Technical data sheet

Spacer clip 733

Art.-Nr. 1362776



Steel bolt material.

St	Steel
G	Electrogalvanised

Master data

Item no.	1362776
Type	ASL 733 36 G
Description 1	Distance saddle
Description 2	with slot
Dimension	30-36mm
Material	Steel
Material symbol	St
Surface	Electrogalvanised
Surface to DIN	DIN EN 12329
Surface symbol	G
Smallest sales unit	20,00 Piece
Weight	3,77 kg/100 pc.

Technical data sheet

Spacer clip 733

Art.-Nr. 1362776

Technical data

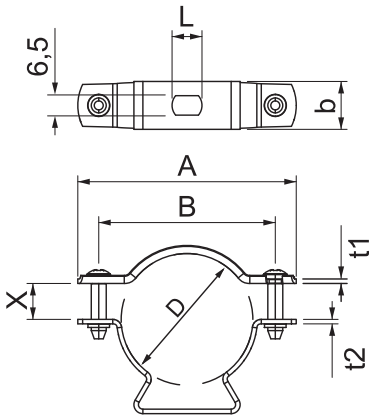

Dimension A	65,00 mm
Dimension B	51,00 mm
Dimension b	16,00 mm
Dimension D	30,00 - 36,00 mm
Dimension D	36,00 mm
Dimension L	10,00 mm
Dimension t1	1,50 mm
Dimension t2	1,50 mm
Dimension x	9,00 mm
Distance to the wall	☑
Number of cables/pipes	1,00
Version	Closed
Fastening type	Screw hole
Halogen-free	☑
Plastic coated	☐
Clamping range D	30,00 - 36,00 mm
UV-resistant	☑