EN Hex key set
PL Zestaw kluczy imbusowych
DE Sechkant-Stiftschlüsselsatz
RU Набор шестигранников
CZ Imbusové klíče
HU Imbisz kulcs
RO Chei imbus
FR Set de clés allen
IT Set di chiavi a brugola
ES Juego de llaves hex
CN 内六角扳手组套

HRC 52-56 | CrV 6150

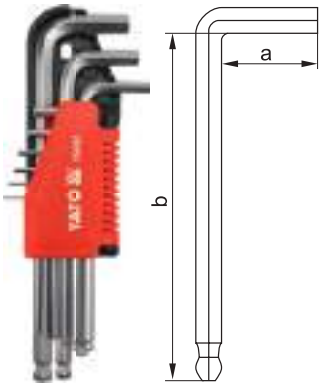

9 PCS | 25°

YATO	◎ [mm]	a [mm]	b [mm]	
YT-0505	1.5, 2, 2.5, 3, 4, 5, 6, 8, 10	15, 16, 18, 21, 23, 28, 31, 35, 39	74, 81, 88, 95, 109, 121, 135, 157, 174	6/36

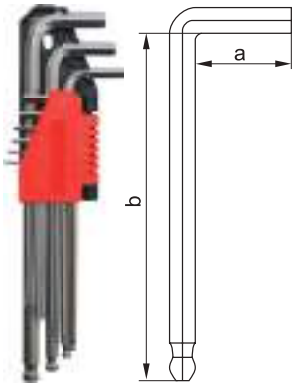

9 PCS

YATO	◎ [mm]	a [mm]	b [mm]	
YT-0506	1.5, 2, 2.5, 3, 4, 5, 6, 8, 10	15, 16, 18, 21, 23, 28, 31, 35, 39	90, 96, 112, 125, 142, 157, 180, 201, 225	6/36

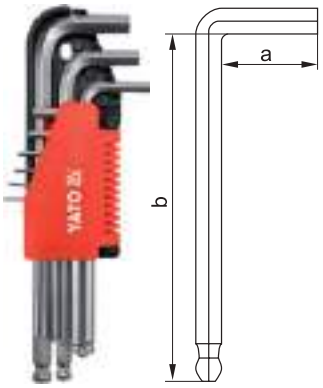

9 PCS

YATO	◎ [mm]	a [mm]	b [mm]	
YT-0507	2, 2.5, 3, 4, 5, 6, 7, 8, 10	16, 18, 21, 23, 28, 31, 33, 35, 39	81, 88, 95, 109, 121, 135, 145, 157, 174	6/36

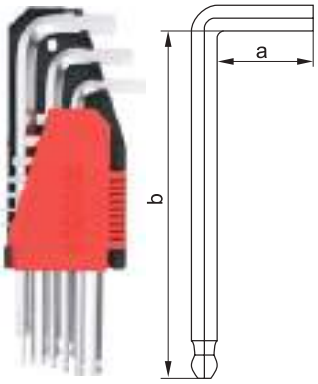

10 PCS

YATO	◎ [mm]	a [mm]	b [mm]	
YT-0509	2, 2.5, 3, 4, 5, 6, 7, 8, 10, 12	16, 18, 21, 23, 28, 31, 33, 35, 39, 42	81, 88, 95, 109, 121, 135, 145, 157, 174, 180	6/36

EN Hex key set
PL Zestaw kluczy imbusowych
DE Sechkant-Stiftschlüsselsatz
RU Набор шестигранников
CZ Imbusové klíče
HU Imbisz kulcs
RO Chei imbus
FR Set de clés allen
IT Set di chiavi a brugola
ES Juego de llaves hex
CN 内六角组套

CrV 6150

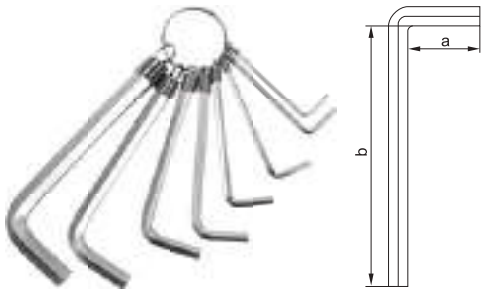

8 PCS

YATO	◎ [mm]	a [mm]	b [mm]	
YT-0503	2, 2.5, 3, 4, 5, 6, 8, 10	14, 16, 17, 21, 22, 27, 32, 38	50, 53, 60, 66, 74, 81, 93, 104	12/72



10 PCS

YATO	◎ [mm]	a [mm]	b [mm]	
YT-0504	1.5, 2, 2.5, 3, 4, 5, 6, 7, 8, 10	12, 14, 16, 17, 21, 22, 27, 31, 32, 38	43, 50, 53, 60, 66, 74, 81, 86, 93, 104	12/72

EN Hex key set
PL Zestaw kluczy imbusowych
DE Sechkant-Stiftschlüsselsatz
RU Набор шестигранников
CZ Imbusové klíče
HU Imbisz kulcs
RO Chei imbus
FR Set de clés Allen
IT Set di chiavi a brugola
ES Juego de llaves Hex
CN 内六角扳手组套

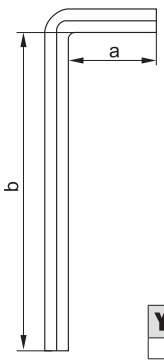



10 PCS | HRC 52-55 | CrV 6150

YATO	◎ [mm]	a [mm]	b [mm]	
YT-0519	3, 4, 5, 5.5, 6, 8, 10, 12, 14, 17	20, 25, 28, 30, 32, 35, 42, 49, 57, 65	125, 140, 160, 170, 180, 200, 220, 250, 285, 320	5