GLX7400S10

TRZPIEŃ DO GLX61, GLX61B, GLX61CB, GLX62, GLX62B, GLX62CB. DŁUGOŚĆ 400MM. □10MM



Wymiary [mm (in)]

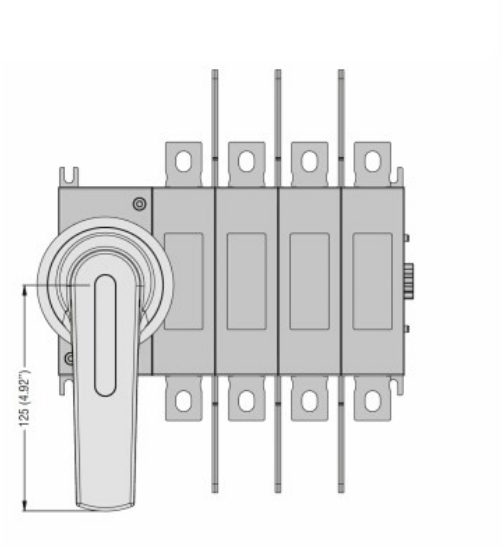

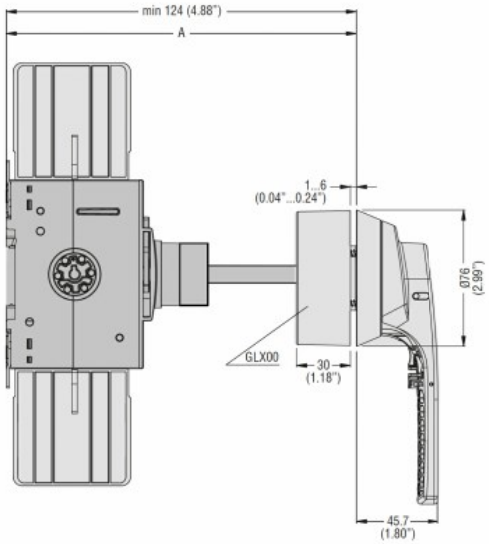

GLX7...S10 with GLC0100...GL0315	A mm (in) min max
GLX7150S10	124...194 (4.88...7.64")
GLX7200S10	124...244 (4.88...9.61")
GLX7300S10	124...344 (4.88...13.54")
GLX7400S10	124...444 (4.88...17.48")
GLX7500S10	124...544 (4.88...21.42")

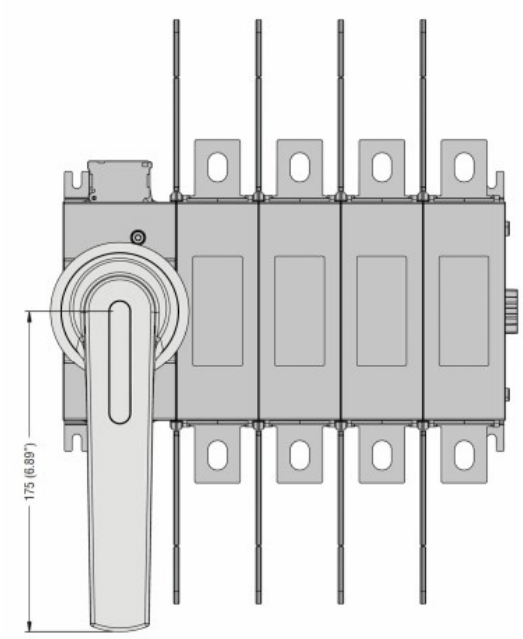

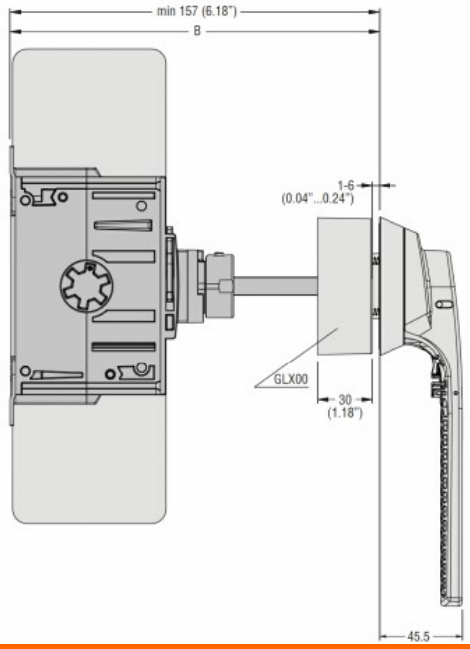

GLX7...S10 with GLC0320...GL0630	B mm (in) min max
GLX7150S10	157...227 (6.18...8.94")
GLX7200S10	157...277 (6.18...10.90")
GLX7300S10	157...377 (6.18...14.84")
GLX7400S10	157...477 (6.18...18.78")
GLX7500S10	157...577 (6.18...22.72")

Certyfikaty i zgodność

Zgodność

IEC/EN 60947-1

IEC/EN 60947-3

Certyfikaty

cULus

Klasyfikacja ETIM

The characteristics described in this document are subject to updates or modifications at any time. The descriptions, technical and functional information, illustrations and instructions in this brochure are purely illustrative, and are consequently not contractually binding

GLX7400S10

TRZPIEŃ DO GLX61, GLX61B, GLX61CB, GLX62, GLX62B, GLX62CB. DŁUGOŚĆ 400MM. □10MM

ETIM 8,0

EC002498 - Akcesoria/części zamienne do aparatury niskonapięciowej

The characteristics described in this document are subject to updates or modifications at any time. The descriptions, technical and functional information, illustrations and instructions in this brochure are purely illustrative, and are consequently not contractually binding