HIRSCHMANN
A BELDEN BRAND

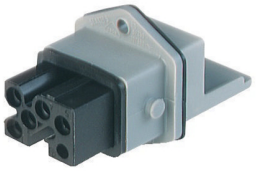

Part Number: STAKEI 5

Rectangular Receptacle Power Connector (ST Series): Female, front mount with flange, 5-pin+PE, grey housing, 400 V AC / 230 V DC, 10 A AC/6 A DC

Product Description

Rectangular Receptacle Power Connector (ST Series): Female, front mount with flange, 5-pin+PE, grey housing, 400 V AC / 230 V DC, 10 A AC/6 A DC

Technical Drawing

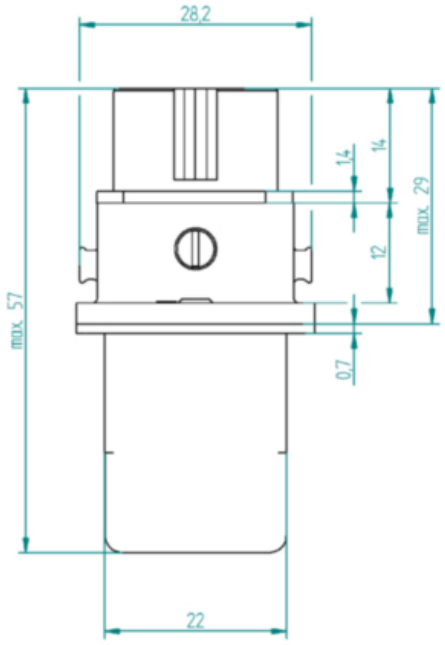

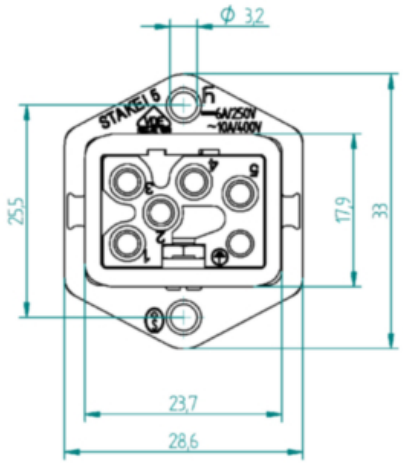

Montageausschnitt/
Panel cutout

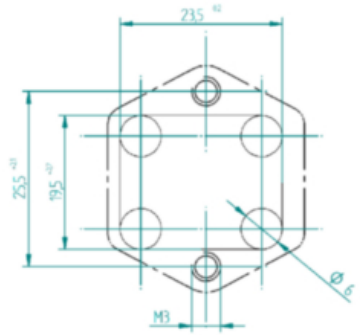

Technical Specifications

Technical Data

Product Family:	Power Connector
Product Sub Family:	ST-Series
Brand:	Hirschmann
Connector Type:	Receptacle
Type of Contact / Gender:	female
Connector Design:	Front Mount with flange
Number of Pins:	5+PE
Shielding:	Unshielded
Attachment Type:	safety bracket
Rated Voltage:	400 V AC / 250 V DC
Rated Impulse Voltage:	2.5 kV
Operating Voltage:	400 V AC / 230 V DC
Rated Current:	10 A AC / 6 A DC
Contact Resistance:	≤ 10 mOhm
Mating Cycles:	max. 50
Type of Connection:	crimp
Conductor Cross Section:	0.25 mm² to 1.00 mm²
Ambient Temperature (Operation):	-30°C to +90°C, notice Derating
Temperature Range (Gasket):	-30°C to +90°C
Protection Degree / IP Rating:	IP54
Design Standard:	DIN EN 61984 (VDE 0627)
Pollution Degree:	3 acc. to DIN EN 60664-1 (VDE 0110-1)
Clearance / Creepage Distance:	DIN EN 60664-1 (2008/01); VDE 0110-1

Materials

Contact Base Material:	CuZn
Contact Plating:	Cu/Ag
Contact Bearer Material:	PA 66 GF
Contact Bearer Color:	black
Flammability Class (Contact Bearer):	UL 94 V-0
Housing Material:	PA 6 GF
Housing Color:	grey
Flammability Class (Housing):	UL 94 HB
Gasket Material:	NBR

Additional Technical Data

Fastening torque (mounting screw):	M 3: (50-60) Ncm, flange
Mounting:	Screw: M3 (2x)
Accessories to Order Separately:	STASI 3, 732-045-…, safety bracket

Approvals

VDE:	VDE 61984
SEV:	SEV

Notes

Protection Degree / IP Rating Note:	* only if mounted and locked in combination with Hirschmann / Lumberg connector.
Note Derating:	* Notice derating
Note:	Do not connect or disconnect under load.

Variants

Item #	Item Description
931694106	STAKEI 5

© 2019 Belden, Inc

All Rights Reserved.

Although Belden makes every reasonable effort to ensure their accuracy at the time of this publication, information and specifications described here in are subject to error or omission and to change without notice, and the listing of such information and specifications does not ensure product availability.

Belden provides the information and specifications herein on an "ASIS" basis, with no representations or warranties, whether express, statutory or implied. In no event will Belden be liable for any damages (including consequential, indirect, incidental, special, punitive, or exemplary damages) whatsoever, even if Belden has been advised of the possibility of such damages, whether in an action under contract, negligence or any other theory, arising out of or in connection with the use, or inability to use, the information or specifications described herein.

All sales of Belden products are subject to Belden's standard terms and conditions of sale.

Belden believes this product to be in compliance with all applicable environmental programs as listed in the data sheet. The information provided is correct to the best of Belden's knowledge, information and belief at the date of its publication. This information is designed only as a general guide for the safe handling, storage, and any other operation of the product itself or the one that it becomes a part of. The Product Disclosure is not to be considered a warranty or quality specification. Regulatory information is for guidance purposes only. Product users are responsible for determining the applicability of legislation and regulations based on their individual usage of the product.