Aluminum Electrolytic Capacitors
Power Long Life Snap-In



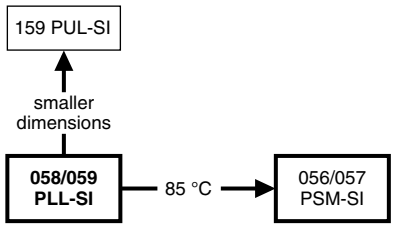

Fig. 1

FEATURES

- Long useful life: 10 000 h at +105 °C
- High ripple current capability
- Keyed polarity version available
- Polarized aluminum electrolytic capacitors, non-solid electrolyte
- Large types, minimized dimensions, cylindrical aluminum case, insulated with a blue sleeve
- Material categorization: for definitions of compliance please see www.vishay.com/doc?99912

Pb-free

RoHS COMPLIANT

APPLICATIONS

- Computer, telecommunication and industrial systems
- Smoothing and filtering applications
- Standard and switched mode power supplies
- Energy storage in pulse systems

MARKING

The capacitors are marked (where possible) with the following information:

- Rated capacitance (in µF)
- Tolerance code on rated capacitance, code letter in accordance with IEC 60062 (M for ± 20 %)
- Rated voltage (in V)
- Date code (YYMM)
- Name of manufacturer
- Code for factory of origin
- "-" sign to identify the negative terminal, visible from the top and side of the capacitor
- Code number
- Climatic category in accordance with IEC 60068

QUICK REFERENCE DATA

DESCRIPTION	VALUE	
	058	059
Nominal case sizes (Ø D x L in mm)	22 x 25 to 35 x 50	
Rated capacitance range (E6 series), C_R	33 µF to 47 000 µF	
Tolerance on C_R	± 20 %	
Rated voltage range, U_R	10 V to 100 V	200 V to 400 V
Category temperature range	-40 °C to 105 °C	-25 °C to 105 °C
Endurance test at 105 °C	≤ 50 V: 2000 h; ≥ 63 V: 5000 h	
Useful life at 105 °C	≤ 50 V: 5000 h; ≥ 63 V: 10 000 h	
Useful life at 40 °C, 1.9 x I_R applied	≤ 50 V: 125 000 h; ≥ 63 V: 250 000 h	
Shelf life at 0 V, 105 °C	500 h	
Max. RMS value of ripple voltage	n/a	12 V
Based on sectional specification	IEC 60384-4 / EN130300	
Climatic category IEC 60068	40 / 105 / 56	25 / 105 / 56

SELECTION CHART FOR C_R, U_R, AND RELEVANT NOMINAL CASE SIZES FOR 058 SERIES (Ø D x L in mm)

C_R (µF)	U_R (V)						
	10	16	25	40	50	63	100
330	-	-	-	-	-	-	22 x 25
470	-	-	-	-	-	-	22 x 30
680	-	-	-	-	-	22 x 25	25 x 30
	-	-	-	-	-	-	22 x 40
1000	-	-	-	-	22 x 25	22 x 30	30 x 30
	-	-	-	-	-	-	25 x 40
1500	-	-	-	22 x 25	22 x 30	25 x 30	30 x 40
	-	-	-	-	-	22 x 40	25 x 50

For technical questions, contact: aluminumcaps2@vishay.com

THIS DOCUMENT IS SUBJECT TO CHANGE WITHOUT NOTICE. THE PRODUCTS DESCRIBED HEREIN AND THIS DOCUMENT ARE SUBJECT TO SPECIFIC DISCLAIMERS, SET FORTH AT www.vishay.com/doc?91000

SELECTION CHART FOR C_R, U_R, AND RELEVANT NOMINAL CASE SIZES FOR 058 SERIES (Ø D x L in mm)							
C_R (µF)	U_R (V)						
	10	16	25	40	50	63	100
2200	-	-	22 x 25	22 x 30	25 x 30	30 x 30	35 x 40
	-	-	-	-	22 x 40	25 x 40	30 x 50
3300	-	22 x 25	22 x 30	25 x 30	30 x 30	30 x 40	35 x 50
	-	-	-	22 x 40	25 x 40	25 x 50	-
4700	22 x 25	22 x 30	25 x 30	30 x 30	30 x 40	35 x 40	-
	-	-	22 x 40	25 x 40	25 x 50	30 x 50	-
6800	22 x 30	25 x 30	30 x 30	30 x 40	35 x 40	35 x 50	-
	-	22 x 40	25 x 40	25 x 50	30 x 50	-	-
10 000	25 x 30	30 x 30	30 x 40	35 x 40	35 x 50	-	-
	22 x 40	25 x 40	25 x 50	30 x 50	-	-	-
15 000	30 x 30	30 x 40	35 x 40	35 x 50	-	-	-
	25 x 40	25 x 50	30 x 50	-	-	-	-
22 000	30 x 40	35 x 40	35 x 50	-	-	-	-
	25 x 50	30 x 50	-	-	-	-	-
33 000	35 x 40	35 x 50	-	-	-	-	-
	30 x 50	-	-	-	-	-	-
47 000	35 x 50	-	-	-	-	-	-

SELECTION CHART FOR C_R, U_R, AND RELEVANT NOMINAL CASE SIZES FOR 059 SERIES (Ø D x L in mm)				
C_R (µF)	U_R (V)			
	200	250	385	400
33	-	-	22 x 25	-
47	-	-	22 x 30	22 x 30
68	-	22 x 25	22 x 35	22 x 35
	-	-	25 x 30	25 x 30
100	22 x 25	22 x 30	30 x 30	30 x 30
	-	-	25 x 40	25 x 40
150	22 x 30	22 x 35	25 x 50	30 x 35
	-	25 x 30	30 x 40	25 x 50
220	22 x 35	30 x 30	35 x 40	35 x 40
	25 x 30	25 x 35	30 x 50	30 x 50
330	30 x 30	30 x 35	35 x 50	35 x 50
	25 x 40	25 x 50	-	-
470	30 x 35	35 x 35	-	-
	25 x 50	30 x 45	-	-
680	35 x 35	35 x 45	-	-
	30 x 45	-	-	-
1000	35 x 50	-	-	-

For technical questions, contact: aluminumcaps2@vishay.com
THIS DOCUMENT IS SUBJECT TO CHANGE WITHOUT NOTICE. THE PRODUCTS DESCRIBED HEREIN AND THIS DOCUMENT ARE SUBJECT TO SPECIFIC DISCLAIMERS, SET FORTH AT www.vishay.com/doc?91000

DIMENSIONS in millimeters AND AVAILABLE FORMS

TWO TERMINAL SNAP-IN

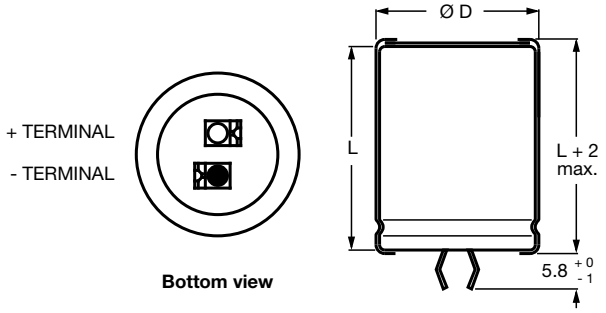

The minus terminal can be marked with a black dot or with an imprinted "-" sign.

Fig. 2 - Two terminal snap-in

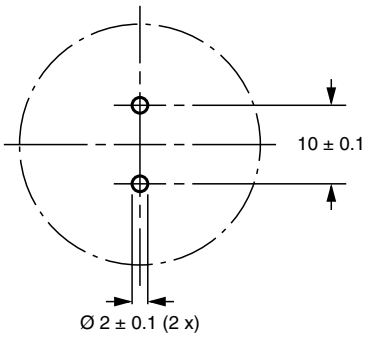

Fig. 3 - Mounting hole diagram

THREE TERMINAL SNAP-IN

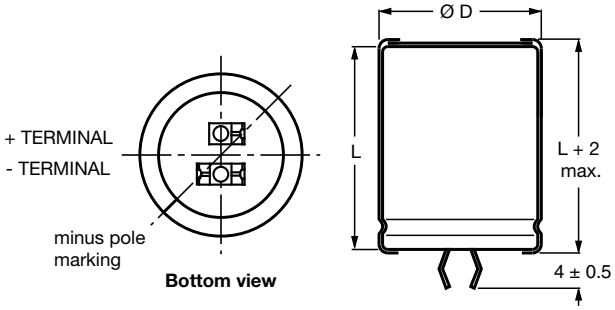

The negative terminal has **TWO** pins which are **BOTH** electrically connected.

Fig. 4 - Three terminal snap-in

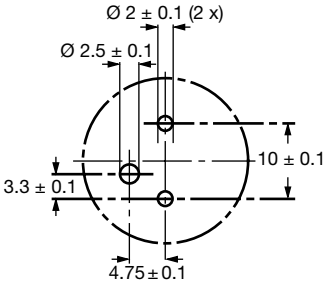

The 10 mm spacing of the 2 pin snap-in is used as the base layout and a third hole is added.

The third hole is closer to the negative primary hole so that polarization is always maintained, together with added mechanical stability.

Fig. 5 - Mounting hole diagram

Table 1

DIMENSIONS in millimeters, MASS AND PACKAGING QUANTITIES					
NOMINAL CASE SIZE Ø D x L	Ø $D_{MAX.}$	$L_{MAX.}$	MASS (g)	PACKAGING QUANTITIES (units per box)	CARDBOARD BOX DIMENSIONS L x W x H
22 x 25	23	27	≈ 12	100	260 x 250 x 39
22 x 30	23	32	≈ 16	100	260 x 250 x 44
22 x 35	23	37	≈ 20	100	260 x 250 x 49
22 x 40	23	42	≈ 23	100	260 x 250 x 54
25 x 30	26	32	≈ 22	100	290 x 280 x 44
25 x 35	26	37	≈ 24	100	290 x 280 x 49
25 x 40	26	42	≈ 27	100	290 x 280 x 54
25 x 50	26	52	≈ 38	100	290 x 280 x 64
30 x 30	31	32	≈ 30	100	340 x 330 x 44
30 x 35	31	37	≈ 35	100	340 x 330 x 49
30 x 40	31	42	≈ 40	100	340 x 330 x 54
30 x 45	31	47	≈ 45	100	340 x 330 x 59
30 x 50	31	52	≈ 50	100	340 x 330 x 64
35 x 35	36	37	≈ 48	50	390 x 198 x 49
35 x 40	36	42	≈ 55	50	390 x 198 x 54
35 x 45	36	47	≈ 63	50	390 x 198 x 59
35 x 50	36	52	≈ 72	50	390 x 198 x 64

For technical questions, contact: aluminumcaps2@vishay.com

THIS DOCUMENT IS SUBJECT TO CHANGE WITHOUT NOTICE. THE PRODUCTS DESCRIBED HEREIN AND THIS DOCUMENT ARE SUBJECT TO SPECIFIC DISCLAIMERS, SET FORTH AT www.vishay.com/doc?91000

ELECTRICAL DATA	
SYMBOL	DESCRIPTION
C_R	Rated capacitance at 100 Hz
I_R	Rated RMS ripple current at 100 Hz or ≥ 10 kHz and 105 °C
I_{L1}	Max. leakage current after 1 min at U_R
I_{L5}	Max. leakage current after 5 min at U_R
ESR	Max. equivalent series resistance at 100 Hz
Z	Max. impedance at 10 kHz

Note

- Unless otherwise specified, all electrical values in Table 2 and 3 apply at T_{amb} = 20 °C, P = 86 kPa to 106 kPa, RH = 45 % to 75 %

ORDERING EXAMPLE

Electrolytic capacitor 058 series

10 000 µF / 25 V; ± 20 %

Nominal case size: Ø 30 mm x 40 mm

2-terminal snap-in:

Ordering code: MAL2 058 56103 E3
Former 12NC: 2222 058 56103

3-terminal snap-in:

Ordering code: MAL2 058 76103 E3
Former 12NC: 2222 058 76103

Table 2

ELECTRICAL DATA AND ORDERING INFORMATION FOR 058 SERIES (Ø D x L in mm)

U_R (V)	C_R 100 Hz (µF)	NOMINAL CASE SIZE Ø D x L (mm)	I_R 100 Hz 105 °C (A)	I_R ≥ 10 kHz 105 °C (A)	I_{L1} 1 min (µA)	I_{L5} 5 min (µA)	ESR 100 Hz (mΩ)	Z 10 kHz (mΩ)	ORDERING CODE MAL2058.....	
									2-TERM.	3-TERM.
10	4700	22 x 25	1.95	2.30	286	98	82	57	54472E3	74472E3
	6800	22 x 30	2.44	2.88	412	140	61	44	54682E3	74682E3
	10 000	25 x 30	2.81	3.32	604	204	54	42	54103E3	74103E3
	10 000	22 x 40	3.29	3.88	604	204	43	32	44103E3	24103E3
	15 000	30 x 30	3.53	4.17	904	304	42	34	54153E3	74153E3
	15 000	25 x 40	3.78	4.46	904	304	38	30	44153E3	24153E3
	22 000	30 x 40	4.62	5.45	1324	444	31	25	54223E3	74223E3
	22 000	25 x 50	4.68	5.52	1324	444	31	24	44223E3	24223E3
	33 000	35 x 40	5.15	6.08	1984	664	30	24	54333E3	74333E3
	33 000	30 x 50	5.70	6.73	1984	664	24	21	44333E3	24333E3
	47 000	35 x 50	6.23	7.35	2824	944	24	21	54473E3	74473E3
16	3300	22 x 25	1.90	2.24	321	110	86	57	55332E3	75332E3
	4700	22 x 30	2.36	2.78	455	154	65	44	55472E3	75472E3
	6800	25 x 30	2.75	3.25	657	222	56	42	55682E3	75682E3
	6800	22 x 40	3.18	3.75	657	222	46	32	45682E3	25682E3
	10 000	30 x 30	3.44	4.06	964	324	44	34	55103E3	75103E3
	10 000	25 x 40	3.66	4.32	964	324	40	30	45103E3	25103E3
	15 000	30 x 40	4.55	5.37	1444	484	32	25	55153E3	75153E3
	15 000	25 x 50	4.55	5.37	1444	484	32	24	45153E3	25153E3
	22 000	35 x 40	5.07	5.98	2116	708	31	24	55223E3	75223E3
	22 000	30 x 50	5.67	6.69	2116	708	25	21	45223E3	25223E3
	33 000	35 x 50	6.23	7.35	3172	1060	25	21	55333E3	75333E3
25	2200	22 x 25	1.76	2.08	334	114	100	57	56222E3	76222E3
	3300	22 x 30	2.23	2.63	499	169	73	44	56332E3	76332E3
	4700	25 x 30	2.60	3.07	709	239	62	42	56472E3	76472E3
	4700	22 x 40	3.00	3.54	709	239	52	32	46472E3	26472E3
	6800	30 x 30	3.26	3.85	1024	344	49	34	56682E3	76682E3
	6800	25 x 40	3.49	4.12	1024	344	44	30	46682E3	26682E3
	10 000	30 x 40	4.37	5.16	1504	504	35	25	56103E3	76103E3
	10 000	25 x 50	4.37	5.16	1504	504	35	24	46103E3	26103E3
	15 000	35 x 40	4.91	5.79	2254	754	33	24	56153E3	76153E3
	15 000	30 x 50	5.43	6.41	2254	754	27	21	46153E3	26153E3
	22 000	35 x 50	6.07	7.16	3304	1104	27	21	56223E3	76223E3
40	1500	22 x 25	1.65	2.01	364	124	114	65	57152E3	77152E3
	2200	22 x 30	2.04	2.49	532	180	87	50	57222E3	77222E3
	3300	25 x 30	2.43	2.99	796	268	71	45	57332E3	77332E3
	3300	22 x 40	2.78	3.39	796	268	60	37	47332E3	27332E3
	4700	30 x 30	2.96	3.61	1132	380	59	40	57472E3	77472E3
	4700	25 x 40	3.26	3.90	1132	380	51	32	47472E3	27472E3
	6800	30 x 40	3.94	4.81	1636	548	42	29	57682E3	77682E3
	6800	25 x 50	4.10	5.00	1636	548	39	26	47682E3	27682E3
	10 000	35 x 40	4.18	5.10	2404	804	46	29	57103E3	77103E3
	10 000	30 x 50	4.98	6.08	2404	804	36	24	47103E3	27103E3
	15 000	35 x 50	5.21	6.36	3604	1204	36	24	57153E3	77153E3

For technical questions, contact: aluminumcaps2@vishay.com
THIS DOCUMENT IS SUBJECT TO CHANGE WITHOUT NOTICE. THE PRODUCTS DESCRIBED HEREIN AND THIS DOCUMENT ARE SUBJECT TO SPECIFIC DISCLAIMERS, SET FORTH AT www.vishay.com/doc?91000

ELECTRICAL DATA AND ORDERING INFORMATION FOR 058 SERIES (Ø D x L in mm)										
U_R (V)	C_R 100 Hz (µF)	NOMINAL CASE SIZE Ø D x L (mm)	I_R 100 Hz 105 °C (A)	I_R ≥ 10 kHz 105 °C (A)	I_{L1} 1 min (µA)	I_{L5} 5 min (µA)	ESR 100 Hz (mΩ)	Z 10 kHz (mΩ)	ORDERING CODE MAL2058.....	
									2-TERM.	3-TERM.
50	1000	22 x 25	1.50	1.83	304	104	138	69	51102E3	71102E3
	1500	22 x 30	1.88	2.29	454	154	102	54	51152E3	71152E3
	2200	25 x 30	2.27	2.77	664	124	82	47	51222E3	71222E3
	2200	22 x 40	2.55	3.11	664	124	71	38	41222E3	21222E3
	3300	30 x 30	2.81	3.43	994	334	66	41	51332E3	71332E3
	3300	25 x 40	3.07	3.75	994	334	57	33	41332E3	21332E3
	4700	30 x 40	3.77	4.60	1414	474	47	30	51472E3	71472E3
	4700	25 x 50	3.85	4.70	1414	474	43	27	41472E3	21472E3
	6800	35 x 40	4.01	4.89	2044	684	49	30	51682E3	71682E3
	6800	30 x 50	4.74	5.78	2044	684	38	24	41682E3	21682E3
	10 000	35 x 50	5.04	6.15	3004	1004	38	24	51103E3	71103E3
63	680	22 x 25	1.17	1.43	261	90	228	150	58681E3	78681E3
	1000	22 x 30	1.46	1.78	382	130	170	115	58102E3	78102E3
	1500	25 x 30	1.76	2.15	571	193	137	85	58152E3	78152E3
	1500	22 x 40	2.00	2.44	571	193	115	85	48152E3	28152E3
	2200	30 x 30	2.27	2.77	836	281	101	70	58222E3	78222E3
	2200	25 x 40	2.40	2.93	836	281	94	70	48222E3	28222E3
	3300	30 x 40	3.07	3.75	1251	420	70	50	58332E3	78332E3
	3300	25 x 50	3.07	3.75	1251	420	70	50	48332E3	28332E3
	4700	35 x 40	3.65	4.45	1781	596	60	45	58472E3	78472E3
	4700	30 x 50	3.88	4.73	1781	596	53	45	48472E3	28472E3
	6800	35 x 50	4.58	5.59	2574	861	46	35	58682E3	78682E3
100	330	22 x 25	0.92	1.12	202	70	370	250	59331E3	79331E3
	470	22 x 30	1.14	1.39	286	98	280	190	59471E3	79471E3
	680	25 x 30	1.35	1.65	412	140	232	140	59681E3	79681E3
	680	22 x 40	1.57	1.92	412	140	190	140	49681E3	29681E3
	1000	30 x 30	1.79	2.40	604	204	163	115	59102E3	79102E3
	1000	25 x 40	1.85	2.26	604	204	158	115	49102E3	29102E3
	1500	30 x 40	2.45	2.99	904	304	111	85	59152E3	79152E3
	1500	25 x 50	2.38	2.90	904	304	116	85	49152E3	29152E3
	2200	35 x 40	3.05	3.72	1324	444	86	65	59222E3	79222E3
	2200	30 x 50	3.13	3.82	1324	444	82	65	49222E3	29222E3
	3300	35 x 50	3.84	4.68	1984	664	64	50	59332E3	79332E3

Table 3

ELECTRICAL DATA AND ORDERING INFORMATION FOR 059 SERIES									
U_R (V)	C_R 100 Hz (µF)	NOMINAL CASE SIZE Ø D x L (mm)	I_R 100 Hz 105 °C (A)	I_{L1} 1 min (µA)	I_{L5} 5 min (µA)	ESR 100 Hz (mΩ)	Z 10 kHz (mΩ)	ORDERING CODE MAL2059.....	
								2-TERM.	3-TERM.
200	100	22 x 25	0.53	124	44	1280	730	52101E3	72101E3
	150	22 x 30	0.67	184	64	850	540	52151E3	72151E3
	220	22 x 35	0.86	268	92	610	430	32221E3	12221E3
	220	25 x 30	0.87	268	92	610	430	52221E3	72221E3
	330	30 x 30	1.12	400	136	435	300	52331E3	72331E3
	330	25 x 40	1.12	400	136	435	300	42331E3	22331E3
	470	30 x 35	1.46	568	192	335	225	32471E3	12471E3
	470	25 x 50	1.25	568	192	335	225	42471E3	22471E3
	680	30 x 45	1.87	820	276	235	155	32681E3	12681E3
	680	35 x 35	1.85	820	276	235	155	62681E3	82681E3
	1000	35 x 50	2.45	1204	404	160	125	52102E3	72102E3
250	68	22 x 25	0.49	106	38	1640	760	53689E3	73689E3
	100	22 x 30	0.62	154	54	1110	570	53101E3	73101E3
	150	22 x 35	0.82	229	79	795	440	33151E3	13151E3
	150	25 x 30	0.82	229	79	795	440	53151E3	73151E3
	220	25 x 35	1.03	334	114	540	300	33221E3	13221E3
	220	30 x 30	1.06	334	114	540	300	53221E3	73221E3
	330	30 x 35	1.43	499	169	385	225	33331E3	13331E3
	330	25 x 50	1.40	499	169	385	225	43331E3	23331E3
	470	30 x 45	1.79	709	239	270	155	33471E3	13471E3
	470	35 x 35	1.79	709	239	270	155	63471E3	83471E3
	680	35 x 45	2.25	1024	344	190	125	43681E3	23681E3

For technical questions, contact: aluminumcaps2@vishay.com
THIS DOCUMENT IS SUBJECT TO CHANGE WITHOUT NOTICE. THE PRODUCTS DESCRIBED HEREIN AND THIS DOCUMENT ARE SUBJECT TO SPECIFIC DISCLAIMERS, SET FORTH AT www.vishay.com/doc?91000

ELECTRICAL DATA AND ORDERING INFORMATION FOR 059 SERIES

U_R (V)	C_R 100 Hz (µF)	NOMINAL CASE SIZE Ø D x L (mm)	I_R 100 Hz 105 °C (A)	I_{L1} 1 min (µA)	I_{L5} 5 min (µA)	ESR 100 Hz (mΩ)	Z 10 kHz (mΩ)	ORDERING CODE MAL2059.....	
								2-TERM.	3-TERM.
385	33	22 x 25	0.32	80	29	3860	3000	58339E3	78339E3
	47	22 x 30	0.41	113	40	2710	2100	58479E3	78479E3
	68	22 x 35	0.53	161	56	1870	1460	38689E3	18689E3
	68	25 x 30	0.52	161	56	1870	1460	58689E3	78689E3
	100	30 x 30	0.72	235	81	1270	1010	58101E3	78101E3
	100	25 x 40	0.72	235	81	1270	1010	48101E3	28101E3
	150	30 x 40	0.99	351	119	850	675	58151E3	78151E3
	150	25 x 50	0.99	351	119	850	675	48151E3	28151E3
	220	35 x 40	1.31	512	173	580	465	58221E3	78221E3
	220	30 x 50	1.31	512	173	580	465	48221E3	28221E3
	330	35 x 50	1.75	766	258	390	320	58331E3	78331E3
400	47	22 x 30	0.30	117	42	4260	3490	56479E3	76479E3
	68	22 x 35	0.38	167	58	2950	2420	36689E3	16689E3
	68	25 x 30	0.41	167	58	2950	2420	56689E3	76689E3
	100	30 x 30	0.55	244	84	2020	1660	56101E3	76101E3
	100	25 x 40	0.55	244	84	2020	1660	46101E3	26101E3
	150	30 x 35	0.68	364	124	1350	1110	36151E3	16151E3
	150	25 x 50	0.78	364	124	1350	1110	46151E3	26151E3
	220	35 x 40	0.94	532	180	930	760	56221E3	76221E3
	220	30 x 50	0.94	532	180	930	760	46221E3	26221E3
	330	35 x 50	1.25	796	260	620	510	56331E3	76331E3

ADDITIONAL ELECTRICAL DATA

PARAMETER	CONDITIONS	VALUE
Voltage		
Surge voltage	≤ 250 V versions	$U_s = 1.15 \times U_R$
	≥ 385 V versions	$U_s = 1.1 \times U_R$
Reverse voltage		$U_{rev} \leq 1$ V
Current		
Leakage current	After 1 min at U_R	$I_{L1} \leq 0.006\ C_R \times U_R + 4$ µA
	After 5 min at U_R	$I_{L5} \leq 0.002\ C_R \times U_R + 4$ µA
Inductance		
Equivalent series inductance (ESL)	All case sizes	Typ. 19 nH
		Max. 25 nH

CAPACITANCE (C)

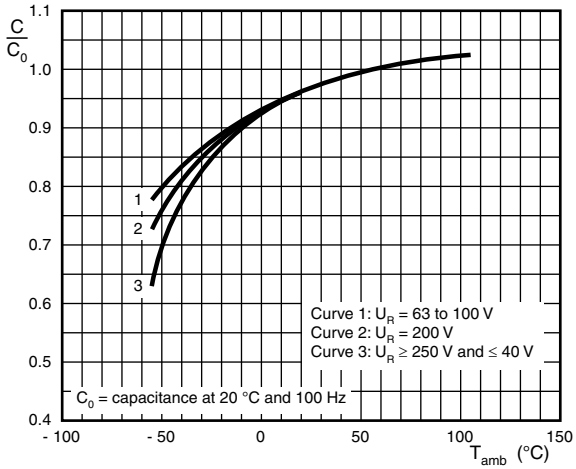

Fig. 6 - Typical multiplier of capacitance as a function of ambient temperature

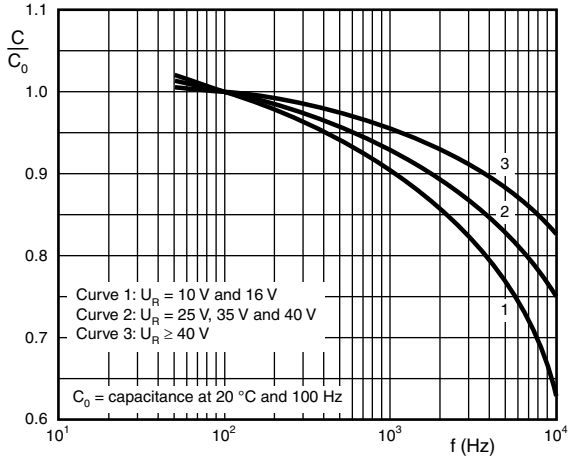

Fig. 7 - Typical multiplier of capacitance as a function of frequency

For technical questions, contact: aluminumcaps2@vishay.com
THIS DOCUMENT IS SUBJECT TO CHANGE WITHOUT NOTICE. THE PRODUCTS DESCRIBED HEREIN AND THIS DOCUMENT ARE SUBJECT TO SPECIFIC DISCLAIMERS, SET FORTH AT www.vishay.com/doc?91000

EQUIVALENT SERIES RESISTANCE (ESR)

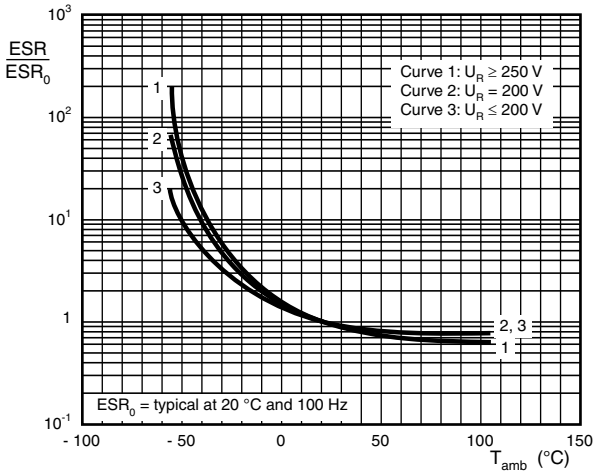

Fig. 8 - Typical multiplier of ESR as a function of ambient temperature

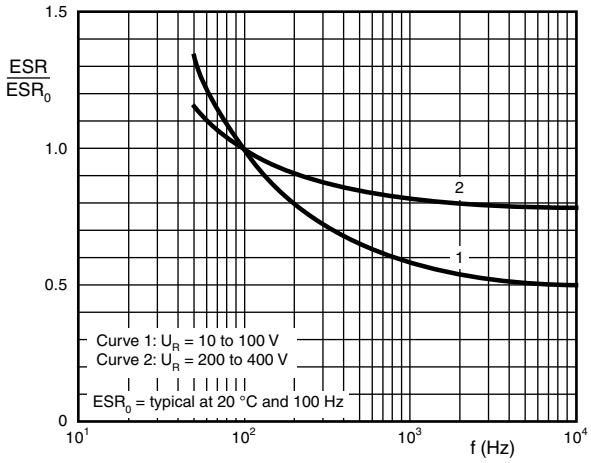

Fig. 9 - Typical multiplier of ESR as a function of frequency

IMPEDANCE (Z)

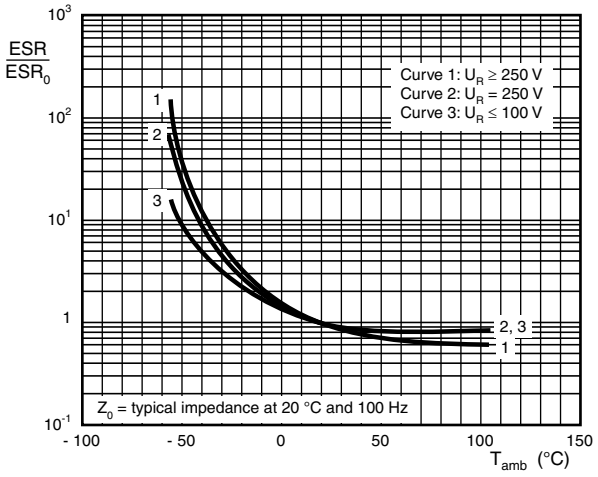

Fig. 10 - Typical multiplier of impedance as a function of ambient temperature

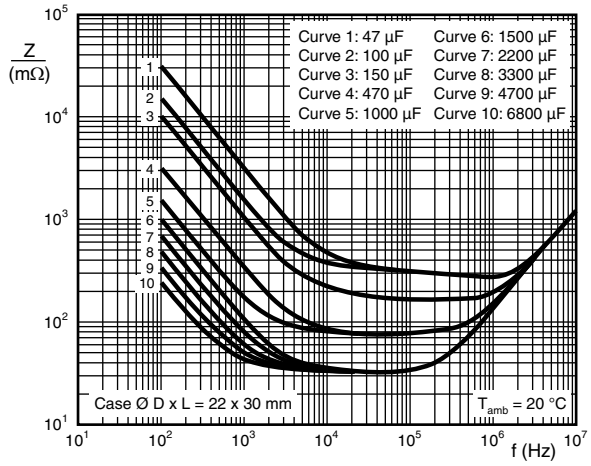

Fig. 12 - Typical impedance as a function of frequency

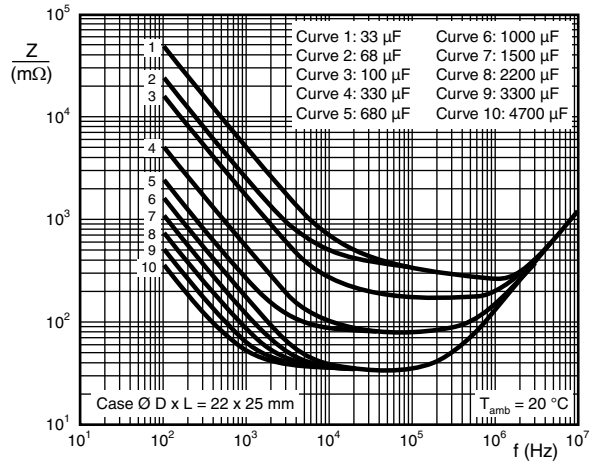

Fig. 11 - Typical impedance as a function of frequency

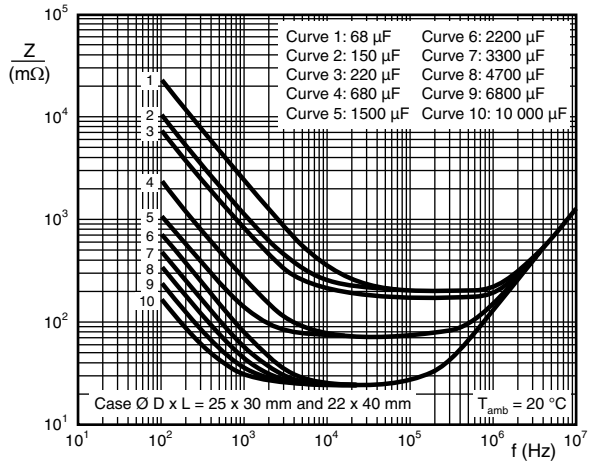

Fig. 13 - Typical impedance as a function of frequency

For technical questions, contact: aluminumcaps2@vishay.com

THIS DOCUMENT IS SUBJECT TO CHANGE WITHOUT NOTICE. THE PRODUCTS DESCRIBED HEREIN AND THIS DOCUMENT ARE SUBJECT TO SPECIFIC DISCLAIMERS, SET FORTH AT www.vishay.com/doc?91000

IMPEDANCE (Z)

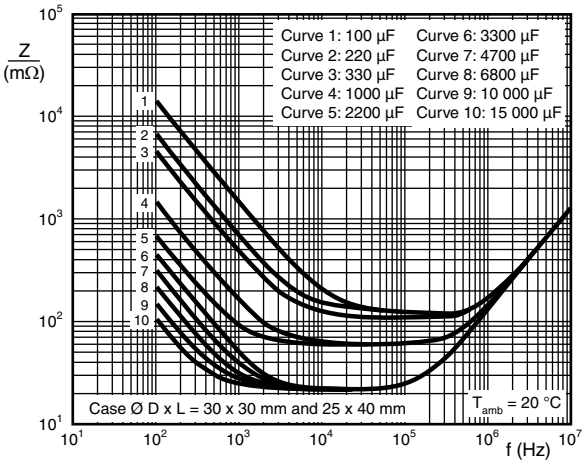

Fig. 14 - Typical impedance as a function of frequency

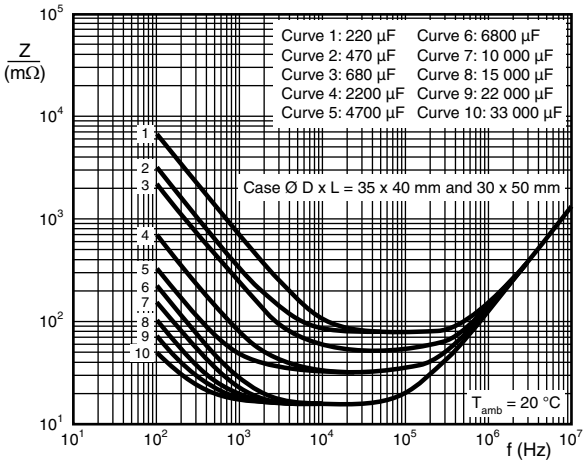

Fig. 16 - Typical impedance as a function of frequency

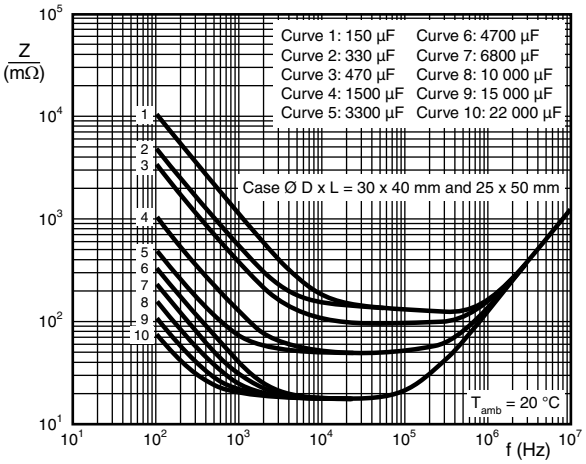

Fig. 15 - Typical impedance as a function of frequency

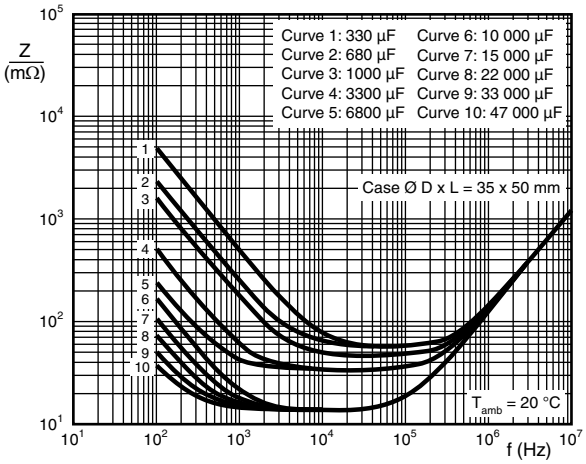

Fig. 17 - Typical impedance as a function of frequency

RIPPLE CURRENT AND USEFUL LIFE

Table 4

ENDURANCE TEST DURATION AND USEFUL LIFE		
U_R (V)	ENDURANCE AT 105 °C (h)	USEFUL LIFE AT 105 °C (h)
10	2000	5000
16	2000	5000
25	2000	5000
40	2000	5000
50	2000	5000
63	5000	10 000
100	5000	10 000
200	5000	10 000
250	5000	10 000
385	5000	10 000
400	5000	10 000

Note

- Multiplier of useful life code: MGA454

For technical questions, contact: aluminumcaps2@vishay.com

THIS DOCUMENT IS SUBJECT TO CHANGE WITHOUT NOTICE. THE PRODUCTS DESCRIBED HEREIN AND THIS DOCUMENT ARE SUBJECT TO SPECIFIC DISCLAIMERS, SET FORTH AT www.vishay.com/doc?91000

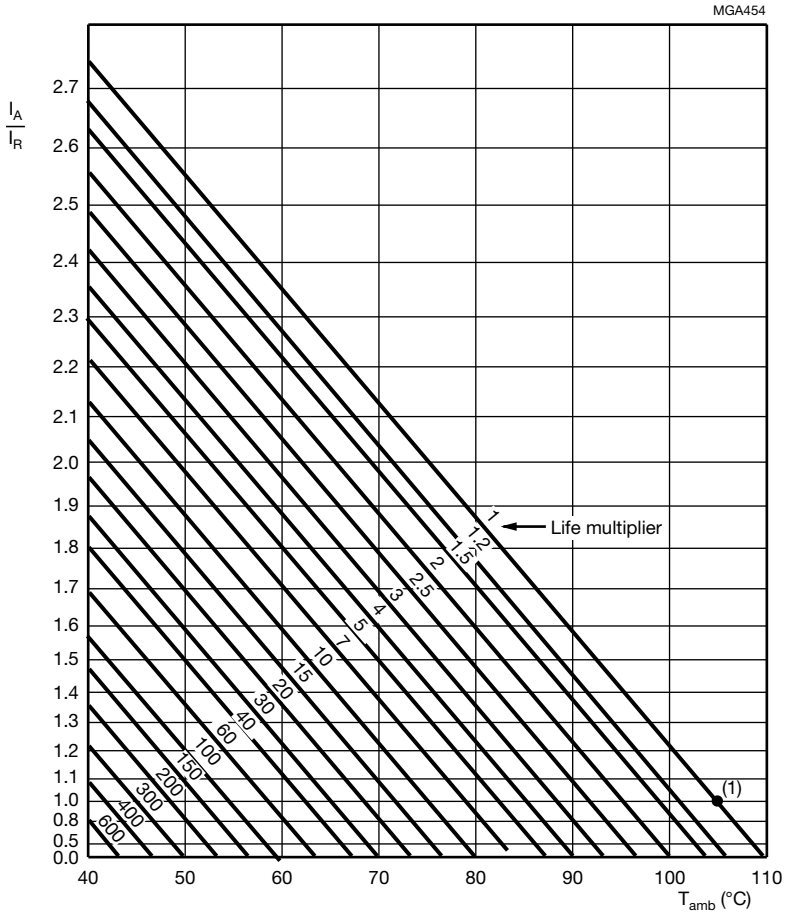

I_A = Actual ripple current at 100 Hz
I_R = Rated ripple current at 100 Hz and 105 °C

(1) Useful life at 105 °C and I_R applied:
5000 h for ≤ 50 V types
10 000 h for ≥ 63 V types

Fig. 18 - Multiplier of useful life as a function of ambient temperature and ripple current load

Table 5

MULTIPLIER OF RIPPLE CURRENT (I_R) AS A FUNCTION OF FREQUENCY								
U_R (V)	FREQUENCY (Hz)							
	50	100	200	400	1000	2000	4000	≥ 10 000
	I_R MULTIPLIER							
10	0.93	1.00	1.04	1.07	1.11	1.13	1.15	1.18
16	0.93	1.00	1.04	1.07	1.11	1.13	1.15	1.18
25	0.93	1.00	1.04	1.07	1.11	1.13	1.15	1.18
40	0.91	1.00	1.05	1.09	1.13	1.15	1.18	1.22
50	0.91	1.00	1.05	1.09	1.13	1.15	1.18	1.22
63	0.91	1.00	1.05	1.09	1.13	1.15	1.18	1.22
100	0.91	1.00	1.05	1.09	1.13	1.15	1.18	1.22
200	0.86	1.00	1.13	1.21	1.29	1.32	1.35	1.40
250	0.86	1.00	1.13	1.21	1.29	1.32	1.35	1.40
385	0.86	1.00	1.13	1.21	1.29	1.32	1.35	1.40
400	0.86	1.00	1.13	1.21	1.29	1.32	1.35	1.40

For technical questions, contact: aluminumcaps2@vishay.com
THIS DOCUMENT IS SUBJECT TO CHANGE WITHOUT NOTICE. THE PRODUCTS DESCRIBED HEREIN AND THIS DOCUMENT ARE SUBJECT TO SPECIFIC DISCLAIMERS, SET FORTH AT www.vishay.com/doc?91000

Table 6

TEST PROCEDURES AND REQUIREMENTS			
TEST		**PROCEDURE (quick reference)**	**REQUIREMENTS**
NAME OF TEST	**REFERENCE**		
Endurance	IEC 60384-4 / EN 130300 subclause 4.13	T_{amb} = 105 °C; U_R applied; ≤ 50 V types: 2000 h; ≥ 63 V types: 5000 h	$U_R \leq 100$ V; ΔC/C: ± 15 % $U_R > 100$ V; ΔC/C: ± 10 % ESR ≤ 1.3 x spec. limit Z ≤ 2 x spec. limit I_{L5} ≤ spec. limit
Useful life	CECC 30301 subclause 1.8.1	T_{amb} = 105 °C; U_R and I_R applied; ≤ 50 V types: 5000 h; ≥ 63 V types: 10 000 h	$U_R \leq 100$ V; ΔC/C: ± 45 % $U_R > 100$ V; ΔC/C: ± 30 % ESR ≤ 3 x spec. limit Z ≤ 3 x spec. limit I_{L5} ≤ spec. limit no short or open circuit, no visible damage total failure percentage; $U_R > 100$ V: ≤ 3 %
Shelf life (storage at high temperature)	IEC 60384-4 / EN 130300 subclause 4.17	T_{amb} = 105 °C; no voltage applied; 500 h After test: U_R to be applied for 30 min 24 h to 48 h before measurement	ΔC/C: ± 10 % ESR ≤ 1.2 x spec. limit I_{L5} ≤ 2 x spec. limit

Statements about product lifetime are based on calculations and internal testing. They should only be interpreted as estimations. Also due to external factors, the lifetime in the field application may deviate from the calculated lifetime. In general, nothing stated herein shall be construed as a guarantee of durability.

For technical questions, contact: aluminumcaps2@vishay.com
THIS DOCUMENT IS SUBJECT TO CHANGE WITHOUT NOTICE. THE PRODUCTS DESCRIBED HEREIN AND THIS DOCUMENT ARE SUBJECT TO SPECIFIC DISCLAIMERS, SET FORTH AT www.vishay.com/doc?91000

Disclaimer

ALL PRODUCT, PRODUCT SPECIFICATIONS AND DATA ARE SUBJECT TO CHANGE WITHOUT NOTICE TO IMPROVE RELIABILITY, FUNCTION OR DESIGN OR OTHERWISE.

Vishay Intertechnology, Inc., its affiliates, agents, and employees, and all persons acting on its or their behalf (collectively, “Vishay”), disclaim any and all liability for any errors, inaccuracies or incompleteness contained in any datasheet or in any other disclosure relating to any product.

Vishay makes no warranty, representation or guarantee regarding the suitability of the products for any particular purpose or the continuing production of any product. To the maximum extent permitted by applicable law, Vishay disclaims (i) any and all liability arising out of the application or use of any product, (ii) any and all liability, including without limitation special, consequential or incidental damages, and (iii) any and all implied warranties, including warranties of fitness for particular purpose, non-infringement and merchantability.

Statements regarding the suitability of products for certain types of applications are based on Vishay's knowledge of typical requirements that are often placed on Vishay products in generic applications. Such statements are not binding statements about the suitability of products for a particular application. It is the customer's responsibility to validate that a particular product with the properties described in the product specification is suitable for use in a particular application. Parameters provided in datasheets and / or specifications may vary in different applications and performance may vary over time. All operating parameters, including typical parameters, must be validated for each customer application by the customer's technical experts. Product specifications do not expand or otherwise modify Vishay's terms and conditions of purchase, including but not limited to the warranty expressed therein.

Hyperlinks included in this datasheet may direct users to third-party websites. These links are provided as a convenience and for informational purposes only. Inclusion of these hyperlinks does not constitute an endorsement or an approval by Vishay of any of the products, services or opinions of the corporation, organization or individual associated with the third-party website. Vishay disclaims any and all liability and bears no responsibility for the accuracy, legality or content of the third-party website or for that of subsequent links.

Except as expressly indicated in writing, Vishay products are not designed for use in medical, life-saving, or life-sustaining applications or for any other application in which the failure of the Vishay product could result in personal injury or death. Customers using or selling Vishay products not expressly indicated for use in such applications do so at their own risk. Please contact authorized Vishay personnel to obtain written terms and conditions regarding products designed for such applications.

No license, express or implied, by estoppel or otherwise, to any intellectual property rights is granted by this document or by any conduct of Vishay. Product names and markings noted herein may be trademarks of their respective owners.

© 2024 VISHAY INTERTECHNOLOGY, INC. ALL RIGHTS RESERVED