Aluminum Electrolytic Capacitors
Power Economic Printed Wiring



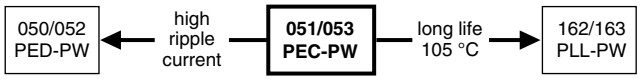

Fig. 1

FEATURES

- Polarized aluminum electrolytic capacitors, non-solid electrolyte
- Large types with reduced dimensions, cylindrical aluminum case, insulated with a blue sleeve
- Provided with keyed polarity
- Long useful life: 12 000 h at 85 °C
- High ripple current capability
- High resistance to shock and vibration
- Material categorization: for definitions of compliance please see www.vishay.com/doc?99912

Pb-free

RoHS COMPLIANT

APPLICATIONS

- General purpose, industrial, medical and audio / video systems
- Standard and switched mode power supplies
- Energy storage in pulse systems

MARKING

The capacitors are marked (where possible) with the following information:

- Rated capacitance (in µF)
- Tolerance on rated capacitance, code letter in accordance with IEC 60062 (M for ± 20 %)
- Rated voltage (in V)
- Date code (YYMM)
- Name of manufacturer
- Code for factory of origin
- Polarity of the terminals and "-" sign to indicate the negative terminal, visible from the top and / or side of the capacitor
- Code number
- Climatic category in accordance with IEC 60068

QUICK REFERENCE DATA

DESCRIPTION	VALUE	
	051	053
Nominal case size (Ø D x L in mm)	25 x 30 to 40 x 100	
Rated capacitance range (E6 series), C_R	680 µF to 150 000 µF	68 µF to 2200 µF
Tolerance on C_R	± 20 %	
Rated voltage range, U_R	10 V to 100 V	200 V to 400 V
Category temperature range	-40 °C to +85 °C	
Endurance test at 85 °C	5000 h	
Useful life at 85 °C	12 000 h	
Useful life at 40 °C, 1.4 x I_R applied	200 000 h	
Shelf life at 0 V, 85 °C	500 h	
Based on sectional specification	IEC 60384-4 / EN130300	
Climatic category IEC 60068	40 / 085 / 56	

SELECTION CHART FOR C_R, U_R, AND RELEVANT NOMINAL CASE SIZES (Ø D x L in mm)

C_R (µF)	U_R (V)								
	10	16	25	40	63	100	200	385	400
68	-	-	-	-	-	-	-	25 x 30	25 x 30
100	-	-	-	-	-	-	-	25 x 40	25 x 40
150	-	-	-	-	-	-	25 x 30	30 x 40	30 x 40
220	-	-	-	-	-	-	25 x 40	35 x 40	35 x 40
330	-	-	-	-	-	-	30 x 40	35 x 50	35 x 50
	-	-	-	-	-	-	-	40 x 40	40 x 40
470	-	-	-	-	-	-	35 x 40	40 x 50	40 x 50
680	-	-	-	-	-	25 x 30	35 x 50	40 x 70	40 x 70
	-	-	-	-	-	-	40 x 40	-	-
1000	-	-	-	-	-	25 x 40	40 x 50	40 x 100	40 x 100
1500	-	-	-	-	-	30 x 40	40 x 70	-	-
2200	-	-	-	-	25 x 30	35 x 40	40 x 100	-	-
3300	-	-	-	25 x 30	25 x 40	35 x 50	-	-	-
	-	-	-	-	-	40 x 40	-	-	-
4700	-	-	25 x 30	25 x 40	30 x 40	40 x 50	-	-	-

For technical questions, contact: aluminumcaps2@vishay.com

THIS DOCUMENT IS SUBJECT TO CHANGE WITHOUT NOTICE. THE PRODUCTS DESCRIBED HEREIN AND THIS DOCUMENT ARE SUBJECT TO SPECIFIC DISCLAIMERS, SET FORTH AT www.vishay.com/doc?91000

SELECTION CHART FOR C_R, U_R, AND RELEVANT NOMINAL CASE SIZES (Ø D x L in mm)									
C_R (µF)	U_R (V)								
	10	16	25	40	63	100	200	385	400
6800	-	25 x 30	25 x 40	30 x 40	35 x 40	40 x 70	-	-	-
10 000	25 x 30	25 x 40	30 x 40	35 x 40	35 x 50	40 x 100	-	-	-
	-	-	-	-	40 x 40	-	-	-	-
15 000	25 x 40	30 x 40	35 x 40	35 x 50	40 x 70	-	-	-	-
	-	-	-	40 x 40	-	-	-	-	-
22 000	30 x 40	35 x 40	35 x 50	40 x 50	40 x 100	-	-	-	-
	-	-	40 x 40	-	-	-	-	-	-
33 000	35 x 40	35 x 50	40 x 50	40 x 70	-	-	-	-	-
	-	40 x 40	-	-	-	-	-	-	-
47 000	35 x 50	40 x 50	40 x 70	40 x 100	-	-	-	-	-
	40 x 40	-	-	-	-	-	-	-	-
68 000	40 x 50	40 x 70	40 x 100	-	-	-	-	-	-
100 000	40 x 70	40 x 100	-	-	-	-	-	-	-
150 000	40 x 100	-	-	-	-	-	-	-	-

DIMENSIONS in millimeters AND AVAILABLE FORMS

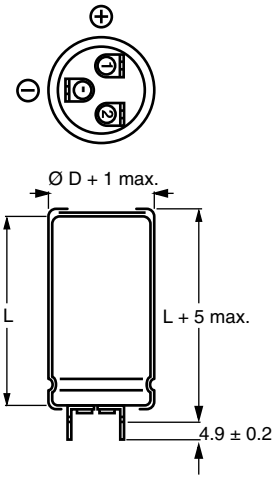

Fig. 2 - Printed wiring pin version
(case Ø D = 25 mm)

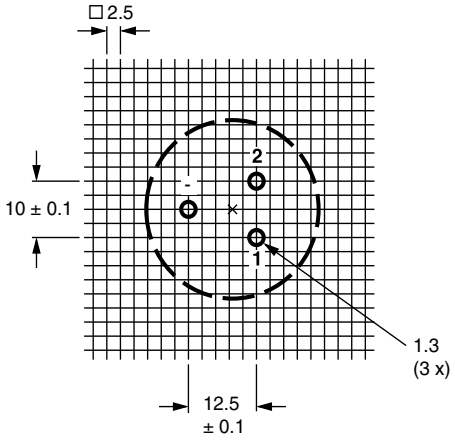

Fig. 3 - Mounting hole diagram viewed from component side
(case Ø D = 25 mm)

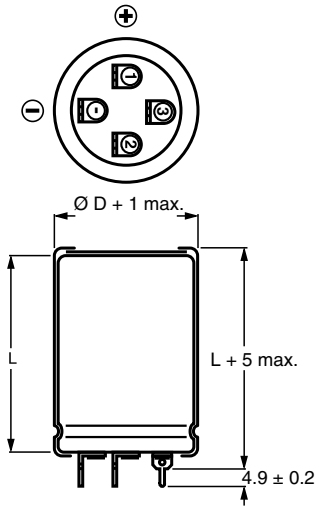

Fig. 4 - Printed wiring pin version
(case Ø D = 30 mm)

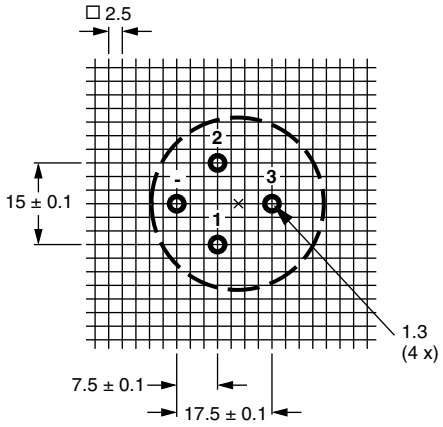

Fig. 5 - Mounting hole diagram viewed from component side
(case Ø D = 30 mm)

For technical questions, contact: aluminumcaps2@vishay.com

THIS DOCUMENT IS SUBJECT TO CHANGE WITHOUT NOTICE. THE PRODUCTS DESCRIBED HEREIN AND THIS DOCUMENT ARE SUBJECT TO SPECIFIC DISCLAIMERS, SET FORTH AT www.vishay.com/doc?91000

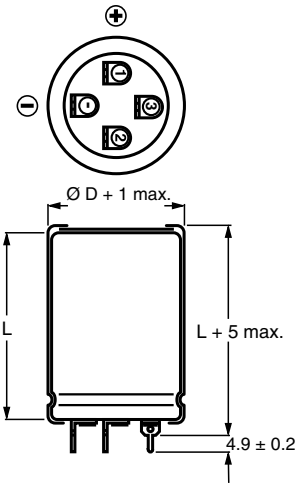

Fig. 6 - Printed wiring pin version
(case Ø D = 35 mm)

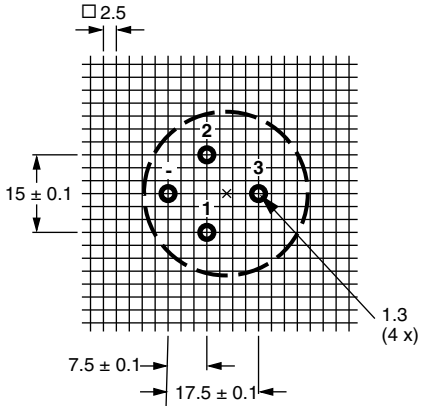

Fig. 7 - Mounting hole diagram viewed from component side
(case Ø D = 35 mm)

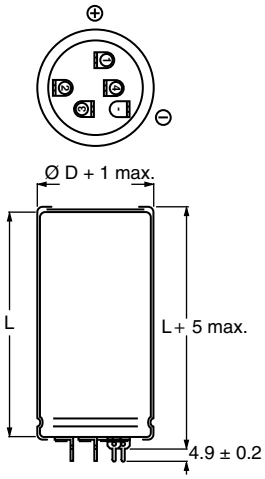

Fig. 8 - Printed wiring pin version
(case Ø D = 40 mm)

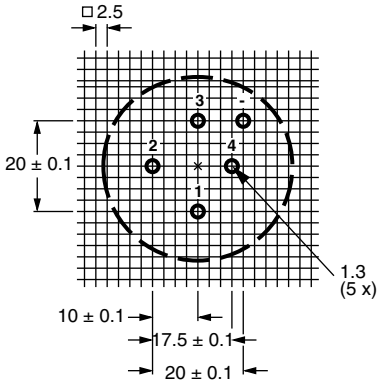

Fig. 9 - Mounting hole diagram viewed from component side
(case Ø D = 40 mm)

MOUNTING

When a number of capacitors are connected in a bank, they must not be closer together than 15 mm, when no derating of ripple current and / or temperature is applied.

Pin number 1 is the positive terminal. Pin "-" is the negative terminal.
Pin numbers 2, 3 and 4 (if present) should be free from the electrical circuit or connected to the minus terminal.

Table 1

DIMENSIONS in millimeters, **MASS, AND PACKAGING QUANTITIES**					
NOMINAL CASE SIZE Ø D x L	**Ø $D_{max.}$**	**$L_{max.}$**	**MASS (g)**	**PACKAGING QUANTITIES (units per box)**	**CARDBOARD BOX DIMENSIONS L x W x H**
25 x 30	26	35	≈ 24	100	290 x 280 x 50
25 x 40	26	45	≈ 28	100	290 x 280 x 60
30 x 40	31	45	≈ 38	100	340 x 330 x 60
35 x 40	36	45	≈ 51	50	390 x 198 x 60
35 x 50	36	55	≈ 66	50	390 x 198 x 70
40 x 40	41	45	≈ 78	50	440 x 223 x 60
40 x 50	41	55	≈ 82	50	440 x 223 x 70
40 x 70	41	75	≈ 110	25	230 x 230 x 90
40 x 100	41	105	≈ 176	25	230 x 230 x 120

For technical questions, contact: aluminumcaps2@vishay.com

THIS DOCUMENT IS SUBJECT TO CHANGE WITHOUT NOTICE. THE PRODUCTS DESCRIBED HEREIN AND THIS DOCUMENT ARE SUBJECT TO SPECIFIC DISCLAIMERS, SET FORTH AT www.vishay.com/doc?91000

ELECTRICAL DATA	
SYMBOL	DESCRIPTION
C_R	Rated capacitance at 100 Hz
I_R	Rated RMS ripple current at 100 Hz, 85 °C or at 20 kHz, 70 °C
I_{L1}	Max. leakage current after 1 min at U_R
I_{L5}	Max. leakage current after 5 min at U_R
ESR	Max. equivalent series resistance at 100 Hz
Z	Max. impedance at 10 kHz

Note

- Unless otherwise specified, all electrical values in tables 2 and 3 apply at T_{amb} = 20 °C, P = 86 kPa to 106 kPa, RH = 45 % to 75 %

ORDERING EXAMPLE

Electrolytic capacitor 051 series
10 000 µF / 25 V; ± 20 %

Nominal case size: Ø 30 mm x 40 mm

Ordering code: MAL2 051 56103 E3
Former 12NC: 2222 051 56103

Table 2

ELECTRICAL DATA AND ORDERING INFORMATION 051 SERIES

U_R (V)	C_R 100 Hz (µF)	NOMINAL CASE SIZE Ø D x L (mm)	I_R 100 Hz 85 °C (A)	I_R 20 kHz 70 °C (A)	I_{L1} 1 min (mA)	I_{L5} 5 min (mA)	ESR 100 Hz (mΩ)	Z 10 kHz (mΩ)	ORDERING CODE MAL2051.....
10	10 000	25 x 30	3.1	5.9	0.60	0.20	51	40	54103E3
	15 000	25 x 40	4.1	7.8	0.90	0.30	37	30	54153E3
	22 000	30 x 40	5.0	9.5	1.32	0.44	30	25	54223E3
	33 000	35 x 40	5.5	10.4	1.98	0.66	28	24	54333E3
	47 000	35 x 50	6.8	12.9	2.82	0.94	23	20	54473E3
	47 000	40 x 40	5.8	10.4	2.82	0.94	29	22	44473E3
	68 000	40 x 50	7.1	13.5	4.08	1.36	24	20	54683E3
	100 000	40 x 70	9.2	17.4	6.00	2.00	19	16	54104E3
	150 000	40 x 100	12.0	22.7	9.00	3.00	16	14	54154E3
16	6800	25 x 30	3.1	5.9	0.65	0.22	53	42	55682E3
	10 000	25 x 40	4.0	7.6	0.96	0.32	39	34	55103E3
	15 000	30 x 40	5.0	9.5	1.44	0.48	31	27	55153E3
	22 000	35 x 40	5.5	10.4	2.12	0.71	29	26	55223E3
	33 000	35 x 50	6.7	12.7	3.17	1.06	23	21	55333E3
	33 000	40 x 40	5.7	10.8	3.17	1.06	30	24	45333E3
	47 000	40 x 50	7.0	13.3	4.52	1.51	24	20	55473E3
	68 000	40 x 70	9.2	17.4	6.53	2.18	19	16	55683E3
	100 000	40 x 100	12.0	22.7	9.60	3.20	16	14	55104E3
25	4700	25 x 30	2.9	5.5	0.71	0.24	60	42	56472E3
	6800	25 x 40	3.9	7.4	1.02	0.34	42	34	56682E3
	10 000	30 x 40	4.8	9.1	1.50	0.50	34	27	56103E3
	15 000	35 x 40	5.3	10.0	2.25	0.75	30	26	56153E3
	22 000	35 x 50	6.5	12.3	3.30	1.10	24	21	56223E3
	22 000	40 x 40	5.7	10.8	3.30	1.10	31	24	46223E3
	33 000	40 x 50	7.0	13.3	4.95	1.65	25	20	56333E3
	47 000	40 x 70	9.2	17.4	7.05	2.35	19	16	56473E3
	68 000	40 x 100	12.0	22.7	10.20	3.40	16	14	56683E3
40	3300	25 x 30	2.9	5.5	0.80	0.27	87	63	57332E3
	4700	25 x 40	3.8	7.2	1.13	0.38	62	47	57472E3
	6800	30 x 40	4.7	8.9	1.64	0.55	49	38	57682E3
	10 000	35 x 40	5.2	9.8	2.40	0.80	48	37	57103E3
	15 000	35 x 50	6.3	11.9	3.60	1.20	37	28	57153E3
	15 000	40 x 40	5.6	10.6	3.60	1.20	50	35	47153E3
	22 000	40 x 50	5.8	11.0	5.28	1.76	39	28	57223E3
	33 000	40 x 70	7.8	14.8	7.92	2.64	28	21	57333E3
	47 000	40 x 100	10.4	19.7	11.28	3.76	22	17	57473E3

For technical questions, contact: aluminumcaps2@vishay.com
THIS DOCUMENT IS SUBJECT TO CHANGE WITHOUT NOTICE. THE PRODUCTS DESCRIBED HEREIN AND THIS DOCUMENT ARE SUBJECT TO SPECIFIC DISCLAIMERS, SET FORTH AT www.vishay.com/doc?91000

ELECTRICAL DATA AND ORDERING INFORMATION 051 SERIES									
U_R (V)	C_R 100 Hz (µF)	NOMINAL CASE SIZE Ø D x L (mm)	I_R 100 Hz 85 °C (A)	I_R 20 kHz 70 °C (A)	I_{L1} 1 min (mA)	I_{L5} 5 min (mA)	ESR 100 Hz (mΩ)	Z 10 kHz (mΩ)	ORDERING CODE MAL2051.....
63	2200	25 x 30	2.5	4.7	0.84	0.28	83	62	58222E3
	3300	25 x 40	3.3	6.2	1.25	0.42	58	42	58332E3
	4700	30 x 40	4.1	7.8	1.78	0.60	49	38	58472E3
	6800	35 x 40	4.5	8.5	2.57	0.86	48	37	58682E3
	10 000	35 x 50	5.4	10.2	3.78	1.26	37	28	58103E3
	10 000	40 x 40	4.6	8.7	3.78	1.26	52	37	48103E3
	15 000	40 x 70	7.5	14.2	5.67	1.89	29	24	58153E3
	22 000	40 x 100	10.0	19.0	8.32	2.77	22	19	58223E3
100	680	25 x 30	1.74	3.30	0.41	0.14	190	130	59681E3
	1000	25 x 40	2.34	4.44	0.60	0.20	130	90	59102E3
	1500	30 x 40	2.95	5.59	0.90	0.30	95	67	59152E3
	2200	35 x 40	3.69	7.00	1.32	0.44	71	53	59222E3
	3300	35 x 50	4.37	8.29	1.98	0.66	55	41	59332E3
	3300	40 x 40	4.16	7.89	1.98	0.66	64	48	49332E3
	4700	40 x 50	5.21	9.88	2.82	0.94	49	38	59472E3
	6800	40 x 70	6.97	13.22	4.08	1.36	35	28	59682E3
	10 000	40 x 100	9.50	18.00	6.00	2.00	26	21	59103E3

Table 3

ELECTRICAL DATA AND ORDERING INFORMATION 053 SERIES									
U_R (V)	C_R 100 Hz (µF)	NOMINAL CASE SIZE Ø D x L (mm)	I_R 100 Hz 85 °C (A)	I_R 20 kHz 70 °C (A)	I_{L1} 1 min (mA)	I_{L5} 5 min (mA)	ESR 100 Hz (mΩ)	Z 10 kHz (mΩ)	ORDERING CODE MAL2053.....
200	150	25 x 30	0.70	1.33	0.18	0.06	1000	770	52151E3
	220	25 x 40	0.94	1.78	0.26	0.09	680	525	52221E3
	330	30 x 40	1.27	2.41	0.40	0.14	460	360	52331E3
	470	35 x 40	1.66	3.15	0.57	0.19	320	250	52471E3
	680	35 x 50	2.19	4.15	0.82	0.28	220	170	52681E3
	680	40 x 40	2.17	4.11	0.82	0.28	220	170	42681E3
	1000	40 x 50	2.86	5.42	1.20	0.40	150	115	52102E3
	1500	40 x 70	3.81	7.22	1.80	0.60	110	85	52152E3
	2200	40 x 100	5.20	9.86	2.64	0.88	80	60	52222E3
385	68	25 x 30	0.47	0.89	0.16	0.06	2200	1480	58689E3
	100	25 x 40	0.64	1.21	0.23	0.08	1500	1020	58101E3
	150	30 x 40	0.90	1.71	0.35	0.12	1000	700	58151E3
	220	35 x 40	1.15	2.18	0.51	0.17	680	480	58221E3
	330	35 x 50	1.53	2.90	0.77	0.26	450	340	58331E3
	330	40 x 40	1.52	2.88	0.77	0.26	450	340	48331E3
	470	40 x 50	1.96	3.72	1.09	0.36	320	260	58471E3
	680	40 x 70	2.70	5.12	1.58	0.53	220	190	58681E3
	1000	40 x 100	3.70	7.02	2.31	0.78	180	140	58102E3
400	68	25 x 30	0.54	1.02	0.16	0.06	2100	1000	56689E3
	100	25 x 40	0.73	1.38	0.24	0.08	1400	780	56101E3
	150	30 x 40	0.98	1.86	0.36	0.12	950	520	56151E3
	220	35 x 40	1.28	2.43	0.52	0.17	650	400	56221E3
	330	35 x 50	1.67	3.17	0.79	0.26	480	280	56331E3
	330	40 x 40	1.67	3.17	0.79	0.26	480	280	46331E3
	470	40 x 50	2.12	4.02	1.12	0.37	340	220	56471E3
	680	40 x 70	2.90	5.50	1.63	0.54	235	155	56681E3
	1000	40 x 100	4.05	7.68	2.40	0.80	160	110	56102E3

For technical questions, contact: aluminumcaps2@vishay.com
THIS DOCUMENT IS SUBJECT TO CHANGE WITHOUT NOTICE. THE PRODUCTS DESCRIBED HEREIN AND THIS DOCUMENT ARE SUBJECT TO SPECIFIC DISCLAIMERS, SET FORTH AT www.vishay.com/doc?91000

ADDITIONAL ELECTRICAL DATA		
PARAMETER	**CONDITIONS**	**VALUE**
Voltage		
Surge voltage	≤ 250 V versions	$U_s = 1.15 \times U_R$
	≥ 385 V versions	$U_s = 1.1 \times U_R$
Reverse voltage		$U_{rev} \leq 1$ V
Current		
Leakage current	After 1 min at U_R	$I_{L1} \leq 0.006\ C_R \times U_R + 4\ \mu A$
	After 5 min at U_R	$I_{L5} \leq 0.002\ C_R \times U_R + 4\ \mu A$
Inductance		
Equivalent series inductance (ESL)	Case Ø D = 25 mm	Max. 25 nH
	Case Ø D = 30 mm and 35 mm	Max. 30 nH
	Case Ø D = 40 mm	Max. 35 nH

CAPACITANCE (C)

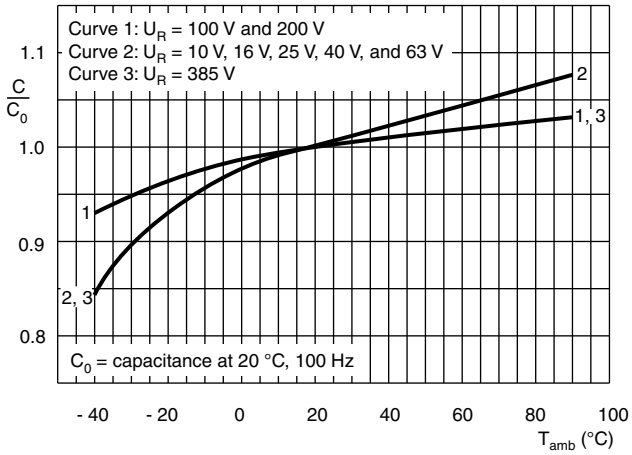

Fig. 10 - Typical multiplier of capacitance as a function of ambient temperature

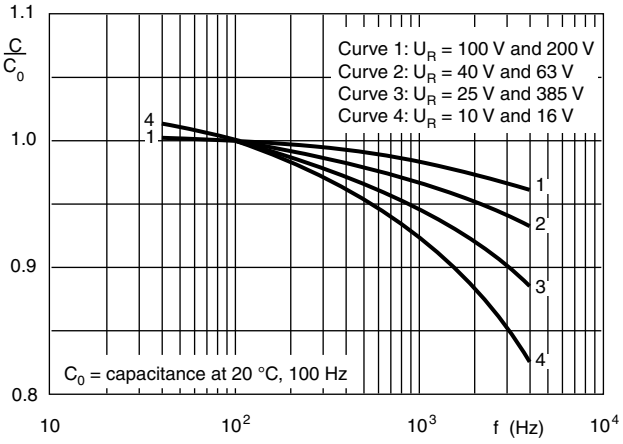

Fig. 11 - Typical multiplier of capacitance as a function of frequency

EQUIVALENT SERIES RESISTANCE (ESR)

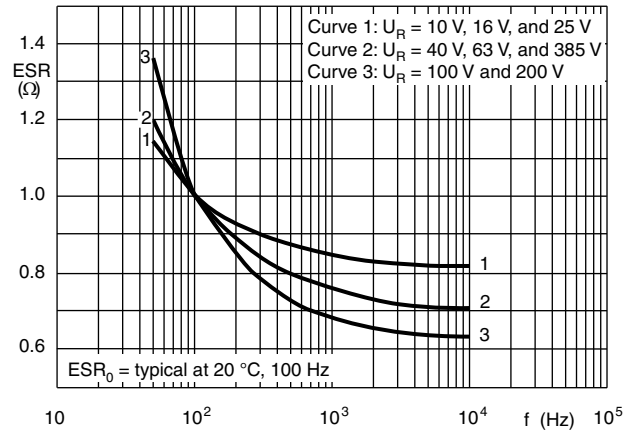

Fig. 12 - Typical multiplier of typical ESR as a function of frequency

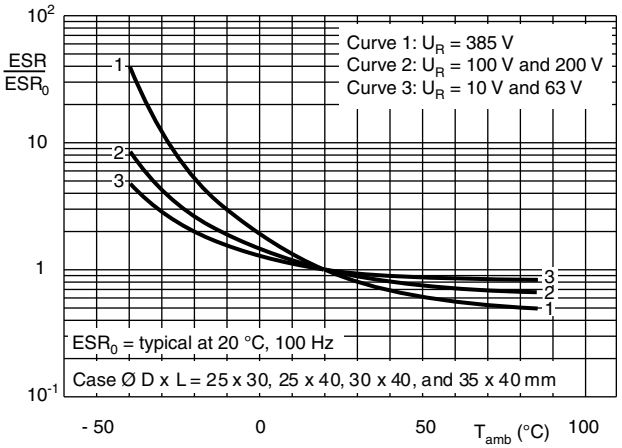

Fig. 13 - Typical multiplier of ESR as a function of ambient temperature

For technical questions, contact: aluminumcaps2@vishay.com

THIS DOCUMENT IS SUBJECT TO CHANGE WITHOUT NOTICE. THE PRODUCTS DESCRIBED HEREIN AND THIS DOCUMENT ARE SUBJECT TO SPECIFIC DISCLAIMERS, SET FORTH AT www.vishay.com/doc?91000

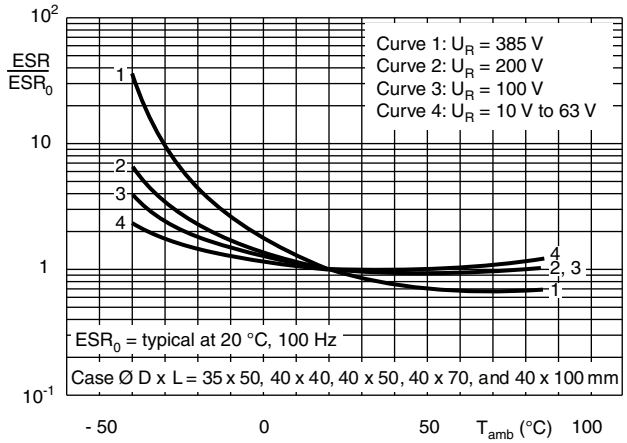

Fig. 14 - Typical multiplier of ESR as a function of ambient temperature

IMPEDANCE (Z)

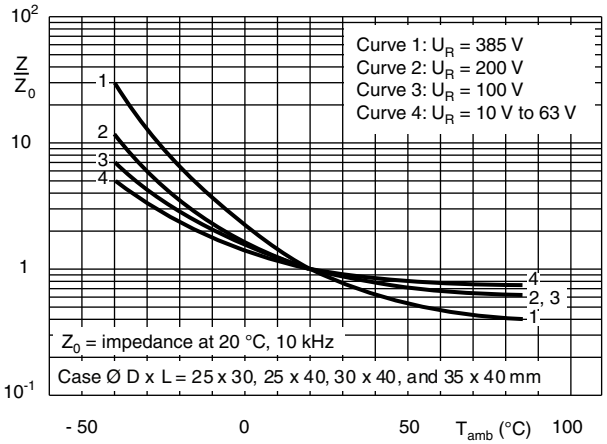

Fig. 15 - Typical multiplier of impedance as a function of ambient temperature

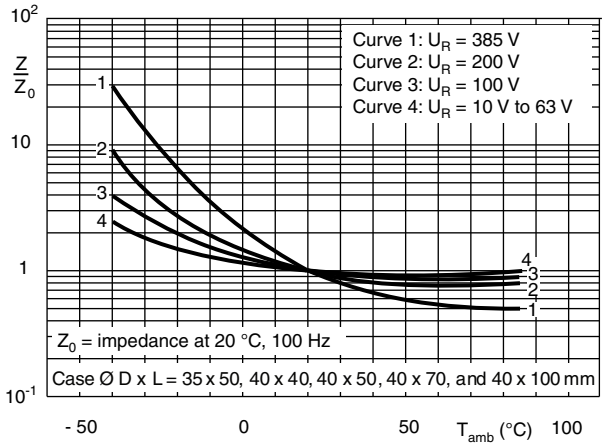

Fig. 16 - Typical multiplier of impedance as a function of ambient temperature

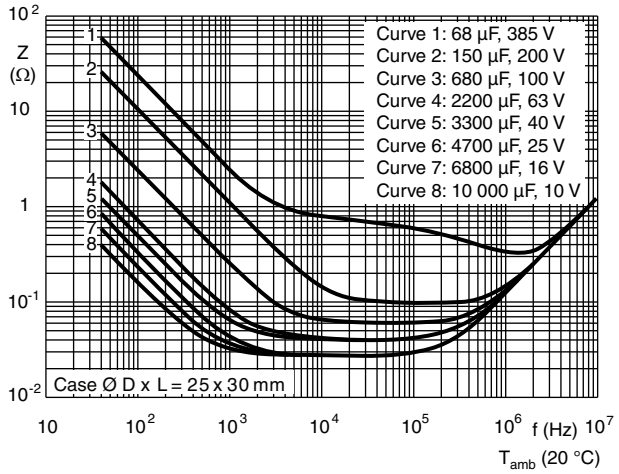

Fig. 17 - Typical impedance as a function of frequency

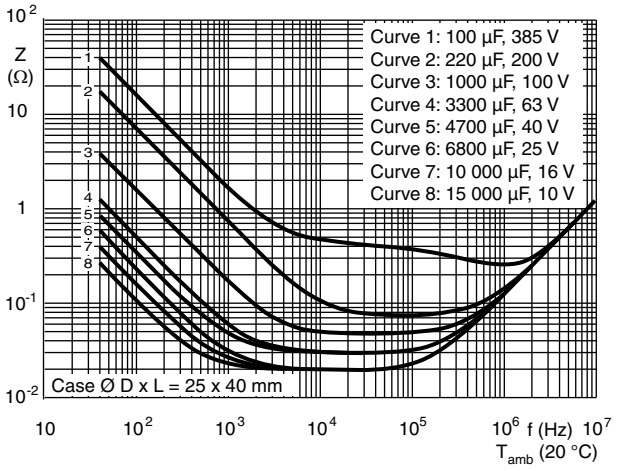

Fig. 18 - Typical impedance as a function of frequency

For technical questions, contact: aluminumcaps2@vishay.com
THIS DOCUMENT IS SUBJECT TO CHANGE WITHOUT NOTICE. THE PRODUCTS DESCRIBED HEREIN AND THIS DOCUMENT ARE SUBJECT TO SPECIFIC DISCLAIMERS, SET FORTH AT www.vishay.com/doc?91000

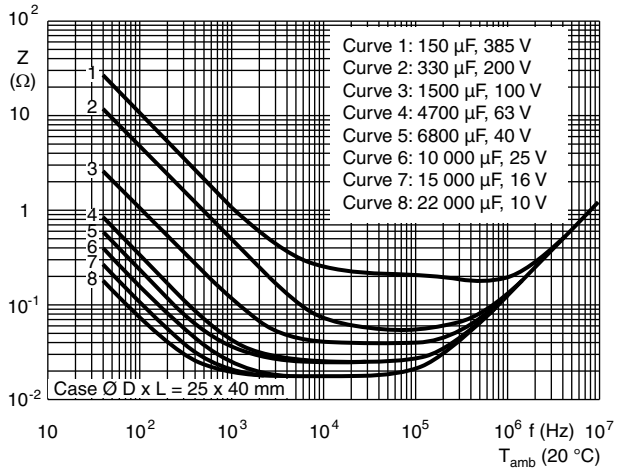

Fig. 19 - Typical impedance as a function of frequency

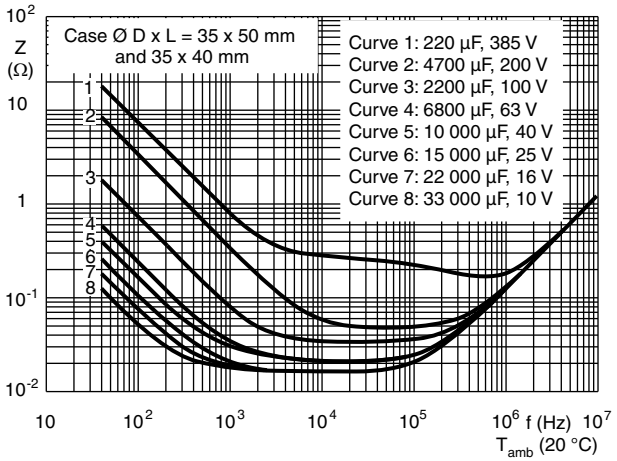

Fig. 20 - Typical impedance as a function of frequency

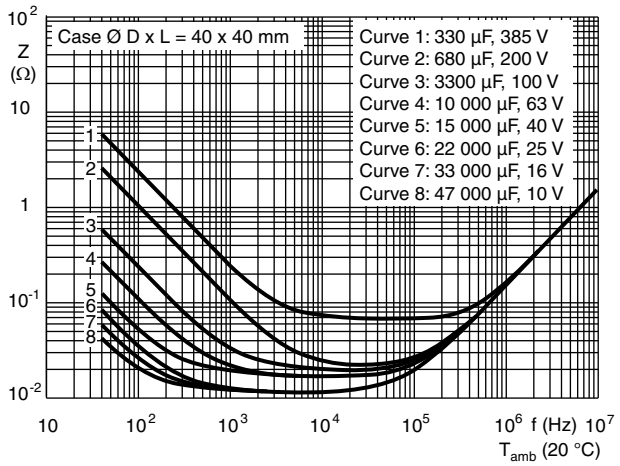

Fig. 21 - Typical impedance as a function of frequency

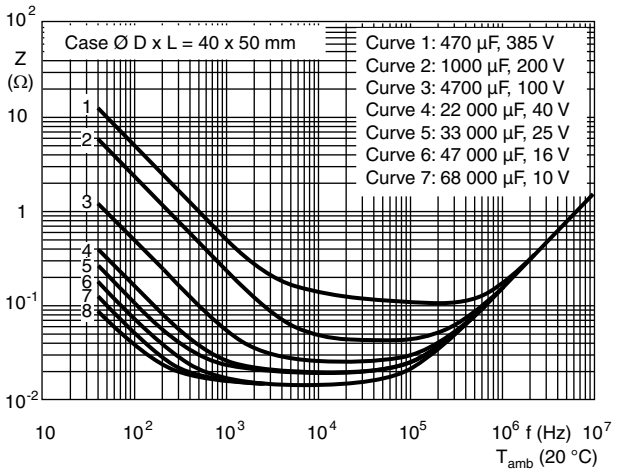

Fig. 22 - Typical impedance as a function of frequency

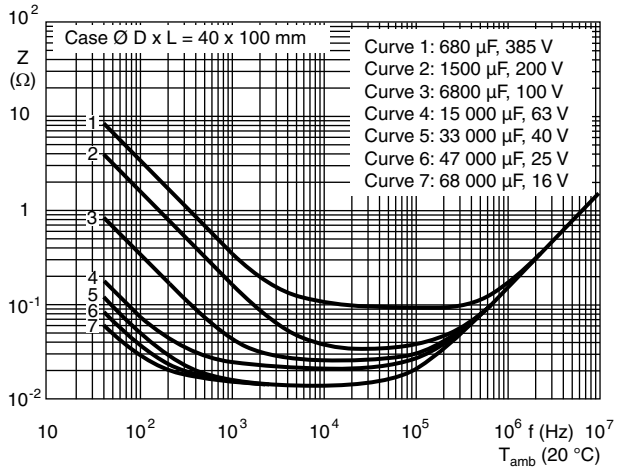

Fig. 23 - Typical impedance as a function of frequency

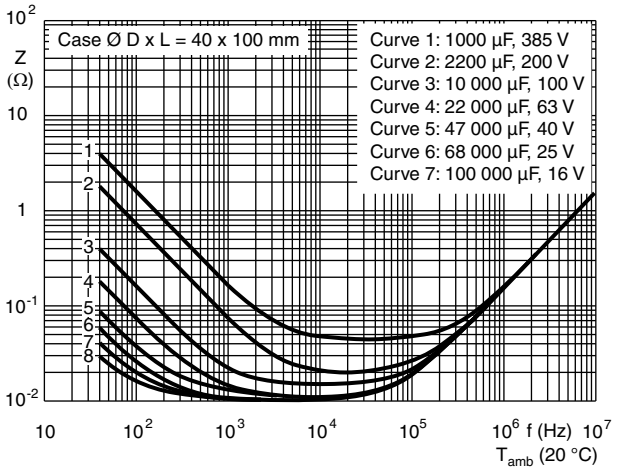

Fig. 24 - Typical impedance as a function of frequency

For technical questions, contact: aluminumcaps2@vishay.com

THIS DOCUMENT IS SUBJECT TO CHANGE WITHOUT NOTICE. THE PRODUCTS DESCRIBED HEREIN AND THIS DOCUMENT ARE SUBJECT TO SPECIFIC DISCLAIMERS, SET FORTH AT www.vishay.com/doc?91000

RIPPLE CURRENT AND USEFUL LIFE

Table 4

ENDURANCE TEST DURATION AND USEFUL LIFE	
ENDURANCE AT 85 °C (h)	**USEFUL LIFE AT 85 °C (h)**
5000	12 000

Note

- Multiplier of useful life code: MGA453

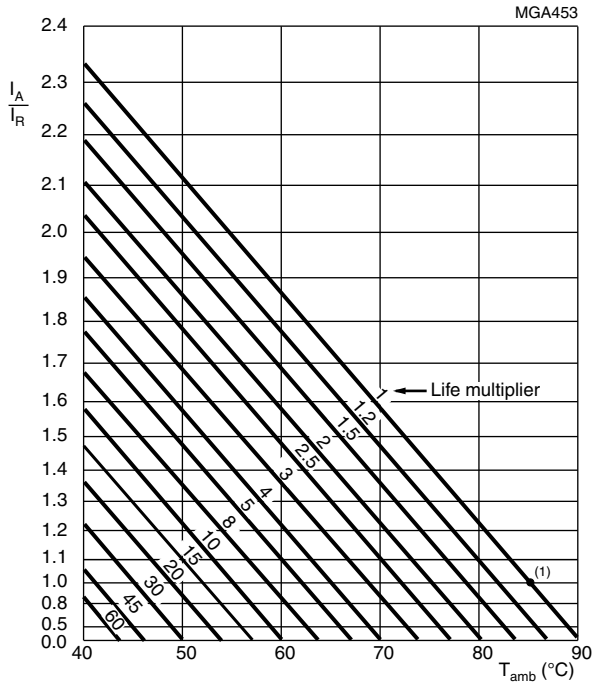

I_A = Actual ripple current at 100 Hz

I_R = Rated ripple current at 100 Hz and 85 °C

(1) Useful life at 85 °C and I_R applied: 12 000 h

Fig. 25 - Multiplier of useful life as a function of ambient temperature and ripple current load

Table 5

MULTIPLIER OF RIPPLE CURRENT (I_R) AS A FUNCTION OF FREQUENCY					
FREQUENCY (Hz)					
50	**100**	**200**	**400**	**1000**	**≥ 2000**
I_R MULTIPLIER					
0.83	1.00	1.10	1.15	1.19	1.20

For technical questions, contact: aluminumcaps2@vishay.com

THIS DOCUMENT IS SUBJECT TO CHANGE WITHOUT NOTICE. THE PRODUCTS DESCRIBED HEREIN AND THIS DOCUMENT ARE SUBJECT TO SPECIFIC DISCLAIMERS, SET FORTH AT www.vishay.com/doc?91000

Table 6

TEST PROCEDURES AND REQUIREMENTS			
TEST		PROCEDURE (quick reference)	REQUIREMENTS
NAME OF TEST	REFERENCE		
Endurance	IEC 60384-4 / EN130300 subclause 4.13	T_{amb} = 85 °C; U_R applied; 5000 h	$U_R \leq 100$ V; ΔC/C: ± 15 % $U_R > 100$ V; ΔC/C: ± 10 % ESR ≤ 1.3 x spec. limit Z ≤ 2 x spec. limit I_{L5} ≤ spec. limit
Useful life	CECC 30301 subclause 1.8.1	T_{amb} = 85 °C; U_R and I_R applied; 12 000 h	$U_R \leq 100$ V; ΔC/C: ± 45 % $U_R > 100$ V; ΔC/C: ± 30 % ESR ≤ 3 x spec. limit Z ≤ 3 x spec. limit I_{L5} ≤ spec. limit no short or open circuit, no visible damage total failure percentage: $U_R \leq 100$ V: ≤ 1 %; $U_R > 100$ V: ≤ 3 %
Shelf life (storage at high temperature)	IEC 60384-4 / EN130300 subclause 4.17	T_{amb} = 85 °C; no voltage applied; 500 h after test: U_R to be applied for 30 min, 24 h to 48 h before measurement	ΔC/C: ± 10 % ESR ≤ 1.2 x spec. limit I_{L5} ≤ 2 x spec. limit

Statements about product lifetime are based on calculations and internal testing. They should only be interpreted as estimations. Also due to external factors, the lifetime in the field application may deviate from the calculated lifetime. In general, nothing stated herein shall be construed as a guarantee of durability.

For technical questions, contact: aluminumcaps2@vishay.com
THIS DOCUMENT IS SUBJECT TO CHANGE WITHOUT NOTICE. THE PRODUCTS DESCRIBED HEREIN AND THIS DOCUMENT ARE SUBJECT TO SPECIFIC DISCLAIMERS, SET FORTH AT www.vishay.com/doc?91000

Disclaimer

ALL PRODUCT, PRODUCT SPECIFICATIONS AND DATA ARE SUBJECT TO CHANGE WITHOUT NOTICE TO IMPROVE RELIABILITY, FUNCTION OR DESIGN OR OTHERWISE.

Vishay Intertechnology, Inc., its affiliates, agents, and employees, and all persons acting on its or their behalf (collectively, “Vishay”), disclaim any and all liability for any errors, inaccuracies or incompleteness contained in any datasheet or in any other disclosure relating to any product.

Vishay makes no warranty, representation or guarantee regarding the suitability of the products for any particular purpose or the continuing production of any product. To the maximum extent permitted by applicable law, Vishay disclaims (i) any and all liability arising out of the application or use of any product, (ii) any and all liability, including without limitation special, consequential or incidental damages, and (iii) any and all implied warranties, including warranties of fitness for particular purpose, non-infringement and merchantability.

Statements regarding the suitability of products for certain types of applications are based on Vishay's knowledge of typical requirements that are often placed on Vishay products in generic applications. Such statements are not binding statements about the suitability of products for a particular application. It is the customer's responsibility to validate that a particular product with the properties described in the product specification is suitable for use in a particular application. Parameters provided in datasheets and / or specifications may vary in different applications and performance may vary over time. All operating parameters, including typical parameters, must be validated for each customer application by the customer's technical experts. Product specifications do not expand or otherwise modify Vishay's terms and conditions of purchase, including but not limited to the warranty expressed therein.

Hyperlinks included in this datasheet may direct users to third-party websites. These links are provided as a convenience and for informational purposes only. Inclusion of these hyperlinks does not constitute an endorsement or an approval by Vishay of any of the products, services or opinions of the corporation, organization or individual associated with the third-party website. Vishay disclaims any and all liability and bears no responsibility for the accuracy, legality or content of the third-party website or for that of subsequent links.

Except as expressly indicated in writing, Vishay products are not designed for use in medical, life-saving, or life-sustaining applications or for any other application in which the failure of the Vishay product could result in personal injury or death. Customers using or selling Vishay products not expressly indicated for use in such applications do so at their own risk. Please contact authorized Vishay personnel to obtain written terms and conditions regarding products designed for such applications.

No license, express or implied, by estoppel or otherwise, to any intellectual property rights is granted by this document or by any conduct of Vishay. Product names and markings noted herein may be trademarks of their respective owners.

© 2024 VISHAY INTERTECHNOLOGY, INC. ALL RIGHTS RESERVED