Interference Suppression Film Capacitors - Class X2
Radial MKP 300 V_{AC} - Standard Across The Line X2

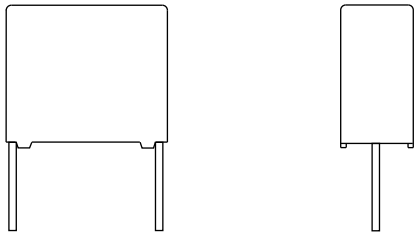

FEATURES

- Compliant with IEC 60381-14: AMD1 THB grade IA
- 7 A max. I_{RMS} at 10 µF
- Self-healing properties
- Material categorization: for definitions of compliance please see www.vishay.com/doc?99912

Pb-free

RoHS COMPLIANT

APPLICATIONS

For across the line X2 applications.

Please see section application notes in this specification and especially www.vishay.com/doc?28153.

QUICK REFERENCE DATA	
Capacitance range (E12 series)	0.01 µF to 10 µF (preferred values according to E6)
Capacitance tolerance	± 20 %, ± 10 %
Rated AC voltage	300 V_{AC}; 50 Hz to 60 Hz
Permissible DC voltage	800 V_{DC} at 85 °C 630 V_{DC} at 110 °C
Climatic testing class according to IEC 60068-1	55/105/56/C for product volumes ≤ 1750 mm^3 55/105/56/B for product volumes > 1750 mm^3
Rated temperature	105 °C
Maximum application temperature	105 °C
Reference standards	IEC 60384-14:2013 IEC 60384-14:2013 / AMD1:2016 EN 60384-14:2013 + AMD1:2016 IEC 60065 pass. flamm. class B for volumes > 1750 mm^3 ENEC; UL 60384-14
Dielectric	Polypropylene film
Electrodes	Metallized film
Construction	Mono construction
Encapsulation	Plastic case, epoxy resin sealed, flame retardant UL-class 94 V-0
Leads	Tinned wire
Marking	C-value; tolerance; rated voltage; sub-class; manufacturer's type designation; code for dielectric material; manufacturer location, year and week; manufacturer's logo or name; safety approvals

Note

- For more detailed data and test requirements, contact rfi@vishay.com

DIMENSIONS

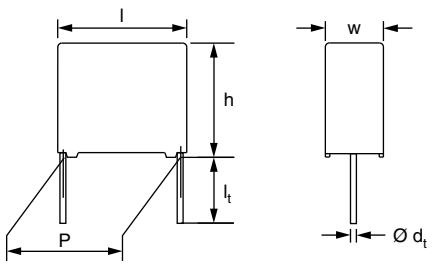

For technical questions, contact: rfi@vishay.com

THIS DOCUMENT IS SUBJECT TO CHANGE WITHOUT NOTICE. THE PRODUCTS DESCRIBED HEREIN AND THIS DOCUMENT ARE SUBJECT TO SPECIFIC DISCLAIMERS, SET FORTH AT www.vishay.com/doc?91000

COMPOSITION OF CATALOG NUMBER

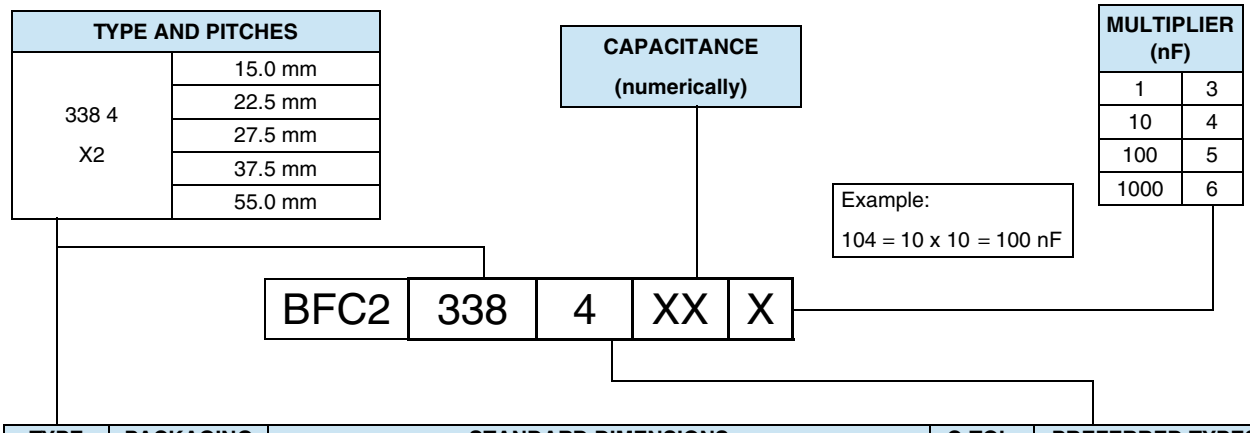

TYPE	PACKAGING	STANDARD DIMENSIONS	C-TOL.	PREFERRED TYPES
338 4 X2	Loose in box	Lead length 3.5 mm ± 0.3 mm	± 20 %	BFC2 338 44 ...
		Lead length 5.0 mm ± 1.0 mm		BFC2 338 40 ...
		Lead length 25.0 mm ± 2.0 mm		BFC2 338 41 ...
	Taped (1)(2)	15.0 mm		BFC2 338 4. ...
	PACKAGING	**ALTERNATIVE PITCH SIZES**	**C-TOL.**	**ON REQUEST**
	Loose in box	Lead length 3.5 mm ± 0.3 mm	± 20 %	See tables for details
		Lead length 5.0 mm ± 1.0 mm		
		Lead length 25.0 mm ± 2.0 mm		
	PACKAGING	**ALTERNATIVE TAPED VERSION**	**C-TOL.**	**ON REQUEST**
	Taped (1)(2)	H = 18.5 mm; for P_0 = 12.7 mm	± 20 %	See tables for details
	PACKAGING	**ALTERNATIVE C-TOL.**	**C-TOL.**	**ON REQUEST**
	Loose in box	Lead length 3.5 mm ± 0.3 mm	± 10 %	See tables for details
		Lead length 5.0 mm ± 1.0 mm		
		Lead length 25.0 mm ± 2.0 mm		
	Taped (1)(2)	15.0 mm		
		H = 18.5 mm; P_0 = 12.7 mm		

Notes

(1) For detailed tape specification refer to packaging information: www.vishay.com/doc?28139

(2) Tape on reel pitch = 27.5 mm is not available

SPECIFIC REFERENCE DATA

DESCRIPTION	VALUE		
Tangent of loss angle:	at 1 kHz	at 10 kHz	at 100 kHz
Pitch = 15 mm; 22.5 mm and 27.5 mm for C ≤ 470 nF	≤ 10 x 10^{-4}	≤ 20 x 10^{-4}	≤ 100 x 10^{-4}
Pitch = 15 mm; 22.5 mm and 27.5 mm for 470 nF < C ≤ 1 µF	≤ 20 x 10^{-4}	≤ 70 x 10^{-4}	-
Pitch = 15 mm; 22.5 mm and 27.5 mm for 1 µF < C ≤ 3.3 µF	≤ 30 x 10^{-4}	-	-
Pitch = 37.5 mm and 55 mm for 2.2 µF < C ≤ 4.7 µF	≤ 50 x 10^{-4}	-	-
Pitch = 37.5 mm and 55 mm for 4.7 µF < C ≤ 10 µF	≤ 100 x 10^{-4}	-	-
Rated voltage pulse slope $(dU/dt)_R$ at 420 V_{DC}	100 V/µs		
R between leads, for C ≤ 0.33 µF at 100 V; 1 min	> 15 000 MΩ		
RC between leads, for C > 0.33 µF at 100 V; 1 min	> 5000 s		
R between leads and case; 100 V; 1 min	> 30 000 MΩ		
Withstanding (DC) voltage (cut off current 10 mA) (1); rise time ≤ 1000 V/s:			
C ≤ 1 µF	2200 V; 1 min		
1 µF < C ≤ 3.3 µF (not pitch = 37.5 mm)	1850 V; 1 min		
Pitch = 37.5 mm and 55 mm	1400 V; 1 min		
Withstanding (AC) voltage between leads and case	2200 V; 1 min		

Note

(1) See “Voltage Proof Test for Metalized Film Capacitors”: www.vishay.com/doc?28169

For technical questions, contact: rfi@vishay.com

THIS DOCUMENT IS SUBJECT TO CHANGE WITHOUT NOTICE. THE PRODUCTS DESCRIBED HEREIN AND THIS DOCUMENT ARE SUBJECT TO SPECIFIC DISCLAIMERS, SET FORTH AT www.vishay.com/doc?91000

ELECTRICAL DATA AND ORDERING INFORMATION

U_{RAC} (V)	CAP. (µF)	DIMENSIONS w x h x l (mm)	MASS [3] (g)	CATALOG NUMBER BFC2 338 ..... AND PACKAGING						
				LOOSE IN BOX					REEL [1][2]	
				SHORT LEADS			LONG LEADS		Ø = 500 mm H = 18.5 mm; P_0 = 12.7 mm	
				l_t = 3.5 mm ± 0.3 mm	l_t = 5.0 mm ± 1.0 mm	SPQ	l_t = 25.0 mm ± 2.0 mm	SPQ		SPQ
300	PITCH = 15.0 mm ± 0.4 mm; d_t = 0.60 mm ± 0.06 mm; C-TOL. = ± 20 %									
	0.010	5.0 x 11.0 x 17.5	1.0	44103	40103	1000	41103	1000	48127	1000
	0.015			44153	40153		41153		48128	
	0.022			44223	40223		41223		48129	
	0.033			44333	40333		41333		48131	
	0.047			44473	40473		41473		48132	
	0.068			44683	40683		41683		48133	
	0.10	6.0 x 12.0 x 17.5	1.4	44104	40104	1000	41104	1000	48134	1000
	PITCH = 15.0 mm ± 0.4 mm; d_t = 0.80 mm ± 0.08 mm; C-TOL. = ± 20 %									
	0.15	7.0 x 13.5 x 17.5	1.8	44154	40154	750	41154	500	48135	500
	0.22	8.5 x 15.0 x 17.5	2.4	44224	40224	750	41224	500	48136	500
	0.33	10.0 x 16.5 x 17.5	3.0	44334	40334	500	41334	450	48137	600
	PITCH = 22.5 mm ± 0.4 mm; d_t = 0.80 mm ± 0.08 mm; C-TOL. = ± 20 %									
	0.22	7.0 x 16.5 x 26.0	2.9	48101	48109	200	48118	250	-	-
	0.33			48103	48112		48121			
	0.47	8.5 x 18.0 x 26.0	3.8	44474	40474	200	41474	250		
	0.68	10.0 x 19.5 x 26.0	6.8	44684	40684	200	41684	200		
	1.0	12.0 x 22.0 x 26.0	7.8	44105	40105	150	41105	200		
	PITCH = 27.5 mm ± 0.4 mm; d_t = 0.80 mm ± 0.08 mm; C-TOL. = ± 20 %									
	0.47	9.0 x 19.0 x 31.0	5.5	48104	48113	100	48122	150	-	-
	0.68	11.0 x 21.0 x 31.0	7.4	48106	48115	100	48124	150		
	1.0			48108	48117		48126			
	1.5	15.0 x 25.0 x 31.0	12.3	44155	40155	100	41155	125		
	2.2	18.0 x 28.0 x 31.0	16.1	44225	40225	100	41225	100		
	3.3	21.0 x 31.0 x 31.0	20.3	44335	40335	50	41335	75		
	PITCH = 37.5 mm ± 0.7 mm; d_t = 1.0 mm ± 0.1 mm; C-TOL. = ± 20 %									
	4.7	18.5 x 35.5 x 43.0	29.0	-	40475	105	41475	105	-	-
	6.8	21.5 x 38.5 x 42.0	35.0		40685	91	41685	91		
	10	30.0 x 46.0 x 44.0	55.0		48159	63	48161	63		
	PITCH = 55.0 mm ± 1.0 mm; d_t = 1.0 mm ± 0.1 mm; C-TOL. = ± 20 %									
	10	21.5 x 38.5 x 61.0	50.0	-	40106	65	41106	65	-	-
300	PITCH = 15.0 mm ± 0.4 mm; d_t = 0.60 mm ± 0.06 mm; C-TOL. = ± 10 %									
	0.010	5.0 x 11.0 x 17.5	1.0	45103	42103	1000	43103	1000	48138	1000
	0.015			45153	42153		43153		48141	
	0.022			45223	42223		43223		48143	
	0.033			45333	42333		43333		48145	
	0.047			45473	42473		43473		48147	
	0.068			45683	42683		43683		48149	
	0.10	6.0 x 12.0 x 17.5	1.4	45104	42104	1000	43104	1000	48153	1000

For technical questions, contact: rfi@vishay.com
THIS DOCUMENT IS SUBJECT TO CHANGE WITHOUT NOTICE. THE PRODUCTS DESCRIBED HEREIN AND THIS DOCUMENT ARE SUBJECT TO SPECIFIC DISCLAIMERS, SET FORTH AT www.vishay.com/doc?91000

ELECTRICAL DATA AND ORDERING INFORMATION

U_{RAC} (V)	CAP. (µF)	DIMENSIONS w x h x l (mm)	MASS [3] (g)	CATALOG NUMBER BFC2 338 ..... AND PACKAGING						
				LOOSE IN BOX					REEL [1][2]	
				SHORT LEADS			LONG LEADS		Ø = 500 mm H = 18.5 mm; P_0 = 12.7 mm	
				l_t = 3.5 mm ± 0.3 mm	l_t = 5.0 mm ± 1.0 mm	SPQ	l_t = 25.0 mm ± 2.0 mm	SPQ		SPQ
300	PITCH = 15.0 mm ± 0.4 mm; d_t = 0.80 mm ± 0.08 mm; C-TOL. = ± 10 %									
	0.12 0.15	7.0 x 13.5 x 17.5	1.8	45124 45154	42124 42154	750	43124 43154	500	48154 48155	500
	0.18 0.22	8.5 x 15.0 x 17.5	2.4	45184 45224	42184 42224	750	43184 43224	500	48156 48157	500
	0.27	10.0 x 16.5 x 17.5	3.0	45274	42274	500	43274	450	48158	600
	PITCH = 22.5 mm ± 0.4 mm; d_t = 0.80 mm ± 0.08 mm; C-TOL. = ± 10 %									
	0.33	8.5 x 18.0 x 26.0	3.8	45334	42334	200	43334	250	-	-
	0.47	10.0 x 19.5 x 26.0	6.8	45474	42474	200	43474	200		
	0.68	12.0 x 22.0 x 26.0	7.8	45684	42684	150	43684	200		
	PITCH = 27.5 mm ± 0.4 mm; d_t = 0.80 mm ± 0.08 mm; C-TOL. = ± 10 %									
	1.0	13.0 x 23.0 x 31.0	9.2	45105	42105	100	43105	125	-	-
	1.5	15.0 x 25.0 x 31.0	12.3	45155	42155	100	43155	125		
	2.2	21.0 x 31.0 x 31.0	20.3	45225	42225	50	43225	75		
	PITCH = 37.5 mm ± 0.7 mm; d_t = 1.0 mm ± 0.1 mm; C-TOL. = ± 10 %									
	3.3 3.9	18.5 x 35.5 x 43.0	32.0	-	42335 42395	105	43335 43395	105	-	-
	4.7 5.6	21.5 x 38.5 x 42.0	39.0		42475 42565	91	43475 43565	91		
	6.8 8.2	30.0 x 46.0 x 44.0	55.0		48162 48163	63	48165 48166	63		
	10	30.0 x 46.0 x 44.0	65.0		48164		48167			
	PITCH = 55.0 mm ± 1.0 mm; d_t = 1.0 mm ± 0.1 mm; C-TOL. = ± 10 %									
	6.8 8.2 10	21.5 x 38.5 x 61.0	50.0	-	42685 42825 42106	65	43685 43825 43106	65	-	-

Notes

- SPQ = Standard Packing Quantity

(1) H = in-tape height; P_0 = sprocket hole distance; for detailed specifications refer to packaging information: www.vishay.com/doc?28139

(2) Reel diameter = 356 mm is available on request

(3) Weight for short lead product only

For technical questions, contact: rfi@vishay.com
THIS DOCUMENT IS SUBJECT TO CHANGE WITHOUT NOTICE. THE PRODUCTS DESCRIBED HEREIN AND THIS DOCUMENT ARE SUBJECT TO SPECIFIC DISCLAIMERS, SET FORTH AT www.vishay.com/doc?91000

APPROVALS				
SAFETY APPROVALS X2	**VOLTAGE**	**VALUE**	**FILE NUMBERS**	**LINK**
EN 60384-14 (ENEC) (= IEC 60384-14 ed-4 (2013))	300 V_{AC}	10 nF to 10 µF	ENEC16/FI/21/01063	www.vishay.com/doc?28208
UL 60384-14	300 V_{AC}	10 nF to 10 µF	E354331	www.vishay.com/doc?28187
CSA-E384-14	300 V_{AC}	10 nF to 10 µF	E354331	
CB-test certificate	300 V_{AC}	10 nF to 10 µF	FI-39830/A1	www.vishay.com/doc?28207
The ENEC-approval together with the CB-certificate replace all national marks of the following countries (they have already signed the ENEC-agreement): Austria; Belgium; Czech. Republic; Denmark; Finland; France; Germany; Greece; Hungary; Ireland; Italy; Luxembourg; Netherlands; Norway; Portugal; Slovenian; Spain; Sweden; Switzerland; and United Kingdom.				

MOUNTING

Normal Use

The capacitors are designed for mounting on printed-circuit boards. The capacitors packed in bandoliers are designed for mounting in printed-circuit boards by means of automatic insertion machines.

For detailed tape specifications refer to packaging information: www.vishay.com/doc?28139

Specific Method of Mounting to Withstand Vibration and Shock

In order to withstand vibration and shock tests, it must be ensured that the stand-off pips are in good contact with the printed-circuit board:

- For pitches ≤ 15 mm capacitors shall be mechanically fixed by the leads
- For longer pitches the capacitors shall be mounted in the same way and the body clamped

Space Requirements on Printed Circuit Board

The maximum space for length ($l_{max.}$), width ($w_{max.}$) and height ($h_{max.}$) of film capacitors to take in account on the printed circuit board is shown in the drawings.

- For products with pitch ≤ 15 mm, $\Delta w = \Delta l = 0.3$ mm; $\Delta h = 0.1$ mm
- For products with 15 mm < pitch ≤ 27.5 mm, $\Delta w = \Delta l = 0.5$ mm; $\Delta h = 0.1$ mm
- For products with 15 mm < pitch ≤ 37.5 mm, $\Delta w = \Delta l = 0.7$ mm; $\Delta h = 0.5$ mm
- For products with 15 mm < pitch ≤ 52.5 mm, $\Delta w = \Delta l = 1.0$ mm; $\Delta h = 0.5$ mm

Eccentricity defined as in drawing. The maximum eccentricity is smaller than or equal to the lead diameter of the product concerned.

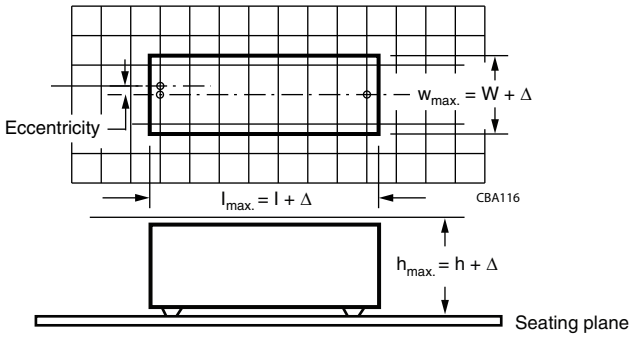

SOLDERING CONDITIONS

For general soldering conditions and wave soldering profile, we refer to the application note: **"Soldering Guidelines for Film Capacitors":** www.vishay.com/doc?28171

Storage Temperature

T_{stg} = -25 °C to +35 °C with RH maximum 75 % without condensation

Ratings and Characteristics Reference Conditions

Unless otherwise specified, all electrical values apply to an ambient temperature of 23 °C ± 1 °C, an atmospheric pressure of 86 kPa to 106 kPa and a relative humidity of 50 % ± 2 %.

For reference testing, a conditioning period shall be applied over 96 h ± 4 h by heating the products in a circulating air oven at the rated temperature and a relative humidity not exceeding 20 %.

For technical questions, contact: rfi@vishay.com

THIS DOCUMENT IS SUBJECT TO CHANGE WITHOUT NOTICE. THE PRODUCTS DESCRIBED HEREIN AND THIS DOCUMENT ARE SUBJECT TO SPECIFIC DISCLAIMERS, SET FORTH AT www.vishay.com/doc?91000

CHARACTERISTICS

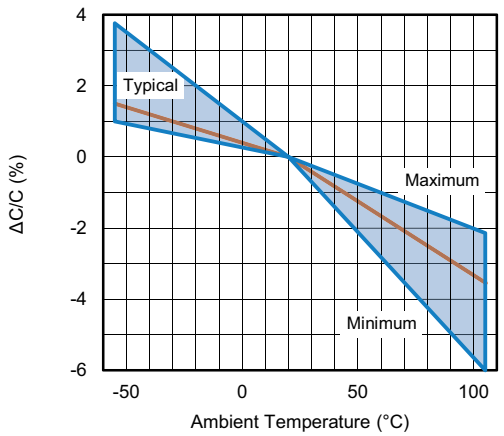

Capacitance as a function of ambient temperature (typical curve)

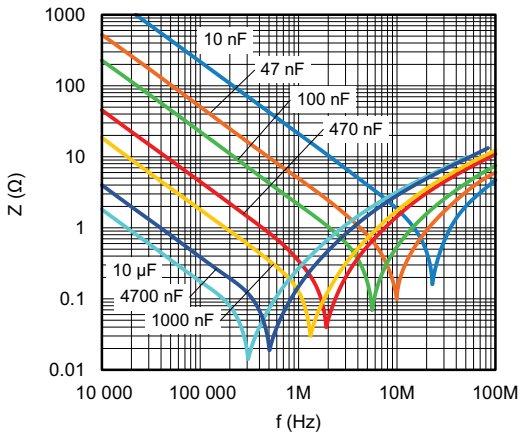

Impedance as a function of frequency (typical curve)

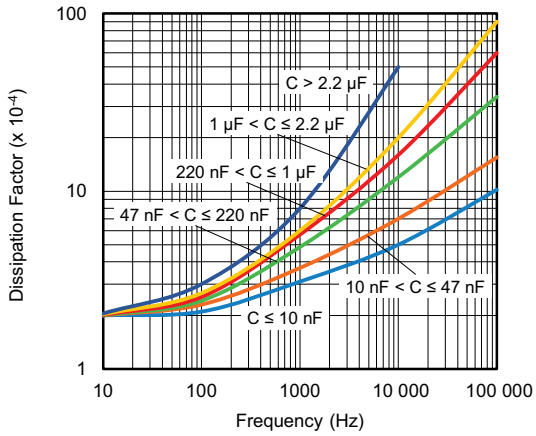

Tangent of loss angle as a function of frequency (typical curve)

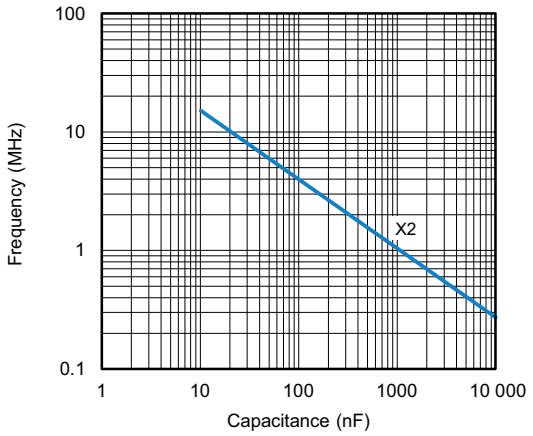

Resonant frequency as a function of capacitance (typical curve)

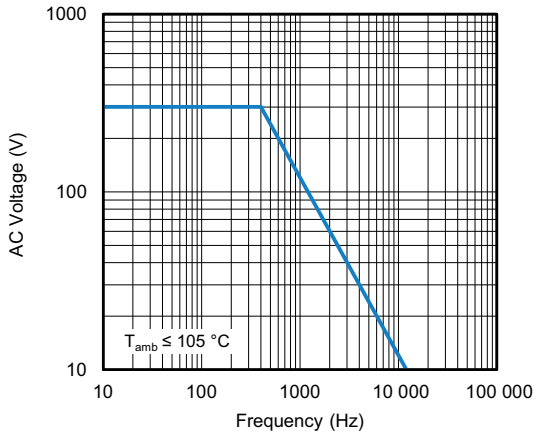

Max. RMS voltage as a function of frequency

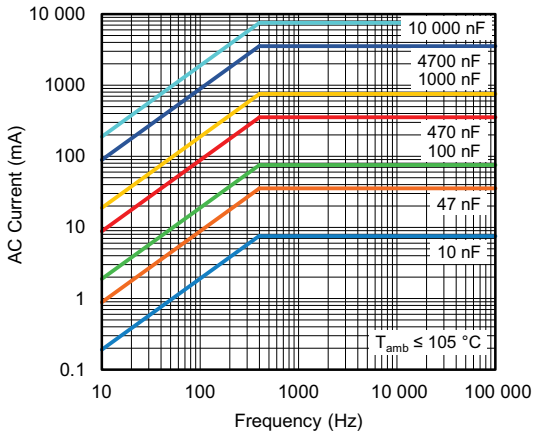

Max. RMS current as a function of frequency

For technical questions, contact: rfi@vishay.com

THIS DOCUMENT IS SUBJECT TO CHANGE WITHOUT NOTICE. THE PRODUCTS DESCRIBED HEREIN AND THIS DOCUMENT ARE SUBJECT TO SPECIFIC DISCLAIMERS, SET FORTH AT www.vishay.com/doc?91000

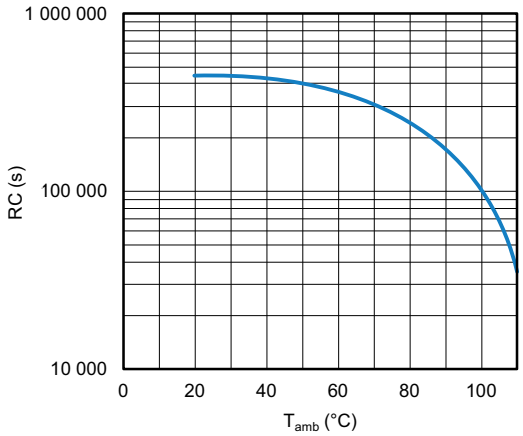

Insulation resistance as a function of ambient temperature

APPLICATION NOTES

- For X2 electromagnetics interference suppression in **standard across the line applications** (50 Hz / 60 Hz) with a maximum mains voltage of 300 V_{AC}
- For series impedance applications we refer to application note www.vishay.com/doc?28153
- For capacitors connected in parallel, normally the proof voltage and possibly the rated voltage must be reduced. For information depending of the capacitance value and the number of parallel connections contact: rfi@vishay.com
- These capacitors are not intended for continuous pulse applications. For these situations, capacitors of the AC and pulse programs must be used
- The maximum ambient temperature must not exceed 105 °C
- Rated voltage pulse slope:
  if the pulse voltage is lower than the rated voltage, the values of the specific reference data can be multiplied by 435 V_{DC} and divided by the applied voltage

INSPECTION REQUIREMENTS

General Notes

Sub-clause numbers of tests and performance requirements refer to the “Sectional Specification, Publication IEC 60384-14 ed-4 (2013) and Specific Reference Data.”

GROUP C INSPECTION REQUIREMENTS		
SUB-CLAUSE NUMBER AND TEST	**CONDITIONS**	**PERFORMANCE REQUIREMENTS**
SUB-GROUP C1A PART OF SAMPLE OF SUB-GROUP C1		
4.1 Dimensions (detail)		As specified in chapters “General data” of this specification
Initial measurements	Capacitance Tangent of loss angle at 10 kHz	
4.3 Robustness of terminations	Tensile: for wire diameter = 0.6 mm and 0.8 mm: load 10 N; 10 s for wire diameter = 1 mm: load 20 N; 10 s Bending: for wire diameter = 0.6 mm and 0.8 mm: load 5 N; 4 x 90° for wire diameter = 1 mm: load 10 N; 4 x 90°	No visible damage

For technical questions, contact: rfi@vishay.com
THIS DOCUMENT IS SUBJECT TO CHANGE WITHOUT NOTICE. THE PRODUCTS DESCRIBED HEREIN AND THIS DOCUMENT ARE SUBJECT TO SPECIFIC DISCLAIMERS, SET FORTH AT www.vishay.com/doc?91000

GROUP C INSPECTION REQUIREMENTS		
SUB-CLAUSE NUMBER AND TEST	**CONDITIONS**	**PERFORMANCE REQUIREMENTS**
SUB-GROUP C1A PART OF SAMPLE OF SUB-GROUP C1		
4.4 Resistance to soldering heat	No pre-drying Method: 1A Solder bath: 280 °C ± 5 °C Duration: 10 s	
4.19 Component solvent resistance	Isopropylalcohol at room temperature Method: 2 Immersion time: 5 min ± 0.5 min Recovery time: min. 1 h, max 2 h	
4.4.2 Final measurements	Visual examination	No visible damage Legible marking
	Capacitance	$\lvert\Delta C/C\rvert \leq 5$ % of the value measured initially
	Tangent of loss angle	Increase of tan δ: ≤ 0.008 for: $C \leq 1$ µF or ≤ 0.005 for: $C > 1$ µF Compared to values measured initially
	Insulation resistance	As specified in chapters “General data” of this specification
SUB-GROUP C1B PART OF SAMPLE OF SUB-GROUP C1		
Initial measurements	Capacitance Tangent of loss angle: for $C \leq 1$ µF at 10 kHz for $C > 1$ µF at 1 kHz	No visible damage Legible marking
4.20 Solvent resistance of the marking	Isopropylalcohol at room temperature Method: 1 Rubbing material: cotton wool Immersion time: 5 min. ± 0.5 min	
4.6 Rapid change of temperature	θA = -55 °C θB = +105 °C 5 cycles Duration t = 30 min	
4.6.1 Inspection 4.7 Vibration	Visual examination Mounting: see section “Mounting” of this specification Procedure B4 Frequency range: 10 Hz to 55 Hz Amplitude: 0.75 mm or Acceleration 98 m/s² (whichever is less severe) Total duration 6 h	No visible damage
4.7.2 Final inspection	Visual examination	No visible damage
4.9 Shock	Mounting: see section “Mounting” for more information Pulse shape: half sine Acceleration: 490 m/s² Duration of pulse: 11 ms	

For technical questions, contact: rfi@vishay.com
THIS DOCUMENT IS SUBJECT TO CHANGE WITHOUT NOTICE. THE PRODUCTS DESCRIBED HEREIN AND THIS DOCUMENT ARE SUBJECT TO SPECIFIC DISCLAIMERS, SET FORTH AT www.vishay.com/doc?91000

GROUP C INSPECTION REQUIREMENTS		
SUB-CLAUSE NUMBER AND TEST	**CONDITIONS**	**PERFORMANCE REQUIREMENTS**
SUB-GROUP C1B PART OF SAMPLE OF SUB-GROUP C1		
4.9.2 Final measurements	Visual examination	No visible damage
	Capacitance	$\|\Delta C/C\| \leq 5$ % of the value measured initially
		Increase of tan δ: ≤ 0.008 for: C ≤ 1 µF or ≤ 0.005 for: C > 1 µF Compared to values measured initially
	Tangent of loss angle	Increase of tan δ ≤ 0.008 Compared to values measured initially
	Insulation resistance	As specified in chapters “General data” of this specification
SUB-GROUP C1 COMBINED SAMPLE OF SPECIMENS OF SUB-GROUPS C1A AND C1B		
4.11 Climatic sequence		
4.11.1 Initial measurements	Capacitance: measured in 4.4.2 and 4.9.2 Tangent of loss angle: measured initially in C1A and C1B	
4.11.2 Dry heat	Temperature: 105 °C Duration: 16 h	
4.11.3 Damp heat cyclic Test Db First cycle		
4.11.4 Cold	Temperature: -55 °C Duration: 2 h	
4.11.5 Damp heat cyclic Test Db Remaining cycles		
4.11.6 Final measurements	Visual examination	No visible damage Legible marking
	Capacitance	$\|\Delta C/C\| \leq 5$ % of the value measured in 4.11.1.
	Tangent of loss angle	Increase of tan δ: ≤ 0.008 for: C ≤ 1 µF or ≤ 0.005 for: C > 1 µF Compared to values measured in 4.11.1
	Voltage proof 1290 V_{DC}; pitch ≤ 27.5 mm 1320 V_{DC}; pitch > 27.5 mm 1 min between terminals	No permanent breakdown or flash-over
	Insulation resistance	≥ 50 % of values specified in chapters “General data” of this specification

For technical questions, contact: rfi@vishay.com
THIS DOCUMENT IS SUBJECT TO CHANGE WITHOUT NOTICE. THE PRODUCTS DESCRIBED HEREIN AND THIS DOCUMENT ARE SUBJECT TO SPECIFIC DISCLAIMERS, SET FORTH AT www.vishay.com/doc?91000

GROUP C INSPECTION REQUIREMENTS		
SUB-CLAUSE NUMBER AND TEST	**CONDITIONS**	**PERFORMANCE REQUIREMENTS**
SUB-GROUP C2		
4.12 Damp heat steady state	56 days, 40 °C, 90 % to 95 % RH No load	
4.12.1 Initial measurements	Capacitance Tangent of loss angle at 1 kHz	
4.12.3 Final measurements	Visual examination	No visible damage Legible marking
	Capacitance	$\lvert\Delta C/C\rvert \leq 5$ % of the value measured in 4.12.1.
	Tangent of loss angle	Increase of tan δ: ≤ 0.008 for: C ≤ 1 µF or ≤ 0.005 for: C > 1 µF Compared to values measured in 4.12.1
	Voltage proof 1290 V_{DC}; pitch ≤ 27.5 mm 1320 V_{DC}; pitch > 27.5 mm 1 min between terminals	No permanent breakdown or flash-over
	Insulation resistance	≥ 50 % of values specified in section “Insulation resistance” of this specification
SUB-GROUP C3		
4.13.1 Initial measurements	Capacitance Tangent of loss angle: for C ≤ 1 µF at 10 kHz for C > 1 µF at 1 kHz	
4.13 Impulse voltage	3 successive impulses, full wave, peak voltage: X2: 2.5 kV for C ≤ 1 µF X2: 2.5 kV for C > 1 µF Max. 24 pulses	No self healing breakdowns or flash-over
4.14 Endurance	Duration: 1000 h 1.25 x U_{RAC} at 105 °C Once in every hour the voltage is increased to 1000 V_{RMS} for 0.1 s via resistor of 47 Ω ± 5 %	
4.14.7 Final measurements	Visual examination	No visible damage Legible marking
	Capacitance	$\lvert\Delta C/C\rvert \leq 10$ % compared to values measured in 4.13.1.
	Tangent of loss angle	Increase of tan δ: ≤ 0.008 for: C ≤ 1 µF or ≤ 0.005 for: C > 1 µF Compared to values measured in 4.13.1
	Voltage proof 1290 V_{DC}; pitch ≤ 27.5 mm 1320 V_{DC}; pitch > 27.5 mm 1 min between terminals 2200 V_{AC}; 1 min between terminals and case	No permanent breakdown or flash-over
	Insulation resistance	≥ 50 % of values specified in chapters “General data” of this specification

For technical questions, contact: rfi@vishay.com
THIS DOCUMENT IS SUBJECT TO CHANGE WITHOUT NOTICE. THE PRODUCTS DESCRIBED HEREIN AND THIS DOCUMENT ARE SUBJECT TO SPECIFIC DISCLAIMERS, SET FORTH AT www.vishay.com/doc?91000

GROUP C INSPECTION REQUIREMENTS		
SUB-CLAUSE NUMBER AND TEST	**CONDITIONS**	**PERFORMANCE REQUIREMENTS**
SUB-GROUP C4		
4.15 Charge and discharge	10 000 cycles Charged to 420 V_{DC} Discharge resistance: $R = \frac{420\ V_{DC}}{1.5 \times C\ (dU/dt)}$	
4.15.1 Initial measurements	Capacitance Tangent of loss angle at 10 kHz	
4.15.3 Final measurements	Capacitance	$\lvert\Delta C/C\rvert \leq 10$ % compared to values measured in 4.15.1.
	Tangent of loss angle	Increase of tan δ: ≤ 0.008 for: C ≤ 1 µF or ≤ 0.005 for: C > 1 µF Compared to values measured in 4.15.1
	Insulation resistance	≥ 50 % of values specified in section "Insulation resistance" of this specification
SUB-GROUP C5		
4.16 Radio frequency characteristic	Resonance frequency	≥ 0.9 times value as specified in section "Resonant frequency" of this specification
SUB-GROUP C6		
4.17 Passive flammability Class B	Bore of gas jet: Ø 0.5 mm Fuel: butane Test duration for actual volume V in mm³: V ≤ 250: 10 s 250 < V ≤ 500: 20 s 500 < V ≤ 1750: 30 s V > 1750: 60 s One flame application 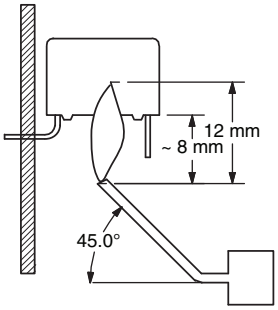	After removing test flame from capacitor, the capacitor must not continue to burn for more than 10 s. No burning particle must drop from the sample.
SUB-GROUP C7		
4.18 Active flammability	20 cycles of 4 kV discharges on the test capacitor connected to U_{RAC}.	The cheese cloth around the capacitors shall not burn with a flame. No electrical measurements are required.

For technical questions, contact: rfi@vishay.com

THIS DOCUMENT IS SUBJECT TO CHANGE WITHOUT NOTICE. THE PRODUCTS DESCRIBED HEREIN AND THIS DOCUMENT ARE SUBJECT TO SPECIFIC DISCLAIMERS, SET FORTH AT www.vishay.com/doc?91000

GROUP C INSPECTION REQUIREMENTS		
SUB-CLAUSE NUMBER AND TEST	**CONDITIONS**	**PERFORMANCE REQUIREMENTS**
SUB-GROUP ADD1		
A.1 Damp heat steady state with voltage	RH: 40 %; temp.: 93 °C, voltage: 300 V_{AC} Duration: 21 days	
A.1.1 Initial measurements	Capacitance Tangent of loss angle: at 10 kHz	
A.1.2 Final measurements	Visual examination	No visible damage Legible marking
	Capacitance	$\lvert\Delta C/C\rvert \leq 10$ % of the value with initial measurement A.1.1
	Tangent of loss angle	Increase of tan $\delta \leq 0.024$ Compared to values with initial measurement A.1.1
	Insulation resistance	≥ 50 % of values specified in section “Insulation Resistance” of this specification

For technical questions, contact: rfi@vishay.com
THIS DOCUMENT IS SUBJECT TO CHANGE WITHOUT NOTICE. THE PRODUCTS DESCRIBED HEREIN AND THIS DOCUMENT ARE SUBJECT TO SPECIFIC DISCLAIMERS, SET FORTH AT www.vishay.com/doc?91000

Disclaimer

ALL PRODUCT, PRODUCT SPECIFICATIONS AND DATA ARE SUBJECT TO CHANGE WITHOUT NOTICE TO IMPROVE RELIABILITY, FUNCTION OR DESIGN OR OTHERWISE.

Vishay Intertechnology, Inc., its affiliates, agents, and employees, and all persons acting on its or their behalf (collectively, “Vishay”), disclaim any and all liability for any errors, inaccuracies or incompleteness contained in any datasheet or in any other disclosure relating to any product.

Vishay makes no warranty, representation or guarantee regarding the suitability of the products for any particular purpose or the continuing production of any product. To the maximum extent permitted by applicable law, Vishay disclaims (i) any and all liability arising out of the application or use of any product, (ii) any and all liability, including without limitation special, consequential or incidental damages, and (iii) any and all implied warranties, including warranties of fitness for particular purpose, non-infringement and merchantability.

Statements regarding the suitability of products for certain types of applications are based on Vishay's knowledge of typical requirements that are often placed on Vishay products in generic applications. Such statements are not binding statements about the suitability of products for a particular application. It is the customer's responsibility to validate that a particular product with the properties described in the product specification is suitable for use in a particular application. Parameters provided in datasheets and / or specifications may vary in different applications and performance may vary over time. All operating parameters, including typical parameters, must be validated for each customer application by the customer's technical experts. Product specifications do not expand or otherwise modify Vishay's terms and conditions of purchase, including but not limited to the warranty expressed therein.

Hyperlinks included in this datasheet may direct users to third-party websites. These links are provided as a convenience and for informational purposes only. Inclusion of these hyperlinks does not constitute an endorsement or an approval by Vishay of any of the products, services or opinions of the corporation, organization or individual associated with the third-party website. Vishay disclaims any and all liability and bears no responsibility for the accuracy, legality or content of the third-party website or for that of subsequent links.

Except as expressly indicated in writing, Vishay products are not designed for use in medical, life-saving, or life-sustaining applications or for any other application in which the failure of the Vishay product could result in personal injury or death. Customers using or selling Vishay products not expressly indicated for use in such applications do so at their own risk. Please contact authorized Vishay personnel to obtain written terms and conditions regarding products designed for such applications.

No license, express or implied, by estoppel or otherwise, to any intellectual property rights is granted by this document or by any conduct of Vishay. Product names and markings noted herein may be trademarks of their respective owners.

© 2024 VISHAY INTERTECHNOLOGY, INC. ALL RIGHTS RESERVED