Compact Limit Switches



FEATURES

- Ideal source of replacement parts for imported machine tools or transplant factories
- NEMA 3,4, 13 and IEC IP 67 sealing
- Smaller size saves space
- Rugged Zinc diecast housing
- Wide product selection to suit many applications
- Snap-in terminal enclosure makes mounting and wiring easy
- Temperature ranges: Standard –10 to +70°C (14 to 158°F); Low temp. with roller lever –40 to +70°C (–40 to 158°F); Low temp. with roller plunger –50 to 70°C (–60 to +158°F)

SL1 series compact limit switches are sealed, sensitive, and have a long life. The compact size makes them suitable for the total miniaturization of machinery or equipment.

Versions are available with: gold-clad cross-point contacts, prewiring, lamp indications, seal boots with roller plungers, and a variety of actuating possibilities.

For rapid response – off the shelf service, all **bold face** listings are normally stocked items.

CIRCUITRY AND ELECTRICAL RATING

	Listing	Rating	Contact
Single-Pole Double-Throw	SL1-□	5A-125, 250VAC	Silver
	SL1-□ K	0.1A-125VAC 0.1A-30VDC	Gold Clad Cross Point

Note: Conduit will seal to cable diameters from 5.8mm to 9.6mm.

ORDER GUIDE AND MOUNTING DIMENSIONS
UL/CSA listings available by adding "2" to catalog listing.
Example: SL1-A2

UL Recognized, file #E37559
CSA Certified, file #LR61344, LR21098, LR47132, LR61643



ROLLER PLUNGER

Catalog Listing	SL1-A
	SL1-AK

O.F. (max.)	1,200 g
R.F. (min.)	500 g
P.T. (max.)	1.5 mm
O.T. (min.)	3 mm
D.T. (max.)	0.1 mm
O.P.	31.4 mm

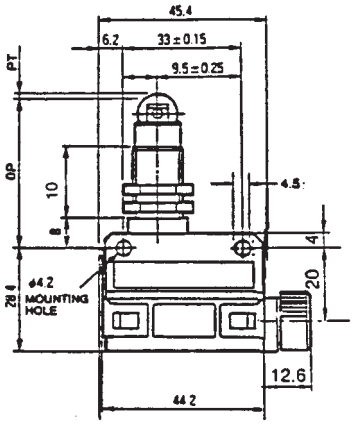

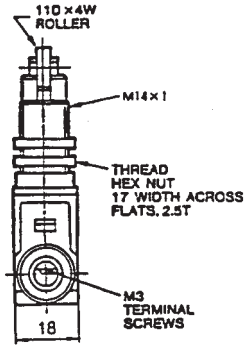



CROSS ROLLER PLUNGER

Catalog Listing	SL1-D
	SL1-DK

O.F. (max.)	1,200 g
R.F. (min.)	500 g
P.T. (max.)	1.5 mm
O.T. (min.)	3 mm
D.T. (max.)	0.1 mm
O.P.	31.4 mm

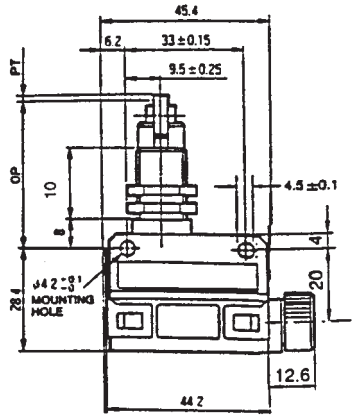

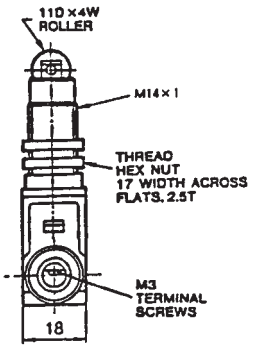

Characteristics: O.F. - Operating Force; R.F. - Release Force; P.T. - Pretravel; O.T. - Overtravel; D.T. - Differential Travel; N - Newtons



STRAIGHT PLUNGER

Catalog Listing	SL1-H
	SL1-HK

O.F. (max.)	1,200 g
R.F. (min.)	500 g
P.T. (max.)	1.5 mm
O.T. (min.)	3 mm
D.T. (max.)	0.1 mm
O.P.	25.4 mm

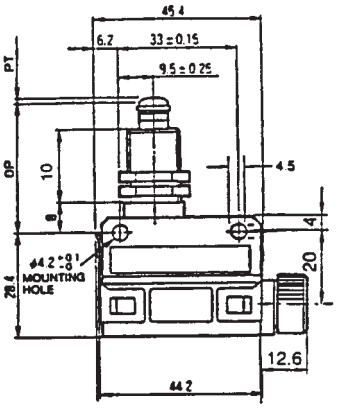

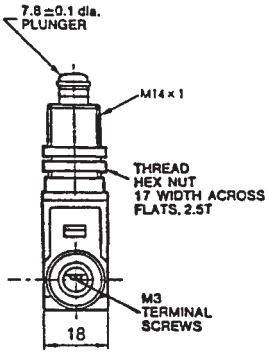



ROLLER LEVER

Catalog Listing	SL1-P
	SL1-PK

O.F. (max.)	400 g
R.F. (min.)	80 g
P.T. (max.)	2 mm
O.T. (min.)	4 mm
D.T. (max.)	0.3 mm
O.P.	23.1 mm

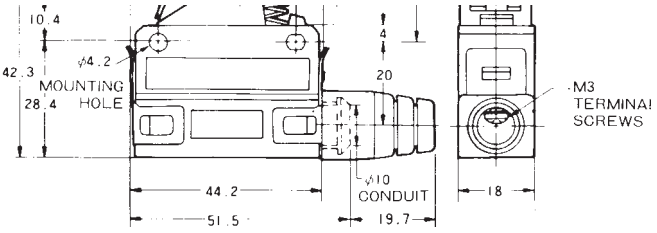



ROLLER PLUNGER WITH SEAL BOOT

Catalog Listing	SL1-B
	SL1-BK

O.F. (max.)	1,200 g
R.F. (min.)	500 g
P.T. (max.)	1.5 mm
O.T. (min.)	3 mm
D.T. (max.)	0.1 mm
O.P.	41.4 mm

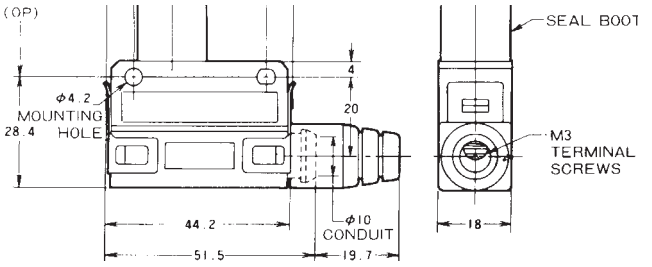

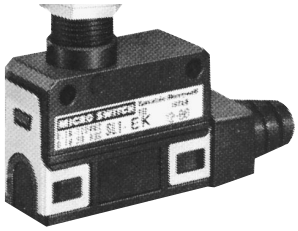

LONG ROLLER PLUNGER

Catalog Listing	SL1-E
	SL1-EK

O.F. (max.)	1,200g
R.F. (min.)	500g
P.T. (max.)	1.5 mm
O.T. (min.)	3 mm
D.T. (max.)	0.1 mm
O.P.	41,4 mm

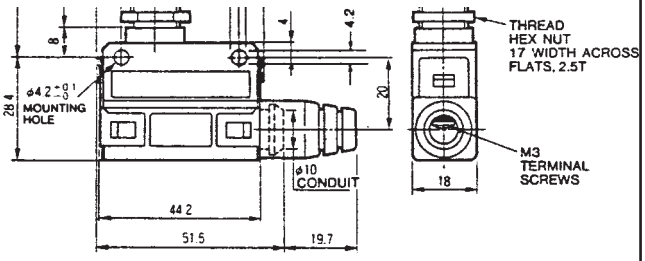

Compact Limit Switches

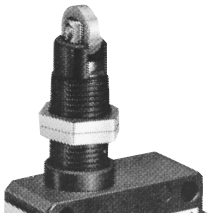

LONG CROSS ROLLER PLUNGER

Catalog Listing	SL1-K
	SL1-KK

O.F. (max.)	1,200g
R.F. (min.)	500g
P.T. (max.)	1.5mm
O.T. (min.)	3mm
D.T. (max.)	0.1mm
O.P.	41,4mm

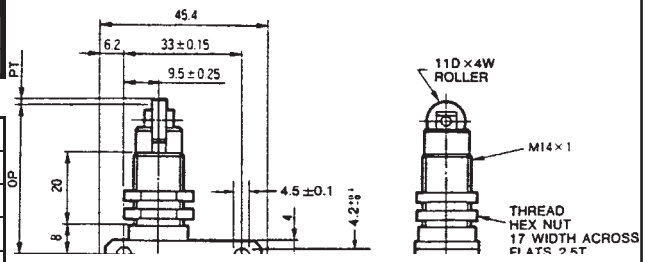

COMPACT LIMIT SWITCHES WITH LAMP INDICATION

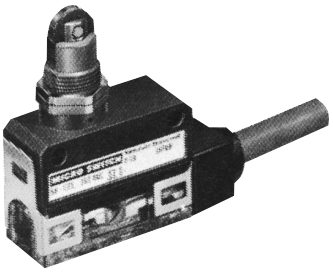

FEATURES
- Available with neon lamp for 100-250 VAC. Available with LED lamp for 24 VDC
- Lamp indication clearly visible from most angles through the rugged transparent nylon enclosure
- Provided with oil resistant vinyl cabtyre cable

ORDER GUIDE

Specification	Catalog Listing	Wiring
• Neon lamp • 100 to 250 VAC • Silver contact	SL1-□ EXG2	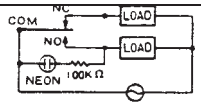
• LED lamp • 24 VDC • Gold clad	SL1-□ KFXG2	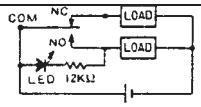

MOUNTING DIMENSIONS
(For reference only) Dimensions - mm

