— S200(L), SZ200, SC200, S200M

End of Life Instruction

Decommissioning instructions available to enable responsible recycling or disposal



PREPARED		DOCUMENT KIND	SECURITY LEVEL		
2024-08-05	Stefan Michel	EoL Instructions	Public		
OWNING ORGANIZATION		DOCUMENT ID.	REV.	LANG.	PAGE
ABB - ELSB		9AKK108468A3132	B	en	1/5

© Copyright 2024 ABB. All rights reserved.

Contents

1. Purpose and Basic Description 3

2. Dismantling instructions 3

2.1. More than 1 pole product: 3

2.2. 1 pole product: 3

3. Constituent materials 5

4. Additional Information 5

1. Purpose and Basic Description

This product family is in the scope of European Union directive 2012/19/EU on Waste Electrical and Electronic Equipment (WEEE). The product family must be disposed according to the legislation of the country. This end-of-life instruction is intended for use by customers and recycling companies which outline the responsible recycling or disposal method of the ABB product.

S200 MCB is designed to be used in installations where medium breaking capacities are required to protect against short-circuits and overloads.

2. Dismantling instructions

2.1. More than 1 pole product:

In case of more than 1 pole, first, the handle toggle(1) and the two marked rivets(2) should be removed to split the product into simple poles.

Then, there are some intermediate pieces that can then be easily removed(3).

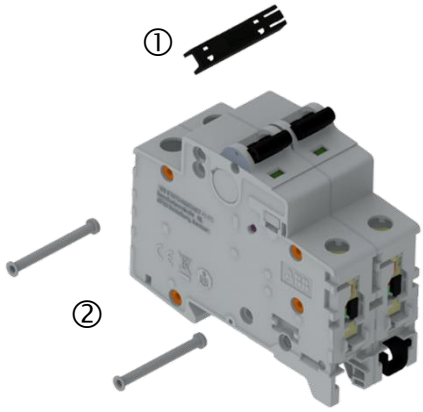

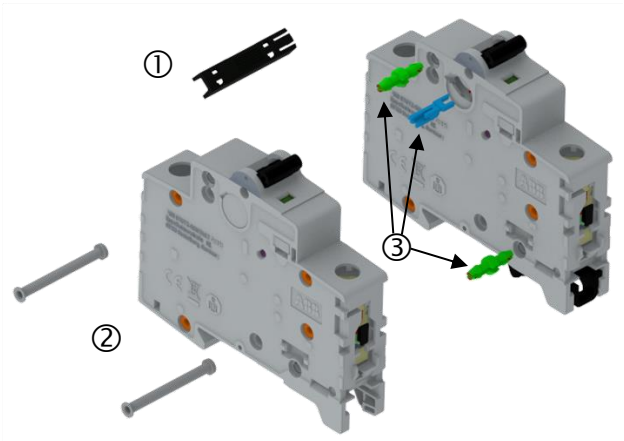

2.2. 1 pole product:

On that point, all single poles will be dismantling on the same way.

Firstly, remove the rivets (only 4 rivets left in products of more than 1 pole), then you will be able to take out the cover and access to all the internal parts.

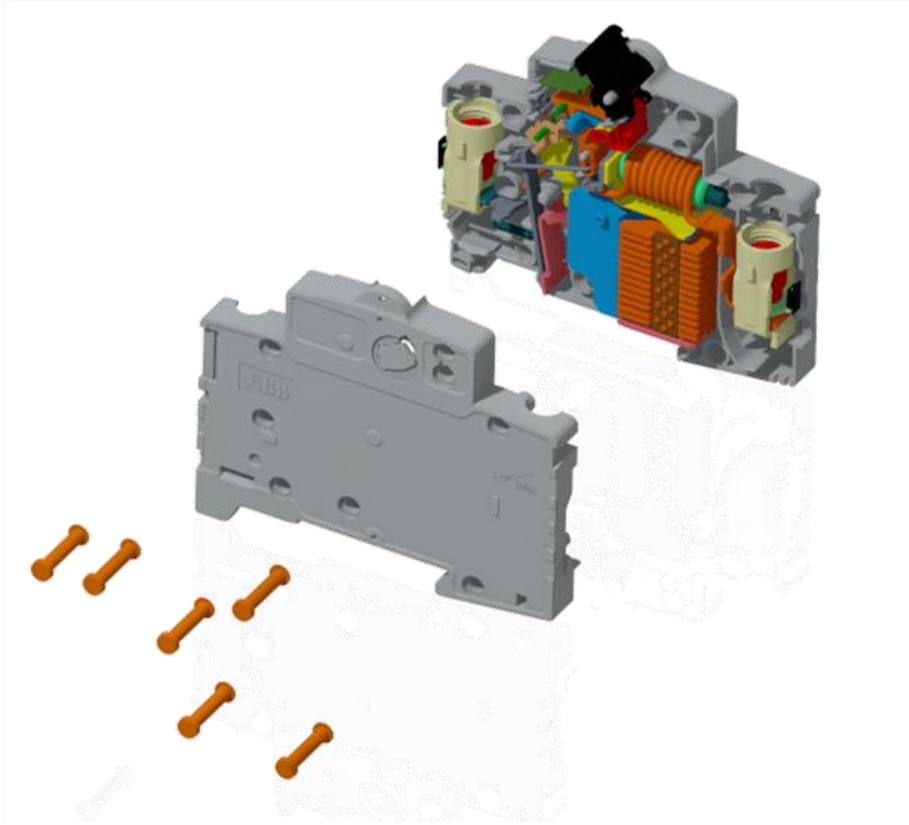

The different parts will be extracted until reaching the configuration of the figure below.

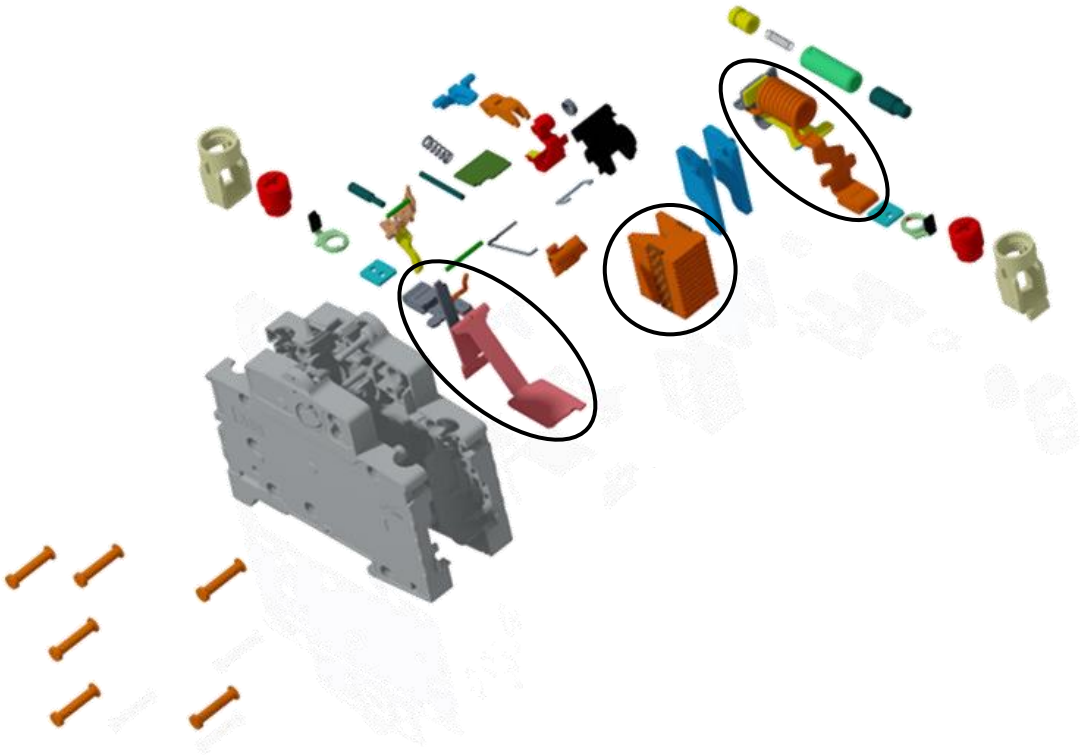

Rounded parts have soldered or riveted pieces that cannot be manually disassembled.

3. Constituent materials

S200(L), SZ200, SC200

Plastics		Metals		Packaging	
PA6	29.6%	Steel	52.7%	Cardboard	5.7%
PA66	2.0%	Copper	4.3%	Others	0.1%
POM	1.4%	Aluminum	2.0%		
Others	0.9%	Others	1.3%		

S200M

Plastics		Metals		Packaging	
PA66	30.2%	Steel	51.4%	Cardboard	5.6%
POM	1.4%	Copper	7.3%	Others	0.1%
Others	0.8%	Aluminum	1.9%		
		Others	1.3%		

Weight percentage of a single pole.

4. Additional Information

S200(L), SZ200, SC200

Weight per Pole	112.40 g
Overall dimensions (H x D x W)	88 x 69 x 17.5 mm
Recyclability rate	51.3%

S200M

Weight per Pole	115.57 g
Overall dimensions (H x D x W)	88 x 69 x 17.5 mm
Recyclability rate	52.2%