DS-2CD1643G2-IZ(S)
4 MP Varifocal Bullet Network Camera





- High quality imaging with 4 MP resolution
- Support Human and Vehicle Detection
- 2.8 to 12 mm motorized varifocal lens for easy installation and monitoring
- Up to 256 GB memory card slot for storage
- Water and dust resistant (IP67)
- EXIR 2.0: advanced infrared technology with long IR range
- Clear imaging even with strong back lighting due to 120 dB WDR technology
- Efficient H.265+ compression technology

▪ Specification

Camera	
Image Sensor	1/3" Progressive Scan CMOS
Max. Resolution	2560 × 1440
Min. Illumination	Color: 0.005 Lux @ (F1.6, AGC ON), B/W: 0 Lux with IR
Shutter Time	1/3 s to 1/100,000 s
Day & Night	IR cut filter
Angle Adjustment	Pan: 0° to 360°, tilt: 0° to 90°, rotate: 0° to 360°
Lens	
Lens Type	Varifocal lens, motorized lens, 2.8 to 12 mm
Focal Length & FOV	2.8 to 12 mm, horizontal FOV 95.9° to 29.2°, vertical FOV 50.6° to 16.4°, diagonal FOV 114.7° to 33.5°
Lens Mount	Ø14
Iris Type	Fixed
Aperture	F1.6
Illuminator	
Supplement Light Type	IR
Supplement Light Range	Up to 50 m
Smart Supplement Light	Yes
IR Wavelength	850 nm
Video	
Main Stream	50 Hz: 20 fps (2560 × 1440) 25 fps (1920 × 1080, 1280 × 720) 60 Hz: 20 fps (2560 × 1440) 24 fps (1920 × 1080, 1280 × 720)
Sub-Stream	50 Hz: 25 fps (1280 × 720, 640 × 480, 640 × 360) 60 Hz: 24 fps (1280 × 720, 640 × 480, 640 × 360)
Video Compression	Main stream: H.265+/H.265/H.264+/H.264 Sub-stream: H.265/H.264/MJPEG
Video Bit Rate	32 Kbps to 8 Mbps
H.264 Type	Baseline Profile, Main Profile, High Profile
H.265 Type	Main Profile
Region of Interest (ROI)	1 fixed region(s) for main stream
Audio	
Audio Compression	-S: G.711ulaw/G.711alaw/G.722.1/G.726/MP2L2/PCM/AAC-LC
Audio Bit Rate	-S: 64 Kbps (G.711)/16 Kbps (G.722.1)/16 Kbps (G.726)/32 to 160 Kbps (MP2L2)/16 to 64 Kbps (AAC-LC)
Audio Sampling Rate	-S: 8 kHz/16 kHz
Environment Noise Filtering	-S: Yes
Network	
Protocols	TCP/IP, ICMP, DHCP, DNS, HTTP, RTP, RTSP, NTP, IGMP, IPv6, UDP, QoS, FTP, SMTP
Simultaneous Live View	Up to 6 channels
API	Open Network Video Interface (Profile S, Profile G, Profile T), ISAPI, SDK

User/Host	Up to 32 users 3 user levels: administrator, operator, and user
Security	Password protection, complicated password, watermark, basic and digest authentication for HTTP, WSSE and digest authentication for Open Network Video Interface, security audit log, host authentication (MAC address)
Client	iVMS-4200, Hik-Connect
Web Browser	Plug-in required live view: IE 10, IE 11 Local service: Chrome 57.0+, Firefox 52.0+
Image	
Image Settings	Rotate mode, saturation, brightness, contrast, sharpness, gain, white balance, adjustable by client software or web browser
Day/Night Switch	Day, Night, Auto, Schedule
Wide Dynamic Range (WDR)	120 dB
Image Enhancement	BLC, HLC, 3D DNR
Interface	
Ethernet Interface	1 RJ45 10 M/100 M self-adaptive Ethernet port
On-Board Storage	Built-in memory card slot, support microSD/microSDHC/microSDXC card, up to 256 GB
Audio	-S: 1 input(s) (line in), two-core terminal block, max. input amplitude: 3.3 Vpp, input impedance: 4.7 KΩ, interface type: non-equilibrium -S: 1 output(s) (line out), two-core terminal block, max. output amplitude: 3.3 Vpp, output impedance: 100 Ω, interface type: non-equilibrium
Alarm	-S: 1 input(s), 1 output(s)(max. 12 VDC, 30 mA)
Reset Key	Yes
Event	
Basic Event	Motion detection (support alarm triggering by specified target types (human and vehicle)), video tampering alarm, exception
Linkage	Upload to FTP/memory card, notify surveillance center, send email, trigger recording, trigger capture, trigger alarm output (-S)
General	
Power	12 VDC ± 25%, 0.9 A, max. 11 W, Ø5.5 mm coaxial power plug PoE: 802.3af, Class 3, 36 V to 57 V, 0.36 A to 0.23 A, max. 12.9 W
Dimension	Ø105 mm × 244.4 mm (Ø4.1" × 9.6")
Package Dimension	315 mm × 137 mm × 141 mm (12.4" × 5.4" × 5.6")
Weight	Approx. 745 g (1.6 lb.)
With Package Weight	Approx. 1124 g (2.5 lb.)
Storage Conditions	-30 °C to 60 °C (-22 °F to 140 °F). Humidity 95% or less (non-condensing)
Startup and Operating Conditions	-30 °C to 60 °C (-22 °F to 140 °F). Humidity 95% or less (non-condensing)
Language	English, Ukrainian
General Function	Heartbeat, anti-banding, mirror, password protection, privacy mask, watermark
Approval	
EMC	FCC: 47 CFR Part 15, Subpart B CE-EMC: EN 55032: 2015, EN 61000-3-2: 2019, EN 61000-3-3: 2013 + A1: 2019, EN 50130-4: 2011 + A1: 2014 RCM: AS/NZS CISPR 32: 2015 IC: ICES-003: Issue 7

Safety	UL: UL 62368-1 CB: IEC 62368-1: 2014 + A11 CE-LVD: EN 62368-1: 2014/A11: 2017 BIS: IS 13252 (Part 1): 2010/IEC 60950-1: 2005
Environment	CE-RoHS: 2011/65/EU WEEE: 2012/19/EU Reach: Regulation (EC) No 1907/2006
Protection	IP67: IEC 60529-2013

▪ Typical Application

Hikvision products are classified into three levels according to their anti-corrosion performance. Refer to the following description to choose for your using environment.

This model has NO SPECIFIC PROTECTION.

Level	Description
Top-level protection	Hikvision products at this level are equipped for use in areas where professional anti-corrosion protection is a must. Typical application scenarios include coastlines, docks, chemical plants, and more.
Moderate protection	Hikvision products at this level are equipped for use in areas with moderate anti-corrosion demands. Typical application scenarios include coastal areas about 2 kilometers (1.24 miles) away from coastlines, as well as areas affected by acid rain.
No specific protection	Hikvision products at this level are equipped for use in areas where no specific anti-corrosion protection is needed.

▪ Available Model

DS-2CD1643G2-IZ (2.8 to 12 mm)

DS-2CD1643G2-IZS (2.8 to 12 mm)

▪ Dimension

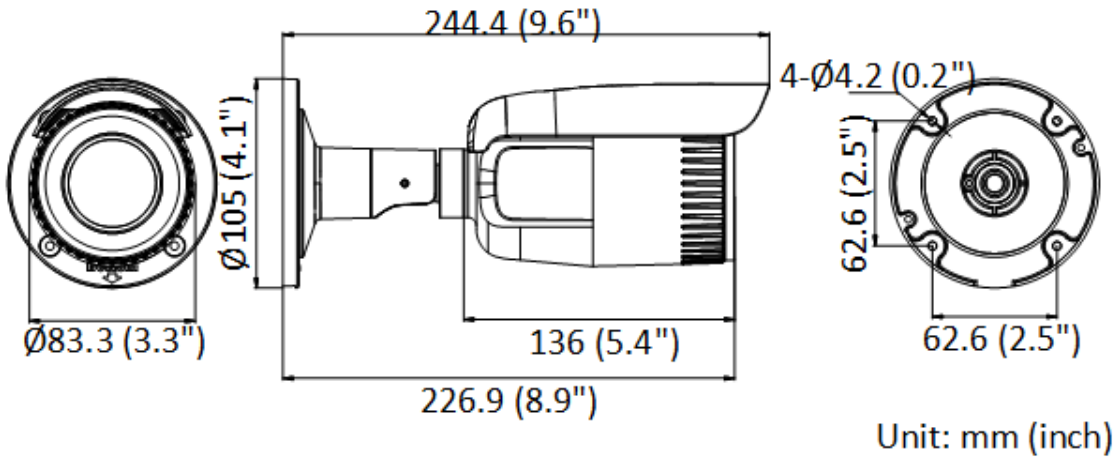

▪ Accessory

▪ Optional

DS-1280ZJ-S Junction Box	DS-1276ZJ-SUS Corner Mount	DS-1275ZJ-S-SUS Vertical Pole Mount	DS-1275ZJ-SUS Vertical Pole Mount	DS-1260ZJ Junction Box
				

Headquarters
No.555 Qianmo Road, Binjiang District,
Hangzhou 310051, China
T +86-571-8807-5998
www.hikvision.com

Follow us on social media to get the latest product and solution information.

Hikvision HikvisionHQ HikvisionHQ Hikvision_Global Hikvision Corporate Channel hikvisionhq

©Hikvision Digital Technology Co., Ltd. 2022 I Data subject to change without notice I