DS-1602ZJ-Corner

Long Arm Wall Corner Mount Bracket



Features:

- Aluminum alloy & steel material with surface spray treatment
- Exquisite and small design
- Design of safety rope for more convenient installation

Dimension:

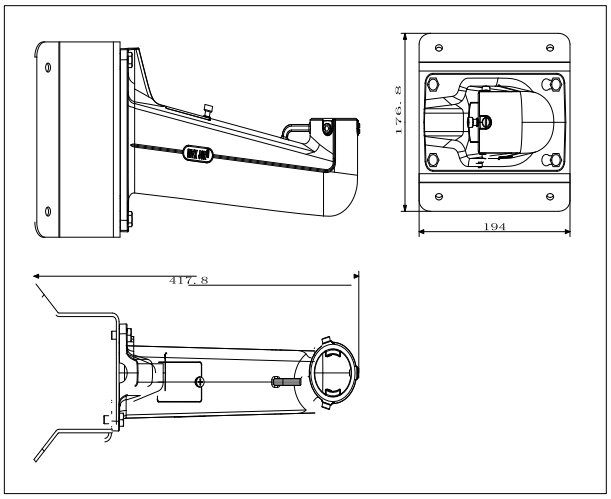

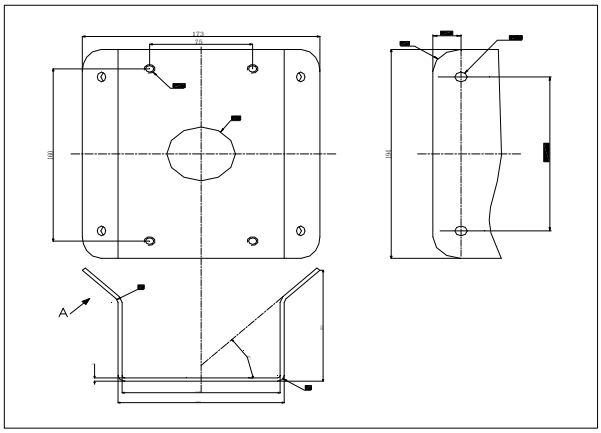

Note: The actual bracket may vary from the picture above.

Order model:

DS-1602ZJ-corner

Parameters:

Model / Parameter	DS-1602ZJ-corner
	Wall Mount Bracket
Color	Hik white
Feature	Suitable for speed dome wall corner mounting
Material	Aluminum alloy & Steel
Dimension	173×194×305mm
Weight	2800g

Notice:

- The bracket should be installed on the flat surface of a wall
- The wall must be capable of supporting more than 3 times the total capacity of the camera and the bracket
- Load capacity of bracket is 30KG