MTK 6mm² SCREW CONNECTION GROUND RAIL TERMINAL BLOCK

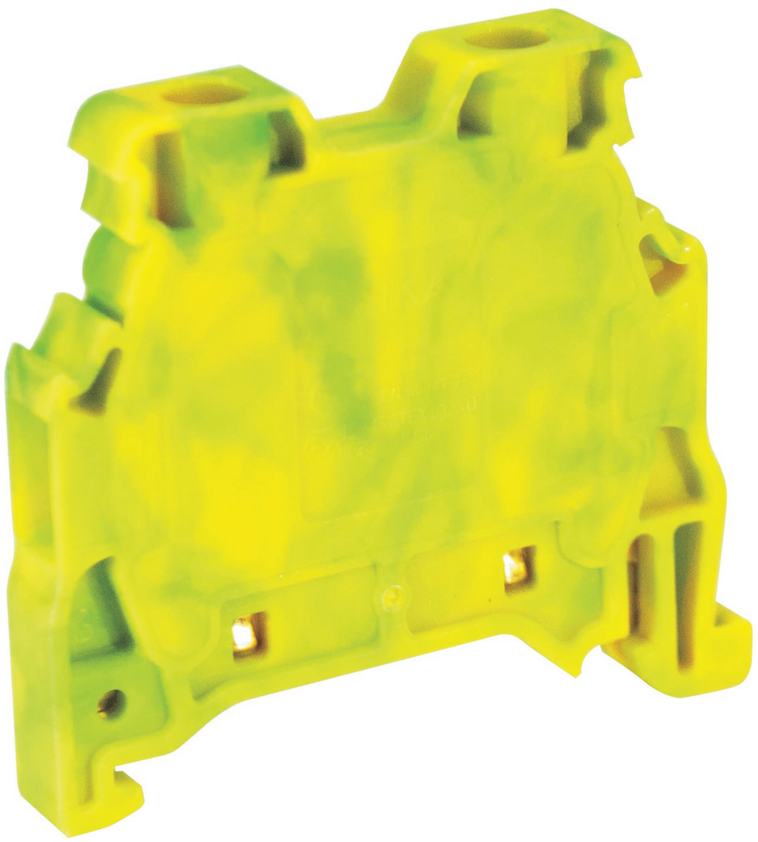

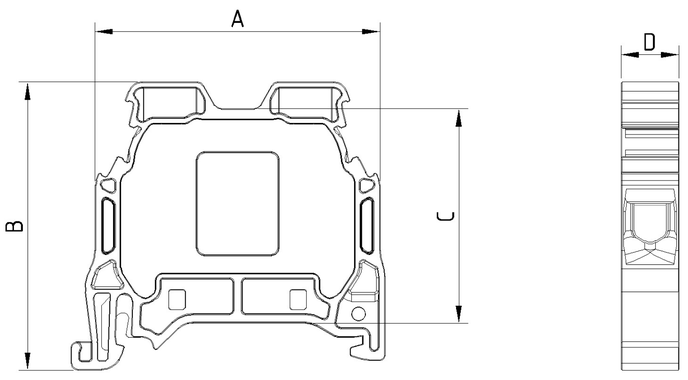

MTK 6mm² SCREW CONNECTION GROUND RAIL TERMINAL BLOCK

Product code:

Product code: 1010541

https://onka.com.tr/mtk-6mm2-screw-connection-ground-rail-terminal-block

Dimensions	
Dimensions (mm)	
A	40
B	41.3
C	30
D	8.7

Materials		
Body	PA6.6	
Bridge	Copper	
Contact	CK45 Steel	
Screw	Steel	
The Leg which contact to the Din Rail	Brass	
Temperature	-40°C,+140°C	
Cable Strip L.	12mm	
Torque	0,8Nm	
Data	TSE/CE	
Voltage	750V	
Section	6,0mm2	
Norm	EN-60947-7-2	

Stopper
Stopper–1060002, 1060005, 10600014

Sticker
Group Sticker–1060024

Marking
Marking-1060202, 1060188, 1060194, 1060200, ONKA 8943-S11