TeSys contactors

Contactors for motor control, 6 to 16 A in category AC-3 and 6 to 12 A in category AC-4

Control circuit: a.c.



LC1 K0910●●



LC1 K09103●●



LC1 K09107●●



LC1 K09105●●



LC7 K0910●●

Contactor selection according to utilisation category, see pages A5/23 to A5/27 and A5/30 to A5/33.
Mounting on 35 mm ⎓ rail or Ø4 screw fixing.
Screws in the open "ready-to-tighten" position.
Add-on auxiliary contact blocks and accessories, see pages B8/40 to B8/43.

3-pole contactors for standard applications

Standard power ratings of 3-phase motors 50-60 Hz in category AC-3			Rated operational current in category AC-3 440 V up to	Instantaneous auxiliary contacts		Basic reference, to be completed by adding the voltage code (1) (2)
220 V 230 V	380 V 415 V	440/500 V 660/690 V				
kW	kW	kW	A			
Screw clamp connections						
1.5	2.2	3	**6**	1	-	**LC1K0610●●**
				-	1	**LC1K0601●●**
2.2	4	4	**9**	1	-	**LC1K0910●●**
				-	1	**LC1K0901●●**
3	5.5	4 (> 440)	**12**	1	-	**LC1K1210●●**
		5.5 (440)		-	1	**LC1K1201●●**
4	7.5	4 (> 440)	**16**	1	-	**LC1K1610●●**
		5.5 (440)		-	1	**LC1K1601●●**

Spring terminal connections

For 6 to 12 A ratings only, in the references selected above, insert a figure **3** before the voltage code.
Example: **LC1 K0610●●** becomes **LC1 K06103●●**.

Faston connectors, 1 x 6.35 or 2 x 2.8

For 6 to 16 A ratings, in the references selected above, insert a figure **7** before the voltage code.
Example: **LC1 K0610●●** becomes **LC1 K06107●●**.

Solder pins for printed circuit boards

For 6 to 16 A ratings, in the references selected above, insert a figure **5** before the voltage code.
Example: **LC1 K0610●●** becomes **LC1 K06105●●**.

3-pole silent contactors

Recommended for use in areas sensitive to noise, high interference mains supplies, etc.
Coil with rectifier incorporated, suppressor fitted as standard.

Screw clamp connections						
1.5	2.2	3	**6**	1	-	**LC7K0610●●**
				-	1	**LC7K0601●●**
2.2	4	4	**9**	1	-	**LC7K0910●●**
				-	1	**LC7K0901●●**
3	5.5	4 (> 440)	**12**	1	-	**LC7K1210●●**
		5.5 (440)		-	1	**LC7K1201●●**

Faston connectors, 1 x 6.35 or 2 x 2.8

In the references selected above, insert a figure **7** before the voltage code.
Example: **LC7 K0610●●** becomes **LC7 K06107●●**.

Solder pins for printed circuit boards

In the references selected above, insert a figure **5** before the voltage code.
Example: **LC7 K0610●●** becomes **LC7 K06105●●**.

(1) Standard control circuit voltages (for other voltages, please consult your Regional Sales Office):

a.c. supply

Contactors LC1 K (0.8…1.15 Uc) *(0.85…1.1 Uc)*

Volts	**12**	**20**	**24** (2)	**36**	**42**	**48**	**110**	**115**	**120**	**127**	**200/208**	**220/230**	**230**	**230/240**
50/60 Hz	J7	Z7	B7	C7	D7	E7	F7	FE7	G7	FC7	L7	M7	P7	U7
Volts	**256**	**277**	**380/400**		**400**	**400/415**	**440**	**480**	**500**	**575**	**600**	**660/690**		
50/60 Hz	W7	UE7	Q7	–	V7	N7	R7	T7	S7	SC7	X7	Y7	–	–

Up to and including 240 V, coil with integral suppression device available: add **2** to the code required. Example: **J72**.

Contactors LC7 K (0.85…1.1 Uc)

Volts	**24**	**42**	**48**	**110**	**115**	**220**	**230/240**
50/60 Hz	B7	D7	E7	F7	FE7	M7	U7

(2) For mains supplies with a high level of interference (voltage surge > 800 V), use a suppressor module LA4 KE1FC (50…129 V) or LA4 KE1UG (130…250 V), see page B8/42

Contactors

TeSys contactors

Contactors for motor control, 6 to 12 A in categories AC-3 and AC-4 Control circuit: d.c. or low consumption

TeSys K



LP1 K0910●●



LP1 K09103●●



LP1 K09107●●



LP1 K09105●●



LP4 K0910●●

Contactor selection according to utilisation category, see pages A5/23 to A5/27 and A5/30 to A5/33.
Mounting on 35 mm ⎓ rail or Ø4 screw fixing.
Screws in the open "ready-to-tighten" position.
Add-on auxiliary contact blocks and accessories, see pages B8/40 to B8/43.

3-pole contactors, d.c. supply

Standard power ratings of 3-phase motors 50-60 Hz in category AC-3			Rated operational current in category AC-3 440 V up to	Instantaneous auxiliary contacts		Basic reference, to be completed by adding the voltage code (1) (2)
220 V 230 V	380 V 415 V	440/500 V 660/690 V				
kW	kW	kW	A			
Screw clamp connections						
1.5	2.2	3	**6**	1	–	**LP1K0610●●**
				–	1	**LP1K0601●●**
2.2	4	4	**9**	1	–	**LP1K0910●●**
				–	1	**LP1K0901●●**
3	5.5	4 (> 440)	**12**	1	–	**LP1K1210●●**
		5.5 (440)		–	1	**LP1K1201●●**

Spring terminal connections

In the references selected above, insert a figure **3** before the voltage code.
Example: **LP1 K0610●●** becomes **LP1 K06103●●**.

Faston connectors, 1 x 6.35 or 2 x 2.8

In the references selected above, insert a figure **7** before the voltage code.
Example: **LP1 K0610●●** becomes **LP1 K06107●●**.

Solder pins for printed circuit boards

In the references selected above, insert a figure **5** before the voltage code.
Example: **LP1 K0610●●** becomes **LP1 K06105●●**.

3-pole low consumption contactors

Compatible with programmable controller outputs.
Wide range coil (0.7…1.30 Uc), suppressor fitted as standard, consumption 1.8 W.

Screw clamp connections						
1.5	2.2	3	**6**	1	–	**LP4K0610●●**
				–	1	**LP4K0601●●**
2.2	4	4	**9**	1	–	**LP4K0910●●**
				–	1	**LP4K0901●●**
3	5.5	4 (> 440)	**12**	1	–	**LP4K1210●●**
		5.5 (440)		–	1	**LP4K1201●●**

Spring terminal connections

In the references selected above, insert a figure **3** before the voltage code.
Example: **LP4 K0610●●** becomes **LP4 K06103●●**.

Faston connectors, 1 x 6.35 or 2 x 2.8

In the references selected above, insert a figure **7** before the voltage code.
Example: **LP4 K0610●●** becomes **LP4 K06107●●**.

Solder pins for printed circuit boards

In the references selected above, insert a figure **5** before the voltage code.
Example: **LP4 K0610●●** becomes **LP4 K06105●●**.

(1) Standard control circuit voltages (for other voltages, please consult your Regional Sales Office):

d.c. supply (contactors LP1 K: 0.8...1.15 Uc)

Volts	**12**	**20**	**24** (2)	**36**	**48**	**60**	**72**	**100**	**110**	**125**	**155**	**174**	**200**	**220**	**230**	**240**	**250**
Code	JD	ZD	BD	CD	ED	ND	SD	KD	FD	GD	PD	QD	LD	MD	MPD	MUD	UD

Coil with integral suppression device available: add **3** to the code required. Example: **JD3**

Low consumption (contactors LP4 K: 0.7...130 Uc)

Volts	**12**	**20**	**24**	**48**	**72**	**110**	**120**
Code	JW3	ZW3	BW3	EW3	SW3	FW3	GW3

(2) For LP1 K only, when connecting an electronic sensor or timer in series with the contactor coil, select a 20 V coil (∼ control circuit voltage code Z7, ⎓ control circuit voltage code ZD) so as to compensate for the incurred voltage drop.

TeSys contactors

Contactors for control in category AC-1, 20 A
Control circuit: a.c.

Contactor selection according to utilisation category, see pages A5/28 and A5/29.
Mounting on 35 mm ⎓ rail or Ø4 screw fixing.
Screws in the open "ready-to-tighten" position.
Add-on auxiliary contact blocks and accessories, see pages B8/40 to B8/43.



LC1 K09004●●



LC1 K09103●●



LC1 K09107●●



LC1 K09004●●

3 or 4-pole contactors for standard applications (1)

Non-inductive loads Category AC-1 Maximum current at θ ≤ 50 °C	Number of poles		Instantaneous auxiliary contacts		Basic reference, to be completed by adding the voltage code (2) (3)
A					
Screw clamp connections					
20	3	–	1	–	**LC1K0910●●**
					or **LC1K1210●●**
	3	–	–	1	**LC1K0901●●**
					or **LC1K1201●●**
	4	–	–	–	**LC1K09004●●**
					or **LC1K12004●●**
	2	2	–	–	**LC1K09008●●**

Spring terminal connections

In the references selected above, insert a figure **3** before the voltage code.
Example: **LC1 K0910●●** becomes **LC1 K09103●●**.

Faston connectors, 1 x 6.35 or 2 x 2.8

In the references selected above, insert a figure **7** before the voltage code.
Example: **LC1 K0910●●** becomes **LC1 K09107●●**.

Solder pins for printed circuit boards

In the references selected above, insert a figure **5** before the voltage code.
Example: **LC1 K0910●●** becomes **LC1 K09105●●**.

3 or 4-pole silent contactors (1)

Recommended for use in areas sensitive to noise, high interference mains supplies, etc.
Coil with rectifier incorporated, suppressor fitted as standard.

Screw clamp connections					
20	3	–	1	–	**LC7K0910●●**
					or **LC7K1210●●**
	3	–	–	1	**LC7K0901●●**
					or **LC7K1201●●**
	4	–	–	–	**LC7K09004●●**
					or **LC7K12004●●**
	2	2	–	–	**LC7K09008●●**

Faston connectors, 1 x 6.35 or 2 x 2.8

In the references selected above, insert a figure **7** before the voltage code.
Example: **LC7 K0910●●** becomes **LC7 K09107●●**.

Solder pins for printed circuit boards

In the references selected above, insert a figure **5** before the voltage code.
Example: **LC7 K0910●●** becomes **LC7 K09105●●**.

(1) Selection between 9 and 12 A ratings according to number of operating cycles, see AC-1 curve on page A5/28.
(2) Standard control circuit voltages (for other voltages, please consult your Regional Sales Office):

a.c. supply

Contactors LC1 K (0.8…1.15 Uc) *(0.85…1.1 Uc)*

Volts	**12**	**20**	**24** (3)	**36**	**42**	**48**	**110**	**115**	**120**	**127**	**200/208**		***220/230***	**230**	***230/240***
50/60 Hz	J7	Z7	B7	C7	D7	E7	F7	FE7	G7	FC7	L7		*M7*	P7	*U7*
Volts	**256**	**277**	***380/400***		**400**	***400/415***		**440**	**480**	**500**	**575**	**600**	***660/690***		
50/60 Hz	W7	UE7	*Q7*		V7	*N7*		R7	T7	S7	SC7	X7	*Y7*		

Up to and including 240 V, coil with integral suppression device available: add **2** to the code required. Example: **J72.**

Contactors LC7 K (0.8…1.1 Uc)

Volts	**24**	**42**	**48**	**110**	**115**	**220**	**230/240**
50/60 Hz	B7	D7	E7	F7	FE7	M7	U7

(3) For mains supplies with a high level of interference (voltage surge > 800 V), use a suppressor module LA4 KE1FC (50…129 V) or LA4 KE1UG (130…250 V), see page B8/42.

Contactors

TeSys contactors

Contactors for control in category AC-1, 20 A

Control circuit: d.c. or low consumption

PF511142R.eps



LC1 K09004●●

PF511143R.eps



LC1 K09103●●

PF511144R.eps



LC1 K09105●●

PF511141R.eps



LC1 K09004●●

Contactor selection according to utilisation category, see pages A5/28 and A5/29.
Mounting on 35 mm ⎓ rail or Ø4 screw fixing.
Screws in the open "ready-to-tighten" position.
Add-on auxiliary contact blocks and accessories, see pages B8/40 to B8/43.

3 and 4-pole contactors, d.c. supply (1)

Non-inductive loads Category AC-1 Maximum current at θ ≤ 50 °C	Number of poles		Instantaneous auxiliary contacts		Basic reference, to be completed by adding the voltage code (2) (3)
A					
Screw clamp connections					
20	3	–	1	–	**LP1K0910●●**
					or **LP1K1210●●**
	3	–	–	1	**LP1K0901●●**
					or **LP1K1201●●**
	4	–	–	–	**LP1K09004●●**
					or **LP1K12004●●**
	2	2	–	–	**LP1K09008●●**

Spring terminal connections

In the references selected above, insert a figure **3** before the voltage code.
Example: **LP1 K0910●●** becomes **LP1 K09103●●**.

Faston connectors, 1 x 6.35 or 2 x 2.8

In the references selected above, insert a figure **7** before the voltage code.
Example: **LP1 K0910●●** becomes **LP1 K09107●●**.

Solder pins for printed circuit boards

In the references selected above, insert a figure **5** before the voltage code.
Example: **LP1 K0910●●** becomes **LP1 K09105●●**.

3 or 4-pole low consumption contactors (1)

Compatible with programmable controller outputs.
Wide range coil (0.7…1.30 Uc), suppressor fitted as standard, consumption 1.8 W.

Screw clamp connections					
20	3	–	1	–	**LP4K0910●●●**
					or **LP4K1210●●●**
	3	–	–	1	**LP4K0901●●●**
					or **LP4K1201●●●**
	4	–	–	–	**LP4K09004●●●**
					or **LP4K12004●●●**
	2	2	–	–	**LP4K09008●●●**

Spring terminal connections

In the references selected above, insert a figure **3** before the voltage code.
Example: **LP4 K0910●●** becomes **LP4 K09103●●**.

Faston connectors, 1 x 6.35 or 2 x 2.8

In the references selected above, insert a figure **7** before the voltage code.
Example: **LP4 K0910●●** becomes **LP4 K09107●●**.

Solder pins for printed circuit boards

In the references selected above, insert a figure **5** before the voltage code.
Example: **LP4 K0910●●** becomes **LP4 K09105●●**.

(1) Selection between 9 and 12 A ratings according to number of operating cycles, see AC-1 curve on page A5/28.
(2) Standard control circuit voltages (for other voltages, please consult your Regional Sales Office):

d.c. supply (contactors LP1 K: 0.8...1.15 Uc)

Volts ⎓	12	20	24 (3)	36	48	60	72	100	110	125	155	174	200	220	230	240	250
Code	JD	ZD	BD	CD	ED	ND	SD	KD	FD	GD	PD	QD	LD	MD	MPD	MUD	UD

Coil with integral suppression device available: add **3** to the code required. Example: **JD3.**

Low consumption (contactors LP4 K: 0.7...130 Uc)

Volts ⎓	12	20	24	48	72	110	120
Code	JW3	ZW3	BW3	EW3	SW3	FW3	GW3

(3) For LP1 K only, when connecting an electronic sensor or timer in series with the contactor coil, select a 20 V coil (∿ control circuit voltage code Z7, ⎓ control circuit voltage code ZD) so as to compensate for the incurred voltage drop.

TeSys contactors

Reversing contactors for motor control, 6 to 16 A in category AC-3 and 6 to 12 A in category AC-4

Control circuit: a.c.

Reversing contactor selection according to utilisation category, see pages A5/23 to A5/27 and A5/30 to A5/33.
Integral mechanical interlock.
It is essential to link the contacts of the electrical interlock.
Pre-wired power circuit connections as standard on screw clamp versions.
Mounting on 35 mm ⎓ rail or Ø4 screw fixing. Screws in the open "ready-to-tighten" position.
Add-on auxiliary contact blocks and accessories, see pages B8/40 to B8/43.



PF511147R.eps

LC2 K0910●●



PF511148R.eps

LC2 K09105●●

3-pole reversing contactors for standard applications

Standard power ratings of 3-phase motors 50/60 Hz in category AC-3			Rated operational current in category AC-3 440 V up to	Instantaneous auxiliary contacts per contactor		Basic reference, to be completed by adding the voltage code (1) (2)
220 V 230 V	380 V 415 V	440/500 V 660/690 V				
kW	kW	kW	A			
Screw clamp connections						
1.5	2.2	3	**6**	1	–	**LC2K0610●●**
				–	1	**LC2K0601●●**
2.2	4	4	**9**	1	–	**LC2K0910●●**
				–	1	**LC2K0901●●**
3	5.5	4 (> 440)	**12**	1	–	**LC2K1210●●**
		5.5 (440)		–	1	**LC2K1201●●**
4	7.5	4 (> 440)	**16**	1	–	**LC2K1610●●**
		5.5 (440)		–	1	**LC2K1601●●**

Spring terminal connections

For 6 to 12 A ratings only, in the references selected above, insert a figure **3** before the voltage code.
Example: **LC2 K0610●●** becomes **LC2 K06103●●**.

Faston connectors, 1 x 6.35 or 2 x 2.8

For 6 to 16 A ratings, in the references selected above, insert a figure **7** before the voltage code.
Example: **LC2 K0610●●** becomes **LC2 K06107●●**.

Solder pins for printed circuit boards

For 6 to 16 A ratings, in the references selected above, insert a figure **5** before the voltage code.
Example: **LC2 K0610●●** becomes **LC2 K06105●●**.

3-pole silent reversing contactors

Recommended for use in areas sensitive to noise, high interference mains supplies, etc.
Coil with rectifier incorporated, suppressor fitted as standard.

Screw clamp connections						
1.5	2.2	3	**6**	1	–	**LC8K0610●●**
				–	1	**LC8K0601●●**
2.2	4	4	**9**	1	–	**LC8K0910●●**
				–	1	**LC8K0901●●**
3	5.5	4 (> 440)	**12**	1	–	**LC8K1210●●**
		5.5 (440)		–	1	**LC8K1201●●**

Faston connectors, 1 x 6.35 or 2 x 2.8

In the references selected above, insert a figure **7** before the voltage code.
Example: **LC8 K0610●●** becomes **LC8 K06107●●**.

Solder pins for printed circuit boards

In the references selected above, insert a figure **5** before the voltage code.
Example: **LC8 K0610●●** becomes **LC8 K06105●●**.

(1) Standard control circuit voltages (for other voltages, please consult your Regional Sales Office):

a.c. supply

Reversing contactors LC2 K (0.8…1.15 Uc) *(0.85…1.1 Uc)*

Volts	**12**	**20**	**24** (2)	**36**	**42**	**48**	**110**	**115**	**120**	**127**	**200/208**		***220/230***	**230**	***230/240***
50/60 Hz	J7	Z7	B7	C7	D7	E7	F7	FE7	G7	FC7	L7		*M7*	P7	U7
Volts	**256**	**277**	***380/400***		**400**	***400/415***		**440**	**480**	**500**	**575**	**600**	***660/690***		
50/60 Hz	W7	UE7	Q7		V7	*N7*		R7	T7	S7	SC7	X7	*Y7*		

Up to and including 240 V, coil with integral suppression device available: add **2** to the code required. Example: **J72.**

Reversing contactors LC8 K (0.8…1.1 Uc)

Volts	**24**	**42**	**48**	**110**	**115**	**220**	**230/240**
50/60 Hz	B7	D7	E7	F7	FE7	M7	U7

(2) For mains supplies with a high level of interference (voltage surge > 800 V), use a suppressor module LA4 KE1FC (50…129 V) or LA4 KE1UG (130…250 V), see page B8/42.

Contactors

TeSys contactors

Reversing contactors for motor control, 6 to 12 A in categories AC-3 and AC-4

Control circuit: d.c. or low consumption

Reversing contactor selection according to utilisation category, see pages A5/23 to A5/27 and A5/30 to A5/33.
Integral mechanical interlock.
It is essential to link the contacts of the electrical interlock.
Pre-wired power circuit connections as standard on screw clamp versions.
Mounting on 35 mm ⎍ rail or Ø4 screw fixing.
Screws in the open "ready-to-tighten" position.
Add-on auxiliary contact blocks and accessories, see pages B8/40 to B8/43.

3-pole reversing contactors, d.c. supply

Standard power ratings of 3-phase motors 50-60 Hz in category AC-3			Rated operational current in category AC-3 440 V up to	Instan-taneous auxiliary contacts per contactor		Basic reference, to be completed by adding the voltage code (1) (2)
220 V 230 V	380 V 415 V	440/500 V 660/690 V				
kW	kW	kW	A			
Screw clamp connections						
1.5	2.2	3	6	1	–	**LP2K0610●●**
				–	1	**LP2K0601●●**
2.2	4	4	9	1	–	**LP2K0910●●**
				–	1	**LP2K0901●●**
3	5.5	4 (> 440)	12	1	–	**LP2K1210●●**
		5.5 (440)		–	1	**LP2K1201●●**

Spring terminal connections

In the references selected above, insert a figure **3** before the voltage code.
Example: **LP2 K0610●●** becomes **LP2 K06103●●**.

Faston connectors, 1 x 6.35 or 2 x 2.8

In the references selected above, insert a figure **7** before the voltage code.
Example: **LC2 K0610●●** becomes **LC2 K06107●●**.

Solder pins for printed circuit boards

For 6 to 16 A ratings, in the references selected above, insert a figure **5** before the voltage code.
Example: **LC2 K0610●●** becomes **LC2 K06105●●**.

3-pole low consumption reversing contactors

Compatible with programmable controller outputs.
Wide range coil (0.7…1.30 Uc), suppressor fitted as standard, consumption 1.8 W.

Screw clamp connections						
1.5	2.2	3	6	1	–	**LP5K0610●●**
				–	1	**LP5K0601●●**
2.2	4	4	9	1	–	**LP5K0910●●**
				–	1	**LP5K0901●●**
3	5.5	4 (> 440)	12	1	–	**LP5K1210●●**
		5.5 (440)		–	1	**LP5K1201●●**

Spring terminal connections

In the references selected above, insert a figure **3** before the voltage code.
Example: **LP5 K0610●●** becomes **LP5 K06103●●**.

Faston connectors, 1 x 6.35 or 2 x 2.8

In the references selected above, insert a figure **7** before the voltage code.
Example: **LP5 K0610●●** becomes **LP5 K06107●●**.

Solder pins for printed circuit boards

In the references selected above, insert a figure **5** before the voltage code.
Example: **LP5 K0610●●** becomes **LP5 K06105●●**.

(1) Standard control circuit voltages (for other voltages, please consult your Regional Sales Office):

d.c. supply

Reversing contactors LP2 K (0.8…1.15 Uc)

Volts	12	20	24 (2)	36	48	60	72	100	110	125	155	174	200	220	230	240	250
Code	JD	ZD	BD	CD	ED	ND	SD	KD	FD	GD	PD	QD	LD	MD	MPD	MUD	UD

Coil with integral suppression device available: add **3** to the code required. Example: **JD3**.

Low consumption

Reversing contactors LP5 K (0.7…1.30 Uc)

Volts	12	20	24	48	72	110	120
Code	JW3	ZW3	BW3	EW3	SW3	FW3	GW3

(2) For LP2 K only, when connecting an electronic sensor or timer in series with the contactor coil, select a 20 V coil (∼ control circuit voltage code Z7, ⎓ control circuit voltage code ZD) so as to compensate for the incurred voltage drop.

Selection: pages A5/23 and A5/33 | Characteristics: pages B8/81 to B8/84 | Dimensions: page B8/85 | Schemes: page B8/86

TeSys contactors

Reversing contactors for control in category AC-1, 20 A

Control circuit: a.c.

Warning: reversing contactors LC2 K0910●● and LC2 K0901●● are pre-wired for reverse motor operation as standard.
Reversing contactor selection according to utilisation category, see pages A5/28 and A5/29.
Integral mechanical interlock.
It is essential to link the contacts of the electrical interlock.
Mounting on 35 mm ⎓ rail or Ø4 screw fixing.
Screws in the open "ready-to-tighten" position.
Add-on auxiliary contact blocks and accessories, see pages B8/40 to B8/43.

PF511150R.eps



LC2 K0910●●

3 or 4-pole reversing contacts for standard applications (1)

Non-inductive loads Category AC-1 Maximum current at θ ≤ 50 °C	Number of poles		Instantaneous auxiliary contacts per contactor			Basic reference, to be completed by adding the voltage code (2) (3)
	d	b				
A						
Screw clamp connections						
20	3	–	1	–		**LC2K0910●●**
					or	**LC2K1210●●**
	3	–	–	1		**LC2K0901●●**
					or	**LC2K1201●●**
	4	–	–	–		**LC2K09004●●**
					or	**LC2K12004●●**

PF511151R.eps



LC2 K09105●●

Spring terminal connections

In the references selected above, insert a figure **3** before the voltage code.
Example: **LC2 K0910●●** becomes **LC2 K09103●●**.

Faston connectors, 1 x 6.35 or 2 x 2.8

In the references selected above, insert a figure **7** before the voltage code.
Example: **LC2 K0910●●** becomes **LC2 K09107●●**.

Solder pins for printed circuit boards

In the references selected above, insert a figure **5** before the voltage code.
Example: **LC2 K0910●●** becomes **LC2 K09105●●**.

3 or 4-pole silent reversing contactors (1)

Recommended for use in areas sensitive to noise, high interference mains supplies, etc.
Coil with rectifier incorporated, suppressor fitted as standard.

PF511152R.eps



LC2 K09004●●

Screw clamp connections						
20	3	–	1	–		**LC8K0910●●**
					or	**LC8K1210●●**
	3	–	–	1		**LC8K0901●●**
					or	**LC8K1201●●**
	4	–	–	–		**LC8K09004●●**
					or	**LC8K12004●●**

Faston connectors, 1 x 6.35 or 2 x 2.8

In the references selected above, insert a figure **7** before the voltage code.
Example: **LC8 K0910●●** becomes **LC8 K09107●●**.

Solder pins for printed circuit boards

In the references selected above, insert a figure **5** before the voltage code.
Example: **LC8 K0910●●** becomes **LC8 K09105●●**.

(1) Selection between 9 and 12 A ratings according to number of operating cycles, see AC-1 curve on page A5/28.
(2) Standard control circuit voltages (for other voltages, please consult your Regional Sales Office):

a.c. supply

Reversing contactors LC2 K (0.8…1.15 Uc) *(0.85…1.1 Uc)*

Volts	**12**	**20**	**24** (3)	**36**	**42**	**48**	**110**	**115**	**120**	**127**	**200/208**		***220/230***	***230***	***230/240***
50/60 Hz	J7	Z7	B7	C7	D7	E7	F7	FE7	G7	FC7	L7		*M7*	*P7*	*U7*
Volts	**256**	**277**	***380/400***		**400**	***400/415***		**440**	**480**	**500**	**575**	**600**	***660/690***		
50/60 Hz	W7	UE7	*Q7*		V7	*N7*		R7	T7	S7	SC7	X7	*Y7*		

Up to and including 240 V, coil with integral suppression device available: add **2** to the code required. Example: **J72**.

Reversing contactors LC8 K (0.8…1.1 Uc)

Volts	**24**	**42**	**48**	**110**	**115**	**220**	**230/240**
50/60 Hz	B7	D7	E7	F7	FE7	M7	U7

(3) For mains supplies with a high level of interference (voltage surge > 800 V), use a suppressor module LA4 KE1FC (50…129 V) or LA4 KE1UG (130…250 V), see page B8/42.

Contactors

TeSys contactors

Reversing contactors for control in category AC-1, 20 A

Control circuit: d.c. or low consumption

Warning: reversing contactors LP2 K0910●● and LP2 K0901●● are pre-wired for reverse motor operation as standard.
Reversing contactor selection according to utilisation category, see pages A5/28 and A5/29.
Integral mechanical interlock.
It is essential to link the contacts of the electrical interlock.
Mounting on 35 mm ⎓ rail or Ø4 screw fixing.
Screws in the open "ready-to-tighten" position.
Add-on auxiliary contact blocks and accessories, see pages B8/40 to B8/43.

3 or 4-pole reversing contactors, d.c. supply (1)

Non-inductive loads Category AC-1 Maximum current at θ ≤ 50 °C	Number of poles		Instantaneous auxiliary contacts per contactor			Basic reference, to be completed by adding the voltage code (2) (3)
						
A						
Screw clamp connections						
20	3	–	1	–		**LP2K0910●●**
					or	**LP2K1210●●**
	3	–	–	1		**LP2K0901●●**
					or	**LP2K1201●●**
	4	–	–	–		**LP2K09004●●**
					or	**LP2K12004●●**

Spring terminal connections
In the references selected above, insert a figure **3** before the voltage code.
Example: **LP2 K0910●●** becomes **LP2 K09103●●**.

Faston connectors, 1 x 6.35 or 2 x 2.8
In the references selected above, insert a figure **7** before the voltage code.
Example: **LP2 K0910●●** becomes **LP2 K09107●●**.

Solder pins for printed circuit boards
In the references selected above, insert a figure **5** before the voltage code.
Example: **LP2 K0910●●** becomes **LP2 K09105●●**.

3 or 4-pole low consumption reversing contactors (1)

Compatible with programmable controller outputs.
Wide range coil (0.7…1.30 Uc), suppressor fitted as standard, consumption 1.8 W.

Screw clamp connections

20	3	–	1	–		**LP5K0910●●●**
					or	**LP5K1210●●●**
	3	–	–	1		**LP5K0901●●●**
					or	**LP5K1201●●●**
	4	–	–	–		**LP5K09004●●●**
					or	**LP5K12004●●●**

Spring terminal connections
In the references selected above, insert a figure **3** before the voltage code.
Example: **LP5 K0910●●** becomes **LP5 K09103●●**.

Faston connectors, 1 x 6.35 or 2 x 2.8
In the references selected above, insert a figure **7** before the voltage code.
Example: **LP5 K0910●●** becomes **LP5 K09107●●**.

Solder pins for printed circuit boards
In the references selected above, insert a figure **5** before the voltage code.
Example: **LP5 K0910●●** becomes **LP5 K09105●●**.

(1) Selection between 9 and 12 A ratings according to number of operating cycles, see AC-1 curve on page A5/28.
(2) Standard control circuit voltages (for other voltages, please consult your Regional Sales Office):

d.c. supply (reversing contactors LP2 K: 0.8…1.15 Uc)

Volts ⎓	12	20	24 (3)	36	48	60	72	100	110	125	155	174	200	220	230	240	250
Code	JD	ZD	BD	CD	ED	ND	SD	KD	FD	GD	PD	QD	LD	MD	MPD	MUD	UD

Coil with integral suppression device available: add **3** to the code required. Example: **JD3**.

Low consumption (reversing contactors LP5 K: 0.7…130 Uc)

Volts ⎓	12	20	24	48	72	110	120
Code	JW3	ZW3	BW3	EW3	SW3	FW3	GW3

(3) For LP2 K only, when connecting an electronic sensor or timer in series with the contactor coil, select a 20 V coil (∼ control circuit voltage code Z7, ⎓ control circuit voltage code ZD) so as to compensate for the incurred voltage drop.

Selection: pages A5/28 and A5/29
Characteristics: pages B8/81 to B8/84
Dimensions: page B8/85
Schemes: page B8/86

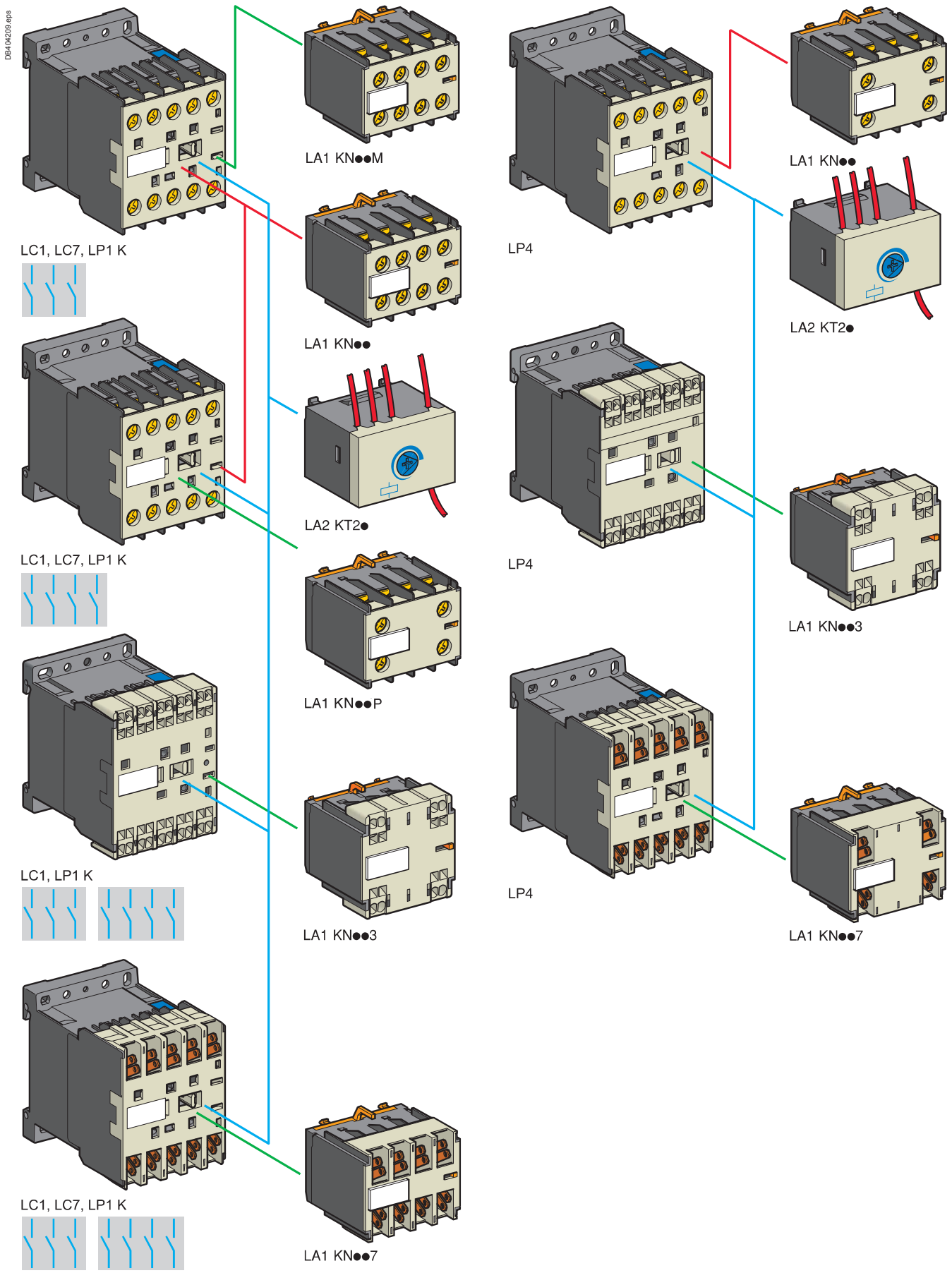
DB404209.eps
LC1, LC7, LP1 K
LA1 KN●●M
LA1 KN●●
LA2 KT2●
LC1, LC7, LP1 K
LA2 KT2●
LA1 KN●●P
LC1, LP1 K
LA1 KN●●3
LC1, LC7, LP1 K
LA1 KN●●7
LP4
LA1 KN●●
LP4
LA1 KN●●3
LP4
LA1 KN●●7

TeSys contactors

TeSys K contactors and reversing contactors

Auxiliary contact blocks

Instantaneous auxiliary contact blocks

Recommended for standard applications. Clip-on front mounting, 1 block per contactor

Connection	For use on contactors	Composition		Reference
		⊣	⊢	
Screw clamp terminals	All products with screw clamp terminals	2	–	**LA1KN20**
		–	2	**LA1KN02**
		1	1	**LA1KN11**
	All products with screw clamp terminals except low consumption	4	–	**LA1KN40**
		3	1	**LA1KN31**
		2	2	**LA1KN22**
		1	3	**LA1KN13**
		–	4	**LA1KN04**
Spring terminals	All products with spring terminals	2	–	**LA1KN203**
		–	2	**LA1KN023**
		1	1	**LA1KN113**
	All products with spring terminals except low consumption	4	–	**LA1KN403**
		3	1	**LA1KN313**
		2	2	**LA1KN223**
		1	3	**LA1KN133**
		–	4	**LA1KN043**
Faston connectors, 1 x 6.35 or 2 x 2.8	All products with Faston connectors	2	–	**LA1KN207**
		–	2	**LA1KN027**
		1	1	**LA1KN117**
	All products with Faston connectors except low consumption	4	–	**LA1KN407**
		3	1	**LA1KN317**
		2	2	**LA1KN227**
		1	3	**LA1KN137**
		–	4	**LA1KN047**

With terminal referencing to standard EN 50012. Clip-on front mounting, 1 block per contactor

Screw clamp terminals with referencing conforming to standard EN 50012	All 3-pole + N/O products with screw clamp terminals except LP4 and LP5 K12	–	2	**LA1KN02M**
		1	1	**LA1KN11M**
	All 3-pole + N/O products with screw clamp terminals except LP4 or LP5 K06, K09 and K12	3	1	**LA1KN31M**
		2	2	**LA1KN22M**
		1	3	**LA1KN13M**
	All 4-pole products with screw clamp terminals except LP4 or LP5 K12	1	1	**LA1KN11P**
	All 4-pole products with screw clamp terminals except LP4 or LP5 K09 and K12	2	2	**LA1KN22P**

Electronic time delay auxiliary contact blocks

Relay output with common point changeover contact, ∼ or ⎓ 240 V, 2 A maximum.
Control voltage 0.85…1.1 Uc.
Maximum switching capacity 250 VA or 150 W.
Operating temperature -10…+60 °C.
Reset time: 1.5 s during the time delay period, 0.5 s after the time delay period.

Clip-on front mounting, 1 block per contactor

Voltage	Type	Timing range	Composition	Reference
			⊢	
V		s		
∼ or ⎓ 24…48	On-delay	1…30	1	**LA2KT2E**
∼ 110…240	On-delay	1…30	1	**LA2KT2U**

Contactors

Characteristics: page B8/84
Dimensions: pages B8/85 and B8/87
Schemes: pages B8/86 and B8/88

TeSys contactors

TeSys K contactors and reversing contactors

Suppressor modules incorporating LED indicator

DF565018.eps

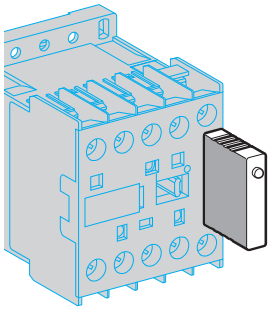

LA4 K●●●

References

Mounting and connection	Type	For voltages	Sold in lots of	Unit reference
Clip-on fixing on the front of contactors LC1 and LP1, with locating device. No tools required.	Varistor (1)	∼ and ⎓ 12…24 V	5	**LA4KE1B**
		∼ and ⎓ 32…48 V	5	**LA4KE1E**
		∼ and ⎓ 50…129 V	5	**LA4KE1FC**
		∼ and ⎓ 130…250 V	5	**LA4KE1UG**
	Diode + Zener diode (2)	⎓ 12…24 V	5	**LA4KC1B**
		⎓ 32…48 V	5	**LA4KC1E**
	RC (3)	∼ 110…250 V	5	**LA4KA1U**

(1) Protection provided by limiting the transient voltage to 2 Uc max.
Maximum reduction of transient voltage peaks.
Slight increase in drop-out time (1.1 to 1.5 times the normal time).
(2) No overvoltage or oscillating frequency.
Polarised component.
Slight increase in drop-out time (1.1 to 1.5 times the normal time).
(3) Protection by limiting the transient voltage to 3 Uc max. and limitation of the oscillating frequency.
Slight increase in drop-out time (1.2 to 2 times the normal time).

Characteristics: page B8/84
Dimensions: pages B8/85 and B8/87
Schemes: pages B8/86 and B8/88

TeSys contactors
TeSys K contactors and reversing contactors
Accessories

DF566019.eps

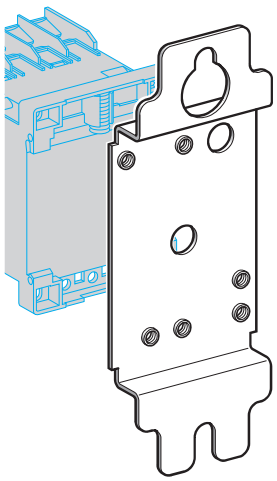

DX1 AP25

Mounting and marking accessories

Description	Application		Sold in lots of	Unit reference
Mounting plates (1)	For fixing on 1 ⊔ rail	Clip-on	1	**LA9D973**
	For fixing on 2 ⊔ rails	110/120 mm fixing centres	10	**DX1AP25**
Marker holder	Clip-on	Onto front of contactor	100	**LA9D90**
Clip-in markers	4 maximum per contactor	Strips of 10 identical numbers 0…9	25	**AB1R●** (2)
		Strips of 10 identical letters A…Z	25	**AB1G●** (2)

DF566020.eps

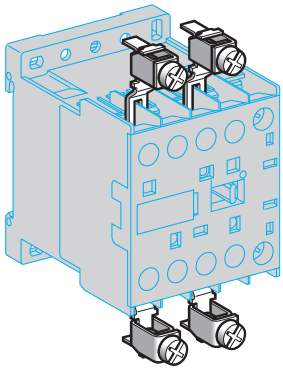

LA9 E01

Connection accessories

Description	Application		Sold in lots of	Unit preference
Paralleling links	For 2 poles	With screw clamps	4	**LA9E01**
	For 4 poles	With screw clamps	2	**LA9E02**
Set of 6 power connections	For 3-pole reversing contactors for motor control	For contactors with screw clamp terminals	100	**LA9K0969**
Set of 4 power connections	For 4-pole changeover contactor pairs	For contactors with screw clamp terminals	100	**LA9K0970**

(1) Order 1 mounting plate for fixing a contactor and 2 mounting plates for fixing a reversing contactor.
(2) Complete the reference by replacing the dot with the required character.

TeSys contactors

Mini-contactors TeSys LC1 SKGC, for use in modular panels

TeSys SKGC

- Mounting on 35 mm ⎓ rail or fixing by four Ø4 screws, except for LC1 SKGC200.
- Connection by connectors.
- Mini-contactor fitted with transparent, sealable protective cover to prevent front face access.

PF511135R.eps



LC1 SKGC200

Mini-contactors, width 27 mm

Standard power ratings of 3-phase motors 50/60 Hz in category AC-3			Rated operational current in AC-3 up to 400 V	Non inductive loads category AC-1 maximum current θ ≤ 50 °C	No. of poles			Basic reference, to be completed by adding the voltage code (1)
220 V 230 V	380 V 415 V	660 V 690 V						
kW	kW	kW	A	A				
–	–	–	5	20	2	–	–	**LC1SKGC200●●**

PF511136R.eps



LC1 SKGC400

Mini-contactors, width 45 mm

Standard power ratings of 3-phase motors 50/60 Hz in category AC-3			Rated operational current in AC-3 up to 400 V	Non inductive loads category AC-1 maximum current θ ≤ 50 °C	No. of poles			Basic reference, to be completed by adding the voltage code (1)
220 V 230 V	380 V 415 V	660 V 690 V						
kW	kW	kW	A	A				
1.1	4	4	9	20	3	1	–	**LC1SKGC310●●**
					3	–	1	**LC1SKGC301●●**
					4	–	–	**LC1SKGC400●●**

(1) Standard control circuit voltages (for other voltages, please consult your Regional Sales Office):

Volts ~ 50/60 Hz	24	48	110	120	220	230	240	380	400
Code	B7	E7	F7	G7	M7	P7	U7	Q7	V7

Characteristics: pages B8/89 to B8/92
Dimensions, schemes: page B8/93

TeSys contactors

Mini-contactors TeSys LC1 SKGC, for use in modular panels

Suppressor modules

PF611134R.eps



LA4 SK●1●

Suppressor modules

Connection without need for tools by clipping onto right-hand side of contactor

For use on contactors	Type	For voltages	Sold in lots of	Unit reference
LC1SKGC	Varistor (1)	~ and ⎓ 24…48 V	10	**LA4SKE1E**
		~ and ⎓ 110…250 V	10	**LA4SKE1U**
	Diode (2)	⎓ 24…250 V	10	**LA4SKC1U**

(1) Protection provided by limiting the transient voltage to 2 Uc max.
Maximum reduction of transient voltage peaks.
Slight increase in drop-out time (1.1 to 1.5 times the normal time).
(2) No overvoltage or oscillating frequency.
Slight increase in drop-out time (1.1 to 1.5 times the normal time).

Characteristics: pages B8/89 to B8/92
Dimensions, schemes: page B8/93