

Goobay

3.5 mm jack extension cable

3.5 mm male (3-pin, stereo) > 3.5 mm female (3-pin, stereo)

- coiled cable

5.00 m	50017	Bulk



Goobay

3.5 mm jack extension cable

3.5 mm male (3-pin, stereo) > 3.5 mm female (3-pin, stereo)

2.00 m	50431	Bulk
3.00 m	50432	Bulk
5.00 m	50090	Bulk
10.00 m	50935	Bulk



Goobay

6.35 mm jack extension cable

6.35 mm male (3-pin, stereo) > 6.35 mm female (3-pin, stereo)

- coiled cable

5.00 m	50016	Bulk



Goobay

6.35 mm jack extension cable

6.35 mm male (3-pin, stereo) > 6.35 mm female (3-pin, stereo)

5.00 m	50428	Bulk

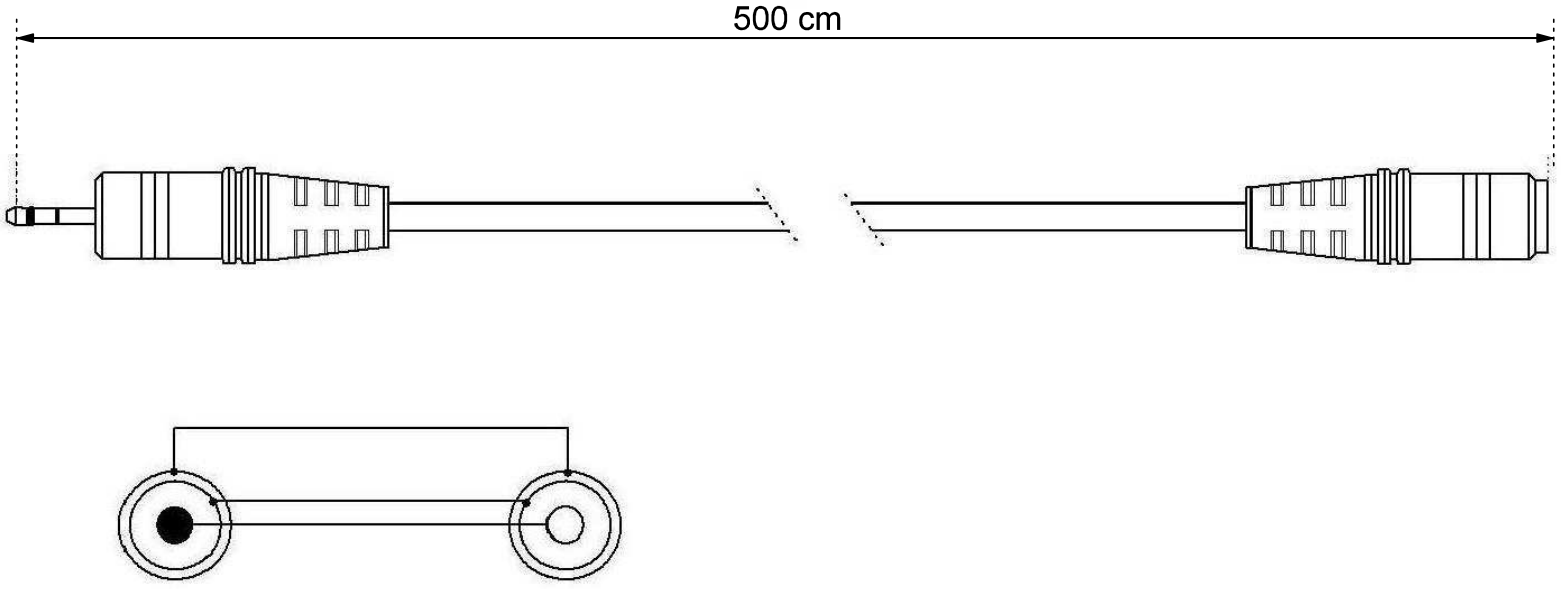



- Audio-Video-Kabel 5,0 m; lose Ware
- 3,5 mm Stereo-Stecker --- 3,5 mm Stereo-Kupplung
- Kabeldurchmesser : 4,0 mm
- RoHS-konform

- audio video cable 5.0 m ; bulk
- 3.5 mm stereo plug --- 3.5 mm stereo jack
- cable diameter: 4.0 mm
- RoHS-compliant

Änderungen			Datum	Name
Datum	Name	gez.:	07.09.2010	li
		gepr.:	07.09.2010	li
		Norm:		

Bezeichnung: AVK 181-500

wentronic

Zeichnungs-Nr.: 50090

Blatt

von