EN Hex key set
PL Zestaw kluczy imbusowych
DE Sechskant-Stiftschlüsselsatz
RU Набор шестигранных ключей
CZ Sada imbusových klíčů
HU Imbuszkulcs készlet
RO Set chei imbus
FR Jeu de clés hexagonales
IT Set di chiavi a brugola
ES Juego de llaves hexagonales
CN 内六角扳手组套

12 PCS | SAE | CrV 6150

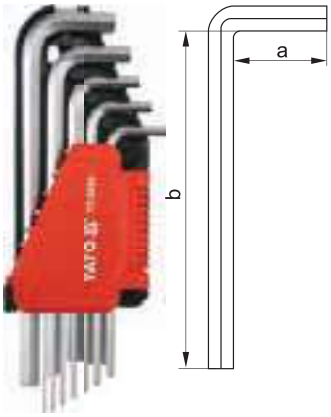

LONG DŁUGI

YATO	◎	a [mm]	b [mm]	
YT-5835	1/16" (1.6 mm), 5/64" (2.0 mm), 3/32" (2.4 mm), 7/64" (2.8 mm), 1/8" (3.2 mm), 9/64" (3.6 mm), 5/32" (4.0 mm), 3/16" (4.8 mm), 7/32" (5.6 mm), 1/4" (6.3 mm), 5/16" (7.9 mm), 3/8" (9.5 mm)	14, 16, 17, 18, 19, 20, 21, 24, 25, 28, 32, 35	74, 79, 83, 88, 93, 99, 105, 113, 122, 132, 150, 170	6/36

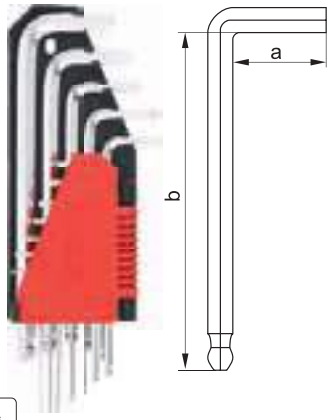

25° | LONG DŁUGI

YATO	◎	a [mm]	b [mm]	
YT-5837	1/16" (1.6 mm), 5/64" (2.0 mm), 3/32" (2.4 mm), 7/64" (2.8 mm), 1/8" (3.2 mm), 9/64" (3.6 mm), 5/32" (4.0 mm), 3/16" (4.8 mm), 7/32" (5.6 mm), 1/4" (6.3 mm), 5/16" (7.9 mm), 3/8" (9.5 mm)	14, 16, 17, 18, 19, 20, 21, 24, 25, 28, 32, 35	74, 79, 83, 88, 93, 99, 105, 113, 122, 132, 150, 170	6/36

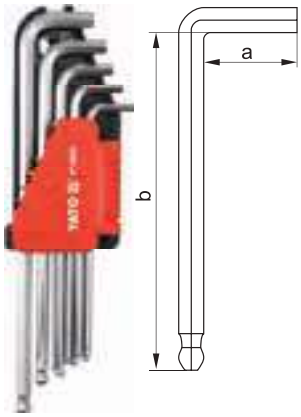

25° | EXTRA LONG EKSTRA-DŁUGI

YATO	◎	a [mm]	b [mm]	
YT-5838	1/16" (1.6 mm), 5/64" (2.0 mm), 3/32" (2.4 mm), 7/64" (2.8 mm), 1/8" (3.2 mm), 9/64" (3.6 mm), 5/32" (4.0 mm), 3/16" (4.8 mm), 7/32" (5.6 mm), 1/4" (6.3 mm), 5/16" (7.9 mm), 3/8" (9.5 mm)	14, 16, 17, 18, 19, 20, 21, 24, 25, 28, 32, 35	91, 100, 110, 116, 123, 130, 132, 150, 165, 185, 200, 233	6/36

EN Hex key set
PL Zestaw kluczy imbusowych
DE Sechskant-Stiftschlüsselsatz
RU Набор шестигранных ключей
CZ Sada imbusových klíčů
HU Imbuszkulcs készlet
RO Set chei imbus
FR Jeu de clés hexagonales
IT Set di chiavi a brugola
ES Juego de llaves hexagonales
CN 内六角扳手组套

HRC 52-56 | CrV 6150

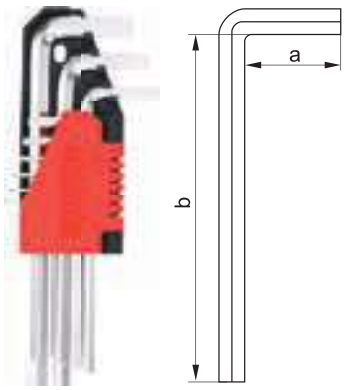

9 PCS

YATO	◎ [mm]	a [mm]	b [mm]	
YT-0500	1.5, 2, 2.5, 3, 4, 5, 6, 8, 10	15, 16, 18, 21, 23, 28, 31, 35, 39	74, 81, 88, 95, 109, 121, 135, 157, 174	6/36

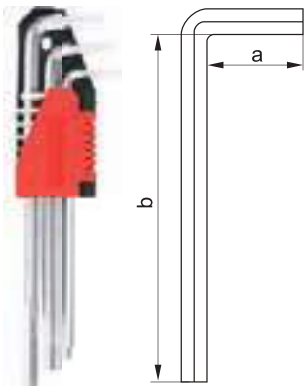

9 PCS

YATO	◎ [mm]	a [mm]	b [mm]	
YT-0501	1.5, 2, 2.5, 3, 4, 5, 6, 8, 10	15, 16, 18, 21, 23, 28, 31, 35, 39	90, 96, 112, 125, 142, 157, 180, 201, 225	6/36

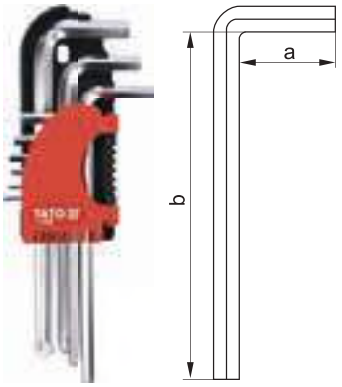

9 PCS

YATO	◎ [mm]	a [mm]	b [mm]	
YT-0502	2, 2.5, 3, 4, 5, 6, 7, 8, 10	16, 18, 21, 23, 28, 31, 33, 35, 39	81, 88, 95, 109, 121, 135, 145, 157, 174	6/36

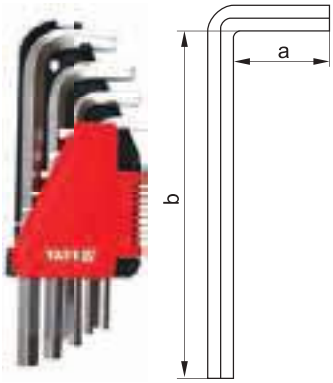

10 PCS

YATO	◎ [mm]	a [mm]	b [mm]	
YT-0508	2, 2.5, 3, 4, 5, 6, 7, 8, 10, 12	16, 18, 21, 23, 28, 31, 33, 35, 39, 42	81, 88, 95, 109, 121, 135, 145, 157, 174, 180	6/36