SM1X9000R

DODATKOWE SEPARATORY TORÓW GŁÓWNYCH DO SM1R..., DO TYP E WG UL508



Przeznaczenie produktu	Separatory faz do SM1R…
Seria produktu	SM1X
Opis	Separatory faz do SM1R…
Accessories for	SM1R…

Właściwości mechaniczne

Pozycja montażowa

		normalna		Inne
Masa			g	16

Wymiary

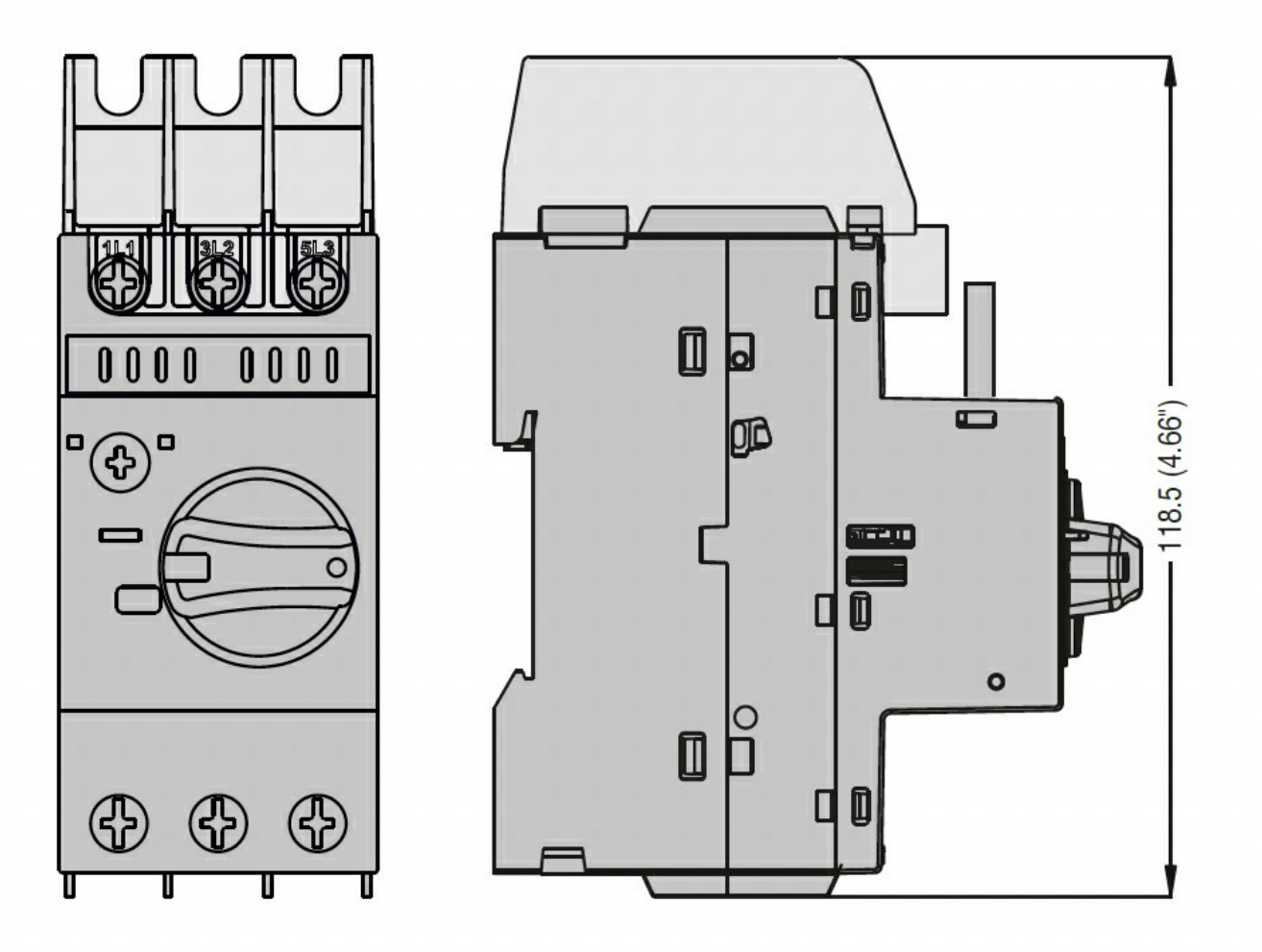

Certyfikaty i zgodność

Zgodność

CSA C22.2 n° 14
IEC/EN 60947-1
IEC/EN 60947-5-1

The characteristics described in this document are subject to updates or modifications at any time. The descriptions, technical and functional information, illustrations and instructions in this brochure are purely illustrative, and are consequently not contractually binding

	UL508
Certyfikaty	
	cULus
	EAC

Klasyfikacja ETIM

The characteristics described in this document are subject to updates or modifications at any time. The descriptions, technical and functional information, illustrations and instructions in this brochure are purely illustrative, and are consequently not contractually binding