Presence detector - Professional Line

Hallway

DALI-2 Input Device - concealed
EAN 4007841 064532
Article number 064532




Max. 25 x 3 m


IP20


Helligkeit


Temperatur



Luftfeuchte


2 - 4 m



Input Device

5 years
Herstellergarantie steinel-professional.de/garantie

CE

Function description

The cleverer hallway sensor knows more. Perfect radial detection up to 25 m – ideal for long corridors and hallways. Reach can be adjusted in both directions. Contemporary Control PRO II design. Featuring Bluetooth technology. Interfaces for COM1, COM2, DALI-2 APC, DALI-2 IPD, KNX, IP and BT IPD (Slave).

Technical specifications

Dimensions (L x W x H)	67 x 103 x 103 mm
With motion detector	Yes
Manufacturer's Warranty	5 years
Settings via	Bluetooth, Bus
With remote control	No
Version	DALI-2 Input Device - concealed
PU1, EAN	4007841064532
Type	Presence detector
Application, place	Indoors
Application, room	Indoors, corridor / aisle
Colour	white
Colour, RAL	9003
Includes corner wall mount	No
Installation site	ceiling
Installation	Concealed wiring, Ceiling
IP-rating	IP20
Ambient temperature	-20 – 50 °C

Technology, sensors	High frequency, Light sensor, Temperature, Air humidity
Mounting height	2,00 – 4,00 m
Mounting height max.	4,00 m
Optimum mounting height	2,8 m
HF-system	5,8 GHz
Detection	also through glass, wood and stud walls
Detection angle	Aisle, 360 °
Angle of aperture	140 °
Sneak-by guard	Yes
Capability of masking out individual segments	No
Electronic scalability	Yes
Mechanical scalability	No
Reach, radial	25 x 3 m (75 m^2)
Reach, tangential	25 x 3 m (75 m^2)
Transmitter power	< 1 mW

Hallway

DALI-2 Input Device - concealed
EAN 4007841 064532
Article number 064532

Technical specifications

Material	Plastic
Mains power supply	12 – 23 V
Power supply, detail	DALI bus
Steuerausgang, Dali	Addressable/slave
With bus coupling	Yes

Basic light level function	No
Main light adjustable	No
Twilight setting TEACH	No
Constant-lighting control	No
Interconnection	Yes
Type of interconnection	Master/slave
Interconnection via	Bluetooth, DALI bus

Presence detector - Professional Line

Hallway

DALI-2 Input Device - concealed
EAN 4007841 064532
Article number 064532

Detection Zone

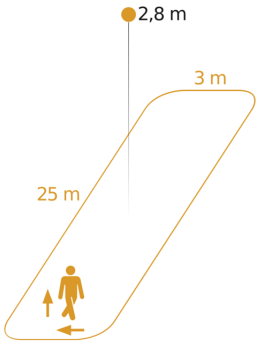

Possible mounting height: 2,00 m – 4,00 m
Orange: radial and tangential

Dimension Drawing

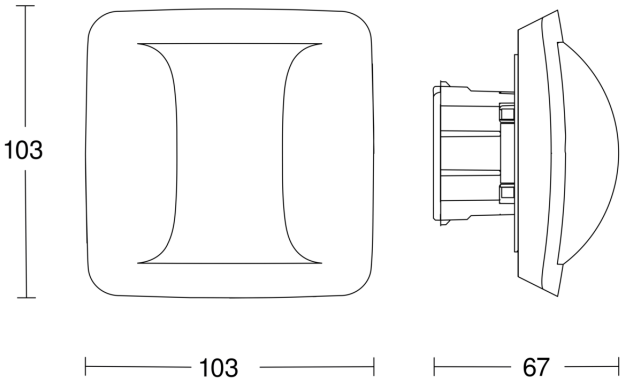

Circuit diagram

