

Goobay

HDMI™/DVI-D adaptor, gold-plated

HDMI™ Standard female (Type A) >
DVI-D male Dual-Link (24+1 pin)

- moulded
- high quality

68931 Bulk



Goobay

HDMI™/DVI-D adaptor, nickel

HDMI™ Standard female (Type A) >
DVI-D male Dual-Link (24+1 pin)

- moulded
- high quality

68482 Bulk



Goobay

HDMI™/DVI-D adaptor, gold-plated

HDMI™ standard male (type A) >
DVI-D male Dual-Link (24+1 pin)

- moulded
- high quality

68930 Bulk



Goobay

HDMI™/DVI-D adaptor, nickel

HDMI™ standard male (type A) >
DVI-D male Dual-Link (24+1 pin)

- moulded
- high quality

68098 Bulk



Goobay

HDMI™/DVI-I adaptor, gold-plated

HDMI™ Standard female (Type A) >
DVI-I female Dual-Link (24+5 pin)

- moulded
- high quality

68690 Bulk



Goobay

HDMI™/DVI-I adaptor, nickel

HDMI™ Standard female (Type A) >
DVI-I female Dual-Link (24+5 pin)

- moulded
- high quality

60752 Bulk

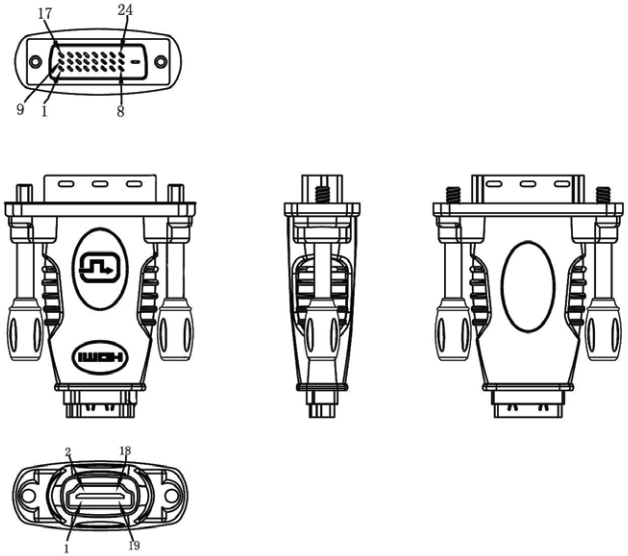





HDMI		DVI
3	●	1
1	●	2
2	●	3
6	●	9
4	●	10
5	●	11
9	●	17
7	●	18
8	●	19
10	●	23
12	●	24
11	●	22
15	●	6
16	●	7
18	●	14
17	●	15
18	●	16
Schirm /shell	●	Schirm /shell

- HDMI/DVI-D Adapter; lose Ware
- 19-pol. HDMI-Buchse>DVI-D (24+1) Stecker
- vergossen, high quality
- Goldkontakte
- Monitor,Beamer, Plasma TV ...(mit HDMI Eingang) können mittels Adapter über ein DVI-D Kabel an DVD Player, Grapfikkarten ... (mit DVI-D Ausgang) angeschlossen werden
- RoHS-konform

- HDMI/DVI-D adaptor; bulk
- 19 pin HDMI jack > DVI (24+51 jack
- gold plated contacts
- moulded, high quality
- monitor, beamer, plasma TV ...(with HDMI input) can be connected via adaptor by an DVI-D cable to DVD player, grafic cards ... (with DVI-D output)
- RoHS-compliant

Änderungen			Datum	Name
Datum	Name	gez.:	20.11.2008	li
23.09.2015	tf	gepr.:	20.11.2008	li
		Norm:		
		Änderungen vorbehalten / Subject to change		

Bezeichnung
A 333 G

Blatt

Zeichnungs-Nr.:
68931

von