

Goobay
DVI/SVGA adapter cable
DVI-A male (12+5 pin) > 2x VGA female (15-pin)

- to connect two devices to one DVI port
- gold plated

0.10	m	68737	Bulk



Goobay
DVI/RGB/SVGA adapter cable
DVI-A male (12+5 pin) > VGA female (15-pin) + 3x RCA female

- to connect two devices to one DVI port
- pin out DVI-A 12+5
- gold plated

0.10	m	68736	Bulk



Goobay
Mini DVI/VGA adapter cable
Mini DVI plug > VGA female (15-pin)

- to connect MacBook, iMac Intel and Powerbook 12" DP with a VGA port monitor

0.10	m	51744	Bulk



Goobay
Mini DVI/HDMI™ adapter cable
Mini DVI plug > HDMI™ Standard female (Type A)

- to connect MacBook, iMac Intel and Powerbook 12" DP with a HDMI™ port monitor

0.10	m	51745	Bulk



Goobay
DVI-I/DVI-D adaptor
DVI-I female Dual-Link (24+5 pin) >
DVI-D male Dual-Link (24+1 pin)

- to connect DVI-I (24+5) plug to DVI-D (24+1) sockets

68523	Bulk		



Goobay
Analog DVI/VGA adaptor
DVI-I female Dual-Link (24+5 pin) > VGA male (15-pin)

68029	Bulk		

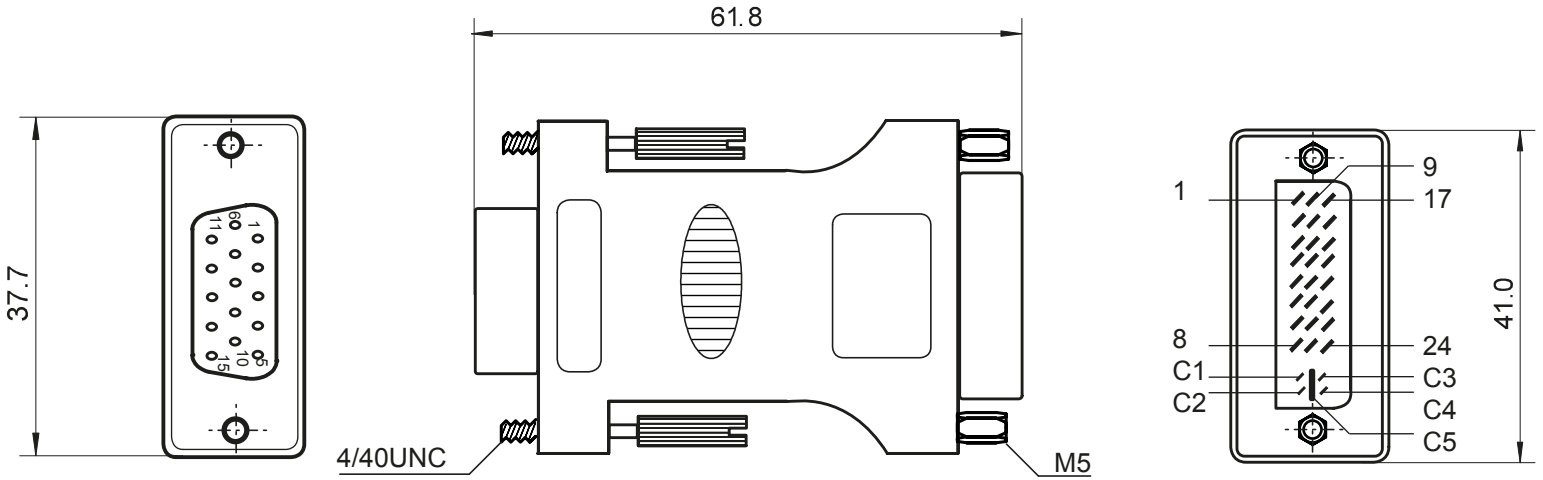

DVI-A (F)	6	7	C1	C5	C2	C5	C3	C5	8	14+16	15	C4	64
HD15M	15	12	1	6+7+8	2	6+7+8	3	6+7+8	14	9	5+10	13	64





analoger DVI/VGA Adapter
DVI (24+5) Buchse > 15pol.VGA HD-Stecker
- Anschlüsse:
  - DVI-I (24+5) F
  - HD15 VGA M
  - Nickel-beschichtet
- Isolation: PVC
- Gewicht: 38g
- RoHS-konform

analog DVI/VGA adaptor
DVI (24+5) plug > 15 pin VGA HD jack
- Connectors:
  DVI-I (24+5) F
  HD15 VGA M
  Nickel-plated
- Insulation: PVC
- Weight: 38g
- RoHS compliant

Änderungen			Datum	Name	Bezeichnung		Blatt
Datum	Name	gez.:	13.02.2014	tf	DVI ADAP DVI F > 15 pin HD M (VGA)	goobay®	
		gepr.:	13.02.2014	tf			
		Norm:			Zeichnungs-Nr.:		von
		Änderungen vorbehalten / Subject to change			68029		