DAMPPROOF HOUSING

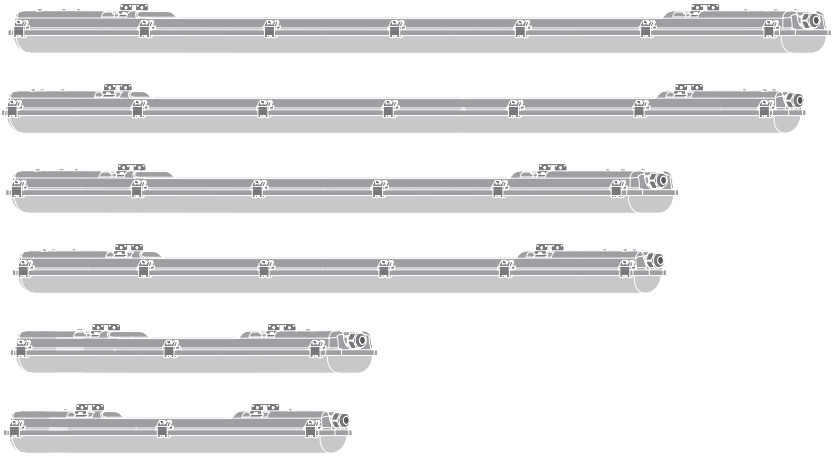

	EAN	l x w x h [mm]	VAC	Hz	IP	IK	(°C)	
DP HOUSING 600 E 1XLAMP IP65	4099854463679	655x65x65	220-240	50/60	65	08	-20...+40	0,34kg
DP HOUSING 600 E 1XLAMP MT IP65	4099854463730	655x65x65	220-240	50/60	65	08	-20...+40	0,39kg
DP HOUSING 600 E 2XLAMP IP65	4099854463716	655x102x65	220-240	50/60	65	08	-20...+40	0,46kg
DP HOUSING 600 E 2XLAMP MT IP65	4099854463754	655x102x65	220-240	50/60	65	08	-20...+40	0,55kg
DP HOUSING 1200 E 1XLAMP IP65	4099854463792	1265x65x65	220-240	50/60	65	08	-20...+40	0,59kg
DP HOUSING 1200 E 1XLAMP MT IP65	4099854463877	1265x65x65	220-240	50/60	65	08	-20...+40	0,70kg
DP HOUSING 1200 E 2XLAMP IP65	4099854463839	1265x102x65	220-240	50/60	65	08	-20...+40	0,73kg
DP HOUSING 1200 E 2XLAMP MT IP65	4099854463914	1265x102x65	220-240	50/60	65	08	-20...+40	0,93kg
DP HOUSING 1500 E 1XLAMP IP65	4099854463990	1565x65x65	220-240	50/60	65	08	-20...+40	0,81kg
DP HOUSING 1500 E 1XLAMP MT IP65	4099854464119	1565x65x65	220-240	50/60	65	08	-20...+40	0,95kg
DP HOUSING 1500 E 2XLAMP IP65	4099854464058	1565x102x65	220-240	50/60	65	08	-20...+40	1,05kg
DP HOUSING 1500 E 2XLAMP MT IP65	4099854464133	1565x102x65	220-240	50/60	65	08	-20...+40	1,30kg

DAMPPROOF HOUSING

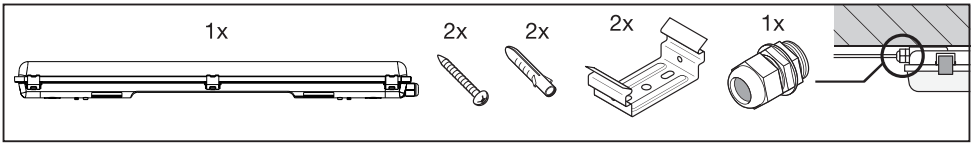

1

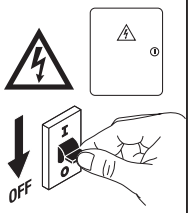

2

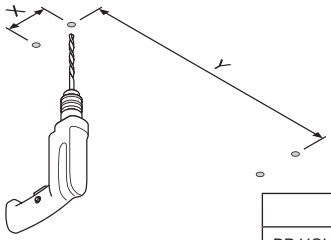

	X [mm]	Y [mm]
DP HOUSING 600	350 ± 20	16.5 ± 1
DP HOUSING 1200	840 ± 20	16.5 ± 1
DP HOUSING 1500	1140 ± 20	16.5 ± 1

3

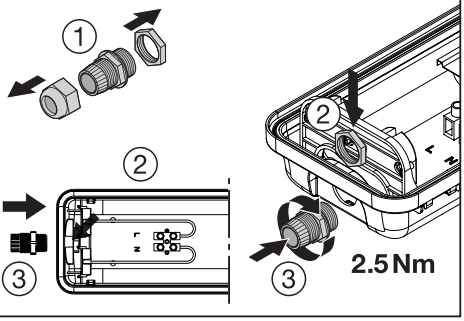

4

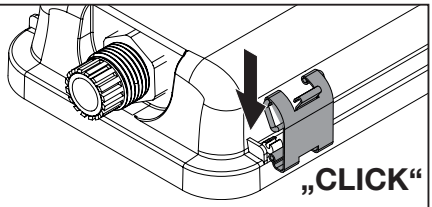

	"CLICK"
DP HOUSING 600	6x
DP HOUSING 1200	12x
DP HOUSING 1500	14x

5

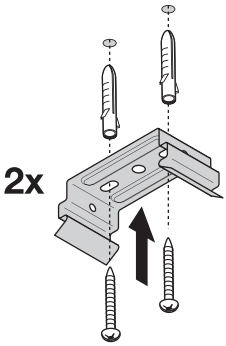

6

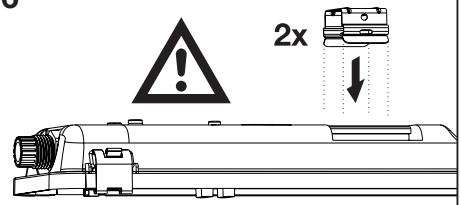

7

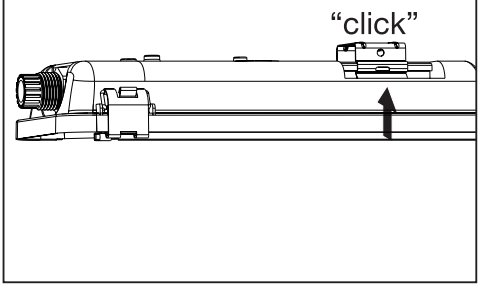

8

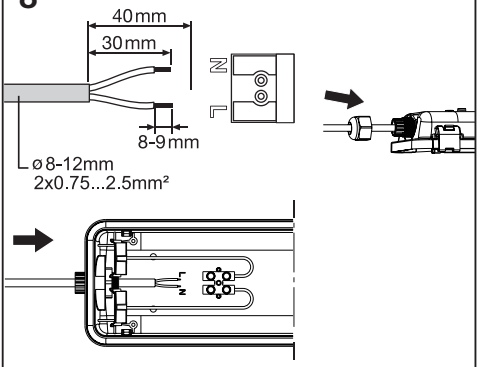

9

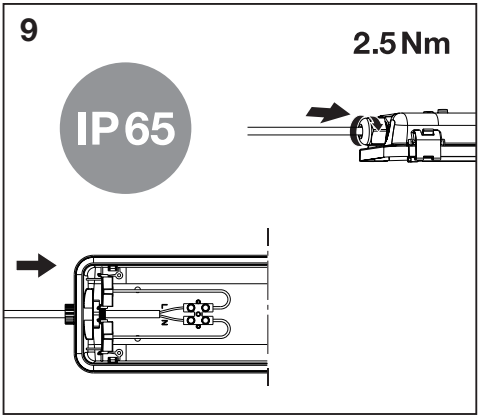

10

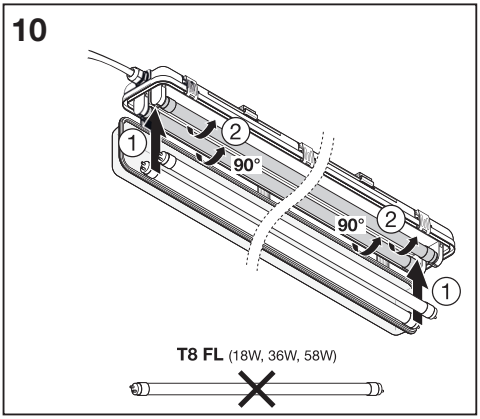

G13 LED
LED TUBE EM 220-240V



	220-240V 50/60HZ
DP HOUSING 600 E 1XLAMP IP65	1xG13 LED TUBE (0,6m)
DP HOUSING 600 E 1XLAMP MT IP65	1xG13 LED TUBE (0,6m)
DP HOUSING 600 E 2XLAMP IP65	2xG13 LED TUBE (0,6m)
DP HOUSING 600 E 2XLAMP MT IP65	2xG13 LED TUBE (0,6m)
DP HOUSING 1200 E 1XLAMP IP65	1xG13 LED TUBE (1,2m)
DP HOUSING 1200 E 1XLAMP MT IP65	1xG13 LED TUBE (1,2m)
DP HOUSING 1200 E 2XLAMP IP65	2xG13 LED TUBE (1,2m)
DP HOUSING 1200 E 2XLAMP MT IP65	2xG13 LED TUBE (1,2m)
DP HOUSING 1500 E 1XLAMP IP65	1xG13 LED TUBE (1,5m)
DP HOUSING 1500 E 1XLAMP MT IP65	1xG13 LED TUBE (1,5m)
DP HOUSING 1500 E 2XLAMP IP65	2xG13 LED TUBE (1,5m)
DP HOUSING 1500 E 2XLAMP MT IP65	2xG13 LED TUBE (1,5m)

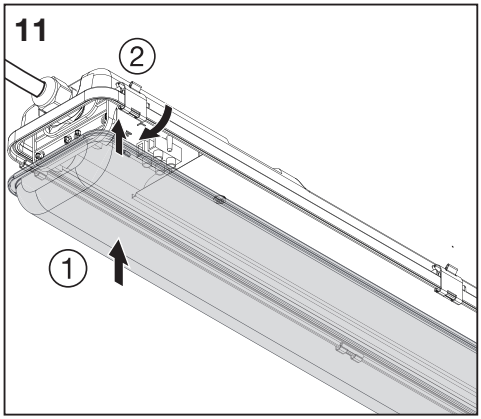

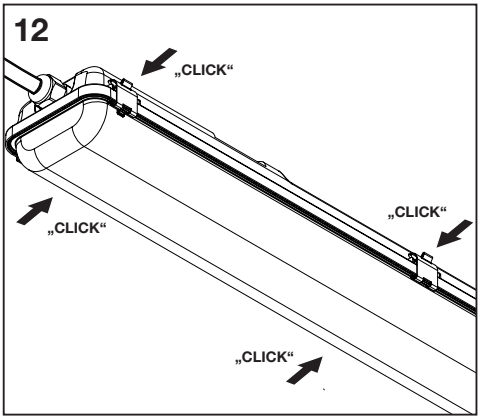

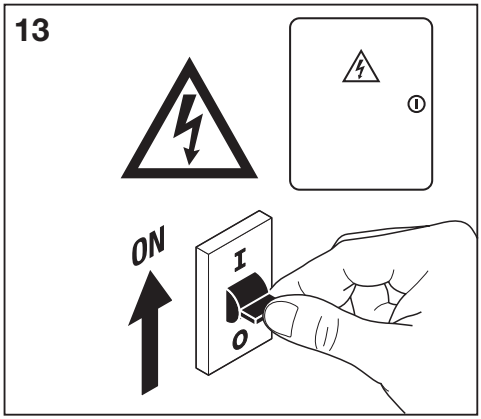



CE EAC UK CA









LEDVANCE SASU
CQM, 5 rue d’Altorf
67120 Molsheim France
www.ledvance.com

GB LEDVANCE Ltd, Sterling House, 810 Mandarin Court, Warrington, Cheshire, WA1 1GG, United Kingdom

C10449057
G11211741
21.01.25