SAC-5P-M12MS PB TR - Termination resistor

1507803

https://www.phoenixcontact.com/gb/products/1507803

Please be informed that the data shown in this PDF document is generated from our online catalog. Please find the complete data in the user documentation. Our general terms of use for downloads are valid.



Terminating resistor PROFIBUS M12

Commercial data

Item number	1507803
Packing unit	5 pc
Minimum order quantity	5 pc
Sales key	AF1GVX
Product key	AF1GVX
Catalog page	Page 197 (C-6-2019)
GTIN	4017918900403
Weight per piece (including packing)	10.9 g
Weight per piece (excluding packing)	7.69 g
Customs tariff number	85332100
Country of origin	DE

Technical data

Product properties

Product type	Terminal resistor
Number of positions	4
Coding	B

Insulation characteristics

Overvoltage category	II
Degree of pollution	3

Electrical properties

Insulation resistance	≥ 100 MΩ
Nominal voltage U_N	48 V AC
	60 V DC
	5 V_{rms}
Nominal current I_N	4 A
	≤ 25 mA (I_{eff})

General

Termination resistor	390 Ω ±1 % (R1)
	220 Ω ±1 % (R2)
	390 Ω ±1 % (R3)
Power consumption	0.25 W (R1)
	0.25 W (R2)
	0.25 W (R3)

Signaling

Status display	no
Status display present	no

Dimensions

Dimensional drawing	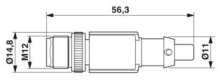
Width	15 mm
Height	14.8 mm
Length	56.3 mm

Material specifications

Flammability rating according to UL 94	HB
Material of grip body	TPU, hardly inflammable, self-extinguishing

Contact material	CuSn
Contact surface material	Ni/Au
Contact carrier material	TPU GF
Material for screw connection	Zinc die-cast, nickel-plated

Connector

Connection 1

Type	Plug straight M12
Coding type	B

Connection 2

Type	free cable end

Mechanical properties

Mechanical data

Insertion/withdrawal cycles	≥ 100

Environmental and real-life conditions

Ambient conditions

Degree of protection	IP65
	IP67
Ambient temperature (operation)	-25 °C ... 90 °C (Plug)

Drawings

Dimensional drawing

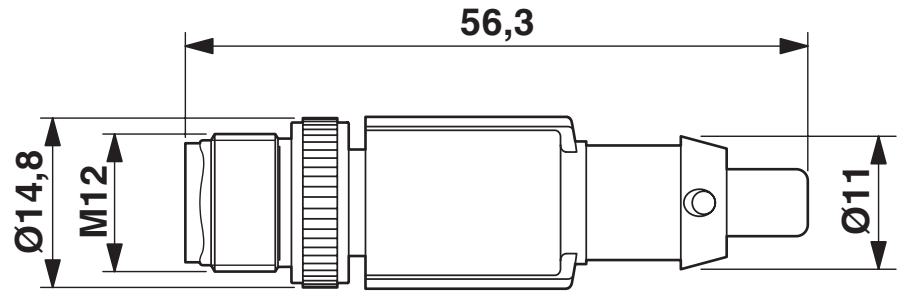

Plug, M12 x 1, straight, shielded

Schematic diagram

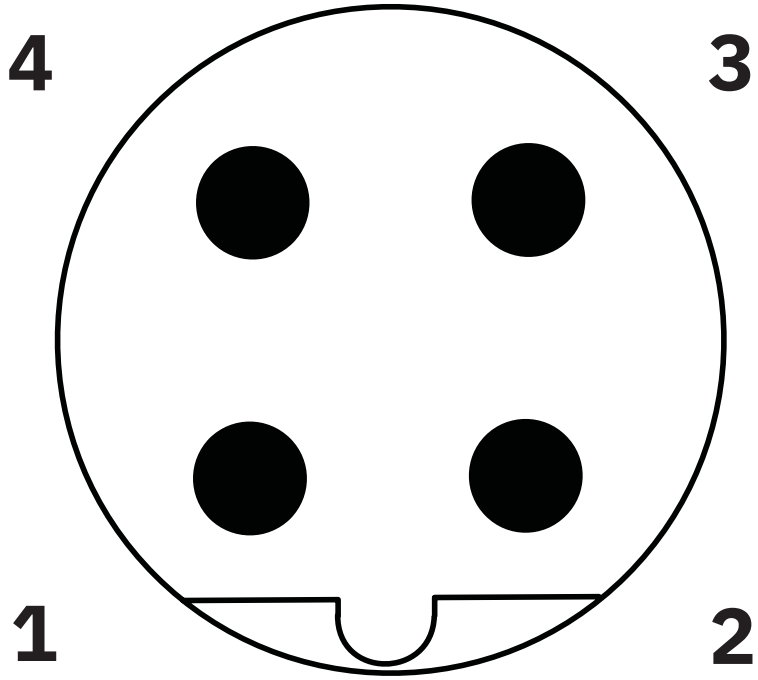

Pin assignment of M12 male connector, 4-pos., B-coded, view of pin side

Circuit diagram

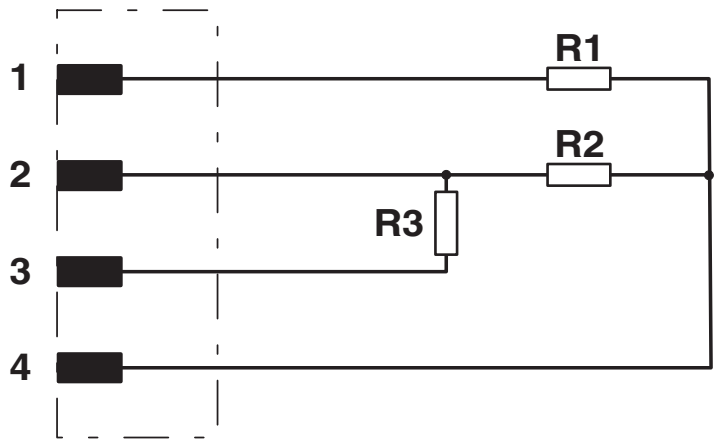

Contact assignment of the termination resistor; for resistance values, see technical data

Classifications

ECLASS

ECLASS-13.0	19070403

ETIM

ETIM 9.0	EC000448

UNSPSC

UNSPSC 21.0	32121600

Environmental product compliance

EU RoHS

Fulfills EU RoHS substance requirements	Yes, No exemptions

China RoHS

Environment friendly use period (EFUP)	EFUP-E
	No hazardous substances above the limits

EU REACH SVHC

REACH candidate substance (CAS No.)	No substance above 0.1 wt%

EF3.0 Climate Change

CO2e kg	0.284 kg CO2e

Phoenix Contact 2025 © - all rights reserved
https://www.phoenixcontact.com

PHOENIX CONTACT Ltd
Halesfield 13, Telford
Shropshire, TF7 4PG
01952 681700
info@phoenixcontact.co.uk