

Clicktronic Casual

Antenna cable

coaxial cable with a shielding rating > 95 dB

- pure copper conductor and 2-way shielding for clear signal quality
- particularly suitable for digital antenna or cable TV
- 24 carat gold-plated contacts for minimum transmission resistance

1.00 m	70399	Retail Box
2.00 m	70401	Retail Box
3.00 m	70402	Retail Box
5.00 m	70403	Retail Box
7.50 m	70404	Retail Box
10.00 m	70405	Retail Box
15.00 m	70407	Retail Box
20.00 m	70408	Retail Box

Shielding efficiency	95 dB
Cable type	round cable
Inner conductor material	OFC (99,9% oxygen-free copper)
Inner conductor, core diameter	0.65 mm
Inner Conductor number	1 pieces
AWG	22
Number of shieldings	2 x
Type 2, shielding	braid (copper) 96x
Cable sheath diameter (approx.)	6 mm
Diameter ferrite core	14 mm
Ferrite core	yes





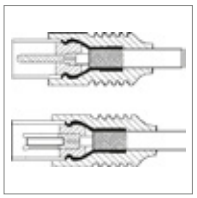

Goobay

Antenna cable, 100% shielded, ferrite, white

Coaxial male -Coaxial female

- double shielded with high density for interference-free signal transmission
- fully shielded, encapsulated plug on both sides, protection against dust, dirt and mechanical loads
- nickel plated contacts
- with ferrite filters

1.50 m	50723	Bulk
2.50 m	50724	Bulk
3.50 m	50742	Bulk
5.00 m	50725	Bulk
7.50 m	50726	Bulk
10.00 m	50722	Bulk

Shielding efficiency	80 dB
Cable type	coaxial cable
Inner conductor material	CCS
Inner conductor, core diameter	0.5 mm
Number of shieldings	2 x
Type 1, shielding	foil (aluminum)
Type 2, shielding	braid (aluminum)112x
Cable sheath diameter (approx.)	5.3 mm
Ferrite core	yes



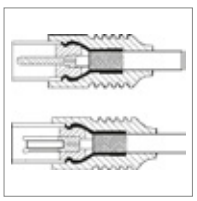

Goobay

Antenna cable, 100% shielded, ferrite, black

Coaxial male -Coaxial female

- double shielded with high density for interference-free signal transmission
- fully shielded, encapsulated plug on both sides, protection against dust, dirt and mechanical loads
- nickel plated fitting contacts
- with ferrite filters

1.50 m	50728	Bulk
2.50 m	50729	Bulk
3.50 m	50743	Bulk
5.00 m	50730	Bulk
7.50 m	50731	Bulk
10.00 m	50727	Bulk

Shielding efficiency	80 dB
Cable type	coaxial cable
Inner conductor material	CCS
Inner conductor, core diameter	0.5 mm
Number of shieldings	2 x
Type 1, shielding	foil (aluminum)
Type 2, shielding	braid (aluminum)112x
Cable sheath diameter (approx.)	5.3 mm
Ferrite core	yes

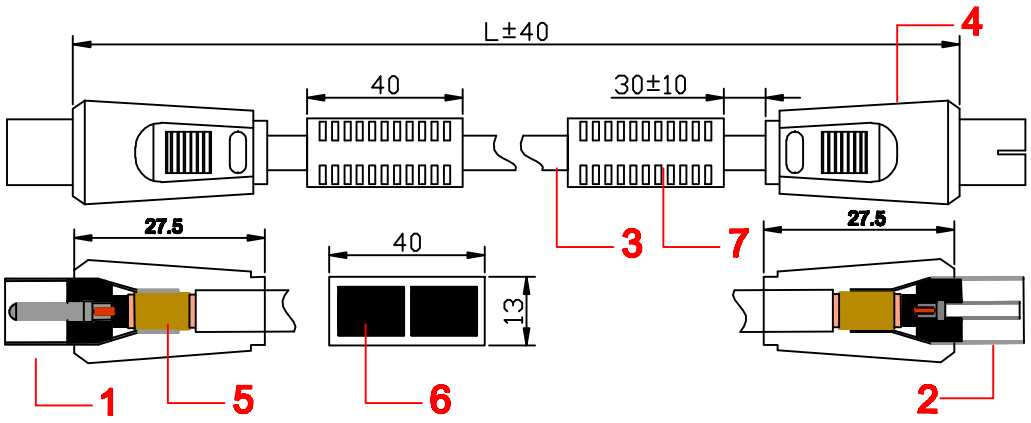

Construction

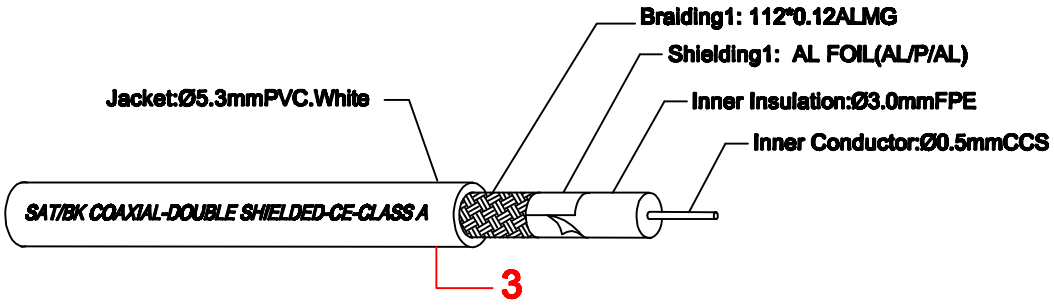

No	Item	Length	Packaging
50723	BKM 0150	1.5m	1/10/80/160
50724	BKM 0250	2.5m	1/10/60/120
50742	BKM 0350	3.5m	1/10/40/80
50725	BKM 0500	5.0m	1/10/30/60
50726	BKM 0750	7.5m	1/5/20/40
50722	BKM 1000	10	1/5/20/40

Wiring Method

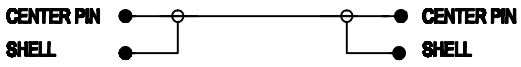

COAX 9.5plug COAX 9.5jack

1. dimensions As shown
2. Insulation resistance≥10Ω up to 500V=
3. dielectric strength
   2 KV 50Hz 2 sec.
4. TESTING: 100% OPEN AND SHORT AND MISWIRE TEST.
5. 100% RoHS CONPLIANT.

7	MOULDED2	PVC 45P White	2*12g
6	FERRITE	φ9.8mm H:13.5mm	4PCS
5	Copper coil	φ4.5mm H:6mm	2PCS
4	MOULDED1	PVC 45P White	2*10g
3	CABLE	φ5.3 RG59 COAXIAL CABLE White(According to the chart)	L
2	CONNECTRORS2	COAX 9.5 Jack (Nickel plating 100%Shielded)	1set
1	CONNECTRORS1	COAX 9.5 Plug (Nickel plating 100% Shielded)	1set
NO	Item Name	SPEC	QTY

Edition	WEC/000	Scale	
Designed by	ming hong	Item Name	COAX PLUG TO COAX JACK COAXIAL CABLE WITH FERRITE
Checked by		Item NO	BKM series cable
Approved by		Unit: MM	
Date	11.26.2013		wentronic ASIA PACIFIC