Floor and Wall Mount Door Holder

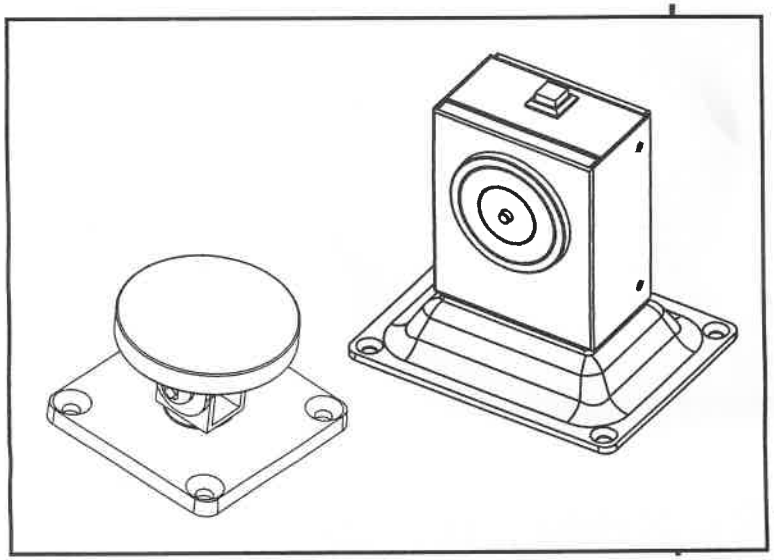

SPECIFICATIONS	
Dimensions	116Lx93Wx118H(mm)
Voltage Input	12-24VDC Adjustable
Current Draw	24V/70mA
Holding Force	50kg(110Lbs)
Anti-Rust Surface Treatment	Blue Zmc Plating
Operating Temperature	0~55℃
Operating Humidity	0~95%
Weight	1.4kg

FEATURES:

Voltage Selectable 12-24VDC Adjustable
Emergency Release Button/Test Button
Wall Mounting Direction
Low Current Consumption
Reliable Fail-Safe Mechanism
Durable and Silence Operation

Wiring Instructions

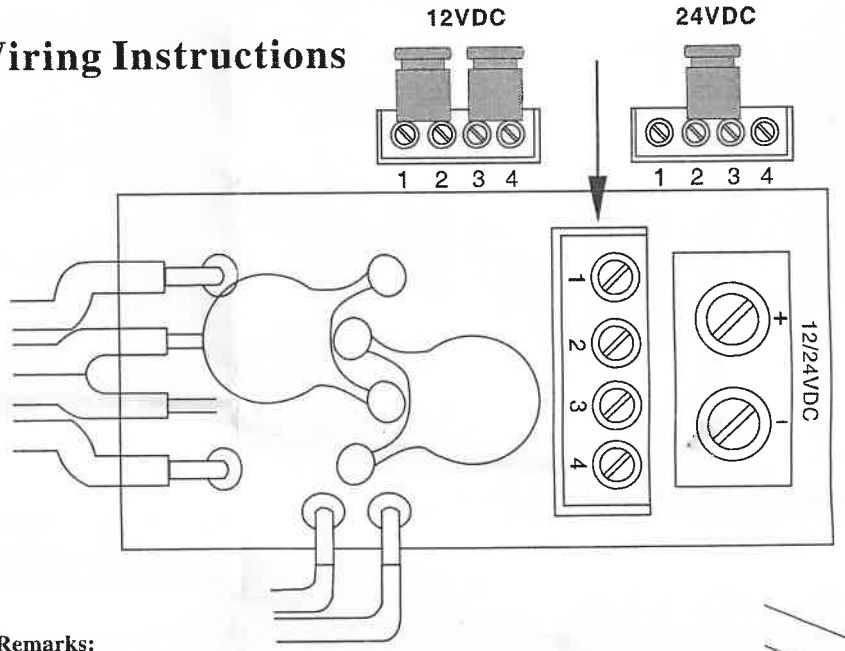

Remarks:

1. The default setting is 24VDC.
2. If user want to connect with 12VDC, operating as below:
   (1) Pull those two jumpers out. It is showed 4 pins here.
   (2) To set up 12VDC, insert one jumper on the position of 1 and 2, second jumper on the position of 3 and 4.

