PASSION FOR POWER.

Cable glands, degree of protection IP 66 (750 °C)



Mi AL 40

- 4 stainless steel external brackets

- for external fixing of enclosures

weight	0,085 kg

Drawings

Dimension drawing

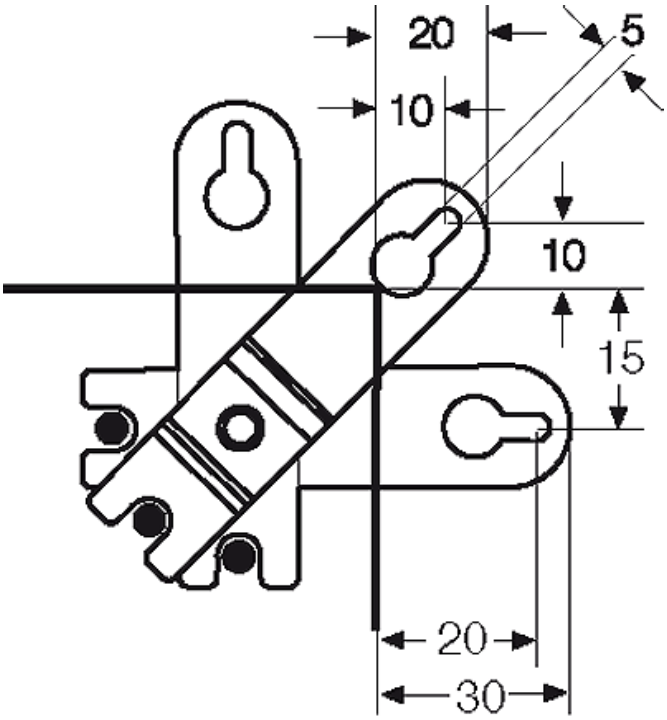

Gustav Hensel GmbH & Co. KG * Gustav-Hensel-Str. 6 * 57368 Lennestadt * Germany * Telefon: +49 (0)2723/609-0 * Fax: +49 (0)2723/60052 * Date: July 4. 2024