SIEMENS

Data sheet 3RV2031-4DB10



Circuit breaker size S2 for motor protection, Class 20 A-release 18...25 A N-release 325 A Screw terminal Standard switching capacity

product brand name	SIRIUS
product designation	Circuit breaker
design of the product	For motor protection
product type designation	3RV2
General technical data	
size of the circuit-breaker	S2
size of contactor can be combined company-specific	S2
product extension auxiliary switch	Yes
power loss [W] for rated value of the current	
● at AC in hot operating state	14.5 W
● at AC in hot operating state per pole	4.8 W
insulation voltage with degree of pollution 3 at AC rated value	690 V
surge voltage resistance rated value	6 kV
shock resistance according to IEC 60068-2-27	25g / 11 ms Sinus
mechanical service life (operating cycles)	
● of the main contacts typical	50 000
● of auxiliary contacts typical	50 000
electrical endurance (operating cycles) typical	50 000
reference code according to IEC 81346-2	Q
Substance Prohibitance (Date)	10/15/2014
SVHC substance name	Blei - 7439-92-1
Ambient conditions	
installation altitude at height above sea level maximum	2 000 m
ambient temperature	
● during operation	-20 ... +60 °C
● during storage	-50 ... +80 °C
● during transport	-50 ... +80 °C
relative humidity during operation	10 ... 95 %
Main circuit	
number of poles for main current circuit	3
adjustable current response value current of the current-dependent overload release	18 ... 25 A
operating voltage	
● rated value	20 ... 690 V
● at AC-3 rated value maximum	690 V
● at AC-3e rated value maximum	690 V
operating frequency rated value	50 ... 60 Hz
operational current rated value	25 A
operational current	
● at AC-3 at 400 V rated value	25 A

Subject to change without notice
© Copyright Siemens

● at AC-3e at 400 V rated value	25 A
operating power	
● at AC-3	
— at 230 V rated value	5.5 kW
— at 400 V rated value	11 kW
— at 500 V rated value	15 kW
— at 690 V rated value	22 kW
● at AC-3e	
— at 230 V rated value	5.5 kW
— at 400 V rated value	11 kW
— at 500 V rated value	15 kW
— at 690 V rated value	22 kW
operating frequency	
● at AC-3 maximum	15 1/h
● at AC-3e maximum	15 1/h
Protective and monitoring functions	
product function	
● ground fault detection	No
● phase failure detection	Yes
trip class	CLASS 20
design of the overload release	thermal
maximum short-circuit current breaking capacity (Icu)	
● at AC at 240 V rated value	100 kA
● at AC at 400 V rated value	65 kA
● at AC at 500 V rated value	12 kA
● at AC at 690 V rated value	5 kA
operating short-circuit current breaking capacity (Ics) at AC	
● at 240 V rated value	100 kA
● at 400 V rated value	30 kA
● at 500 V rated value	6 kA
● at 690 V rated value	3 kA
response value current of instantaneous short-circuit trip unit	325 A
UL/CSA ratings	
full-load current (FLA) for 3-phase AC motor	
● at 480 V rated value	25 A
● at 600 V rated value	25 A
yielded mechanical performance [hp]	
● for single-phase AC motor	
— at 110/120 V rated value	2 hp
— at 230 V rated value	5 hp
● for 3-phase AC motor	
— at 200/208 V rated value	7.5 hp
— at 220/230 V rated value	10 hp
— at 460/480 V rated value	20 hp
— at 575/600 V rated value	25 hp
Short-circuit protection	
product function short circuit protection	Yes
design of the short-circuit trip	magnetic
design of the fuse link for IT network for short-circuit protection of the main circuit	
● at 240 V	none required
● at 400 V	100
● at 500 V	80
● at 690 V	63
Installation/ mounting/ dimensions	
mounting position	any
fastening method	screw and snap-on mounting onto 35 mm DIN rail according to DIN EN 60715
height	140 mm
width	55 mm
depth	149 mm
required spacing	

© Copyright Siemens

● with side-by-side mounting at the side	0 mm
● for grounded parts at 400 V	
— downwards	50 mm
— upwards	50 mm
— at the side	10 mm
● for live parts at 400 V	
— downwards	50 mm
— upwards	50 mm
— at the side	10 mm
● for grounded parts at 500 V	
— downwards	50 mm
— upwards	50 mm
— at the side	10 mm
● for live parts at 500 V	
— downwards	50 mm
— upwards	50 mm
— at the side	10 mm
● for grounded parts at 690 V	
— downwards	50 mm
— upwards	50 mm
— at the side	10 mm
● for live parts at 690 V	
— downwards	50 mm
— upwards	50 mm
— at the side	10 mm
Connections/ Terminals	
type of electrical connection	
● for main current circuit	screw-type terminals
arrangement of electrical connectors for main current circuit	Top and bottom
type of connectable conductor cross-sections	
● for main contacts	
— solid or stranded	2x (1 ... 25 mm²), 1x (1 ... 35 mm²)
— finely stranded with core end processing	2x (1 ... 16 mm²), 1x (1 ... 25 mm²)
● for AWG cables for main contacts	2x (18 ... 3), 1x (18 ... 2)
tightening torque	
● for main contacts with screw-type terminals	3 ... 4.5 N·m
design of screwdriver shaft	Diameter 5 to 6 mm
size of the screwdriver tip	Pozidriv size 2
design of the thread of the connection screw	
● for main contacts	M6
Safety related data	
B10 value	
● with high demand rate according to SN 31920	5 000
proportion of dangerous failures	
● with low demand rate according to SN 31920	50 %
● with high demand rate according to SN 31920	50 %
failure rate [FIT]	
● with low demand rate according to SN 31920	50 FIT
T1 value for proof test interval or service life according to IEC 61508	10 a
protection class IP on the front according to IEC 60529	IP20
touch protection on the front according to IEC 60529	finger-safe, for vertical contact from the front
display version for switching status	Handle
Approvals Certificates	

General Product Approval	**Declaration of Conformity**

Subject to change without notice
© Copyright Siemens

Confirmation

KC

Declaration of Conformity	Test Certificates		Marine / Shipping		
	Special Test Certificate	Type Test Certificates/Test Report			

Marine / Shipping			other	
			Household and similar appliances	Confirmation

Railway		Environment
Confirmation	Vibration and Shock	Environmental Confirmations

Further information

Siemens has decided to exit the Russian market (see here).
https://press.siemens.com/global/en/pressrelease/siemens-wind-down-russian-business

Siemens is working on the renewal of the current EAC certificates.
Please contact your local Siemens office on the status of validity of the EAC certification if you intend to import or offer to supply these products to an EAC relevant market (other than the sanctioned EAEU member states Russia or Belarus).

Information on the packaging
https://support.industry.siemens.com/cs/ww/en/view/109813875

Information- and Downloadcenter (Catalogs, Brochures,…)
https://www.siemens.com/ic10

Industry Mall (Online ordering system)
https://mall.industry.siemens.com/mall/en/en/Catalog/product?mlfb=3RV2031-4DB10

Cax online generator
http://support.automation.siemens.com/WW/CAXorder/default.aspx?lang=en&mlfb=3RV2031-4DB10

Service&Support (Manuals, Certificates, Characteristics, FAQs,...)
https://support.industry.siemens.com/cs/ww/en/ps/3RV2031-4DB10

Image database (product images, 2D dimension drawings, 3D models, device circuit diagrams, EPLAN macros, ...)
http://www.automation.siemens.com/bilddb/cax_de.aspx?mlfb=3RV2031-4DB10&lang=en

Characteristic: Tripping characteristics, I²t, Let-through current
https://support.industry.siemens.com/cs/ww/en/ps/3RV2031-4DB10/char

Further characteristics (e.g. electrical endurance, switching frequency)
http://www.automation.siemens.com/bilddb/index.aspx?view=Search&mlfb=3RV2031-4DB10&objecttype=14&gridview=view1

Subject to change without notice
© Copyright Siemens

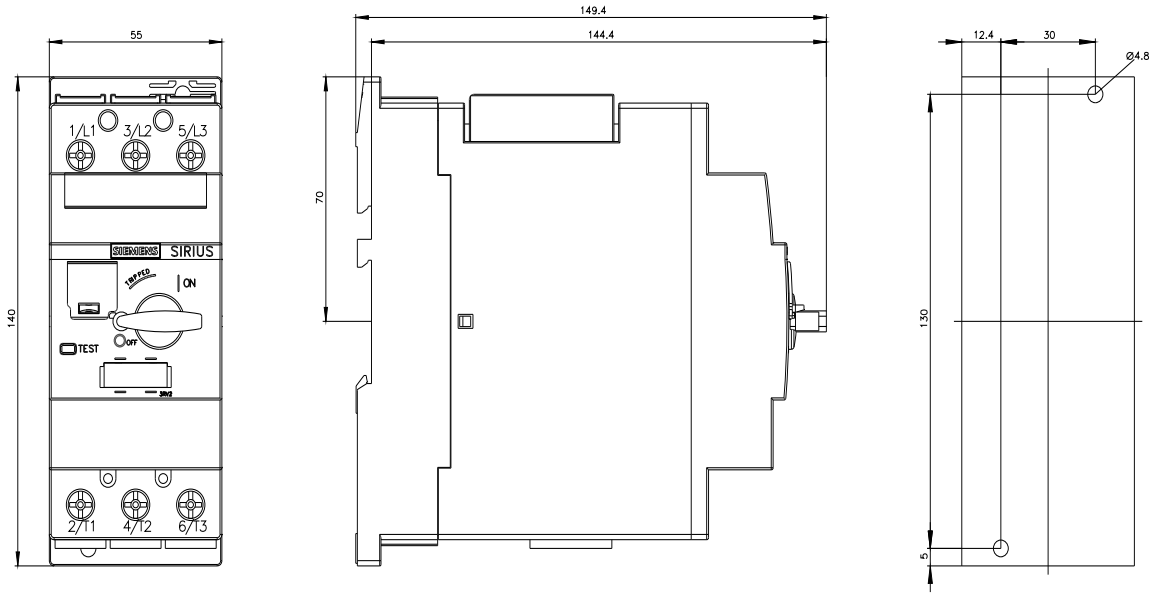

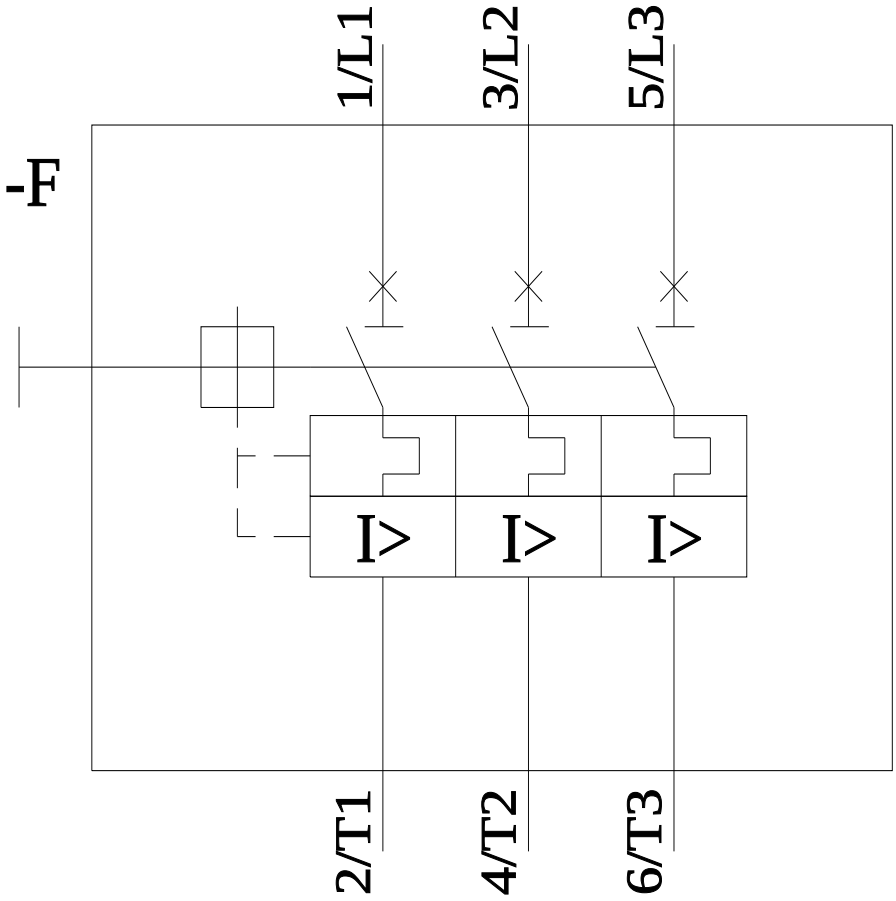

last modified: 9/5/2023

Subject to change without notice
© Copyright Siemens

Subject to change without notice
© Copyright Siemens