WAGO PCB Terminal Blocks and Connectors

Edition 2026/1

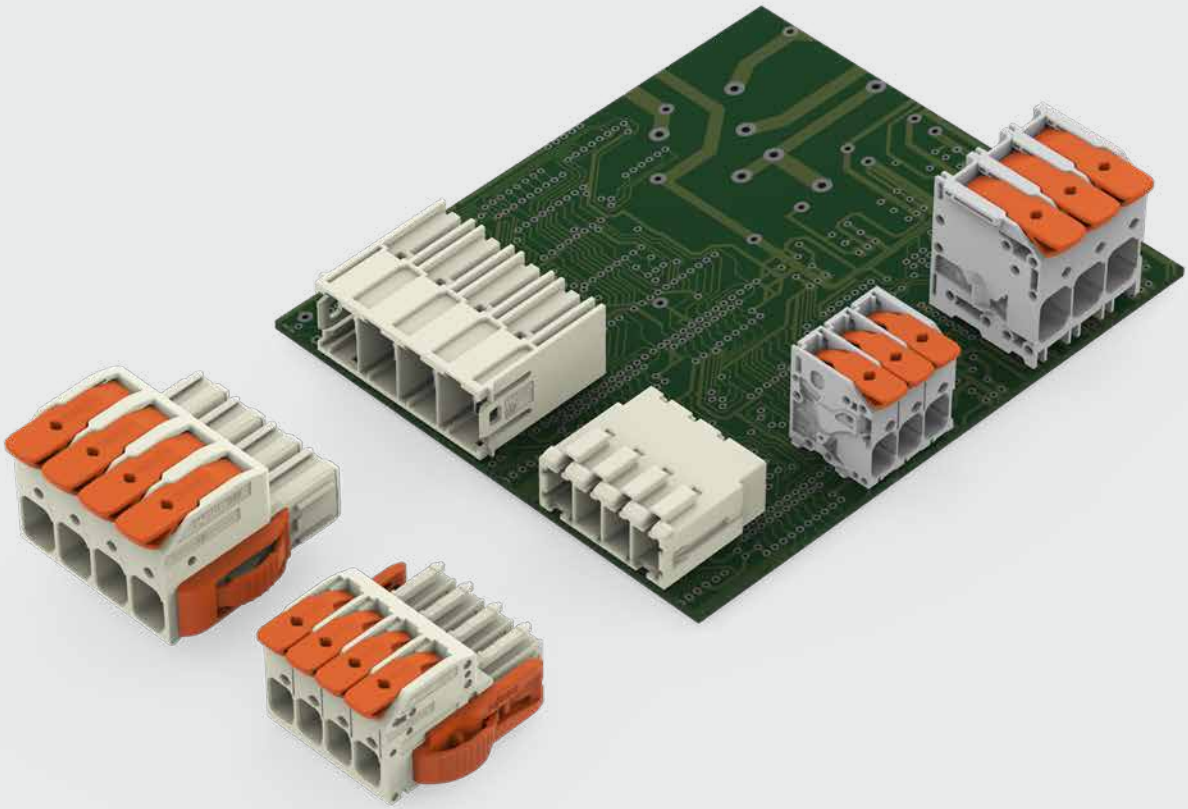

WAGO Full Line Catalogs



WAGO Installation Connectors

- Splicing Connectors with Levers
- Inline Splicing Connectors with Levers
- Lighting Connectors
- PUSH WIRE® Splicing Connectors
- PUSH WIRE® Inline Splicing Connectors
- Luminaire Disconnect Connectors
- Gelboxes for Splicing Connectors
- Junction Box
- Cable Repair Set
- Splicing Connector Sets
- Accessories and Tools



WAGO TOPJOB® S Rail-Mount Terminal Block Systems

- Rail-Mount Terminal Blocks TOPJOB® S
- Rail-Mount Terminal Blocks with a Pluggable Connector X-COM®-SYSTEM
- Installation Rail-Mount Terminal Blocks TOPJOB® S
- Miniature Rail-Mount Terminal Blocks TOPJOB® S
- High-Current Rail-Mount Terminal Blocks
- Accessories and Tools



WAGO Rail-Mount Terminal Blocks Classic

- Rail-Mount Terminal Blocks Classic
- Rail-Mount Terminal Blocks with a Pluggable Connector X-COM®-SYSTEM
- Patchboard Systems
- Busbar Terminal Blocks
- Rail-Mount Terminal Blocks Mini
- Modular Terminal Blocks and WAGO Terminal Strips
- Chassis-Mount Terminal Strips
- Field-Wiring Terminal Blocks

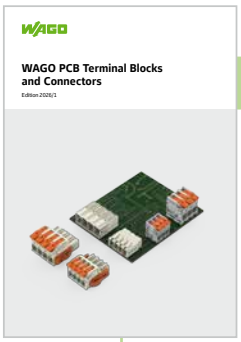

WAGO PCB Terminal Blocks and Connectors

- PCB Terminal Blocks (THT; THR; SMD)
- *MULTI CONNECTION SYSTEM (MCS)*
- *picoMAX®; picoMAX® eCom*
- Pluggable PCB Terminal Blocks
- Feedthrough Terminal Strips
- Special Connectors
- Modulare Empty Housing
- Accessories and Tools



WAGO Pluggable Connection System *WINSTA®*

- Pluggable Connectors
- Snap-In Device Connectors
- Pluggable PCB Connectors
- Distribution Connectors
- Cable Assemblies
- Flat Cable Systems
- Distribution Boxes
- Accessories and Tools



WAGO Automation Technology

- Solutions & Software
- Operating & Monitoring
- Controllers, Edge Devices
- Modular I/O-SYSTEM IP20, I/O-SYSTEM IP67
- Industrial Switches
- Radio Technology
- IP67 Sensor/Actuator Boxes, IP67 Cables and Connectors



WAGO Interface Technology

- Coupler Relays
- Solid-Stae Relays
- Signal Conditioners and Isolation Amplifiers
- Energy Measurement Technology
- System Wiring
- Component Modules
- Empty Housing
- Protective Devices and Protective Electronics
- Accessories and Tools



WAGO Power Supply Systems

- Power Supplies; 1-Phase
- Power Supplies; 3-Phase
- Special Supplies
- Circuit Protection
- DC/DC Converters
- UPS Chargers and Controllers and Capacitive Buffer Modules
- Redundancy Modules
- Energy Measurement Technology
- Potential Distribution
- Accessories and Tools

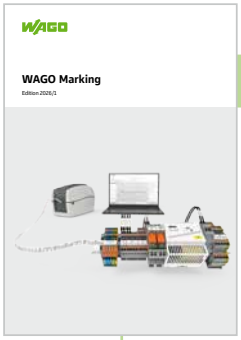

WAGO Marking

- Thermal Transfer Smart Printer
- Digital Engineering – Smart Data
- Products for the Smart Printer
- Printed Products
- Plain Products
- Marker Carriers

About this Catalog

Our digital catalogs provide several search and navigation features to help you quickly find the information you need.
This page introduces the key functions of the catalog.

Searching the Catalog

To search for specific terms within the catalog, follow these steps:

- Open the search dialog via **Edit** > **Find** or by clicking the **magnifying glass icon**. Alternatively, use the **Ctrl** + **F** keyboard shortcut.
- Enter your search term in the search field.
- Click **Next** to move to the next search result.

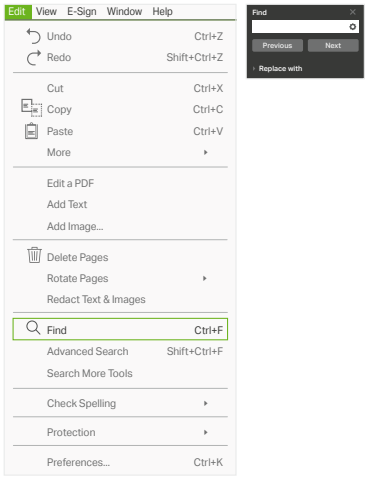

Navigating with Bookmarks

This PDF includes bookmarks to help you quickly and easily find specific sections. With a single click, you can jump directly to a chapter in the catalog.

- Open the bookmark panel by clicking the **bookmark icon**.
- To navigate to a chapter, click the relevant bookmark in the bookmark panel. The corresponding catalog page will then be displayed.

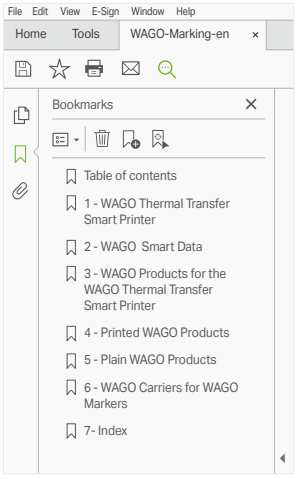

Navigating with the Table of Contents

Our table of contents includes clickable page numbers, allowing you to jump directly to the corresponding catalog page.



You can also find additional clickable page numbers in the selection guides and the item number index.

Links

To help you access additional information easily, this catalog includes links to various websites. These links may provide further product details, installation notes or quick access to important documents such as data sheets.

One example is our **item numbers**, which contain links to the corresponding product detail pages on our website. Simply click an item number to open the relevant product detail page.

You can identify links in this catalog by the presence of a URL in the link text (e.g., www.wago.com). In most cases, links are also underlined for easy recognition.



WAGO PCB Terminal Blocks and Connectors

		Seite
	**WAGO PCB Terminal Blocks**	17
	**WAGO THR PCB Terminal Blocks**	277
	**WAGO SMD PCB Terminal Blocks**	353
	**WAGO *MULTI CONNECTION SYSTEM* (*MCS*) MICRO** Pin Spacing 2,5 mm / 0,08 … 0,5 mm² (28 … 20 AWG)	413
	**WAGO *MULTI CONNECTION SYSTEM* (*MCS*) MINI** Pin Spacing: 3.5 mm (0.138 inch), 3.81 mm (0.15 inch) / 0.08 … 1.5 mm² (28 … 14 AWG)	437
	**WAGO *MULTI CONNECTION SYSTEM* (*MCS*) MINI HD** Pin Spacing: 3.5 mm (0.138 inch) / 0.08 … 1.5 mm² (28 … 16 AWG)	513
	**WAGO *MULTI CONNECTION SYSTEM* (*MCS*) MINI SL** Pin Spacing: 3.5 mm (0.138 inch) / 0.2 … 1.5 mm² (24 … 16 AWG)	539
	**WAGO *MULTI CONNECTION SYSTEM* (*MCS*) MIDI** Pin Spacing: 5 mm (0.197 inch), 7.5 mm (0.295 inch) / 0.08 … 2.5 mm² (28 … 12 AWG)	549
	**WAGO *MULTI CONNECTION SYSTEM* (*MCS*) MIDI Classic** Pin Spacing: 5 mm (0.197 inch), 5.08 mm (0.2 inch), 7.5 mm (0.295 inch), 7.62 mm (0.3 inch) / 0.08 … 2.5 mm² (28 … 12 AWG)	655
	**WAGO *MULTI CONNECTION SYSTEM* (*MCS*) MAXI 6** **Pin Spacing:** 7.62 mm / 0.5 … 10 mm² **WAGO *MULTI CONNECTION SYSTEM* (*MCS*) MAXI 16** **Pin Spacing:** 10.16 mm / 0.5 … 16 mm²	841
	**WAGO *picoMAX*®** Pin Spacing: 3.5 mm; 5 mm; 7.5 mm / 0,2 … 2.5 mm²	883
	**WAGO *picoMAX*® *eCom*** Pin Spacing: 3.5 mm; 5 mm; 7.5 mm / 0.2 … 2.5 mm²	965
	**Pluggable WAGO PCB Terminal Blocks** Pin Spacing: 3.5 mm (0.138 inch), 5 mm (0.197 inch), 5.75 mm (0.226 inch)	993
	**WAGO Feedthrough Terminal Strips**	1005
	**WAGO Specialty Connectors** **WAGO** Wire-Tap Branch Connectors; **WAGO** Connectors for KNX/EIB Applications	1037
	**Modular WAGO Empty Housings**	1051
	**WAGO Accessories and WAGO Tools**	1063
	**Technical Section**	1093
	**Index** **Current addresses at www.wago.com**	1147

PCB Terminal Blocks
– Product Overview by Pin Spacing –

2.5 mm, 2,54 mm	3 mm	3.5 mm, 3.81 mm		4 mm
233 Series  CAGE CLAMP® 0.08 … 0.5 mm² / 28 … 20 AWG page 20	2059 Series SMT  PUSH WIRE® 0.14 … 0.34 mm² / 26 … 22 AWG "sol." page 354	739 Series  CAGE CLAMP® 0.08 … 1.5 mm² / 28 … 14 AWG page 78	235 Series 3.81 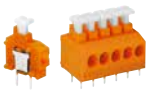 0.5 … 1.5 mm² / 20 … 16 AWG page 241	2060 Series THR  PUSH-IN CAGE CLAMP® 0.2 … 0.75 mm² / 24 … 18 AWG page 358
218 Series  CAGE CLAMP® 0.08 … 0.5 mm2 / 28 … 20 AWG page 96	2059 Series SMT  PUSH WIRE® 0.5 mm² / 20 AWG "sol." page 354	2086 Series THR 3.5  PUSH-IN CAGE CLAMP® 0.14 … 1.5 mm² / 28 … 16 AWG page 380		2060 Series THR  0.2 … 0.75 mm² / 24 … 18 AWG page 280
218 Series THR  0.08 … 0.5 mm² / 28 … 20 AWG page 344	2075 Series SMT  0.34 … 07.5 mm² / 20 … 18 AWG page 372	805 Series  PUSH-IN CAGE CLAMP® 0.2 … 1.5 mm² / 24 … 16 AWG page 190	805 Series 3.5 THR  PUSH-IN CAGE CLAMP® 0.2 … 1.5 mm² / 24 … 16 AWG page 338	2060 Series SMT  PUSH-IN CAGE CLAMP® 0.2 … 0.75 mm² / 24 … 18 AWG page 358
233 Series  CAGE CLAMP® 0.08 … 0.5 mm² / 28 … 20 AWG page 100		250 Series 3.5  0.2 … 1.5 mm² / 24 … 16 AWG page 170	250 Series THR 3.5  0.2 … 1.5 mm² / 24 … 16 AWG page 332	2060 Series  0.2 … 0.75 mm² / 24 … 18 AWG page 280
234 Series  CAGE CLAMP® 0.08 … 0.5 mm2 / 28 … 20 AWG page 102		2601 Series 3.5  PUSH-IN CAGE CLAMP® 0.14 … 1.5 mm² / 26 … 16 AWG page 198	235 Series 3.81 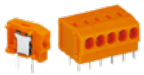 PUSH WIRE® 0.5 … 1.5 mm2 / 20 … 16 AWG "sol." page 228	
250 Series  PUSH-IN CAGE CLAMP® 0.2 … 0.5 mm2 / 24 … 20 AWG page 166		744 Series 3.5  PUSH WIRE® 0.5 … 1.5 mm2 / 20 … 16 AWG "sol." page 238		
250 Series THR 2,5  PUSH-IN CAGE CLAMP® 0.2 … 0.5 mm2 / 24 … 20 AWG page 332				

THR Through-Hole-Reflow Soldering SMT Surface Mount Technology Only available in this pin spacing!

5 mm, 5.08 mm

236 Series

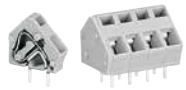

0.08 … 2.5 mm² / 28 … 12* AWG
page 22

236 Series



0.08 … 2.5 mm² / 28 … 12* AWG
page 340

745 Series



0.08 … 4 mm² / 28 … 12 AWG
page 36

745 Series



0.08 … 4 mm² / 28 … 12 AWG
page 42

739 Series



0.08 … 2.5 mm² / 28 … 12* AWG
page 82

2086 Series



0.14 … 1.5 mm² / 28 … 16 AWG
page 382

2086 Series



0.14 … 1.5 mm² / 28 … 16 AWG
page 294

816 Series



2 x 0.2 … 1.5 mm² / 2 x 24 … 16 AWG
page 142

Disconnect Terminal Blocks for Test and Measurement, 742 Series



0.08 … 2.5 mm² / 28 … 12* AWG
page 246

Terminal Blocks with Jumper Slots, 742 Series



0.08 … 2.5 mm² / 28 … 12* AWG
page 250

Fuse Terminal Blocks, 742 Series



0.08 … 2.5 mm² / 28 … 12* AWG
page 254

804 Series



0.25 … 2.5 mm² / 20 … 12 AWG
page 196

736 Series



0.08 … 2.5 mm² / 28 … 12* AWG
page 59

737 Series



0.08 … 2.5 mm² / 28 … 12* AWG
page 67

738 Series



0.08 … 2.5 mm² / 28 … 12* AWG
page 74

740 Series



0.08 … 2.5 mm² / 28 … 12* AWG
page 92

255 Series



0.08 … 2.5 mm² / 28 … 12* AWG
page 106

256 Series

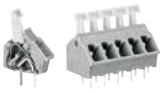

0.08 … 2.5 mm² / 28 … 12* AWG
page 112

257 Series



0.08 … 2.5 mm² / 28 … 12* AWG
page 122

2604 Series



0.2 … 4 mm² / 24 … 12 AWG
page 206

235 Series



0.5 … 1.5 mm² / 20 … 14 AWG
pgage 180

250 Series



0.5 … 1.5 mm² / 20 … 14 AWG
page 174

250 Series



2 x 0.5 … 1.5 mm² / 20 … 14 AWG
page 176

2624 Series



0.2 … 6 mm² / 24 … 10 AWG
page 146

235 Series



0.5 … 2.5 mm² / 20 … 14 AWG "sol."
page 226

254 Series

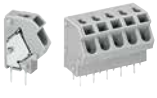

0.5 … 2.5 mm² / 20 … 12* AWG "sol."
page 234

253 Series



2 x 0.5 … 1.5 mm2 / 2 x 20 … 16 AWG "sol."
page 242

Feedthrough Terminal Strips, 741 Series



0.08 … 2.5 mm² / 28 … 12* AWG
page 1022

Feedthrough Terminal Strips, 231 and 731 Series



0.08 … 2.5 mm² / 28 … 12* AWG
page 1030

6 mm, 6.5 mm

2061 Series



0.5 … 1.5 mm² / 20 … 16 AWG
page 286

2061 Series



0.5 … 1.5 mm² / 20 … 16 AWG
page 286

2061 Series



0.5 … 1.5 mm² / 20 … 16 AWG
page 364

2061 Series



0.5 … 1.5 mm² / 20 … 16 AWG
page 364

2070 Series



0.2 … 0.75 mm² / 24 … 18 AWG
page 374

2065 Series



0.2 … 0.75 mm² / 24 … 18 AWG
page 371

Ex Zulassung Ex e II

THR Through-Hole-Reflow Soldering

SMT Surface Mount Technology

Only available in this pin spacing!

PCB Terminal Blocks
– Product Overview by Pin Spacing –

7.5 mm, 7.62 mm			8 mm	10 mm, 10.16 mm
236 Series  CAGE CLAMP® 0.08 … 2.5 mm² / 28 … 12* AWG page 24	245 Series  CAGE CLAMP® 0.08 … 4 mm² / 28 … 12 AWG page 38	2604 Series  PUSH-IN CAGE CLAMP® 0.08 … 4 mm² / 28 … 12 AWG page 202	2060 Series  PUSH-IN CAGE CLAMP® 0.2 … 0.75 mm² / 24 … 18 AWG page 362	236 Series  CAGE CLAMP® 0.08 … 2.5 mm² / 28 … 12* AWG page 26
739 Series  CAGE CLAMP® 0.08 … 2.5 mm² / 28 … 12* AWG page 86	2601 Series  0,14 … 1,5 mm² / 26 … 16 AWG page 198	2624 Series  PUSH-IN CAGE CLAMP® 0.2 … 6 mm² / 24 … 10 AWG page 148	2060 Series  PUSH-IN CAGE CLAMP® 0.2 … 0.75 mm² / 24 … 18 AWG page 284	745 Series  CAGE CLAMP® 0.2 … 6 mm² / 24 … 10 AWG page 46
745 Series  CAGE CLAMP® 0.2 … 4 mm² / 28 … 12 AWG page 44	745 Series  CAGE CLAMP® 0.2 … 6 mm² / 24 … 10 AWG page 50	2606 Series  PUSH-IN CAGE CLAMP® 0.2 … 10 mm² / 24 … 8 AWG page 214	2060 Series  PUSH-IN CAGE CLAMP® 0.2 … 0.75 mm² / 24 … 18 AWG page 284	745 Series  CAGE CLAMP® 0.08 … 4 mm² / 28 … 12 AWG page 44
736 Series  CAGE CLAMP® 0.08 … 2.5 mm² / 28 … 12* AWG page 60	737 Series  CAGE CLAMP® 0.08 … 2.5 mm² / 28 … 12* AWG page 68	2626 Series  PUSH-IN CAGE CLAMP® 0.2 … 10 mm 2 / 24 … 8 AWG page 152		736 Series  CAGE CLAMP® 0.08 … 2.5 mm² / 28 … 12* AWG page 61
255 Series  CAGE CLAMP® 0.08 … 2.5 mm² / 28 … 12* AWG page 106	256 Series  CAGE CLAMP® 0.08 … 2.5 mm² / 28 … 12* AWG page 112	257 Series  CAGE CLAMP® 0.08 … 2.5 mm² / 28 … 12* AWG page 122		255 Series  CAGE CLAMP® 0.08 … 2.5 mm² / 28 … 12* AWG page 106
235 Series  PUSH-IN CAGE CLAMP® 0.5 … 1.5 mm² / 20 … 14 AWG page 180	250 Series  PUSH-IN CAGE CLAMP® 0.5 … 1.5 mm² / 20 … 14 AWG page 174	804 Series  PUSH-IN CAGE CLAMP® 0.25 … 2.5 mm² / 22 … 12 AWG page 196		235 Series  PUSH-IN CAGE CLAMP® 0.5 … 1.5 mm² / 20 … 14 AWG page 180
2706 Series  CAGE CLAMP® 0.5 … 6 mm² / 20 … 10 AWG page 134	2706 Series  CAGE CLAMP® 0.5 … 6 mm² / 20 … 10 AWG page 136	746 Series  PUSH-IN CAGE CLAMP® 2 x 0.5 … 10 mm² / 2 x 20 … 8 AWG page 144		2706 Series  CAGE CLAMP® 0.5 … 6 mm² / 20 … 10 AWG page 134
235 Series  PUSH WIRE® 0.5 … 2.5 mm² / 20 … 14 AWG "sol." page 224	254 Series  PUSH WIRE® 0.5 … 2.5 mm² / 20 … 12* AWG "sol." page 180	Feedthrough Terminal Strips, 741 Series  CAGE CLAMP® 0.08 … 2.5 mm² / 28 … 12* AWG page 1022		235 Series  PUSH WIRE® 0.5 … 2.5 mm² / 20 … 14 AWG "sol." page 224

Ex Zulassung Ex e II THR Through-Hole-Reflow Soldering SMT Surface Mount Technology Only available in this pin spacing!

10 mm, 10.16 mm		11.5 mm, 12.5 mm	15 mm	20 mm
745 Series 10  CAGE CLAMP® 0.08 … 4 mm² / 28 … 12 AWG page 24		745 Series 12.5  CAGE CLAMP® 0.08 … 4 mm² / 28 … 12 AWG page 38	745 Series  CAGE CLAMP® 0.2 … 6 mm² / 24 … 10 AWG page 46	745 Series  CAGE CLAMP® 0.2 … 16 mm² / 24 … 6 AWG page 52
739 Series  CAGE CLAMP® 0.08 … 2.5 mm² / 28 … 12* AWG page 90	2616 Series 10 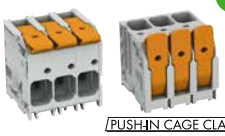 PUSH-IN CAGE CLAMP® 0.75 … 16 mm² / 18 … 4 AWG page 220	2604 Series 11.5  PUSH-IN CAGE CLAMP® 0.2 … 4 mm² / 24 … 12 AWG page 202		
745 Series 10 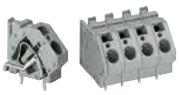 CAGE CLAMP® 0.2 … 6 mm² / 24 … 10 AWG page 42	745 Series 10  CAGE CLAMP® 0.2 … 16 mm² / 24 … 6 AWG page 38	745 Series 12.5  CAGE CLAMP® 0.2 … 4 mm² / 24 … 10 AWG page 46	745 Series  CAGE CLAMP® 0.2 … 16 mm² / 24 … 6 AWG page 52	
737 Series  CAGE CLAMP® 0.08 … 2.5 mm² / 28 … 12* AWG page 66	2636 Series 10  PUSH-IN CAGE CLAMP® 0.75 … 16 mm² / 18 … 4 AWG page 154	2624 Series 11.5  PUSH-IN CAGE CLAMP® 0.2 … 6 mm² / 24 … 10 AWG page 148		
256 Series  CAGE CLAMP® 0.08 … 2.5 mm² / 28 … 12* AWG page 112	257 Series  CAGE CLAMP® 0.08 … 2.5 mm² / 28 … 12* AWG page 122	2601 Series  0,14 … 1,5 mm² / 26 … 16 AWG page 198	2716 Series  CAGE CLAMP® 1.5 … 16 mm² / 16 … 6 AWG page 140	
2716 Series 10  CAGE CLAMP® 1.5 … 16 mm² / 16 … 6 AWG page 140	2716 Series 10  CAGE CLAMP® 1.5 … 16 mm² / 16 … 6 AWG page 140		2716 Series  CAGE CLAMP® 1.5 … 16 mm² / 16 … 6 AWG page 140	
2706 Series 10  CAGE CLAMP® 0.5 … 6 mm² / 20 … 10 AWG page 134		2706 Series 12.5  CAGE CLAMP® 0.5 … 6 mm² / 20 … 10 AWG page 134		
254 Series  PUSH WIRE® 0.5 … 2.5 mm² / 20 … 12 AWG "sol." page 234	Feedthrough Terminal Strips, 741 Series  CAGE CLAMP® 0.08 … 2.5 mm² / 28 … 12* AWG page 1022			

Ex Zulassung Ex e II

10 Only available in this pin spacing!

MCS – MULTI CONNECTION SYSTEM
– Product Overview by Pin Spacing –

2.5 mm MICRO*

Female Connectors, 733 Series



CAGE CLAMP®

0.08 … 0.5 mm² / 28 … 20 AWG

page 416

Female Connectors, with locking levers, 733 Series



CAGE CLAMP®

0.08 … 0.5 mm² / 28 … 20 AWG

page 416

Male Headers, with solder pins, 733 Series



CAGE CLAMP®

page 420

Male Headers, with solder pins, 733 Series



page 424

Male Connectors, 733 Series



CAGE CLAMP®

0.08 … 0.5 mm² / 28 … 20 AWG

page 418

3.5 mm, 3.81 mm MINI*

Female Connectors, 734 Series



CAGE CLAMP®

0.08 … 1.5 mm² / 28 … 14 AWG

page 440

Female Connectors, with snap-in mounting feet, 734 Series



CAGE CLAMP®

0.08 … 1.5 mm² / 28 … 14 AWG

page 442

Female Connectors, with push-buttons and mounting flanges, 2734 Series



PUSH-IN CAGE CLAMP®

0.2 … 1.5 mm² / 24 … 14 AWG

page 446

Female Connectors, with locking levers, 2734 Series



PUSH-IN CAGE CLAMP®

0.14 … 1.5 mm² / 26 … 14 AWG

page 434

Male Headers, with solder pins and threaded flanges, 734 Series

3.5



page 462

Male Connectors, 734 Series



CAGE CLAMP®

0.08 … 1.5 mm² / 28 … 14 AWG

page 450

Male Connectors, with snap-in mounting feet, 734 Series



CAGE CLAMP®

0.08 … 1.5 mm² / 28 … 14 AWG

page 450

Combi Strips, 734 Series

3.5



CAGE CLAMP®

0.08 … 1.5 mm² / 28 … 14 AWG

page 454

Female Connectors, with locking levers, 734 Series



CAGE CLAMP®

0.08 … 1.5 mm² / 28 … 14 AWG

page 440

Female Connectors, with push-buttons, 2734 Series



PUSH-IN CAGE CLAMP®

0.2 … 1.5 mm² / 24 … 14 AWG

page 444

Female Connectors, with push-buttons and screw flanges, 2734 Series

3.5



PUSH-IN CAGE CLAMP®

0.2 … 1.5 mm² / 24 … 14 AWG

page 444

Female Connectors, with locking levers, 2734 Series



PUSH-IN CAGE CLAMP®

0.14 … 1.5 mm² / 26 … 14 AWG

page 438

Double-Deck Male Headers, with solder pins, 734 Series



page 462

Male Connectors, with mounting flanges, 734 Series



CAGE CLAMP®

0.08 … 1.5 mm² / 28 … 14 AWG

page 452

Female Headers, with solder pins, 734 Series



page 450

Combi Strips, with snap-in mounting feet, 734 Series

3.5



CAGE CLAMP®

0.08 … 1.5 mm² / 28 … 14 AWG

page 454

Female Connectors, with screw flanges, 734 Series



CAGE CLAMP®

0.08 … 1.5 mm² / 28 … 14 AWG

page 440

Female Connectors, with push-buttons and locking levers, 2734 S



PUSH-IN CAGE CLAMP®

0.2 … 1.5 mm² / 24 … 14 AWG

page 444

Female Connectors, with push-buttons, 2734 Series



PUSH-IN CAGE CLAMP®

0.2 … 1.5 mm² / 24 … 16 AWG

page 444

Female Connectors, 2734 Serie



PUSH-IN CAGE CLAMP®

0.14 … 1.5 mm² / 26 … 14 AWG

page 438

Male Headers, with solder pins, 734 Series

THR



page 468

Male Connectors, with threaded flanges, 734 Series

3.5



CAGE CLAMP®

0.08 … 1.5 mm² / 28 … 14 AWG

page 450

Female Headers, with solder pins and locking levers, 734 Series



page 458

3.5 mm MINI HD*

Female Connectors, 713 Series



CAGE CLAMP®

0.08 … 1.5 mm² / 28 … 16 AWG

page 516

Female Connectors, with levers, 713 Series



CAGE CLAMP®

0.08 … 1.5 mm² / 28 … 16 AWG

page 516

Female Connectors, with screw flanges, 713 Series



CAGE CLAMP®

0.08 … 1.5 mm² / 28 … 16 AWG

page 516

Male Headers, with solder pins, 713 Series

THR



page 518

Male Headers, with solder pins and levers, Serie 713

THR



page 529

Male Headers, with solder pins and threaded flanges, 713 Series

THR

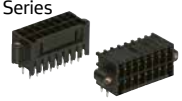

page 527

Panel Feedthrough Male Connectors, 713 Series



page 532

THR Through-Hole-Reflow-Technology

Only available in this pin spacing!

3.5 mm MINI SL	5 mm, MIDI*			
Female Connectors, 714 Series  PUSH-IN CAGE CLAMP® 0.2 … 1.5 mm² / 24 … 16 AWG page 542	Female Connectors, 721 Series  CAGE CLAMP® 0.08 … 2.5 mm² / 28 … 12 AWG page 552	Female Connectors, with locking levers, 721 Series  CAGE CLAMP® 0.08 … 2.5 mm² / 28 … 12 AWG page 552	Female Connectors, with mounting flanges, 721 Series  CAGE CLAMP® 0.08 … 2.5 mm² / 28 … 12 AWG page 552	Female Connectors, with snap-in mounting feet, 721 Series  CAGE CLAMP® 0.08 … 2.5 mm² / 28 … 12 AWG page 552
Male Headers, with solder pins, 714 Series  page 544	Angled Female Connectors, 722 Series  CAGE CLAMP® 0.08 … 2.5 mm² / 28 … 12 AWG page 556	Female Connectors, with flanges for panel mounting, 721 Series  CAGE CLAMP® 0.08 … 2.5 mm² / 28 … 12 AWG page 558	Female Connectors, with snap-in feet for panel mounting, 721 Series  CAGE CLAMP® 0.08 … 2.5 mm² / 28 … 12 AWG page 558	Female Connectors, with snap-in flanges, 721 Series  0.08 … 2.5 mm² / 28 … 12 AWG Seite 552
	Female Connectors, with push-buttons, 2721 Series  PUSH-IN CAGE CLAMP® 0.2 … 2.5 mm² / 24 … 12 AWG page 562	Female Connectors, with push-buttons and snap-in mounting feet, 2721 Series  PUSH-IN CAGE CLAMP® 0.2 … 2.5 mm² / 24 … 12 AWG page 562	Female Connectors, with push-buttons and locking levers, 2721 Series  PUSH-IN CAGE CLAMP® 0.2 … 2.5 mm² / 24 … 12 AWG page 562	Female Connectors, with push-buttons and mounting flanges, 2721 Series  PUSH-IN CAGE CLAMP® 0.2 … 2.5 mm² / 24 … 12 AWG page 564
	2-Conductor Female Connectors, 721 Series  PUSH-IN CAGE CLAMP® 0.2 … 2.5 mm² / 24 … 12 AWG page 560	2-Conductor Female Connectors, with locking levers, 721 Series  PUSH-IN CAGE CLAMP® 0.2 … 2.5 mm² / 24 … 12 AWG page 560	Female Connectors, 2721 Series  PUSH-IN CAGE CLAMP® 0.14 … 1.5 mm² / 26 … 14 AWG page 566	Female Connectors, with locking levers, 2721 Series  PUSH-IN CAGE CLAMP® 0.14 … 1.5 mm² / 26 … 14 AWG page 566
	Male Headers, with solder pins, 721 Series  page 586			Male Connectors, 2721 Series  PUSH-IN CAGE CLAMP® 0,2 … 2,5 mm² / 24 … 12 AWG Seite 576
	Male Connectors, 721 Series  CAGE CLAMP® 0.08 … 2.5 mm² / 28 … 12 AWG page 568	Male Connectors, with snap-in mounting feet, 721 Series  CAGE CLAMP® 0.08 … 2.5 mm² / 28 … 12 AWG page 568	Male Connectors, with mounting flanges, 721 Series  CAGE CLAMP® 0.08 … 2.5 mm² / 28 … 12 AWG page 568	Male Connectors, with snap-in flanges, 721 Series  CAGE CLAMP® 0.08 … 2.5 mm² / 28 … 12 AWG page 568
	Female Headers, with solder pins, 722 Series  page 582	Female Headers, with solder pins and locking levers, 722 Series  page 582	Female Headers, with solder pins and mounting flanges, 722 Series  page 582	Female Headers, with solder pins and spacers, 722 Series  page 582

*100 % protected against mismating

MCS – MULTI CONNECTION SYSTEM
– Product Overview by Pin Spacing –

5 mm, 5.08 mm MIDI Classic

Female Connectors, 231 Series  CAGE CLAMP® 0.08 … 2.5 mm² / 28 … 12 AWG page 658	Female Connectors, with integrated end plate, 231 Series  CAGE CLAMP® 0.08 … 2.5 mm² / 28 … 12 AWG page 658	Female Connectors, with snap-in mounting feet, 231 Series  CAGE CLAMP® 0.08 … 2.5 mm² / 28 … 12 AWG page 658	Female Connectors, with locking levers, 231 Series  CAGE CLAMP® 0.08 … 2.5 mm² / 28 … 12 AWG page 658	Female Connectors, with mounting flanges, 231 Series  CAGE CLAMP® 0.08 … 2.5 mm² / 28 … 12 AWG page 658
Female Connectors, with snap-in flanges, 231 Series 5  CAGE CLAMP® 0.08 … 2.5 mm² / 28 … 12 AWG page 658	Angled Female Connectors, 232 Series  CAGE CLAMP® 0.08 … 2.5 mm² / 28 … 12 AWG page 658	Female Connectors, with screw flanges, 231 Series 5.08  CAGE CLAMP® 0.08 … 2.5 mm² / 28 … 12 AWG page 706	Female Connectors, with flanges for panel mounting, 731 Series 5  CAGE CLAMP® 0.08 … 2.5 mm² / 28 … 12 AWG page 664	Female Connectors, with snap-in feet for panel mounting, 731 Series 5  CAGE CLAMP® 0.08 … 2.5 mm² / 28 … 12 AWG page 664
Female Connectors, with push-buttons, 2231 Series  PUSH-IN CAGE CLAMP® 0.08 … 2.5 mm² / 28 … 12 AWG page 670	Female Connectors, with push-buttons and integrated end and intermediate plate, 2231 Series  PUSH-IN CAGE CLAMP® 0.08 … 2.5 mm² / 28 … 12 AWG page 670	Female Connectors, with push-buttons and snap-in mounting feet, 2231 Series  PUSH-IN CAGE CLAMP® 0.08 … 2.5 mm² / 28 … 12 AWG page 670	Female Connectors, with push-buttons and locking levers, 2231 Series  PUSH-IN CAGE CLAMP® 0.08 … 2.5 mm² / 28 … 12 AWG page 670	Female Connectors, with push-buttons and mounting flanges, 2231 Series  PUSH-IN CAGE CLAMP® 0.08 … 2.5 mm² / 28 … 12 AWG page 670
Female Connectors, with push-buttons and screw flanges, 2231 Series 5.08  PUSH-IN CAGE CLAMP® 0.08 … 2.5 mm² / 28 … 12 AWG page 716	2-Conductor Female Connectors, 231 Series  PUSH-IN CAGE CLAMP® 0.08 … 2.5 mm² / 28 … 12 AWG page 670	2-Conductor Female Connectors, with locking levers, 231 Series  PUSH-IN CAGE CLAMP® 0.08 … 2.5 mm² / 28 … 12 AWG page 670	2-Conductor Female Connectors, with screw flanges, 231 Series 5.08  PUSH-IN CAGE CLAMP® 0.08 … 2.5 mm² / 28 … 12 AWG page 712	Femaile Connectors, with push-buttons, 2231 Series  PUSH-IN CAGE CLAMP® 0.2 … 2.5 mm² / 24 … 12 AWG page 670
Female Connectors, with push-buttons and locking levers, 2231 Series  PUSH-IN CAGE CLAMP® 0.2 … 2.5 mm² / 24 … 12 AWG page 670	Female Connectors, with push-buttons and locking levers, 2231 Series  PUSH-IN CAGE CLAMP® 0.2 … 2.5 mm² / 24 … 12 AWG page 674	Male Headers, with solder pins, 231 Series  page 686	Male Headers, with solder pins and mounting flanges, 5 231 Series  page 686	Male Headers, with solder pins and threaded flanges, 5.08 231 Series 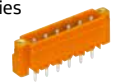 page 730
Male Headers for Double-Deck Assembly, 232 Series  page 690	Male Headers, with solder pins, 231 Series 5  page 698	Male Connectors, 231 Series  CAGE CLAMP® 0.08 … 2.5 mm² / 28 … 12 AWG page 676	Male Connectors, with snap-in mounting feet, 231 Series  CAGE CLAMP® 0.08 … 2.5 mm² / 28 … 12 AWG page 670	Male Connectors, with mounting flanges, 231 Series  CAGE CLAMP® 0.08 … 2.5 mm² / 28 … 12 AWG page 712
Male Connectors, with snap-in flanges, 231 Series  CAGE CLAMP® 0.08 … 2.5 mm² / 28 … 12 AWG page 676	Male Connectors, with threaded flanges, 5.08 231 Series  CAGE CLAMP® 0.08 … 2.5 mm² / 28 … 12 AWG page 720	Male Connectors, with snap-in and threaded flanges, 5.08 231 Series  CAGE CLAMP® 0.08 … 2.5 mm² / 28 … 12 AWG page 720	Female Headers, with solder pins, 232 Series  page 682	Female Headers, with solder pins and locking levers, 232 Series  page 682
Female Headers, with solder pins and mounting flanges, 232 Series  page 682	Female Headers, with solder pins and spacers, 232 Series  page 682			

Only available in this pin spacing!

7.5 mm MIDI*

Female Connectors, 721 Series  CAGE CLAMP® 0.08 … 2.5 mm² / 28 … 12 AWG page 594	Female Connectors, with snap-in mounting feet, 721 Series  CAGE CLAMP® 0.08 … 2.5 mm² / 28 … 12 AWG page 594	Female Connectors, with locking levers, 721 Series  CAGE CLAMP® 0.08 … 2.5 mm² / 28 … 12 AWG page 594
Female Connectors, with mounting flanges, 721 Series  CAGE CLAMP® 0.08 … 2.5 mm² / 28 … 12 AWG page 594	Female Connectors, with flanges for panel mounting, 721 Series  CAGE CLAMP® 0.08 … 2.5 mm² / 28 … 12 AWG page 598	Female Connectors, with snap-in feet for panel mounting, 721 Series  CAGE CLAMP® 0.08 … 2.5 mm² / 28 … 12 AWG page 598
Female Connectors, with push-buttons, 2721 Series  PUSH-IN CAGE CLAMP® 0.2 … 2.5 mm² / 24 … 12 AWG page 602	Female Connectors, with push-buttons and snap-in mounting feet, 2721 Series  PUSH-IN CAGE CLAMP® 0.2 … 2.5 mm² / 24 … 12 AWG page 602	Female Connectors, with push-buttons and locking levers, 2721 Series  PUSH-IN CAGE CLAMP® 0.2 … 2.5 mm² / 24 … 12 AWG page 602
Female Connectors, with push-buttons and mounting flanges, 2721 Series  PUSH-IN CAGE CLAMP® 0.2 … 2.5 mm² / 24 … 12 AWG page 602	2-Conductor Female Connectors, 721 Series  PUSH-IN CAGE CLAMP® 0.2 … 2.5 mm² / 24 … 12 AWG page 600	2-Conductor Female Connectors, with locking levers, 721 Series  PUSH-IN CAGE CLAMP® 0.2 … 2.5 mm² / 24 … 12 AWG page 600
Female Connectors, with levers, 2722 Series  PUSH-IN CAGE CLAMP® 0.2 … 2.5 mm² / 24 … 12 AWG page 606	Female Connectors, with snap-in flanges, 721 Series  0,08 … 2,5 mm² / 28 … 12 AWG Seite 568	Male Headers, with solder pins, 721 Series  page 620
Male Connectors, 723 Series  CAGE CLAMP® 0.08 … 2.5 mm² / 28 … 12 AWG page 608	Male Connectors, with snap-in mounting feet, 723 Series  CAGE CLAMP® 0.08 … 2.5 mm² / 28 … 12 AWG page 608	Male Connectors, with mounting flanges, 723 Series  CAGE CLAMP® 0.08 … 2.5 mm² / 28 … 12 AWG page 608
Male Connectors, with snap-in flanges, 723 Series  CAGE CLAMP® 0.08 … 2.5 mm² / 28 … 12 AWG page 608		Female Headers, with solder pins, 722 Series  page 616
Female Headers, with solder pins and locking levers, 722 Series  page 616	Female Headers, with solder pins and mounting flanges, 722 Series  page 616	Female Headers, with solder pins and spacers, 722 Series  page 616

*100 % protected against mismating

MCS – MULTI CONNECTION SYSTEM
– Product Overview by Pin Spacing –

7.5 mm, 7.62 mm MIDI Classic

Female Connectors, 231 Series  CAGE CLAMP® 0.08 … 2.5 mm² / 28 … 12 AWG page 738	Female Connectors, with snap-in mounting feet, 231 Series  CAGE CLAMP® 0.08 … 2.5 mm² / 28 … 12 AWG page 738	Female Connectors, with locking levers, 231 Series  CAGE CLAMP® 0.08 … 2.5 mm² / 28 … 12 AWG page 738
Female Connectors, with mounting flanges, 231 Series  CAGE CLAMP® 0.08 … 2.5 mm² / 28 … 12 AWG page 738	Angled Female Connectors, 732 Series  CAGE CLAMP® 0.08 … 2.5 mm² / 28 … 12 AWG page 742	Female Connectors, with flanges or snap-in mounting feet for panel mounting, 731 Series 7.5  CAGE CLAMP® 0.08 … 2.5 mm² / 28 … 12 AWG page 744
Female Connectors, with push-buttons, 2231 Series  PUSH-IN CAGE CLAMP® 0.2 … 2.5 mm² / 24 … 12 AWG page 750	Female Connectors, with push-buttons and snap-in mounting feet, 2231 Series  PUSH-IN CAGE CLAMP® 0.2 … 2.5 mm² / 24 … 12 AWG page 750	Female Connectors, with push-buttons and locking levers, 2231 Series  PUSH-IN CAGE CLAMP® 0.2 … 2.5 mm² / 24 … 12 AWG page 750
Female Connectors, with push-buttons and mounting flanges, 2231 Series  PUSH-IN CAGE CLAMP® 0.2 … 2.5 mm² / 24 … 12 AWG page 750	2-Conductor Female Connectors, 231 Series  PUSH-IN CAGE CLAMP® 0.2 … 2.5 mm² / 24 … 12 AWG page 748	2-Conductor Female Connectors, with locking levers, 231 Series  PUSH-IN CAGE CLAMP® 0.2 … 2.5 mm² / 24 … 12 AWG page 748
Female Connectors, with levers, 2232 Series  PUSH-IN CAGE CLAMP® 0.2 … 2.5 mm² / 24 … 12 AWG page 754	Male Headers, with solder pins, 231 Series  page 764	Male Headers, with solder pins and mounting flanges, 231 Series 7.5  page 764
Male Headers, with solder pins, 231 Series 7.5 THR  page 772	Male Connectors, 731 Series  CAGE CLAMP® 0.08 … 2.5 mm² / 28 … 12 AWG page 756	Male Connectors, with snap-in mounting feet, 731 Series  CAGE CLAMP® 0.08 … 2.5 mm² / 28 … 12 AWG page 756
Male Connectors, with mounting flanges, 731 Series  CAGE CLAMP® 0.08 … 2.5 mm² / 28 … 12 AWG page 756	Male Connectors, with snap-in flanges, 731 Series  0.08 … 2.5 mm² / 28 … 12 AWG page 756	Female Headers, with solder pins, 232 Series  page 760
Female Headers, with solder pins and locking levers, 232 Series  page 760	Female Headers, with solder pins and mounting flanges, 232 Series  page 760	Female Headers, with solder pins and spacers, 232 Series  page 760

THR Through-Hole-Reflow Soldering

Only available in this pin spacing!

7.62 mm MAXI 6*

Female Connectors, 831 Series  PUSH-IN CAGE CLAMP® 0.5 … 10 mm² / 20 … 8 AWG page 844	Female Connectors, with levers, 831 Series  PUSH-IN CAGE CLAMP® 0.5 … 10 mm² / 20 … 8 AWG page 846	Female Connectors, with levers and locking levers, 831 Series  PUSH-IN CAGE CLAMP® 0.5 … 10 mm² / 20 … 8 AWG page 846
Female Connectors, with locking levers, 831 Series  PUSH-IN CAGE CLAMP® 0.5 … 10 mm² / 20 … 8 AWG page 844	Female Connectors, with levers and center locking levers, 831 Series  PUSH-IN CAGE CLAMP® 0.5 … 10 mm² / 20 … 8 AWG page 846	Female Connectors, with levers and frontal locking levers, 831 Series  PUSH-IN CAGE CLAMP® 0.5 … 10 mm² / 20 … 8 AWG page 846
Female Connectors with screw flanges, 831 Series  PUSH-IN CAGE CLAMP® 0.5 … 10 mm² / 20 … 8 AWG page 844	Female Connectors, with levers, for DIN-35 rail mounting, 831 Series  PUSH-IN CAGE CLAMP® 0.5 … 10 mm² / 20 … 8 AWG page 846	Female Connectors, with levers and locking levers, for DIN-35 rail mounting, 831 Series  PUSH-IN CAGE CLAMP® 0.5 … 10 mm² / 20 … 8 AWG page 846
Female Headers, with solder pins, 831 Series  page 854		
Male Headers, with solder pins, 831 Series  page 856	Male Headers, with solder pins and threaded flanges, 831 Series  page 856	
Male Connectors, 831 Series  PUSH-IN CAGE CLAMP® 0.5 … 10 mm² / 20 … 8 AWG page 854	Male Connectors, with levers, 831 Series  PUSH-IN CAGE CLAMP® 0.75 … 16 mm² / 18 … 4 AWG page 8852	Male Connectors, with levers, for IN-35 rail mounting, 831 Series  PUSH-IN CAGE CLAMP® 0.5 … 10 mm² / 20 … 8 AWG page 852
Male Connectors, with threaded flanges, 831 Series  PUSH-IN CAGE CLAMP® 0.5 … 10 mm² / 20 … 8 AWG page 850	Male Connectors, with levers, for DIN-35 rail mounting, 831 Series  PUSH-IN CAGE CLAMP® 0.5 … 10 mm² / 20 … 8 AWG page 850	

10.16 mm MAXI 16*

Female Connectors, 832 Series  PUSH-IN CAGE CLAMP® 0.75 … 16 mm² / 18 … 4 AWG page 860	Female Connectors, with lateral locking levers, 832 Series  PUSH-IN CAGE CLAMP® 0.75 … 16 mm² / 18 … 4 AWG page 860
Female Connectors, with center locking levers, 832 Series  PUSH-IN CAGE CLAMP® 0.75 … 16 mm² / 18 … 4 AWG page 860	Female Connectors, with frontal locking levers, 832 Series  PUSH-IN CAGE CLAMP® 0.75 … 16 mm² / 18 … 4 AWG page 860
Female Connectors, with center locking levers and strain relief plates, 832 Series  PUSH-IN CAGE CLAMP® 0.75 … 16 mm² / 18 … 4 AWG page 860	
Female Connectors, for DIN-35 rail mounting, 832 Series  PUSH-IN CAGE CLAMP® 0.75 … 16 mm² / 18 … 4 AWG page 860	Female Connectors, with lateral locking levers, for DIN-35 rail mounting, 832 Series  PUSH-IN CAGE CLAMP® 0.75 … 16 mm² / 18 … 4 AWG page 860
Male Headers, with solder pins, 832 Series  page 866	
Male Connectors, 832 Series  PUSH-IN CAGE CLAMP® 0.5 … 10 mm² / 20 … 8 AWG page 866	Male Connectors, for DIN-35 rail mounting, 832 Series  PUSH-IN CAGE CLAMP® 0.75 … 16 mm² / 18 … 4 AWG page 866

*100 % protected against mismating

Connectors:

picoMAX® 3.5 mm			*picoMAX*® eCOM 3,5 mm
Female Connectors, 2091 Series  PUSH-IN CAGE CLAMP® 0.2 … 1.5 mm² / 24 … 14 AWG page 886	Female Connectors, with push-buttons, 2091 Series  PUSH-IN CAGE CLAMP® 0.2 … 1.5 mm² / 24 … 14 AWG page 886	Female Connectors, with gripping plates and sliding connector releases, 2091 Series  PUSH-IN CAGE CLAMP® 0.2 … 1.5 mm² / 24 … 14 AWG page 886	Female Connectors, with push-buttons, 2091 Series  PUSH-IN CAGE CLAMP® 0.2 … 1.5 mm² / 24 … 14 AWG page 968
Male Connectors, 2091 Series  page 894	Male Connectors, with mounting flanges, 2091 Series  page 894	Male Connectors, 2091 Series THR  page 894	Female Connectors, with push-buttons and gripping plates, 2091 Series  PUSH-IN CAGE CLAMP® page 970
Male Connectors, with mounting flanges, 2091 Series THR  page 894	Pinstrip, 2091 Series  page 898	Male Connectors, 2091 Series THR  page 904	Female Connectors, with push-buttons, 2091 Series THR  0.2 … 1.5 mm² / 24 … 14 AWG page 972
Male Connectors, with release levers, 2091 Series  PUSH-IN CAGE CLAMP® 0.2 … 1.5 mm² / 24 … 14 AWG page 890	Male Connectors, with gripping plates, 2091 Series  PUSH-IN CAGE CLAMP® 0.2 … 1.5 mm² / 24 … 14 AWG page 890	Male Connectors, with release levers and snap-in mounting feet, 2091 Series  PUSH-IN CAGE CLAMP® 0.2 … 1.5 mm² / 24 … 14 AWG page 890	
Female Connectors, 2091 Series  page 892	Female Connectors, 2091 Series THR  page 892	Panel Feedthrough Male Connectors, with mounting flanges, 2091 Serie  page 910	

THR Through-Hole-Reflow Soldering

picoMAX® 5 mm

Female Connectors, 2092 Series  PUSH-IN CAGE CLAMP® 0.2 … 2.5 mm² / 24 … 12 AWG page 912	Female Connectors, with push-buttons, 2092 Series  PUSH-IN CAGE CLAMP® 0.2 … 2.5 mm² / 24 … 12 AWG page 912	Female Connectors, with gripping plates and sliding connector rele… 2092 Series  PUSH-IN CAGE CLAMP® 0.2 … 2.5 mm² / 24 … 12 AWG page 912
Male Connectors, 2092 Series  page 920	Male Connectors, with mounting flanges, 2092 Series  page 920	Male Connectors, 2092 Series THR  page 928
Male Connectors, with mounting flanges, 2092 Series THR  page 928	Pinstrip, 2092 Series  page 932	
Male Connectors, with release levers, 2092 Series  PUSH-IN CAGE CLAMP® 0.2 … 2.5 mm² / 24 … 12 AWG page 916	Male Connectors, with gripping plates, 2092 Series  PUSH-IN CAGE CLAMP® 0.2 … 2.5 mm² / 24 … 12 AWG page 916	Male Connectors, with release levers and snap-in mounting feet, 2092 Series  PUSH-IN CAGE CLAMP® 0.2 … 2.5 mm² / 24 … 12 AWG page 916
Female Connectors, 2092 Series  page 918	Female Connectors, 2092 Series THR  page 926	Panel Feedthrough Male Connectors, with mounting flanges, 2092 Series  page 934

picoMAX® eCOM 5 mm

Female Connectors, with push-buttons, 2092 Series  PUSH-IN CAGE CLAMP® 0.2 … 2.5 mm² / 24 … 12 AWG page 976
Female Connectors, with push-buttons and gripping plates, 2092 Series  PUSH-IN CAGE CLAMP® page 978
Female Connectors, with push-buttons, 2092 Series THR  0.2 … 2.5 mm² / 24 … 12 AWG page 980

THR Through-Hole-Reflow Soldering

MCS – MULTI CONNECTION SYSTEM
– Product Overview by Pin Spacing –

picoMAX® 7.5 mm			*picoMAX*® eCOM 7.5 mm
Female Connectors, 2092 Series  PUSH-IN CAGE CLAMP® 0.2 … 2.5 mm² / 24 … 12 AWG page 936	Female Connectors, with push-buttons, 2092 Series  PUSH-IN CAGE CLAMP® 0.2 … 2.5 mm² / 24 … 12 AWG page 936	Female Connectors, with gripping plates and sliding connector releases, 2092 Series  PUSH-IN CAGE CLAMP® 0.2 … 2.5 mm² / 24 … 12 AWG page 936	Female Connectors, with push-buttons, 2092 Series  PUSH-IN CAGE CLAMP® 0.2 … 2.5 mm² / 24 … 12 AWG page 984
Male Connectors, 2092 Series  page 940	Male Connectors, with mounting flanges, 2092 Series  page 940	Male Connectors, 2092 Series THR  page 940	Female Connectors, with push-buttons and gripping plates, 2092 Series  PUSH-IN CAGE CLAMP® page 986
Male Connectors, with mounting flanges, 2092 Series THR  page 940	Pinstrip, 2092 Series  page 948		Female Connectors, with push-buttons, 2092 Series THR  0.2 … 2.5 mm² / 24 … 12 AWG page 988
Male Connectors, with release levers, 2092 Series  PUSH-IN CAGE CLAMP® 0.2 … 2.5 mm² / 24 … 12 AWG page 940	Male Connectors, with gripping plates, 2092 Series  PUSH-IN CAGE CLAMP® 0.2 … 2.5 mm² / 24 … 12 AWG page 940	Male Connectors, with release levers and snap-in mounting feet, 2092 Series  PUSH-IN CAGE CLAMP® 0.2 … 2.5 mm² / 24 … 12 AWG page 940	
Female Connectors, 2092 Series  page 942	Female Connectors, 2092 Series THR  page 942		

THR Through-Hole-Reflow Soldering

Connectors for:

Pin spacing 3.5 mm

2-Conductor Compact PCB Connectors, 252 Series



PUSH WIRE®

2 x 0.4 … 0.8 mm Ø / 2 x 26 … 20 AWG "sol." page 996

2-Conductor Compact PCB Connectors, 252 Series



PUSH WIRE®

2 x 0.4 … 0.8 mm Ø / 2 x 26 … 20 AWG "sol." page 996

Pin spacing 5 mm, 5.75 mm

2-Conductor PCB Connector Strips (Pinstrip Pluggable), 806 Series



PUSH-IN CAGE CLAMP®

2 x 0.2 … 1.5 mm² / 2 x 24 … 16 AWG page 1000

4-Conductor Modular PCB Connectors, 243 Series



PUSH WIRE®

4 x 0.4 … 0.8 mm ? / 4 x 24 … 18 AWG "sol." page 1002

Special applications

Wire-Tap Branch Connectors, 730 Series



CAGE CLAMP®

0.75 … 1.5 mm² / 18 … 16 AWG page 1044

KNX/EIB applications

Connectors for Bus Coupler Units, 243 Series



PUSH WIRE®

4 x 0.6 … 0.8 mm² / 22 … 20 AWG "sol." page 1052

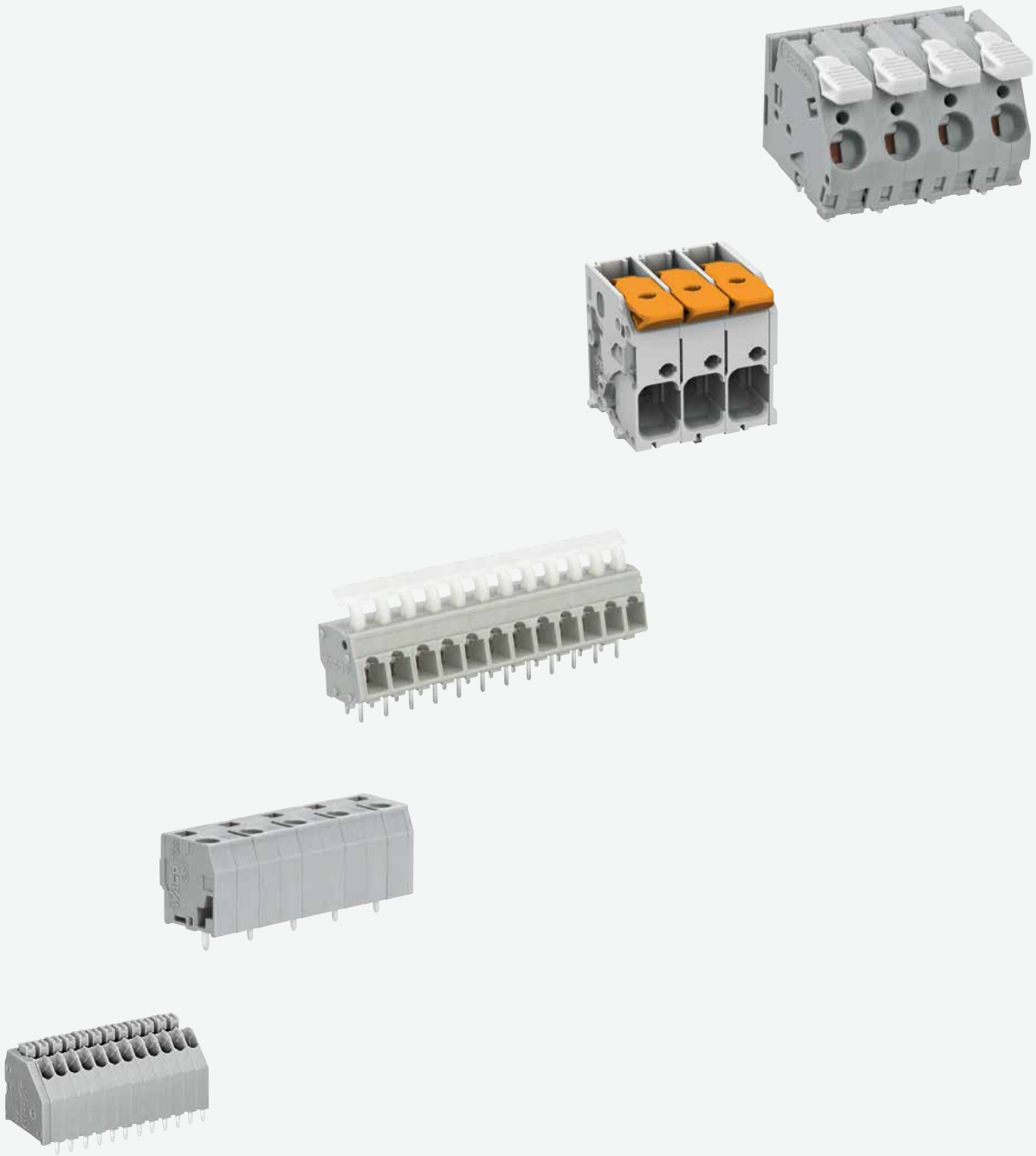

WAGO PCB Terminal Blocks

WAGO PCB Terminal Blocks

	Nominal Cross-Section	Series	Page
 PCB Terminal Blocks ▸ Actuation type: Operating tool ▸ CAGE CLAMP®	0.5 mm²	233	20
	2.5 mm²	236	22
	4; 6; 16 mm²	745	36
	2.5 mm²	736	58
	2.5 mm²	737	66
	2.5 mm²	738	74
	1.5; 2.5 mm²	739	78
	2.5 mm²	740	92
 PCB Terminal Blocks ▸ Actuation type: Push-button, Locking slide, Lever ▸ CAGE CLAMP®	0.5 mm²	218	96
	0.5 mm²	233	100
	0.5 mm²	234	102
	2.5 mm²	255	106
	2.5 mm²	256	112
	2.5 mm²	257	122
	6 mm²	2706	134
	16 mm²	2716	138
 2-Conductor PCB Terminal Blocks ▸ Actuation type: Operating tool ▸ Push-in CAGE CLAMP®	1.5 mm²	816	142
	10 mm²	746	144
 PCB Terminal Blocks ▸ Actuation type: Operating tool ▸ Push-in CAGE CLAMP®	6 mm²	2624	146
	10 mm²	2626	152
	16 mm²	2636	158
 PCB Terminal Blocks ▸ Actuation type: Push-button, Lever ▸ Push-in CAGE CLAMP®	0.5; 1.5 mm²	250	166
	0.75; 1.5 mm²	235	180
	1.5 mm²	805	190
	2.5 mm²	804	196
	1.5 mm²	2601	198
	2.5 mm²	2602	202
	4 mm²	2604	206
	10 mm²	2606	212
	16 mm²	2616	218
 PCB Terminal Blocks ▸ Actuation type: Operating tool ▸ PUSH WIRE®	1.5; 2.5 mm²	235	224
	2.5 mm²	254	234
	1.5 mm²	744	238
 2-conductor PCB Terminal Blocks ▸ Actuation type: Operating tool ▸ PUSH WIRE®	1.5 mm²	253	242
 Modular PCB Disconnect/Test Terminal Blocks ▸ Actuation type: Operating tool ▸ CAGE CLAMP®	2.5 mm²	742	246
Modular PCB Fuse Terminal Blocks ▸ Actuation type: Operating tool ▸ CAGE CLAMP®	2.5 mm²	742	254
 Accessories for PCB Terminal Blocks			258
Accessories and Tools			1063

233 and 236 Series
Description and Installation

1



Inserting a conductor via 3.5 mm screwdriver.
Screwdriver actuation parallel to conductor entry.

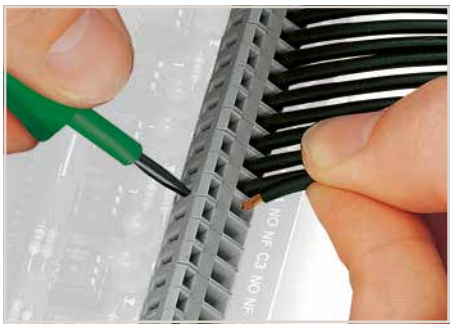

Inserting a conductor via 3.5 mm screwdriver.
Screwdriver actuation perpendicular to conductor entry.

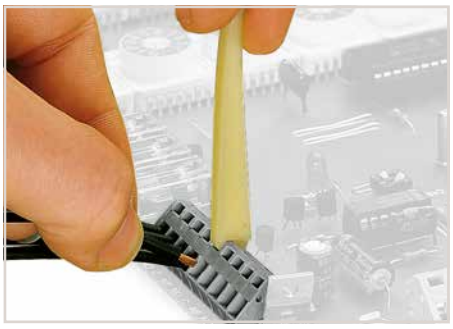

Inserting a conductor via operating tool.



Inserting a conductor via 233-332 Operating Tool. Operation is performed parallel to conductor entry.



PCB Terminal Strips placed behind each other save space – staggering them by half the pin spacing simplifies subsequent wiring of the first row.



Combining PCB terminal blocks with different pin spacing.



Labeling with self-adhesive marking strips.

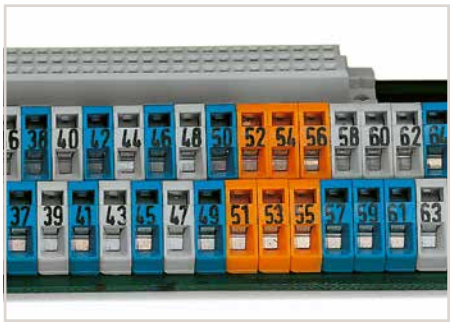

Labeling via factory direct marking.

PCB terminal block ▸ 233 Series

CAGE CLAMP® ▸ Actuation type: Operating tool ▸ 0.5 mm²

1



- Compact terminal strips with CAGE CLAMP® connection and screwdriver actuation parallel or perpendicular to conductor entry
- Double solder pins for high mechanical stability
- Custom color combinations

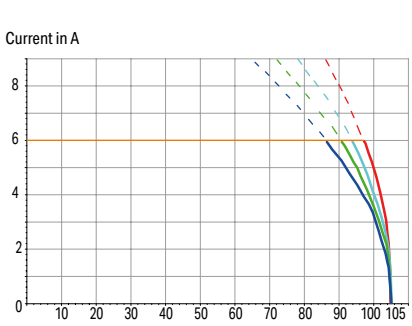

Electrical data			
Pin spacing	**2.5 mm / 0.098 inches; 2.54 mm / 0.1 inches**		
Ratings per	**IEC/EN 60664-1**		
Overvoltage category	III	III	II
Pollution degree	3	2	2
Nominal voltage	63 V	160 V	320 V
Rated impulse withstand voltage	2.5 kV	2.5 kV	2.5 kV
Rated current	6 A	6 A	6 A
Approvals per	**UL 1059**		
Use group	B	C	D
Rated voltage	150 V	-	-
Rated current	4 A	-	-
Approvals per	**CSA**		
Use group	B	C	D
Rated voltage	150 V	-	-
Rated current	4 A	-	-

Connection Data	
Connection technology	CAGE CLAMP®
Strip length	5 … 6 mm / 0.2 … 0.24 inches
Conductor connection direction to PCB	30 °
Solid conductor	0.08 … 0.5 mm² / 28 … 20 AWG
Fine-stranded conductor	0.08 … 0.5 mm² / 28 … 20 AWG
Fine-stranded conductor; with insulated ferrule	0.25 mm²
Fine-stranded conductor; with uninsulated ferrule	0.25 mm²
Note (conductor cross-section)	Terminating 0.75 mm²/18 AWG conductors is possible; however insulation diameter allows only every other clamping unit to be terminated with this conductor size.
Material data	
Material group	I
Insulation material (main housing)	Polyamide (PA66)
Flammability class per UL94	V0
Clamping spring material	Chrome-nickel spring steel (CrNi)
Contact material	Electrolytic copper (E_{Cu})
Contact Plating	Tin
Mechanical data	
Solder pin arrangement	over the entire terminal strip (in-line)
Number of solder pins per potential	2
Solder pin length	4 mm
Solder pin dimensions	0.5 x 0.75 mm
Drilled hole diameter	1.1 $^{(+0.1)}$ mm
Environmental requirements	
Limit temperature range	-60 … +105 °C

Ferrule	Page 1081
Marking	Page 1066
Tool	Page 1072

See technical section for further information

Approvals and corresponding ratings, visit www.wago.com

PCB terminal block ▸ 233 Series

CAGE CLAMP® ▸ Actuation type: Operating tool ▸ 0.5 mm²

Pin spacing: 2.5 mm / 0.098 inches ▸ Color: gray



233-116

Pole number	Item No.	PU (SPU)
2	233-102	600 (100)
3	233-103	500 (125)
4	233-104	400 (100)
5	233-105	340 (85)
6	233-106	280 (70)
7	233-107	240 (60)
8	233-108	220 (55)
9	233-109	200 (50)
10	233-110	180 (45)
12	233-112	140 (35)

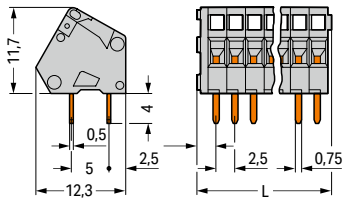

L = (pole no. x pin spacing) + 2.3 mm

Pin spacing: 2.54 mm / 0.1 inches ▸ Color: orange



233-416

Pole number	Item No.	PU (SPU)
2	233-402	600 (100)
3	233-403	500 (125)
4	233-404	400 (100)
5	233-405	340 (85)
6	233-406	280 (70)
7	233-407	240 (60)
8	233-408	220 (55)
9	233-409	200 (50)
10	233-410	180 (45)
12	233-412	140 (35)

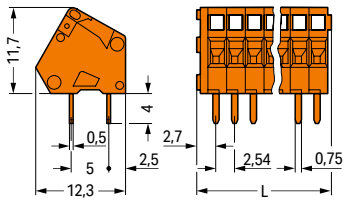

L = (pole no. x pin spacing) + 2.3 mm

PU = packaging unit; SPU = subpackaging unit; Dimensions in mm

Variants:

- Other pole numbers
- Other colors
- Mixed-color PCB connector strips
- Direct marking
- Other versions (or variants) can be requested from WAGO Sales or configured at https://configurator.wago.com/.

Stackable PCB terminal block ▸ 236 Series

CAGE CLAMP® ▸ Actuation type: Operating tool ▸ 2.5 mm² ▸ Pin spacing: 5/5.08 mm / 0.197/0.2 inches

1



- Modular PCB terminal blocks with CAGE CLAMP® connection, screwdriver actuation parallel or perpendicular to conductor entry
- Versions with Ex approval
- For custom PCB terminal strip assemblies
- Operating tools for factory wiring
- 45° conductor entry angle permits a wide range of applications and wiring options
- Set to metric or inch pin spacing by compressing PCB terminal strips or pulling them apart

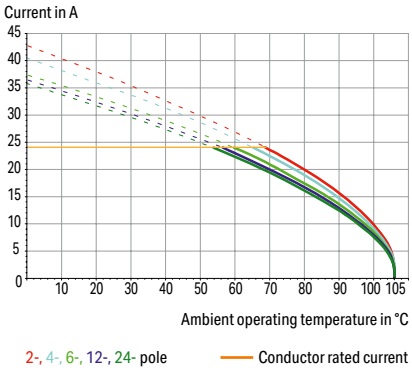

Electrical data			
Pin spacing	**5/5.08 mm / 0.197/0.2 inches**		
Ratings per	**IEC/EN 60664-1**		
Overvoltage category	III	III	II
Pollution degree	3	2	2
Nominal voltage	250 V	320 V	630 V
Rated impulse withstand voltage	4 kV	4 kV	4 kV
Rated current	24 A	24 A	24 A
Approvals per	**UL 1059**		
Use group	B	C	D
Rated voltage	300 V	-	300 V
Rated current	15 A	-	10 A
Approvals per	**CSA**		
Use group	B	C	D
Rated voltage	300 V	-	300 V
Rated current	15 A	-	10 A

Connection Data	
Connection technology	CAGE CLAMP®
Strip length	5 … 6 mm / 0.2 … 0.24 inches
Conductor connection direction to PCB	45 °
Solid conductor	0.08 … 2.5 mm² / 28 … 12 AWG
Fine-stranded conductor	0.08 … 2.5 mm² / 28 … 12 AWG
Fine-stranded conductor; with insulated ferrule	0.25 … 1.5 mm²
Fine-stranded conductor; with uninsulated ferrule	0.25 … 1.5 mm²
Note (conductor cross-section)	12 AWG: THHN, THWN

Material data	
Material group	I
Insulation material (main housing)	Polyamide (PA66)
Flammability class per UL94	V0
Clamping spring material	Chrome-nickel spring steel (CrNi)
Contact material	Electrolytic copper (E_{Cu})
Contact Plating	Tin

Mechanical data	
Solder pin length	4 mm
Solder pin dimensions	0.7 x 0.7 mm
Drilled hole diameter	1.1 $^{(+0.1)}$ mm

Environmental requirements	
Limit temperature range	-60 … +105 °C

Ferrule	Page 1081
Marking	Page 1067
Stickers with operating instructions	Page 1069
Test and measurement	Page 265
Tool	Page 1072
See technical section for further information	
Approvals and corresponding ratings, visit www.wago.com	

Stackable PCB terminal block ▸ 236 Series

CAGE CLAMP® ▸ Actuation type: Operating tool ▸ 2.5 mm² ▸ Pin spacing: 5/5.08 mm / 0.197/0.2 inches

Number of solder pins per potential: 1



236-101

Color	Item No.	PU (SPU)
gray	**236-101**	600 (100)
blue	**236-714**	600 (100)
orange	**236-716**	600 (100)
black	**236-854**	600 (100)
yellow	**236-711**	600 (100)
light gray	**236-713**	600 (100)
green	**236-715**	600 (100)
light green	**236-717**	600 (100)
violet	**236-894**	600 (100)
brown	**236-884**	600 (100)
red	**236-710**	600 (100)
dark gray	**236-712**	600 (100)

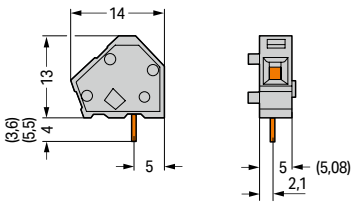

Number of solder pins per potential: 2



236-401

Color	Item No.	PU (SPU)
gray	**236-401**	600 (100)
pink	**236-1731**	600 (100)
blue	**236-744**	600 (100)
orange	**236-746**	600 (100)
black	**236-851**	600 (100)
yellow	**236-741**	600 (100)
light gray	**236-743**	600 (100)
green	**236-745**	600 (100)
light green	**236-747**	600 (100)
violet	**236-891**	600 (100)
brown	**236-881**	600 (100)
red	**236-740**	600 (100)
dark gray	**236-742**	600 (100)

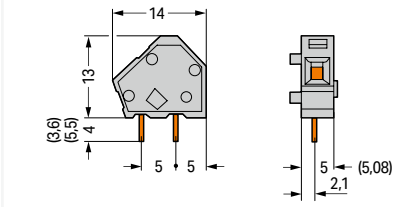

Accessories; for all products on this page



End plate; Width: 1 mm; snap-on type

Color	Item No.	PU (SPU)
gray	**236-100**	2000 (100)
blue	**236-400**	2000 (100)
orange	**236-600**	2000 (100)
black	**236-850**	2000 (100)
light gray	**236-300**	2000 (100)
green	**236-500**	2000 (100)
light green	**236-700**	2000 (100)
red	**236-800**	2000 (100)
dark gray	**236-200**	2000 (100)

PU = packaging unit; SPU = subpackaging unit; Dimensions in mm

Variants:

- Versions for Ex e II and Ex i
- Solder pin length: 3.6 mm
- Solder pin length: 5.5 mm
- Other versions (or variants) can be requested from WAGO Sales or configured at https://configurator.wago.com/.

Stackable PCB terminal block ▸ 236 Series

CAGE CLAMP® ▸ Actuation type: Operating tool ▸ 2.5 mm² ▸ Pin spacing: 7.5/7.62 mm / 0.295/0.3 inches

1



- Modular PCB terminal blocks with CAGE CLAMP® connection, screwdriver actuation parallel or perpendicular to conductor entry
- Versions with Ex approval
- For custom PCB terminal strip assemblies
- Operating tools for factory wiring
- 45° conductor entry angle permits a wide range of applications and wiring options
- Set to metric or inch pin spacing by compressing PCB terminal strips or pulling them apart

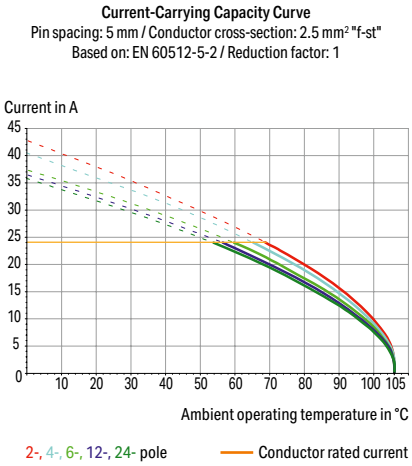

Electrical data			
Pin spacing	**7.5/7.62 mm / 0.295/0.3 inches**		
Ratings per	**IEC/EN 60664-1**		
Overvoltage category	III	III	II
Pollution degree	3	2	2
Nominal voltage	400 V	630 V	1000 V
Rated impulse withstand voltage	6 kV	6 kV	6 kV
Rated current	24 A	24 A	24 A
Approvals per	**UL 1059**		
Use group	B	C	D
Rated voltage	300 V	-	300 V
Rated current	15 A	-	10 A
Approvals per	**CSA**		
Use group	B	C	D
Rated voltage	300 V	-	300 V
Rated current	15 A	-	10 A

Connection Data	
Connection technology	CAGE CLAMP®
Strip length	5 … 6 mm / 0.2 … 0.24 inches
Conductor connection direction to PCB	45 °
Solid conductor	0.08 … 2.5 mm² / 28 … 12 AWG
Fine-stranded conductor	0.08 … 2.5 mm² / 28 … 12 AWG
Fine-stranded conductor; with insulated ferrule	0.25 … 1.5 mm²
Fine-stranded conductor; with uninsulated ferrule	0.25 … 1.5 mm²
Note (conductor cross-section)	12 AWG: THHN, THWN

Material data	
Material group	I
Insulation material (main housing)	Polyamide (PA66)
Flammability class per UL94	V0
Clamping spring material	Chrome-nickel spring steel (CrNi)
Contact material	Electrolytic copper (E_{Cu})
Contact Plating	Tin

Mechanical data	
Solder pin length	4 mm
Solder pin dimensions	0.7 x 0.7 mm
Drilled hole diameter	1.1 $^{(+0.1)}$ mm

Environmental requirements	
Limit temperature range	-60 … +105 °C

Ferrule	Page 1081
Marking	Page 1067
Stickers with operating instructions	Page 1069
Test and measurement	Page 265
Tool	Page 1072
See technical section for further information	
Approvals and corresponding ratings, visit www.wago.com	

Stackable PCB terminal block ▸ 236 Series

CAGE CLAMP® ▸ Actuation type: Operating tool ▸ 2.5 mm² ▸ Pin spacing: 7.5/7.62 mm / 0.295/0.3 inches

Number of solder pins per potential: 1



236-201

Color	Item No.	PU (SPU)
gray	236-201	400 (100)
blue	236-724	400 (100)
orange	236-726	400 (100)
black	236-855	400 (100)
light gray	236-723	400 (100)
green	236-725	400 (100)
light green	236-727	400 (100)
brown	236-885	400 (100)
dark gray	236-722	400 (100)

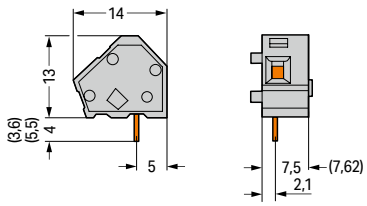

Number of solder pins per potential: 2



236-501

Color	Item No.	PU (SPU)
gray	236-501	400 (100)
blue	236-754	400 (100)
orange	236-756	400 (100)
black	236-852	400 (100)
light gray	236-753	400 (100)
green	236-755	400 (100)
light green	236-757	400 (100)
brown	236-882	400 (100)
dark gray	236-752	400 (100)

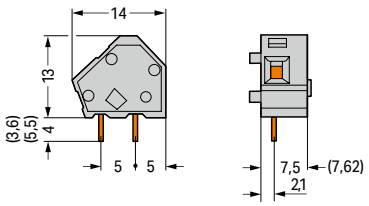

Accessories; for all products on this page



End plate; Width: 1 mm; snap-on type

Color	Item No.	PU (SPU)
gray	236-100	2000 (100)
blue	236-400	2000 (100)
orange	236-600	2000 (100)
black	236-850	2000 (100)
light gray	236-300	2000 (100)
green	236-500	2000 (100)
light green	236-700	2000 (100)
red	236-800	2000 (100)
dark gray	236-200	2000 (100)

PU = packaging unit; SPU = subpackaging unit; Dimensions in mm

Variants:

- Versions for Ex e II and Ex i
- Solder pin length: 3.6 mm
- Solder pin length: 5.5 mm
- Other versions (or variants) can be requested from WAGO Sales or configured at https://configurator.wago.com/.

Stackable PCB terminal block ▸ 236 Series

CAGE CLAMP® ▸ Actuation type: Operating tool ▸ 2.5 mm² ▸ Pin spacing: 10/10.16 mm / 0.394/0.4 inches

1



- Modular PCB terminal blocks with CAGE CLAMP® connection, screwdriver actuation parallel or perpendicular to conductor entry
- Versions with Ex approval
- For custom PCB terminal strip assemblies
- Operating tools for factory wiring
- 45° conductor entry angle permits a wide range of applications and wiring options
- Set to metric or inch pin spacing by compressing PCB terminal strips or pulling them apart

Current-Carrying Capacity Curve
Pin spacing: 5 mm / Conductor cross-section: 2.5 mm² "f-st"
Based on: EN 60512-5-2 / Reduction factor: 1

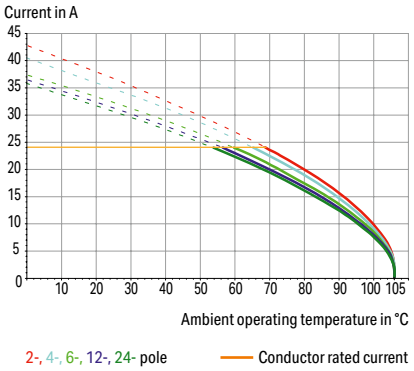

Electrical data			
Pin spacing	**10/10.16 mm / 0.394/0.4 inches**		
Ratings per	**IEC/EN 60664-1**		
Overvoltage category	III	III	II
Pollution degree	3	2	2
Nominal voltage	630 V	1000 V	1000 V
Rated impulse withstand voltage	8 kV	8 kV	8 kV
Rated current	24 A	24 A	24 A
Approvals per	**UL 1059**		
Use group	B	C	D
Rated voltage	300 V	-	300 V
Rated current	15 A	-	10 A
Approvals per	**CSA**		
Use group	B	C	D
Rated voltage	300 V	-	300 V
Rated current	15 A	-	10 A

Connection Data	
Connection technology	CAGE CLAMP®
Strip length	5 … 6 mm / 0.2 … 0.24 inches
Conductor connection direction to PCB	45 °
Solid conductor	0.08 … 2.5 mm² / 28 … 12 AWG
Fine-stranded conductor	0.08 … 2.5 mm² / 28 … 12 AWG
Fine-stranded conductor; with insulated ferrule	0.25 … 1.5 mm²
Fine-stranded conductor; with uninsulated ferrule	0.25 … 1.5 mm²
Note (conductor cross-section)	12 AWG: THHN, THWN

Material data	
Material group	I
Insulation material (main housing)	Polyamide (PA66)
Flammability class per UL94	V0
Clamping spring material	Chrome-nickel spring steel (CrNi)
Contact material	Electrolytic copper (E_{Cu})
Contact Plating	Tin

Mechanical data	
Solder pin length	4 mm
Solder pin dimensions	0.7 x 0.7 mm
Drilled hole diameter	1.1 $^{(+0.1)}$ mm

Environmental requirements	
Limit temperature range	-60 … +105 °C

Ferrule	Page 1081
Marking	Page 1068
Stickers with operating instructions	Page 1069
Tool	Page 1072
See technical section for further information	
Approvals and corresponding ratings, visit www.wago.com	

Stackable PCB terminal block ▸ 236 Series

CAGE CLAMP® ▸ Actuation type: Operating tool ▸ 2.5 mm² ▸ Pin spacing: 10/10.16 mm / 0.394/0.4 inches

Number of solder pins per potential: 1



236-301

Color	Item No.	PU (SPU)
gray	236-301	300 (100)
blue	236-734	300 (100)
orange	236-736	300 (100)
black	236-856	300 (100)
light gray	236-733	300 (100)
green	236-735	300 (100)
light green	236-737	300 (100)
dark gray	236-732	300 (100)

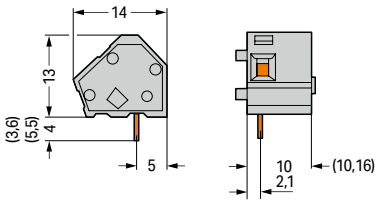

Number of solder pins per potential: 2



236-601

Color	Item No.	PU (SPU)
gray	236-601	300 (100)
blue	236-764	300 (100)
orange	236-766	300 (100)
black	236-853	300 (100)
light gray	236-763	300 (100)
green	236-765	300 (100)
light green	236-767	300 (100)
dark gray	236-762	300 (100)

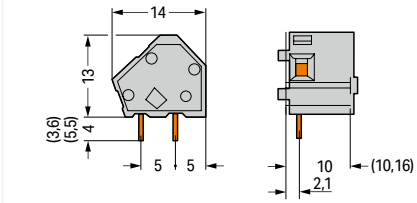

Accessories; for all products on this page



End plate; Width: 1 mm; snap-on type

Color	Item No.	PU (SPU)
gray	236-100	2000 (100)
blue	236-400	2000 (100)
orange	236-600	2000 (100)
black	236-850	2000 (100)
light gray	236-300	2000 (100)
green	236-500	2000 (100)
light green	236-700	2000 (100)
red	236-800	2000 (100)
dark gray	236-200	2000 (100)

PU = packaging unit; SPU = subpackaging unit; Dimensions in mm

Variants:

- Versions for Ex e II and Ex i
- Solder pin length: 3.6 mm
- Solder pin length: 5.5 mm
- Other versions (or variants) can be requested from WAGO Sales or configured at https://configurator.wago.com/.

PCB terminal block ▸ 236 Series

CAGE CLAMP® ▸ Actuation type: Operating tool ▸ 2.5 mm² ▸ Pin spacing: 5/5.08 mm / 0.197/0.2 inches ▸ Color: gray

1

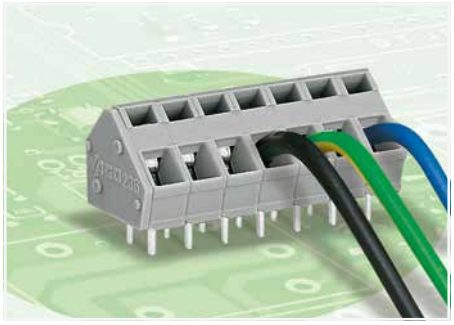

- PCB terminal strips with CAGE CLAMP® connection, screwdriver actuation parallel or perpendicular to conductor entry
- Versions with Ex approval
- Mixed-color PCB terminal strips from factory
- Operating tools for factory wiring
- 45° conductor entry angle permits a wide range of applications and wiring options
- Set to metric or inch pin spacing by compressing PCB terminal strips or pulling them apart

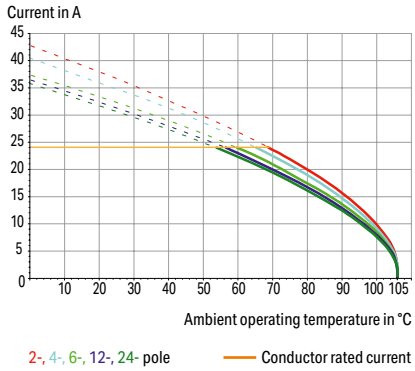

Electrical data			
Pin spacing	**5/5.08 mm / 0.197/0.2 inches**		
Ratings per	**IEC/EN 60664-1**		
Overvoltage category	III	III	II
Pollution degree	3	2	2
Nominal voltage	250 V	320 V	630 V
Rated impulse withstand voltage	4 kV	4 kV	4 kV
Rated current	24 A	24 A	24 A
Approvals per	**UL 1059**		
Use group	B	C	D
Rated voltage	300 V	-	300 V
Rated current	15 A	-	10 A
Approvals per	**CSA**		
Use group	B	C	D
Rated voltage	300 V	-	300 V
Rated current	15 A	-	10 A

Connection Data	
Connection technology	CAGE CLAMP®
Strip length	5 … 6 mm / 0.2 … 0.24 inches
Conductor connection direction to PCB	45 °
Solid conductor	0.08 … 2.5 mm² / 28 … 12 AWG
Fine-stranded conductor	0.08 … 2.5 mm² / 28 … 12 AWG
Fine-stranded conductor; with insulated ferrule	0.25 … 1.5 mm²
Fine-stranded conductor; with uninsulated ferrule	0.25 … 1.5 mm²
Note (conductor cross-section)	12 AWG: THHN, THWN

Material data	
Material group	I
Insulation material (main housing)	Polyamide (PA66)
Flammability class per UL94	V0
Clamping spring material	Chrome-nickel spring steel (CrNi)
Contact material	Electrolytic copper (E_{Cu})
Contact Plating	Tin

Mechanical data	
Solder pin arrangement	over the entire terminal strip (in-line)
Solder pin length	4 mm
Solder pin dimensions	0.7 x 0.7 mm
Drilled hole diameter	1.1 $^{(+0.1)}$ mm

Environmental requirements	
Limit temperature range	-60 … +105 °C

Ferrule	Page 1081
Marking	Page 1067
Stickers with operating instructions	Page 1069
Test and measurement	Page 265
Tool	Page 1072
Custom commoning	Page 272
See technical section for further information	
Approvals and corresponding ratings, visit www.wago.com	

PCB terminal block ▸ 236 Series

CAGE CLAMP® ▸ Actuation type: Operating tool ▸ 2.5 mm² ▸ Pin spacing: 5/5.08 mm / 0.197/0.2 inches ▸ Color: gray

Number of solder pins per potential: 1



236-110

Pole number	Item No.	PU (SPU)
2	**236-102**	420 (105)
3	**236-103**	280 (70)
4	**236-104**	220 (55)
6	**236-106**	140 (35)
8	**236-108**	100 (25)
12	**236-112**	80 (20)
16	**236-116**	60 (15)
24	**236-124**	40 (10)
36	**236-136**	20 (5)
48	**236-148**	20 (5)

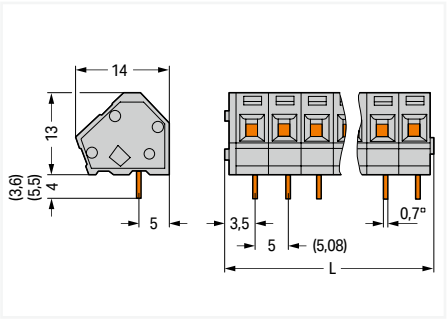

L = (pole no. x pin spacing) + 2.3 mm

Number of solder pins per potential: 2



236-410

Pole number	Item No.	PU (SPU)
2	**236-402**	420 (105)
3	**236-403**	280 (70)
4	**236-404**	220 (55)
6	**236-406**	140 (35)
8	**236-408**	100 (25)
12	**236-412**	80 (20)
16	**236-416**	60 (15)
24	**236-424**	40 (10)
36	**236-436**	20 (5)
48	**236-448**	20 (5)

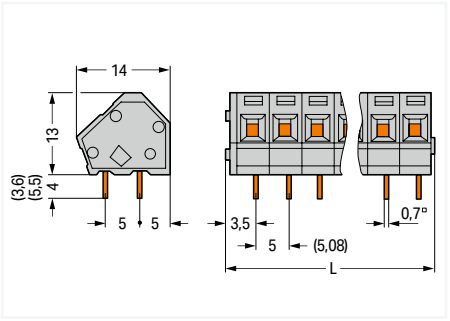

L = (pole no. x pin spacing) + 2.3 mm

PU = packaging unit; SPU = subpackaging unit; Dimensions in mm

Variants:
- Other pole numbers
- Versions for Ex e II and Ex i
- Other colors
- Mixed-color PCB connector strips
- Direct marking
- Solder pin length: 3.6 mm
- Solder pin length: 5.5 mm
- Other versions (or variants) can be requested from WAGO Sales or configured at https://configurator.wago.com/.

PCB terminal block ▸ 236 Series

CAGE CLAMP® ▸ Actuation type: Operating tool ▸ 2.5 mm² ▸ Pin spacing: 7.5/7.62 mm / 0.295/0.3 inches ▸ Color: gray

1

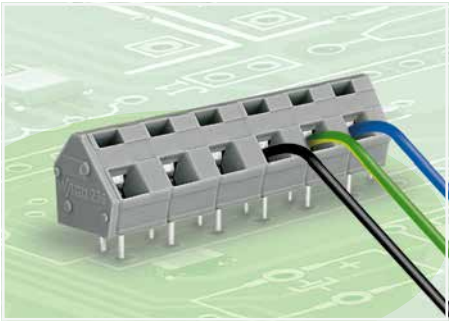

- PCB terminal strips with CAGE CLAMP® connection, screwdriver actuation parallel or perpendicular to conductor entry
- Versions with Ex approval
- Mixed-color PCB terminal strips from factory
- Operating tools for factory wiring
- 45° conductor entry angle permits a wide range of applications and wiring options
- Set to metric or inch pin spacing by compressing PCB terminal strips or pulling them apart

Current-Carrying Capacity Curve
Pin spacing: 5 mm / Conductor cross-section: 2.5 mm² "f-st"
Based on: EN 60512-5-2 / Reduction factor: 1

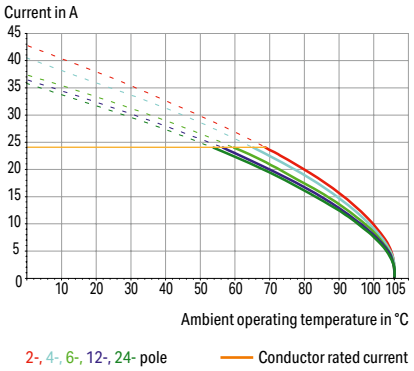

Electrical data			
Pin spacing	**7.5/7.62 mm / 0.295/0.3 inches**		
Ratings per	**IEC/EN 60664-1**		
Overvoltage category	III	III	II
Pollution degree	3	2	2
Nominal voltage	400 V	630 V	1000 V
Rated impulse withstand voltage	6 kV	6 kV	6 kV
Rated current	24 A	24 A	24 A
Approvals per	**UL 1059**		
Use group	B	C	D
Rated voltage	-	-	300 V
Rated current	-	-	10 A
Approvals per	**CSA**		
Use group	B	C	D
Rated voltage	300 V	-	300 V
Rated current	15 A	-	10 A

Connection Data	
Connection technology	CAGE CLAMP®
Strip length	5 … 6 mm / 0.2 … 0.24 inches
Conductor connection direction to PCB	45 °
Solid conductor	0.08 … 2.5 mm² / 28 … 12 AWG
Fine-stranded conductor	0.08 … 2.5 mm² / 28 … 12 AWG
Fine-stranded conductor; with insulated ferrule	0.25 … 1.5 mm²
Fine-stranded conductor; with uninsulated ferrule	0.25 … 1.5 mm²
Note (conductor cross-section)	12 AWG: THHN, THWN

Material data	
Material group	I
Insulation material (main housing)	Polyamide (PA66)
Flammability class per UL94	V0
Clamping spring material	Chrome-nickel spring steel (CrNi)
Contact material	Electrolytic copper (E_{Cu})
Contact Plating	Tin

Mechanical data	
Solder pin arrangement	over the entire terminal strip (in-line)
Solder pin length	4 mm
Solder pin dimensions	0.7 x 0.7 mm
Drilled hole diameter	1.1 $^{(+0.1)}$ mm

Environmental requirements	
Limit temperature range	-60 … +105 °C

Ferrule	Page 1081
Marking	Page 1067
Stickers with operating instructions	Page 1069
Test and measurement	Page 265
Tool	Page 1072
Custom commoning	Page 272
See technical section for further information	
Approvals and corresponding ratings, visit www.wago.com	

PCB terminal block ▸ 236 Series

CAGE CLAMP® ▸ Actuation type: Operating tool ▸ 2.5 mm² ▸ Pin spacing: 7.5/7.62 mm / 0.295/0.3 inches ▸ Color: gray

1

Number of solder pins per potential: 1

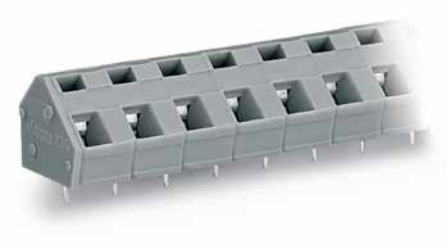

236-207

Pole number	Item No.	PU (SPU)
2	236-202	280 (70)
3	236-203	200 (50)
4	236-204	140 (35)
6	236-206	100 (25)
8	236-208	80 (20)
12	236-212	40 (10)
16	236-216	40 (10)
24	236-224	20 (5)

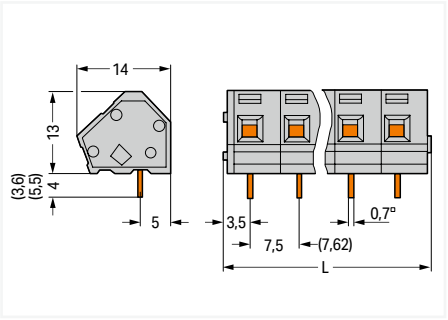

L = (pole no. x pin spacing) + 2.3 mm

Number of solder pins per potential: 2

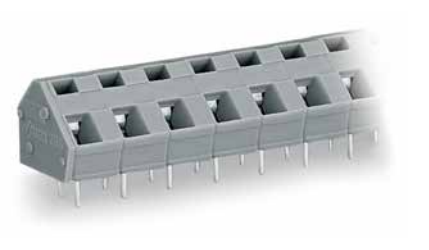

236-507

Pole number	Item No.	PU (SPU)
2	236-502	280 (70)
3	236-503	200 (50)
4	236-504	140 (35)
6	236-506	100 (25)
8	236-508	80 (20)
12	236-512	40 (10)
16	236-516	40 (10)
24	236-524	20 (5)

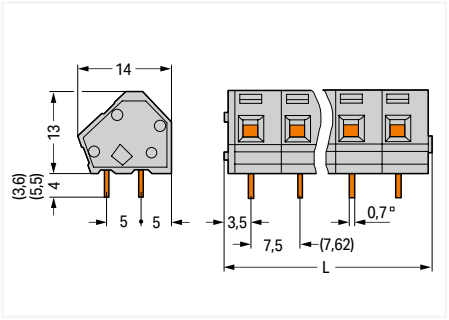

L = (pole no. x pin spacing) + 2.3 mm

PU = packaging unit; SPU = subpackaging unit; Dimensions in mm

Variants:
- Other pole numbers
- Versions for Ex e II and Ex i
- Other colors
- Mixed-color PCB connector strips
- Direct marking
- Solder pin length: 3.6 mm
- Solder pin length: 5.5 mm
- Other versions (or variants) can be requested from WAGO Sales or configured at https://configurator.wago.com/.

PCB terminal block ▸ 236 Series

CAGE CLAMP® ▸ Actuation type: Operating tool ▸ 2.5 mm² ▸ Pin spacing: 10/10.16 mm / 0.394/0.4 inches ▸ Color: gray

1



- PCB terminal strips with CAGE CLAMP® connection, screwdriver actuation parallel or perpendicular to conductor entry
- Versions with Ex approval
- Mixed-color PCB terminal strips from factory
- Operating tools for factory wiring
- 45° conductor entry angle permits a wide range of applications and wiring options
- Set to metric or inch pin spacing by compressing PCB terminal strips or pulling them apart

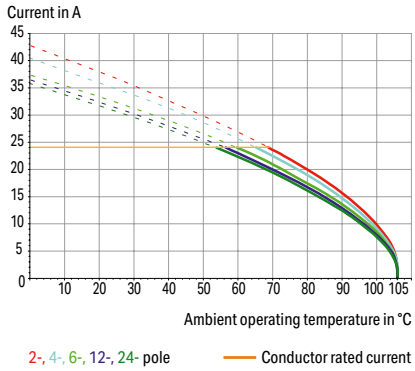

Electrical data			
Pin spacing	**10/10.16 mm / 0.394/0.4 inches**		
Ratings per	**IEC/EN 60664-1**		
Overvoltage category	III	III	II
Pollution degree	3	2	2
Nominal voltage	630 V	1000 V	1000 V
Rated impulse withstand voltage	8 kV	8 kV	8 kV
Rated current	24 A	24 A	24 A
Approvals per	**UL 1059**		
Use group	B	C	D
Rated voltage	300 V	-	300 V
Rated current	15 A	-	10 A
Approvals per	**CSA**		
Use group	B	C	D
Rated voltage	300 V	-	300 V
Rated current	15 A	-	10 A

Connection Data	
Connection technology	CAGE CLAMP®
Strip length	5 … 6 mm / 0.2 … 0.24 inches
Conductor connection direction to PCB	45 °
Solid conductor	0.08 … 2.5 mm² / 28 … 12 AWG
Fine-stranded conductor	0.08 … 2.5 mm² / 28 … 12 AWG
Fine-stranded conductor; with insulated ferrule	0.25 … 1.5 mm²
Fine-stranded conductor; with uninsulated ferrule	0.25 … 1.5 mm²
Note (conductor cross-section)	12 AWG: THHN, THWN

Material data	
Material group	I
Insulation material (main housing)	Polyamide (PA66)
Flammability class per UL94	V0
Clamping spring material	Chrome-nickel spring steel (CrNi)
Contact material	Electrolytic copper (E_{Cu})
Contact Plating	Tin

Mechanical data	
Solder pin arrangement	over the entire terminal strip (in-line)
Solder pin length	4 mm
Solder pin dimensions	0.7 x 0.7 mm
Drilled hole diameter	1.1 $^{(+0.1)}$ mm

Environmental requirements	
Limit temperature range	-60 … +105 °C

Ferrule	Page 1081
Marking	Page 1068
Stickers with operating instructions	Page 1069
Tool	Page 1072
Custom commoning	Page 272
See technical section for further information	
Approvals and corresponding ratings, visit www.wago.com	

PCB terminal block ▸ 236 Series

CAGE CLAMP® ▸ Actuation type: Operating tool ▸ 2.5 mm² ▸ Pin spacing: 10/10.16 mm / 0.394/0.4 inches ▸ Color: gray

Number of solder pins per potential: 1



236-305

Pole number	Item No.	PU (SPU)
2	236-302	200 (50)
3	236-303	140 (35)
4	236-304	100 (25)
6	236-306	80 (20)
8	236-308	60 (15)
12	236-312	40 (10)
16	236-316	20 (5)
24	236-324	20 (5)

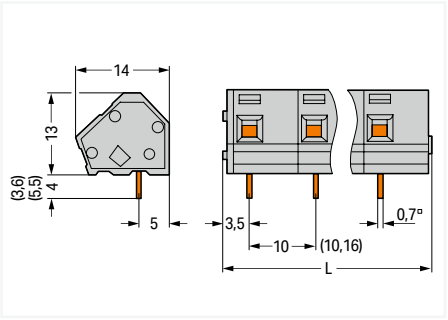

L = (pole no. x pin spacing) + 2.3 mm

Number of solder pins per potential: 2



236-605

Pole number	Item No.	PU (SPU)
2	236-602	200 (50)
3	236-603	140 (35)
4	236-604	100 (25)
6	236-606	80 (20)
8	236-608	60 (15)
12	236-612	40 (10)
16	236-616	20 (5)
24	236-624	20 (5)

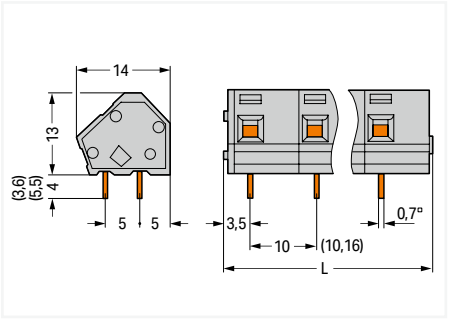

L = (pole no. x pin spacing) + 2.3 mm

PU = packaging unit; SPU = subpackaging unit; Dimensions in mm

Variants:

- Other pole numbers
- Versions for Ex e II and Ex i
- Other colors
- Mixed-color PCB connector strips
- Direct marking
- Solder pin length: 3.6 mm
- Solder pin length: 5.5 mm
- Other versions (or variants) can be requested from WAGO Sales or configured at https://configurator.wago.com/.

CAGE CLAMP®

745 Series
Description and Installation

1

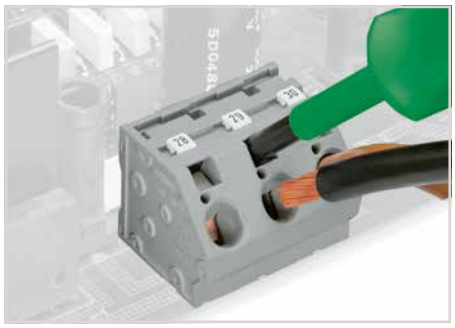

Inserting/removing a conductor via 5.5 mm screwdriver – 745 Series, 16 mm².

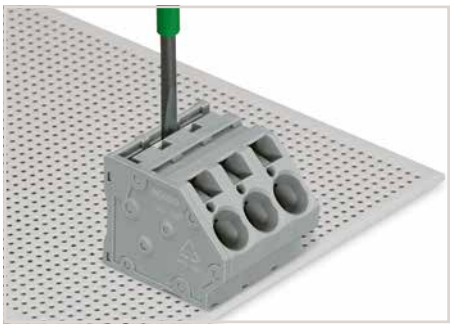

To insert a comb-style jumper bar, push it down using a screwdriver until it hits the backstop – 745 Series.

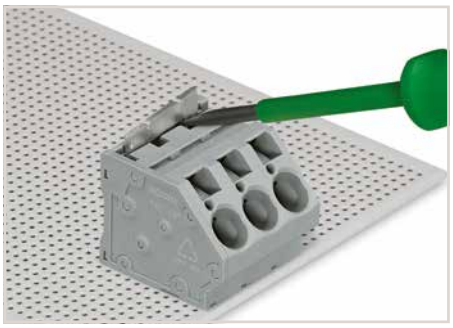

To remove the comb-style jumper bar, lift it up using a screwdriver – 745 Series.

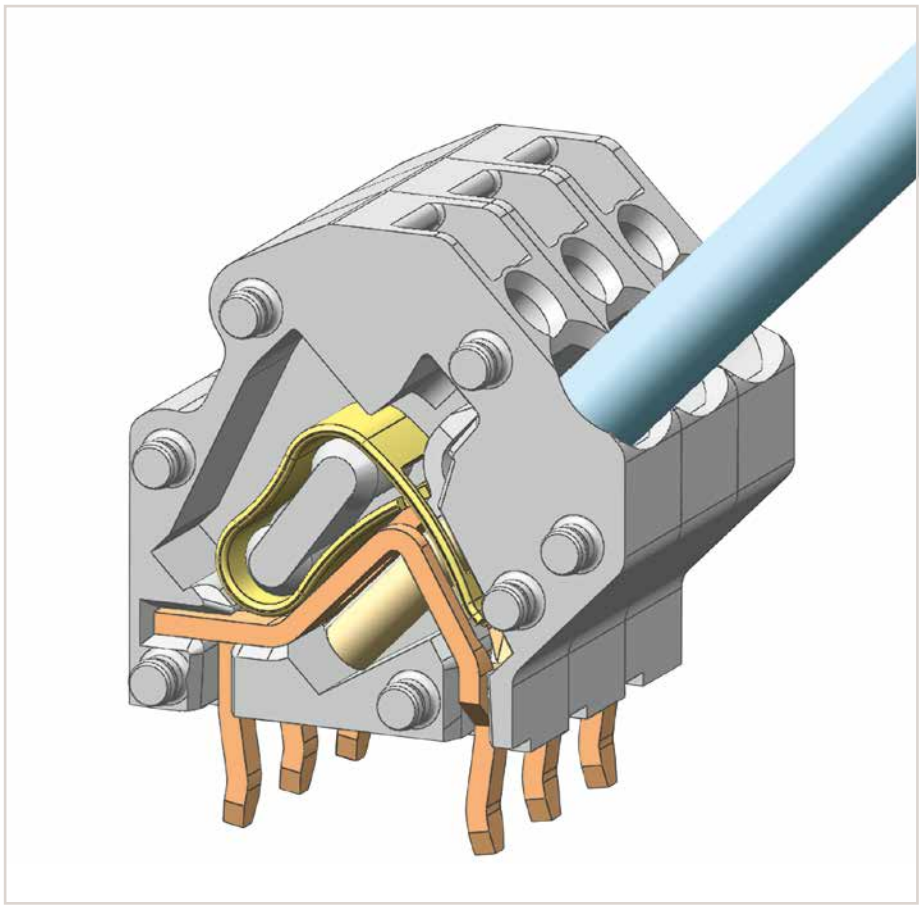

745 Series

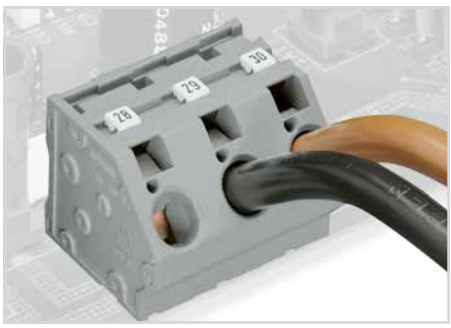

Marking via miniature WSB and WMB markers or factory direct marking – 745 Series.

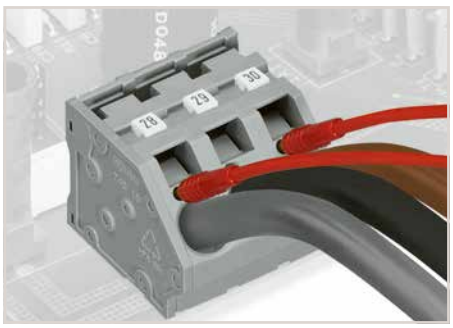

Testing with test plug – 745 Series.

Stackable PCB terminal block ▸ 745 Series

CAGE CLAMP® ▸ Actuation type: Operating tool ▸ 4 mm² ▸ Pin spacing: 5 mm / 0.197 inches

1

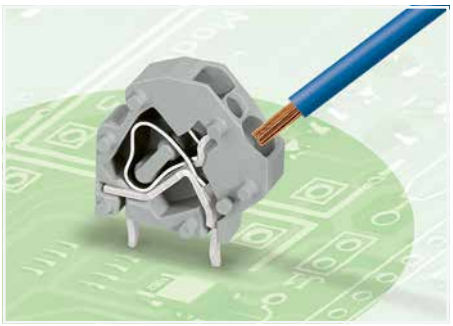

- Modular PCB terminal blocks with screwdriver-actuated CAGE CLAMP® for custom PCB terminal strip assemblies
- Versions with Ex approval
- Spacers for higher voltage applications
- Double solder pins for high mechanical stability
- Space-efficient configuration of terminal strips placed behind each other
- Integrated testing tap

Current-Carrying Capacity Curve
Pin spacing: 5 mm / Conductor cross-section: 4 mm² "f-st"
Based on: EN 60512-5-2 / Reduction factor: 1

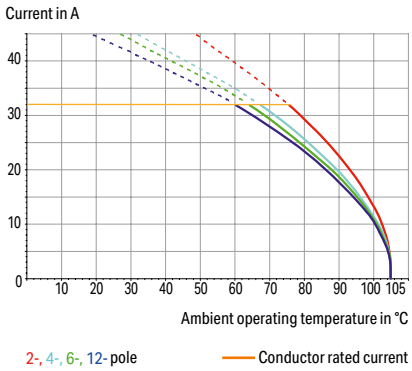

Electrical data			
Pin spacing	**5 mm / 0.197 inches**		
Ratings per	**IEC/EN 60664-1**		
Overvoltage category	III	III	II
Pollution degree	3	2	2
Nominal voltage	320 V	320 V	630 V
Rated impulse withstand voltage	4 kV	4 kV	4 kV
Rated current	32 A	32 A	32 A
Approvals per	**UL 1059**		
Use group	B	C	D
Rated voltage	300 V	-	300 V
Rated current	20 A	-	10 A
Approvals per	**CSA**		
Use group	B	C	D
Rated voltage	300 V	-	300 V
Rated current	20 A	-	10 A

Connection Data	
Connection technology	CAGE CLAMP®
Strip length	8 … 9 mm / 0.31 … 0.35 inches
Conductor connection direction to PCB	45 °
Solid conductor	0.08 … 4 mm² / 28 … 12 AWG
Fine-stranded conductor	0.08 … 4 mm² / 28 … 12 AWG
Fine-stranded conductor; with insulated ferrule	0.25 … 2.5 mm²
Fine-stranded conductor; with uninsulated ferrule	0.25 … 2.5 mm²

Material data	
Material group	I
Insulation material (main housing)	Polyamide (PA66)
Flammability class per UL94	V0
Clamping spring material	Chrome-nickel spring steel (CrNi)
Contact material	Electrolytic copper (E_{Cu})
Contact Plating	Tin

Mechanical data	
Solder pin arrangement	within the terminal block (in-line)
Number of solder pins per potential	2
Solder pin length	4 mm
Solder pin dimensions	0.8 x 1.2 mm
Drilled hole diameter	1.5 $^{(+0.1)}$ mm

Environmental requirements	
Limit temperature range	-60 … +105 °C

Marking	Page 1067
Test and measurement	Page 1088
Tool	Page 1072
See technical section for further information	
Approvals and corresponding ratings, visit www.wago.com	

Stackable PCB terminal block ▸ 745 Series

CAGE CLAMP® ▸ Actuation type: Operating tool ▸ 4 mm² ▸ Pin spacing: 5 mm / 0.197 inches



745-3801

Color	Item No.	PU (SPU)
gray	**745-3801**	200 (50)
blue	**745-3804**	200 (50)
light gray	**745-3803**	200 (50)
light green	**745-3808**	200 (50)

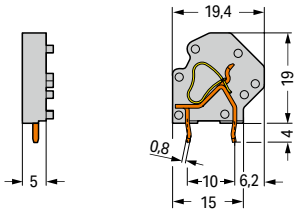

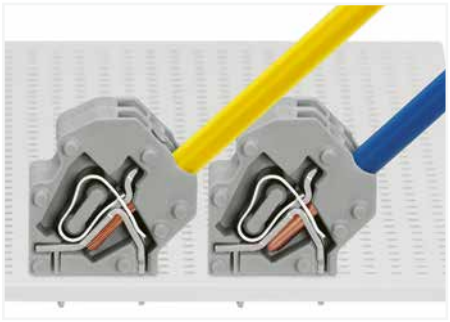

Saving space: two PCB terminal strips arranged in a row

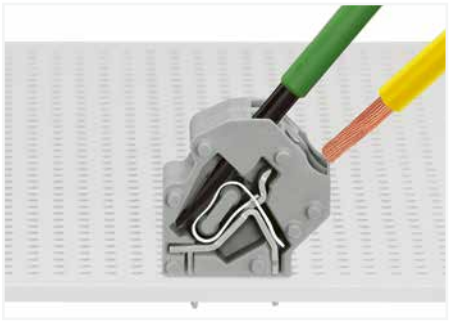

Inserting a conductor via 3.5 mm screwdriver.



Testing with 2 mm Ø test plug.

Accessories; for all products on this page



End plate; Width: 1.5 mm; snap-on type



Intermediate plate; extends pin spacing; Width: 2.5 mm / 0.098 inches

PU = packaging unit; SPU = subpackaging unit; Dimensions in mm

Variants:

- Versions for Ex e II and Ex i
- Other colors
- Other versions (or variants) can be requested from WAGO Sales or configured at https://configurator.wago.com/.

PCB terminal block ▸ 745 Series

CAGE CLAMP® ▸ Actuation type: Operating tool ▸ 4 mm² ▸ Color: gray

1

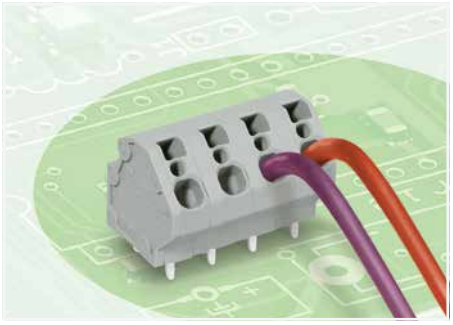

- PCB terminal strips with screwdriver-actuated CAGE CLAMP® connection
- Versions with Ex approval
- Mixed-color PCB terminal strips from factory
- Space-saving configuration of terminal strips when placed behind each other
- Custom color combinations
- Double solder pins for high mechanical stability
- Integrated testing tap

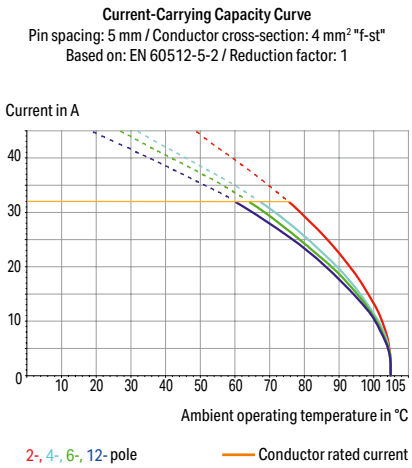

Electrical data									
Pin spacing	**5 mm / 0.197 inches**			**7.5 mm / 0.295 inches**			**10 mm / 0.394 inches**		
Ratings per	**IEC/EN 60664-1**			**IEC/EN 60664-1**			**IEC/EN 60664-1**		
Overvoltage category	III	III	II	III	III	II	III	III	II
Pollution degree	3	2	2	3	2	2	3	2	2
Nominal voltage	320 V	320 V	630 V	500 V	630 V	1000 V	800 V	1000 V	1000 V
Rated impulse withstand voltage	4 kV	4 kV	4 kV	6 kV	6 kV	6 kV	8 kV	8 kV	8 kV
Rated current	32 A	32 A	32 A	32 A	32 A	32 A	32 A	32 A	32 A
Approvals per	**UL 1059**			**UL 1059**			**UL 1059**		
Use group	B	C	D	B	C	D	B	C	D
Rated voltage	300 V	-	300 V	300 V	150 V	300 V	300 V	300 V	600 V
Rated current	20 A	-	10 A	20 A	20 A	10 A	20 A	20 A	5 A
Approvals per	**CSA**			**CSA**			**CSA**		
Use group	B	C	D	B	C	D	B	C	D
Rated voltage	300 V	-	300 V	300 V	150 V	300 V	300 V	300 V	600 V
Rated current	20 A	-	10 A	20 A	20 A	10 A	20 A	20 A	5 A

Electrical data			
Pin spacing	**12.5 mm / 0.492 inches**		
Ratings per	**IEC/EN 60664-1**		
Overvoltage category	III	III	II
Pollution degree	3	2	2
Nominal voltage	1000 V	1000 V	1000 V
Rated impulse withstand voltage	8 kV	8 kV	8 kV
Rated current	32 A	32 A	32 A
Approvals per	**UL 1059**		
Use group	B	C	D
Rated voltage	600 V	600 V	-
Rated current	20 A	20 A	-
Approvals per	**CSA**		
Use group	B	C	D
Rated voltage	600 V	600 V	-
Rated current	20 A	20 A	-

Connection Data	
Connection technology	CAGE CLAMP®
Strip length	8 … 9 mm / 0.31 … 0.35 inches
Conductor connection direction to PCB	45 °
Solid conductor	0.08 … 4 mm² / 28 … 12 AWG
Fine-stranded conductor	0.08 … 4 mm² / 28 … 12 AWG
Fine-stranded conductor; with insulated ferrule	0.25 … 2.5 mm²
Fine-stranded conductor; with uninsulated ferrule	0.25 … 2.5 mm²

Material data	
Material group	I
Insulation material (main housing)	Polyamide (PA66)
Flammability class per UL94	V0
Clamping spring material	Chrome-nickel spring steel (CrNi)
Contact material	Electrolytic copper (E_{Cu})
Contact Plating	Tin

Marking	Page 1067
Test and measurement	Page 1088
Tool	Page 1072
See technical section for further information	
Approvals and corresponding ratings, visit www.wago.com	

PCB terminal block ▸ 745 Series

CAGE CLAMP® ▸ Actuation type: Operating tool ▸ 4 mm² ▸ Color: gray

Mechanical data	
Solder pin arrangement	over the entire terminal strip (in-line)
Number of solder pins per potential	2
Solder pin length	4 mm
Solder pin dimensions	0.8 x 1.2 mm
Drilled hole diameter	1.5 $^{(+0.1)}$ mm
Environmental requirements	
Limit temperature range	-60 … +105 °C

PCB terminal block ▸ 745 Series

CAGE CLAMP® ▸ Actuation type: Operating tool ▸ 4 mm² ▸ Color: gray

1

Pin spacing: 5 mm / 0.197 inches



745-3104

Pole number	Item No.	PU
2	745-3102	276
3	745-3103	192
4	745-3104	144
5	745-3105	120
6	745-3106	96
7	745-3107	84
8	745-3108	72
9	745-3109	60
10	745-3110	60
11	745-3111	48
12	745-3112	48

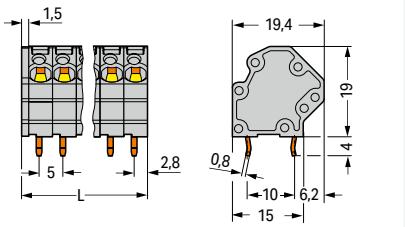

L = (pole no. x pin spacing) + 1.5 mm

Pin spacing: 7.5 mm / 0.295 inches



745-3154

Pole number	Item No.	PU
2	745-3152	228
3	745-3153	132
4	745-3154	108
5	745-3155	84
6	745-3156	72
7	745-3157	60
8	745-3158	48
9	745-3159	48
10	745-3160	36
11	745-3161	30
12	745-3162	30

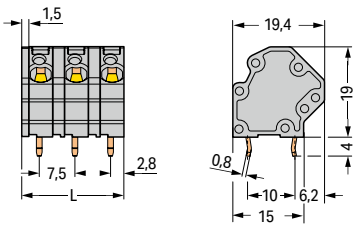

L = (pole no. – 1) x pin spacing + 5 mm + 1.5 mm

Pin spacing: 10 mm / 0.394 inches



745-3204

Pole number	Item No.	PU (SPU)
2	745-3202	192
3	745-3203	120
4	745-3204	84
5	745-3205	60
6	745-3206	48
7	745-3207	48
8	745-3208	36
9	745-3209	36
10	745-3210	24
11	745-3211	12
12	745-3212	24 (12)

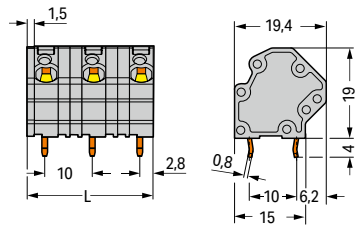

L = (pole no. – 1) x pin spacing + 5 mm + 1.5 mm

PU = packaging unit; SPU = subpackaging unit; Dimensions in mm

Variants:

- Other pole numbers
- Versions for Ex e II and Ex i
- Other colors
- Mixed-color PCB connector strips
- Direct marking
- Other versions (or variants) can be requested from WAGO Sales or configured at https://configurator.wago.com/.

PCB terminal block ▸ 745 Series

CAGE CLAMP® ▸ Actuation type: Operating tool ▸ 4 mm² ▸ Color: gray

Pin spacing: 12.5 mm / 0.492 inches



745-3254

Pole number	Item No.	PU (SPU)
2	**745-3252**	168
3	**745-3253**	96
4	**745-3254**	72
5	**745-3255**	40
6	**745-3256**	36
7	**745-3257**	36
8	**745-3258**	24 (12)
9	**745-3259**	24
10	**745-3260**	24
11	**745-3261**	12
12	**745-3262**	12

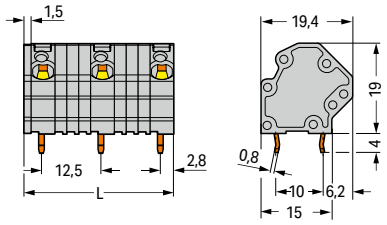

L = (pole no. – 1) x pin spacing + 5 mm + 1.5 mm

PU = packaging unit; SPU = subpackaging unit; Dimensions in mm

Variants:

- Other pole numbers
- Versions for Ex e II and Ex i
- Other colors
- Mixed-color PCB connector strips
- Direct marking
- Other versions (or variants) can be requested from WAGO Sales or configured at https://configurator.wago.com/.

Stackable PCB terminal block ▸ 745 Series

CAGE CLAMP® ▸ Actuation type: Operating tool ▸ 4 mm² ▸ Number of jumper slots: 1

1



- Modular terminal blocks with screwdriver-actuated CAGE CLAMP® for custom terminal strip assemblies
- Versions with Ex approval
- Common and distribute potentials via comb-style jumper bars
- Double solder pins for high mechanical stability
- Integrated testing tap
- Marker slot for Mini-WSB markers

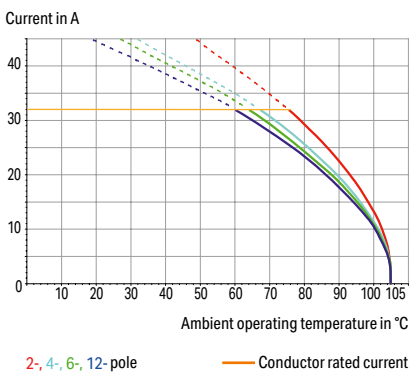

Electrical data									
Pin spacing	**5 mm / 0.197 inches**			**7.5 mm / 0.295 inches**			**10 mm / 0.394 inches**		
Ratings per	**IEC/EN 60664-1**			**IEC/EN 60664-1**			**IEC/EN 60664-1**		
Overvoltage category	III	III	II	III	III	II	III	III	II
Pollution degree	3	2	2	3	2	2	3	2	2
Nominal voltage	320 V	320 V	630 V	500 V	630 V	1000 V	630 V	1000 V	1000 V
Rated impulse withstand voltage	4 kV	4 kV	4 kV	6 kV	6 kV	6 kV	8 kV	8 kV	8 kV
Rated current	32 A	32 A	32 A	32 A	32 A	32 A	32 A	32 A	32 A
Approvals per	**UL 1059**			**UL 1059**			**UL 1059**		
Use group	B	C	D	B	C	D	B	C	D
Rated voltage	300 V	-	300 V	300 V	150 V	300 V	300 V	150 V	300 V
Rated current	20 A	-	10 A	20 A	20 A	10 A	20 A	20 A	10 A
Approvals per	**CSA**			**CSA**			**CSA**		
Use group	B	C	D	B	C	D	B	C	D
Rated voltage	300 V	-	300 V	300 V	150 V	300 V	300 V	150 V	300 V
Rated current	20 A	-	10 A	20 A	20 A	10 A	20 A	20 A	10 A

Connection Data	
Connection technology	CAGE CLAMP®
Strip length	8 … 9 mm / 0.31 … 0.35 inches
Conductor connection direction to PCB	45 °
Solid conductor	0.08 … 4 mm² / 28 … 12 AWG
Fine-stranded conductor	0.08 … 4 mm² / 28 … 12 AWG
Fine-stranded conductor; with insulated ferrule	0.25 … 2.5 mm²
Fine-stranded conductor; with uninsulated ferrule	0.25 … 2.5 mm²

Material data	
Material group	I
Insulation material (main housing)	Polyamide (PA66)
Flammability class per UL94	V0
Clamping spring material	Chrome-nickel spring steel (CrNi)
Contact material	Electrolytic copper (E_{Cu})
Contact Plating	Tin

Mechanical data	
Solder pin arrangement	within the terminal block (in-line)
Number of solder pins per potential	2
Solder pin length	4 mm
Solder pin dimensions	0.8 x 1.2 mm
Drilled hole diameter	1.5 $^{(+0.1)}$ mm

Environmental requirements	
Limit temperature range	-60 … +105 °C

Jumper	Page 258
Marking	Page 1064
Test and measurement	Page 1088
Tool	Page 1072

See technical section for further information

Approvals and corresponding ratings, visit www.wago.com

Stackable PCB terminal block ▸ 745 Series

CAGE CLAMP® ▸ Actuation type: Operating tool ▸ 4 mm² ▸ Number of jumper slots: 1

Pin spacing: 5 mm / 0.197 inches



745-801

Color	Item No.	PU (SPU)
gray	**745-801**	200 (50)
blue	**745-804**	200 (50)
light gray	**745-803**	200 (50)
green-yellow	**745-807**	200 (50)
light green	**745-808**	200 (50)

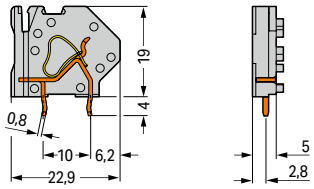

Pin spacing: 7.5 mm / 0.295 inches



745-811

Color	Item No.	PU (SPU)
gray	**745-811**	200 (50)
blue	**745-814**	200
light gray	**745-813**	200 (50)
green-yellow	**745-817**	200 (50)
light green	**745-818**	200 (50)

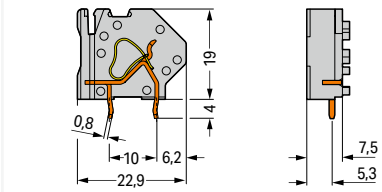

Pin spacing: 10 mm / 0.394 inches



745-821

Color	Item No.	PU (SPU)
gray	**745-821**	200 (50)
blue	**745-824**	200 (50)
light gray	**745-823**	200 (50)
green-yellow	**745-827**	200 (50)
light green	**745-828**	200 (50)

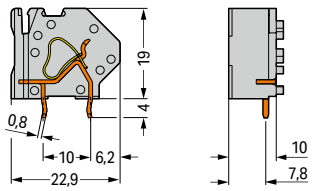

Accessories; for all products on this page



End plate; Width: 1.5 mm; snap-on type



End plate; Width: 7.9 mm; Screw mount



End plate; Width: 7.3 mm; Screw mount

PU = packaging unit; SPU = subpackaging unit; Dimensions in mm

Variants:

- Versions for Ex e II and Ex i
- Other colors
- Other versions (or variants) can be requested from WAGO Sales or configured at https://configurator.wago.com/.

PCB terminal block ▸ 745 Series

CAGE CLAMP® ▸ Actuation type: Operating tool ▸ 4 mm² ▸ Number of jumper slots: 1 ▸ Color: gray

1

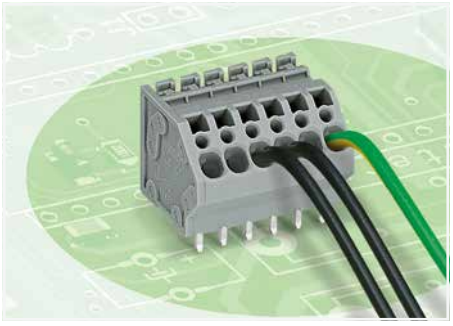

- PCB terminal strips with screwdriver-actuated CAGE CLAMP® connection
- Versions with Ex approval
- Common and distribute potentials via comb-style jumper bars
- Double solder pins for high mechanical stability
- Custom color combinations
- Integrated testing tap
- Marker slot for Mini-WSB markers

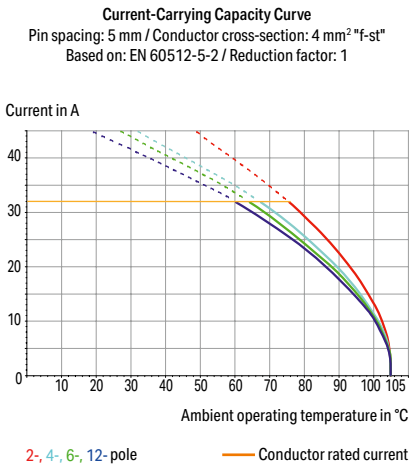

Electrical data									
Pin spacing	**5 mm / 0.197 inches**			**7.5 mm / 0.295 inches**			**10 mm / 0.394 inches**		
Ratings per	**IEC/EN 60664-1**			**IEC/EN 60664-1**			**IEC/EN 60664-1**		
Overvoltage category	III	III	II	III	III	II	III	III	II
Pollution degree	3	2	2	3	2	2	3	2	2
Nominal voltage	320 V	320 V	630 V	500 V	630 V	1000 V	630 V	1000 V	1000 V
Rated impulse withstand voltage	4 kV	4 kV	4 kV	6 kV	6 kV	6 kV	8 kV	8 kV	8 kV
Rated current	32 A	32 A	32 A	32 A	32 A	32 A	32 A	32 A	32 A
Approvals per	**UL 1059**			**UL 1059**			**UL 1059**		
Use group	B	C	D	B	C	D	B	C	D
Rated voltage	300 V	-	300 V	300 V	150 V	300 V	300 V	150 V	300 V
Rated current	20 A	-	10 A	20 A	20 A	10 A	20 A	20 A	10 A
Approvals per	**CSA**			**CSA**			**CSA**		
Use group	B	C	D	B	C	D	B	C	D
Rated voltage	300 V	-	300 V	300 V	150 V	300 V	300 V	150 V	300 V
Rated current	20 A	-	10 A	20 A	20 A	10 A	20 A	20 A	10 A

Connection Data	
Connection technology	CAGE CLAMP®
Strip length	8 … 9 mm / 0.31 … 0.35 inches
Conductor connection direction to PCB	45 °
Solid conductor	0.08 … 4 mm² / 28 … 12 AWG
Fine-stranded conductor	0.08 … 4 mm² / 28 … 12 AWG
Fine-stranded conductor; with insulated ferrule	0.25 … 2.5 mm²
Fine-stranded conductor; with uninsulated ferrule	0.25 … 2.5 mm²

Material data	
Material group	I
Insulation material (main housing)	Polyamide (PA66)
Flammability class per UL94	V0
Clamping spring material	Chrome-nickel spring steel (CrNi)
Contact material	Electrolytic copper (E_{Cu})
Contact Plating	Tin

Mechanical data	
Solder pin arrangement	over the entire terminal strip (in-line)
Number of solder pins per potential	2
Solder pin length	4 mm
Solder pin dimensions	0.8 x 1.2 mm
Drilled hole diameter	1.5 $^{(+0.1)}$ mm

Environmental requirements	
Limit temperature range	-60 … +105 °C

Jumper	Page 258
Marking	Page 1064
Test and measurement	Page 1088
Tool	Page 1072
See technical section for further information	
Approvals and corresponding ratings, visit www.wago.com	

PCB terminal block ▸ 745 Series

CAGE CLAMP® ▸ Actuation type: Operating tool ▸ 4 mm² ▸ Number of jumper slots: 1 ▸ Color: gray

Pin spacing: 5 mm / 0.197 inches



745-112

Pole number	Item No.	PU
2	745-102	230
3	745-103	160
4	745-104	120
5	745-105	100
6	745-106	80
7	745-107	70
8	745-108	60
9	745-109	50
10	745-110	50
12	745-112	40

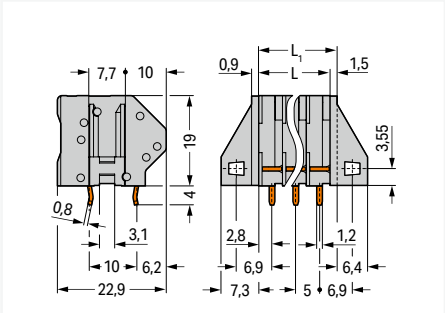

L = (pole no. – 1) x pin spacing + 5 mm
L_1 = L + 1.5 mm ≙ version **without** mounting flange

Pin spacing: 7.5 mm / 0.295 inches

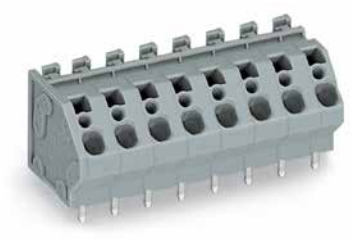

745-158

Pole number	Item No.	PU
2	745-152	180
3	745-153	120
4	745-154	90
5	745-155	70
6	745-156	60
7	745-157	50
8	745-158	40
9	745-159	40
10	745-160	30
12	745-162	30

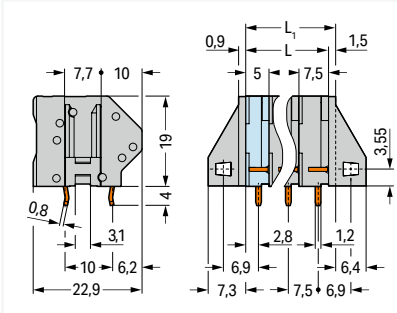

L = (pole no. – 1) x pin spacing + 5 mm
L_1 = L + 1.5 mm ≙ version **without** mounting flange

Pin spacing: 10 mm / 0.394 inches

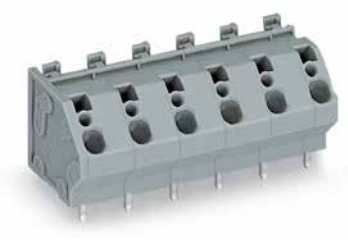

745-206

Pole number	Item No.	PU
2	745-202	160
3	745-203	100
4	745-204	70
5	745-205	50
6	745-206	40
7	745-207	40
8	745-208	30
9	745-209	30
10	745-210	20
12	745-212	20

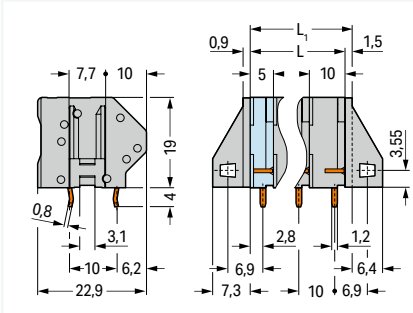

L = (pole no. – 1) x pin spacing + 5 mm
L_1 = L + 1.5 mm ≙ version **without** mounting flange

PU = packaging unit; SPU = subpackaging unit; Dimensions in mm

Variants:

- Other pole numbers
- Versions for Ex e II and Ex i
- Other colors
- Mixed-color PCB connector strips
- Versions with mounting flanges
- Direct marking
- Other versions (or variants) can be requested from WAGO Sales or configured at https://configurator.wago.com/.

PCB terminal block ▸ 745 Series

CAGE CLAMP® ▸ Actuation type: Operating tool ▸ 6 mm² ▸ Color: gray

1



- Terminal strips with screwdriver-actuated CAGE CLAMP® connection
- Versions with Ex approval
- Unrestricted UL approval up to 600 V with 12.5 mm pin spacing
- Double solder pins for high mechanical stability
- Custom color combinations
- Integrated testing tap
- Marker slot for Mini-WSB and WMB markers

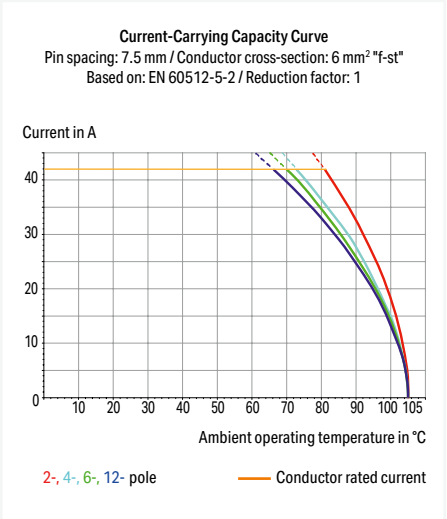

Electrical data						
Pin spacing	**10 mm / 0.394 inches**			**12.5 mm / 0.492 inches; 15 mm / 0.591 inches**		
Ratings per	**IEC/EN 60664-1**			**IEC/EN 60664-1**		
Overvoltage category	III	III	II	III	III	II
Pollution degree	3	2	2	3	2	2
Nominal voltage	800 V	1000 V	1000 V	1000 V	1000 V	1000 V
Rated impulse withstand voltage	8 kV	8 kV	8 kV	8 kV	8 kV	8 kV
Rated current	41 A	41 A	41 A	41 A	41 A	41 A
Approvals per	**UL 1059**			**UL 1059**		
Use group	B	C	D	B	C	D
Rated voltage	300 V	300 V	600 V	600 V	600 V	-
Rated current	10 A	10 A	5 A	30 A	30 A	-
Approvals per	**CSA**			**CSA**		
Use group	B	C	D	B	C	D
Rated voltage	300 V	300 V	600 V	600 V	600 V	-
Rated current	10 A	10 A	5 A	30 A	30 A	-

Connection Data	
Connection technology	CAGE CLAMP®
Strip length	11 … 12 mm / 0.43 … 0.47 inches
Conductor connection direction to PCB	45 °
Solid conductor	0.2 … 6 mm² / 24 … 10 AWG
Fine-stranded conductor	0.2 … 6 mm² / 24 … 10 AWG
Fine-stranded conductor; with insulated ferrule	0.25 … 4 mm²
Fine-stranded conductor; with uninsulated ferrule	0.25 … 4 mm²

Material data	
Material group	I
Insulation material (main housing)	Polyamide (PA66)
Flammability class per UL94	V0
Clamping spring material	Chrome-nickel spring steel (CrNi)
Contact material	Electrolytic copper (E_{Cu})
Contact Plating	Tin

Mechanical data	
Solder pin arrangement	over the entire terminal strip (in-line)
Number of solder pins per potential	2
Solder pin length	4.5 mm
Solder pin dimensions	1 x 1.4 mm
Drilled hole diameter	1.8 $^{(+0.1)}$ mm

Environmental requirements	
Limit temperature range	-60 … +105 °C

Jumper	Page 258
Marking	Page 1064
Test and measurement	Page 1088
Tool	Page 1072
See technical section for further information	
Approvals and corresponding ratings, visit www.wago.com	

PCB terminal block ▸ 745 Series

CAGE CLAMP® ▸ Actuation type: Operating tool ▸ 6 mm² ▸ Color: gray

Pin spacing: 10 mm / 0.394 inches



745-1354

Pole number	Item No.	PU
2	745-1352	104
3	745-1353	72
4	745-1354	48
5	745-1355	40
6	745-1356	32
7	745-1357	24
8	745-1358	24
9	745-1359	24
10	745-1360	16
12	745-1362	16

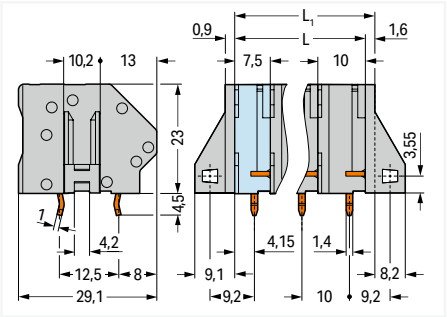

L = (pole no. – 1) x pin spacing + 7.5 mm
L_1 = L + 1.6 mm ≙ version **without** mounting flange

Pin spacing: 12.5 mm / 0.492 inches



745-1404

Pole number	Item No.	PU
2	745-1402	80
3	745-1403	48
4	745-1404	40
5	745-1405	32
6	745-1406	24
7	745-1407	24
8	745-1408	16
9	745-1409	16
10	745-1410	16
12	745-1412	8

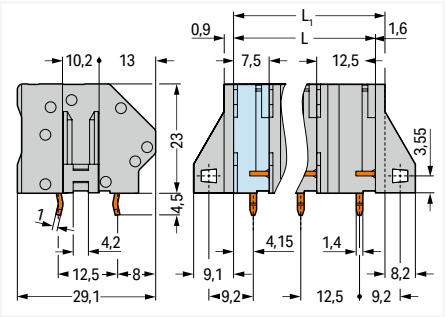

L = (pole no. – 1) x pin spacing + 7.5 mm
L_1 = L + 1.6 mm ≙ version **without** mounting flange

Pin spacing: 15 mm / 0.591 inches



745-1454

Pole number	Item No.	PU
2	745-1452	64
3	745-1453	40
4	745-1454	32
5	745-1455	24
6	745-1456	16
7	745-1457	16
8	745-1458	16
9	745-1459	8
10	745-1460	8
12	745-1462	8

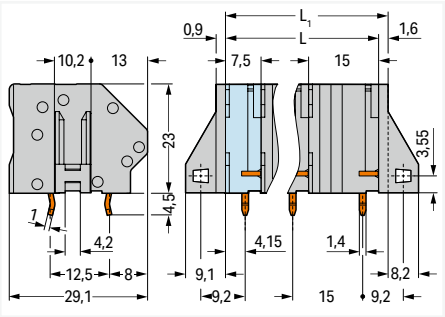

L = (pole no. – 1) x pin spacing + 7.5 mm
L_1 = L + 1.6 mm ≙ version **without** mounting flange

PU = packaging unit; SPU = subpackaging unit; Dimensions in mm

Variants:

- Other pole numbers
- Versions for Ex e II and Ex i
- Other colors
- Mixed-color PCB connector strips
- Versions with mounting flanges
- Direct marking
- Other versions (or variants) can be requested from WAGO Sales or configured at https://configurator.wago.com/.

Stackable PCB terminal block ▸ 745 Series

CAGE CLAMP® ▸ Actuation type: Operating tool ▸ 6 mm² ▸ Number of jumper slots: 1

1



- Modular terminal blocks with screwdriver-actuated CAGE CLAMP® for custom terminal strip assemblies
- Versions with Ex approval
- Common and distribute potentials via comb-style jumper bars
- Double solder pins for high mechanical stability
- Integrated testing tap
- Marker slot for Mini-WSB markers

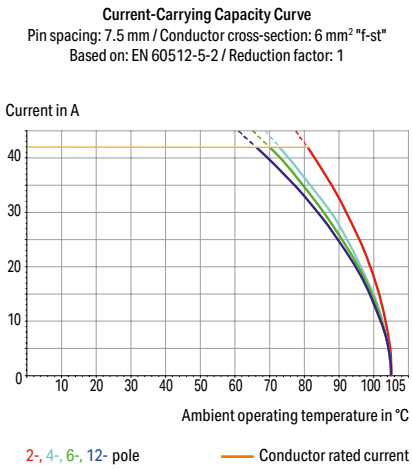

Electrical data						
Pin spacing	**7.5 mm / 0.295 inches**			**10 mm / 0.394 inches**		
Ratings per	**IEC/EN 60664-1**			**IEC/EN 60664-1**		
Overvoltage category	III	III	II	III	III	II
Pollution degree	3	2	2	3	2	2
Nominal voltage	500 V	630 V	1000 V	630 V	1000 V	1000 V
Rated impulse withstand voltage	6 kV	6 kV	6 kV	8 kV	8 kV	8 kV
Rated current	41 A	41 A	41 A	41 A	41 A	41 A
Approvals per	**UL 1059**			**UL 1059**		
Use group	B	C	D	B	C	D
Rated voltage	300 V	150 V	300 V	300 V	150 V	300 V
Rated current	30 A	30 A	10 A	30 A	30 A	10 A
Approvals per	**CSA**			**CSA**		
Use group	B	C	D	B	C	D
Rated voltage	300 V	150 V	300 V	300 V	150 V	300 V
Rated current	30 A	30 A	10 A	30 A	30 A	10 A

Connection Data	
Connection technology	CAGE CLAMP®
Strip length	11 … 12 mm / 0.43 … 0.47 inches
Conductor connection direction to PCB	45 °
Solid conductor	0.2 … 6 mm² / 24 … 10 AWG
Fine-stranded conductor	0.2 … 6 mm² / 24 … 10 AWG
Fine-stranded conductor; with insulated ferrule	0.25 … 4 mm²
Fine-stranded conductor; with uninsulated ferrule	0.25 … 4 mm²

Material data	
Material group	I
Insulation material (main housing)	Polyamide (PA66)
Flammability class per UL94	V0
Clamping spring material	Chrome-nickel spring steel (CrNi)
Contact material	Electrolytic copper (E_{Cu})
Contact Plating	Tin

Mechanical data	
Solder pin arrangement	within the terminal block (in-line)
Number of solder pins per potential	2
Solder pin length	4.5 mm
Solder pin dimensions	1 x 1.4 mm
Drilled hole diameter	1.8 $^{(+0.1)}$ mm

Environmental requirements	
Limit temperature range	-60 … +105 °C

Jumper	Page 258
Marking	Page 1064
Test and measurement	Page 1088
Tool	Page 1072
See technical section for further information	
Approvals and corresponding ratings, visit www.wago.com	

Stackable PCB terminal block ▸ 745 Series

CAGE CLAMP® ▸ Actuation type: Operating tool ▸ 6 mm² ▸ Number of jumper slots: 1

Pin spacing: 7.5 mm / 0.295 inches



745-831

Color	Item No.	PU (SPU)
gray	745-831	100 (50)
blue	745-834	100 (50)
light gray	745-833	100 (50)
green-yellow	745-837	100 (50)
light green	745-838	100 (50)

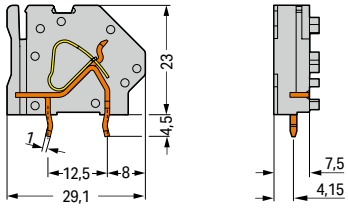

Pin spacing: 10 mm / 0.394 inches



745-841

Color	Item No.	PU (SPU)
gray	745-841	100 (50)
blue	745-844	100 (50)
light gray	745-843	100 (50)
green-yellow	745-847	100 (50)
light green	745-848	100 (50)

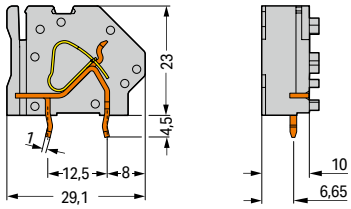

Accessories; for all products on this page



End plate; Width: 1.6 mm; snap-on type



Intermediate plate; extends pin spacing; Width: 2.5 mm / 0.098 inches



End plate; Width: 9.8 mm; Screw mount



End plate; Width: 9.1 mm; Screw mount

PU = packaging unit; SPU = subpackaging unit; Dimensions in mm

Variants:

- Versions for Ex e II and Ex i
- Other colors
- Other versions (or variants) can be requested from WAGO Sales or configured at https://configurator.wago.com/.

PCB terminal block ▸ 745 Series

CAGE CLAMP® ▸ Actuation type: Operating tool ▸ 6 mm² ▸ Number of jumper slots: 1 ▸ Color: gray

1

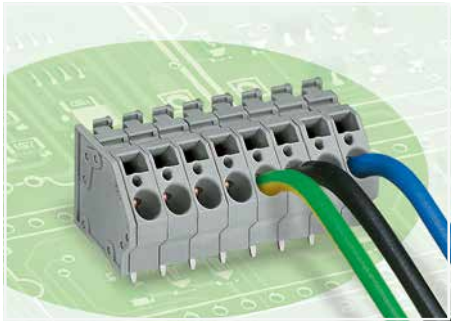

- PCB terminal strips with screwdriver-actuated CAGE CLAMP® connection
- Versions with Ex approval
- Common and distribute potentials via comb-style jumper bars
- Double solder pins for high mechanical stability
- Custom color combinations
- Integrated testing tap
- Marker slot for Mini-WSB markers

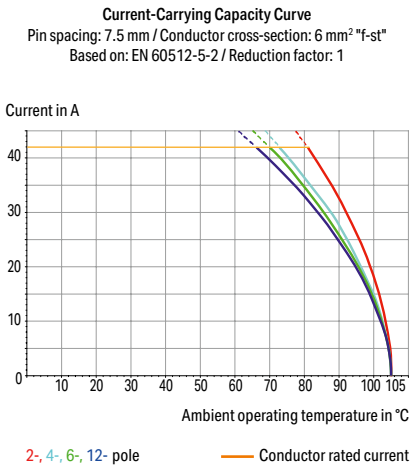

Electrical data						
Pin spacing	**7.5 mm / 0.295 inches**			**10 mm / 0.394 inches**		
Ratings per	**IEC/EN 60664-1**			**IEC/EN 60664-1**		
Overvoltage category	III	III	II	III	III	II
Pollution degree	3	2	2	3	2	2
Nominal voltage	500 V	630 V	1000 V	630 V	1000 V	1000 V
Rated impulse withstand voltage	6 kV	6 kV	6 kV	8 kV	8 kV	8 kV
Rated current	41 A	41 A	41 A	41 A	41 A	41 A
Approvals per	**UL 1059**			**UL 1059**		
Use group	B	C	D	B	C	D
Rated voltage	300 V	150 V	300 V	300 V	150 V	300 V
Rated current	30 A	30 A	10 A	30 A	30 A	10 A
Approvals per	**CSA**			**CSA**		
Use group	B	C	D	B	C	D
Rated voltage	300 V	150 V	300 V	300 V	150 V	300 V
Rated current	30 A	30 A	10 A	30 A	30 A	10 A

Connection Data	
Connection technology	CAGE CLAMP®
Strip length	11 … 12 mm / 0.43 … 0.47 inches
Conductor connection direction to PCB	45 °
Solid conductor	0.2 … 6 mm² / 24 … 10 AWG
Fine-stranded conductor	0.2 … 6 mm² / 24 … 10 AWG
Fine-stranded conductor; with insulated ferrule	0.25 … 4 mm²
Fine-stranded conductor; with uninsulated ferrule	0.25 … 4 mm²

Material data	
Material group	I
Insulation material (main housing)	Polyamide (PA66)
Flammability class per UL94	V0
Clamping spring material	Chrome-nickel spring steel (CrNi)
Contact material	Electrolytic copper (E_{Cu})
Contact Plating	Tin

Mechanical data	
Solder pin arrangement	over the entire terminal strip (in-line)
Number of solder pins per potential	2
Solder pin length	4.5 mm
Solder pin dimensions	1 x 1.4 mm
Drilled hole diameter	1.8 $^{(+0.1)}$ mm

Environmental requirements	
Limit temperature range	-60 … +105 °C

Ferrule	Page 1081
Jumper	Page 258
Marking	Page 1064
Test and measurement	Page 1088
Tool	Page 1072
See technical section for further information	
Approvals and corresponding ratings, visit www.wago.com	

PCB terminal block ▸ 745 Series

CAGE CLAMP® ▸ Actuation type: Operating tool ▸ 6 mm² ▸ Number of jumper slots: 1 ▸ Color: gray

Pin spacing: 7.5 mm / 0.295 inches

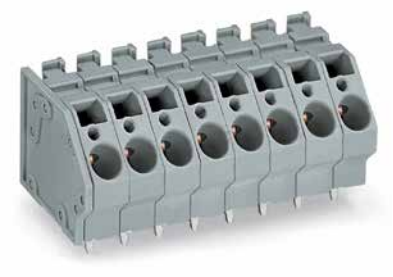

745-308

Pole number	Item No.	PU
2	745-302	128
3	745-303	88
4	745-304	64
5	745-305	48
6	745-306	40
7	745-307	40
8	745-308	32
9	745-309	24
10	745-310	24
12	745-312	16

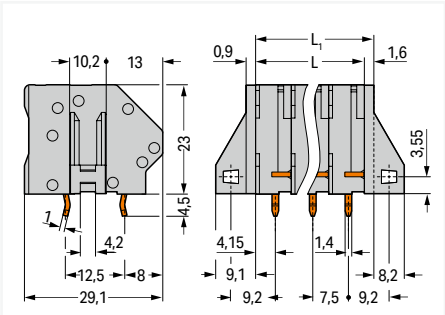

L = (pole no. – 1) x pin spacing + 7.5 mm
L_1 = L + 1.6 mm ≙ version **without** mounting flange

Pin spacing: 10 mm / 0.394 inches



745-357

Pole number	Item No.	PU
2	745-352	104
3	745-353	72
4	745-354	48
5	745-355	40
6	745-356	32
7	745-357	24
8	745-358	24
9	745-359	24
10	745-360	16
12	745-362	16

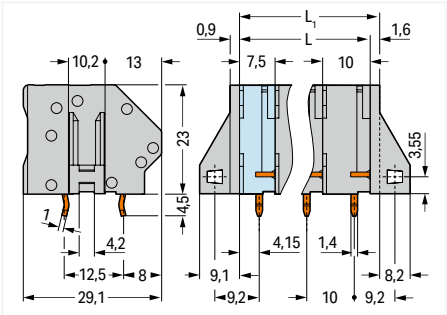

L = (pole no. – 1) x pin spacing + 7.5 mm
L_1 = L + 1.6 mm ≙ version **without** mounting flange

PU = packaging unit; SPU = subpackaging unit; Dimensions in mm

Variants:
- Other pole numbers
- Versions for Ex e II and Ex i
- Other colors
- Mixed-color PCB connector strips
- Versions with mounting flanges
- Direct marking
- Other versions (or variants) can be requested from WAGO Sales or configured at https://configurator.wago.com/.

Stackable PCB terminal block ▸ 745 Series

CAGE CLAMP® ▸ Actuation type: Operating tool ▸ 16 mm² ▸ Number of jumper slots: 1

1

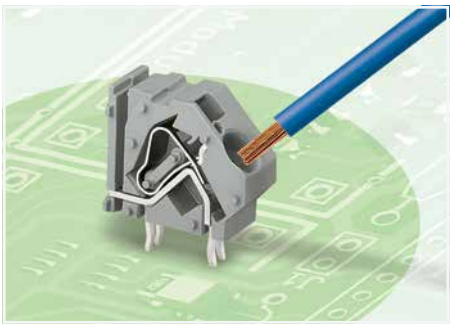

- Modular PCB terminal blocks with screwdriver-actuated CAGE CLAMP® for custom PCB terminal strip assemblies
- Versions with Ex approval
- Unrestricted UL approval up to 600 V with 20 mm pin spacing
- Common and distribute potentials via comb-style jumper bars
- Four solder pins for high mechanical stability
- Integrated testing tap
- Marker slot for Mini-WSB markers

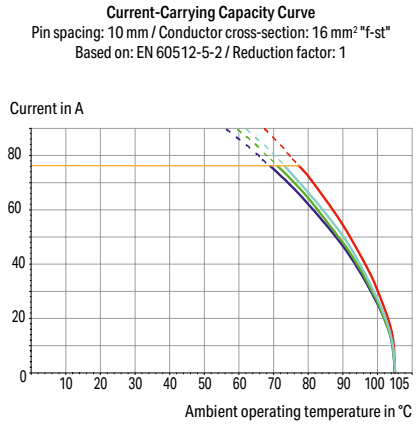

Electrical data									
Pin spacing	**10 mm / 0.394 inches**			**15 mm / 0.591 inches**			**20 mm / 0.787 inches**		
Ratings per	**IEC/EN 60664-1**			**IEC/EN 60664-1**			**IEC/EN 60664-1**		
Overvoltage category	III	III	II	III	III	II	III	III	II
Pollution degree	3	2	2	3	2	2	3	2	2
Nominal voltage	320 V	320 V	630 V	630 V	1000 V	1000 V	1000 V	1000 V	1000 V
Rated impulse withstand voltage	4 kV	4 kV	4 kV	8 kV	8 kV	8 kV	12 kV	12 kV	12 kV
Rated current	76 A	76 A	76 A	76 A	76 A	76 A	76 A	76 A	76 A
Approvals per	**UL 1059**			**UL 1059**			**UL 1059**		
Use group	B	C	D	B	C	D	B	C	D
Rated voltage	300 V	-	300 V	300 V	300 V	600 V	600 V	600 V	-
Rated current	10 A	-	10 A	65 A	65 A	5 A	65 A	65 A	-
Approvals per	**CSA**			**CSA**			**CSA**		
Use group	B	C	D	B	C	D	B	C	D
Rated voltage	300 V	-	300 V	300 V	300 V	600 V	600 V	600 V	-
Rated current	10 A	-	10 A	65 A	65 A	5 A	65 A	65 A	-

Connection Data	
Connection technology	CAGE CLAMP®
Strip length	12 … 13 mm / 0.47 … 0.51 inches
Conductor connection direction to PCB	45 °
Solid conductor	0.2 … 16 mm² / 24 … 6 AWG
Fine-stranded conductor	0.2 … 16 mm² / 24 … 6 AWG
Fine-stranded conductor; with insulated ferrule	0.25 … 10 mm²
Fine-stranded conductor; with uninsulated ferrule	0.25 … 10 mm²

Material data	
Material group	I
Insulation material (main housing)	Polyamide (PA66)
Flammability class per UL94	V0
Clamping spring material	Chrome-nickel spring steel (CrNi)
Contact material	Electrolytic copper (E_{Cu})
Contact Plating	Tin

Mechanical data	
Solder pin arrangement	over the entire terminal strip (in-line)
Number of solder pins per potential	4
Solder pin length	6.5 mm
Solder pin dimensions	1.2 x 1.6 mm
Drilled hole diameter	2.2 $^{(+0.1)}$ mm

Environmental requirements	
Limit temperature range	-60 … +105 °C

Ferrule	Page 1081
Jumper	Page 258
Marking	Page 1064
Test and measurement	Page 1088
Tool	Page 1072
See technical section for further information	
Approvals and corresponding ratings, visit www.wago.com	

Stackable PCB terminal block ▸ 745 Series

CAGE CLAMP® ▸ Actuation type: Operating tool ▸ 16 mm² ▸ Number of jumper slots: 1

Pin spacing: 10 mm / 0.394 inches



745-851/006-000

Color	Item No.	PU (SPU)
gray	745-851/006-000	100 (100)
blue	745-854/006-000	100 (100)
light gray	745-853/006-000	100
green-yellow	745-857/006-000	100 (100)
light green	745-858/006-000	100

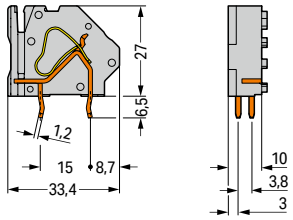

Pin spacing: 15 mm / 0.591 inches



745-871/006-000

Color	Item No.	PU (SPU)
gray	745-871/006-000	100 (100)
blue	745-874/006-000	100 (100)
light gray	745-873/006-000	100 (100)
green-yellow	745-877/006-000	100 (100)
light green	745-878/006-000	100

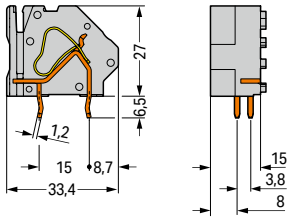

Pin spacing: 20 mm / 0.787 inches



745-881/006-000

Color	Item No.	PU (SPU)
gray	745-881/006-000	50 (50)
blue	745-884/006-000	50 (50)
light gray	745-883/006-000	50 (50)
green-yellow	745-887/006-000	50 (50)
light green	745-888/006-000	50

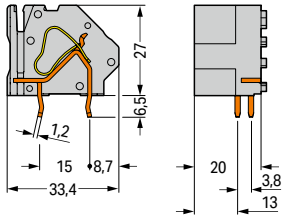

Accessories; for all products on this page



End plate; Width: 1.7 mm; snap-on type



End plate; Width: 10.5 mm; Screw mount

Item No.	PU (SPU)
745-540	200 (50)
745-545	200 (50)

PU = packaging unit; SPU = subpackaging unit; Dimensions in mm

Variants:

- Versions for Ex e II and Ex i
- Other colors
- Solder pin length: 5 mm
- Other versions (or variants) can be requested from WAGO Sales or configured at https://configurator.wago.com/.

PCB terminal block ▸ 745 Series

CAGE CLAMP® ▸ Actuation type: Operating tool ▸ 16 mm² ▸ Number of jumper slots: 1 ▸ Color: gray

1



- PCB terminal strips with screwdriver-actuated CAGE CLAMP® connection
- Versions with Ex approval
- Unrestricted UL approval up to 600 V with 20 mm pin spacing
- Common and distribute potentials via comb-style jumper bars
- Four solder pins for high mechanical stability
- Integrated testing tap
- Marker slot for Mini-WSB markers

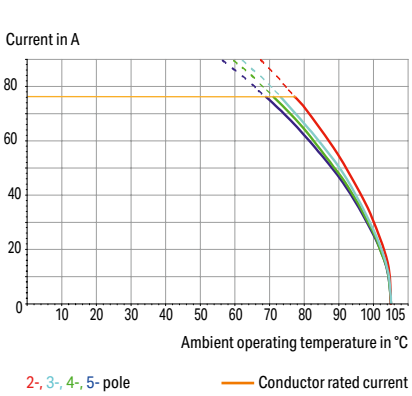

Electrical data									
Pin spacing	**10 mm / 0.394 inches**			**15 mm / 0.591 inches**			**20 mm / 0.787 inches**		
Ratings per	**IEC/EN 60664-1**			**IEC/EN 60664-1**			**IEC/EN 60664-1**		
Overvoltage category	III	III	II	III	III	II	III	III	II
Pollution degree	3	2	2	3	2	2	3	2	2
Nominal voltage	320 V	320 V	630 V	630 V	1000 V	1000 V	1000 V	1000 V	1000 V
Rated impulse withstand voltage	4 kV	4 kV	4 kV	8 kV	8 kV	8 kV	12 kV	12 kV	12 kV
Rated current	76 A	76 A	76 A	76 A	76 A	76 A	76 A	76 A	76 A
Approvals per	**UL 1059**			**UL 1059**			**UL 1059**		
Use group	B	C	D	B	C	D	B	C	D
Rated voltage	300 V	-	300 V	300 V	300 V	600 V	600 V	600 V	-
Rated current	10 A	-	10 A	65 A	65 A	5 A	65 A	65 A	-
Approvals per	**CSA**			**CSA**			**CSA**		
Use group	B	C	D	B	C	D	B	C	D
Rated voltage	300 V	-	300 V	300 V	300 V	600 V	600 V	600 V	-
Rated current	10 A	-	10 A	65 A	65 A	5 A	65 A	65 A	-

Connection Data	
Connection technology	CAGE CLAMP®
Strip length	12 … 13 mm / 0.47 … 0.51 inches
Conductor connection direction to PCB	45 °
Solid conductor	0.2 … 16 mm² / 24 … 6 AWG
Fine-stranded conductor	0.2 … 16 mm² / 24 … 6 AWG
Fine-stranded conductor; with insulated ferrule	0.25 … 10 mm²
Fine-stranded conductor; with uninsulated ferrule	0.25 … 10 mm²

Material data	
Material group	I
Insulation material (main housing)	Polyamide (PA66)
Flammability class per UL94	V0
Clamping spring material	Chrome-nickel spring steel (CrNi)
Contact material	Electrolytic copper (E_{Cu})
Contact Plating	Tin

Mechanical data	
Solder pin arrangement	over the entire terminal strip (in-line)
Number of solder pins per potential	4
Solder pin length	6.5 mm
Solder pin dimensions	1.2 x 1.6 mm
Drilled hole diameter	2.2 $^{(+0.1)}$ mm

Environmental requirements	
Limit temperature range	-60 … +105 °C

Ferrule	Page 1081
Jumper	Page 258
Marking	Page 1064
Test and measurement	Page 1088
Tool	Page 1072
See technical section for further information	
Approvals and corresponding ratings, visit www.wago.com	

PCB terminal block ▸ 745 Series

CAGE CLAMP® ▸ Actuation type: Operating tool ▸ 16 mm² ▸ Number of jumper slots: 1 ▸ Color: gray

Pin spacing: 10 mm / 0.394 inches



745-504/006-000

Pole number	Item No.	PU
2	745-502/006-000	48
3	745-503/006-000	32
4	745-504/006-000	24
5	745-505/006-000	20

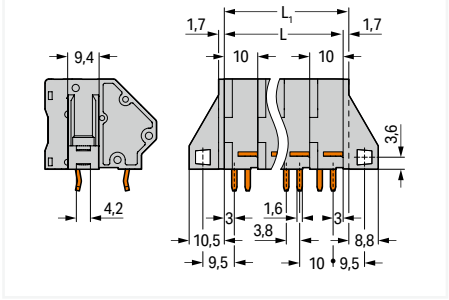

L = (pole no. – 1) x pin spacing + 10 mm
L_1 = L + 1.7 mm ≙ version **without** mounting flange

Pin spacing: 15 mm / 0.591 inches



745-604/006-000

Pole number	Item No.	PU
2	745-602/006-000	36
3	745-603/006-000	24
4	745-604/006-000	16
5	745-605/006-000	12

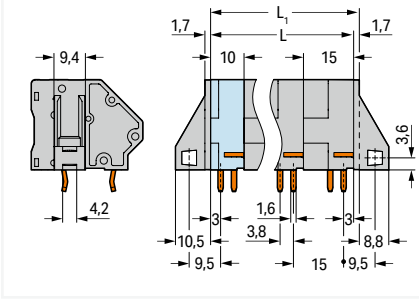

L = (pole no. – 1) x pin spacing + 10 mm
L_1 = L + 1.7 mm ≙ version **without** mounting flange

Pin spacing: 20 mm / 0.787 inches



745-654/006-000

Pole number	Item No.	PU
2	745-652/006-000	32
3	745-653/006-000	20
4	745-654/006-000	12
5	745-655/006-000	8

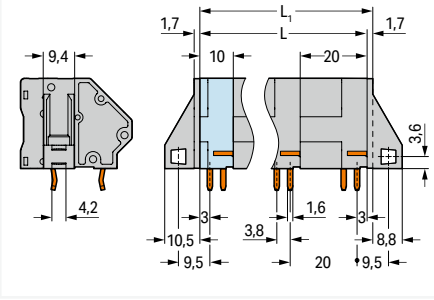

L = (pole no. – 1) x pin spacing + 10 mm
L_1 = L + 1.7 mm ≙ version **without** mounting flange

PU = packaging unit; SPU = subpackaging unit; Dimensions in mm

Variants:
- Other pole numbers
- Versions for Ex e II and Ex i
- Other colors
- Mixed-color PCB connector strips
- Versions with mounting flanges
- Direct marking
- Solder pin length: 5 mm
- Other versions (or variants) can be requested from WAGO Sales or configured at https://configurator.wago.com/.

736, 737 and 738 Series
Description and Installation

1



Inserting a conductor via 3.5 mm screwdriver.
Screwdriver actuation parallel to conductor entry.



Testing via contact area above the conductors.

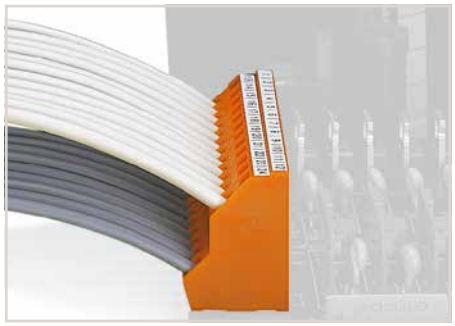

Low space requirements due to high-density design
– double-deck PCB terminal strip – 736 Series.

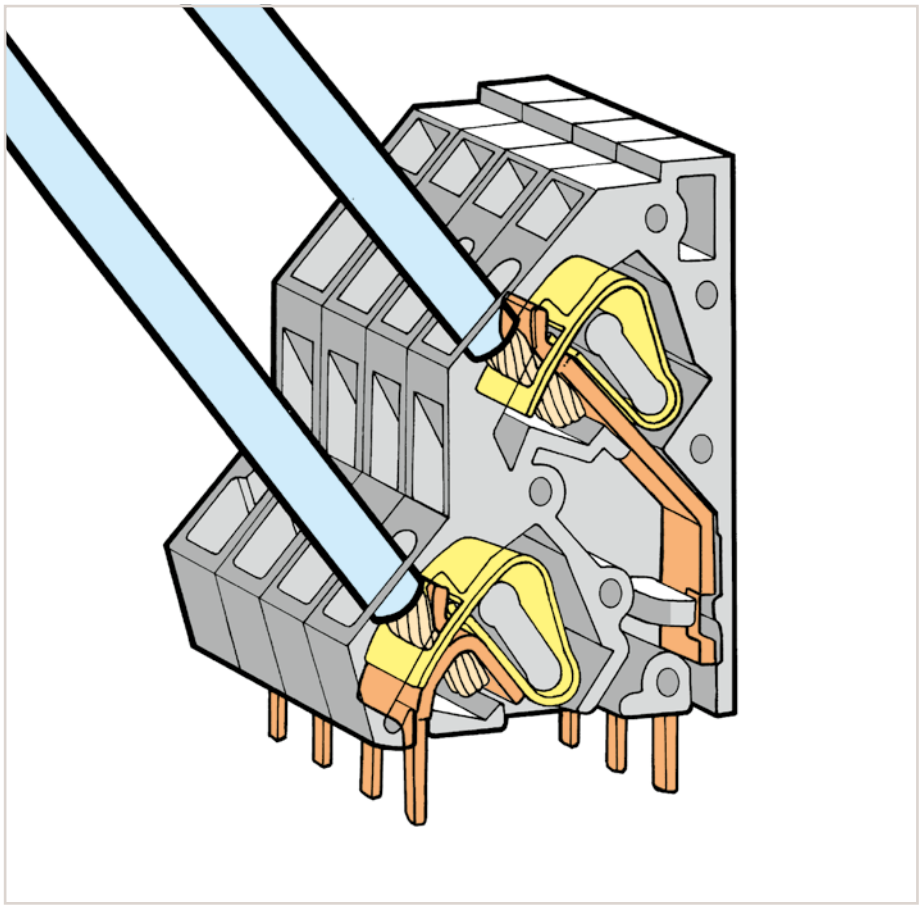

736 Series

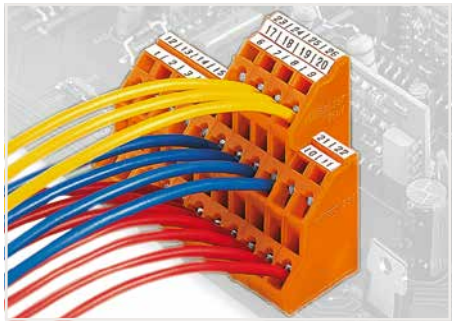

Labeling with self-adhesive marking strips.

736, 737 and 738 Series
Combination of Multilevel PCB Terminal Strips



Possible combination:
Double- (736 Series) and triple-deck PCB terminal strips (737 Series) upon request
Combination of Multilevel PCB Terminal Strips



Possible combination:
Double- (736 Series) and triple-deck PCB terminal strips (737 Series) upon request

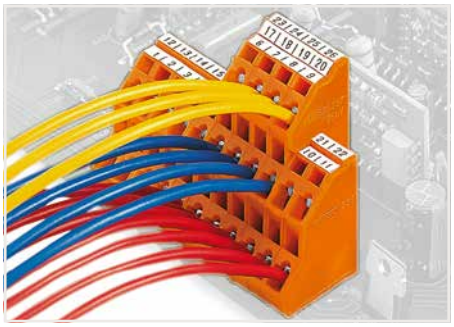



Possible combination:
Double- (737 Series) and quadruple-deck PCB terminal strips (738 Series) upon request



Possible combination:
Double- (737 Series) and quadruple-deck PCB terminal strips (738 Series) upon request

Double-deck PCB terminal block ▸ 736 Series

CAGE CLAMP® ▸ Actuation type: Operating tool ▸ 2.5 mm² ▸ Color: gray

1

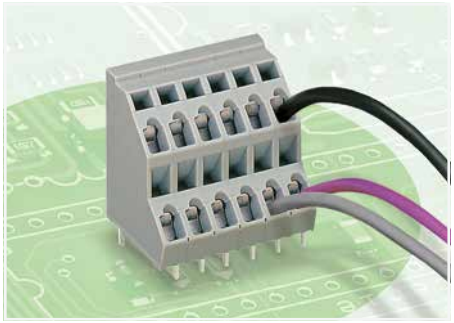

- PCB terminal strips with screwdriver-actuated CAGE CLAMP® connection
- High-density, double-deck design for space-efficient wiring of multiple conductors in confined areas
- Custom marking for all termination levels

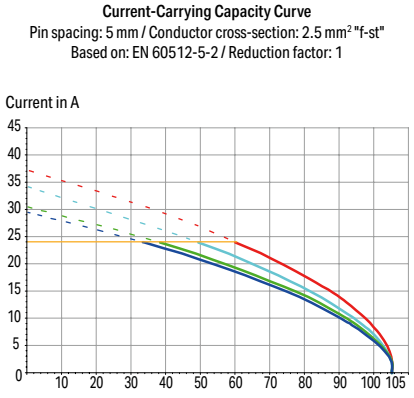

Electrical data									
Pin spacing	**5 mm / 0.197 inches**			**7.5 mm / 0.295 inches**			**10 mm / 0.394 inches**		
Ratings	**between the modules**			**between the modules**			**between the modules**		
Ratings per	IEC/EN 60664-1			IEC/EN 60664-1			IEC/EN 60664-1		
Overvoltage category	III	III	II	III	III	II	III	III	II
Pollution degree	3	2	2	3	2	2	3	2	2
Nominal voltage	250 V	320 V	630 V	400 V	630 V	1000 V	630 V	1000 V	1000 V
Rated impulse withstand voltage	4 kV	4 kV	4 kV	6 kV	6 kV	6 kV	8 kV	8 kV	8 kV
Rated current	21 A	21 A	21 A	21 A	21 A	21 A	21 A	21 A	21 A
Ratings	**between the decks**			**between the decks**			**between the decks**		
Ratings per	IEC/EN 60664-1			IEC/EN 60664-1			IEC/EN 60664-1		
Overvoltage category	III	III	II	III	III	II	III	III	II
Pollution degree	3	2	2	3	2	2	3	2	2
Nominal voltage	320 V	320 V	630 V	320 V	320 V	630 V	320 V	320 V	630 V
Rated impulse withstand voltage	4 kV	4 kV	4 kV	4 kV	4 kV	4 kV	4 kV	4 kV	4 kV
Rated current	21 A	21 A	21 A	21 A	21 A	21 A	21 A	21 A	21 A
Approvals per	**UL 1059**			**UL 1059**			**UL 1059**		
Use group	B	C	D	B	C	D	B	C	D
Rated voltage	300 V	-	300 V	300 V	-	300 V	300 V	-	300 V
Rated current	10 A	-	10 A	10 A	-	10 A	10 A	-	10 A
Approvals per	**CSA**			**CSA**			**CSA**		
Use group	B	C	D	B	C	D	B	C	D
Rated voltage	300 V	-	300 V	300 V	-	300 V	300 V	-	300 V
Rated current	10 A	-	10 A	10 A	-	10 A	10 A	-	10 A

Connection Data	
Connection technology	CAGE CLAMP®
Strip length	5 … 6 mm / 0.2 … 0.24 inches
Conductor connection direction to PCB	45 °
Solid conductor	0.08 … 2.5 mm² / 28 … 12 AWG
Fine-stranded conductor	0.08 … 2.5 mm² / 28 … 12 AWG
Fine-stranded conductor; with insulated ferrule	0.25 … 1.5 mm²
Fine-stranded conductor; with uninsulated ferrule	0.25 … 2.5 mm²
Note (conductor cross-section)	12 AWG: THHN, THWN

Material data	
Material group	I
Insulation material (main housing)	Polyamide (PA66)
Flammability class per UL94	V0
Clamping spring material	Chrome-nickel spring steel (CrNi)
Contact material	Electrolytic copper (E_{Cu})
Contact Plating	Tin

Mechanical data	
Number of solder pins per potential	1
Solder pin length	4 mm
Solder pin dimensions	0.7 x 0.7 mm
Drilled hole diameter	1.3 $^{(+0.1)}$ mm

Environmental requirements	
Limit temperature range	-60 … +105 °C

Ferrule	Page 1081
Marking	Page 1067
Test and measurement	Page 266
Tool	Page 1072
Custom commoning	Page 272
See technical section for further information	
Approvals and corresponding ratings, visit www.wago.com	

Double-deck PCB terminal block ▸ 736 Series

CAGE CLAMP® ▸ Actuation type: Operating tool ▸ 2.5 mm² ▸ Color: gray

Pin spacing: 5 mm / 0.197 inches

Solder pin arrangement within the terminal block (in-line)

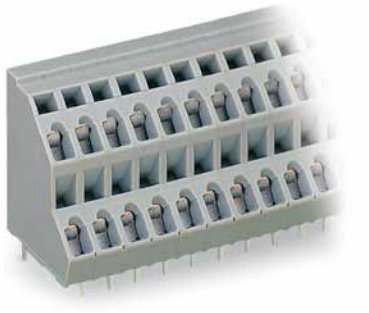

736-112

Pole number	Item No.	PU
4	736-102	161
6	736-103	112
8	736-104	84
12	736-106	56
16	736-108	42
24	736-112	28
32	736-116	21
48	736-124	14

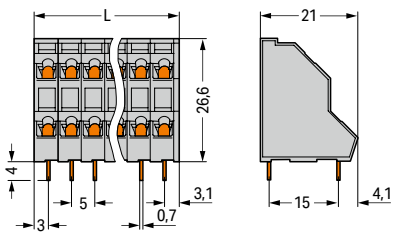

L = ((pole no. / 2) x pin spacing) + 1.1 mm

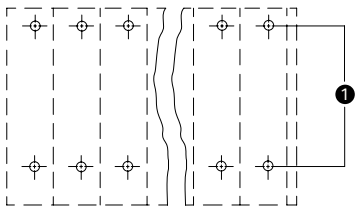

(1) Solder pins in line

Solder pin arrangement within the terminal block (staggered)



736-212

Pole number	Item No.	PU (SPU)
4	736-202	161
6	736-203	112
8	736-204	84
12	736-206	56
16	736-208	42
24	736-212	28
32	736-216	21
48	736-224	14 (1)

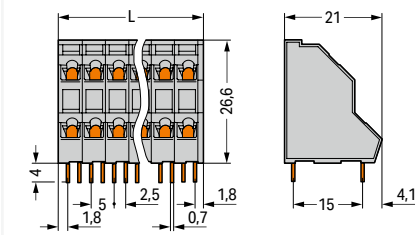

L = ((pole no. / 2) x pin spacing) + 1.1 mm

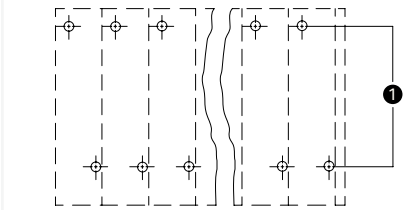

(1) Solder pins staggered by half the pin spacing

PU = packaging unit; SPU = subpackaging unit; Dimensions in mm

Variants:

- Other pole numbers
- Other colors
- Mixed-color PCB connector strips
- Direct marking
- Other versions (or variants) can be requested from WAGO Sales or configured at https://configurator.wago.com/.

Double-deck PCB terminal block ▸ 736 Series

CAGE CLAMP® ▸ Actuation type: Operating tool ▸ 2.5 mm² ▸ Color: gray

1

Pin spacing: 7.5 mm / 0.295 inches

Solder pin arrangement within the terminal block (in-line)



736-508

Pole number	Item No.	PU
4	736-502	133
6	736-503	84
8	736-504	63
12	736-506	42
16	736-508	28
24	736-512	21
32	736-516	14

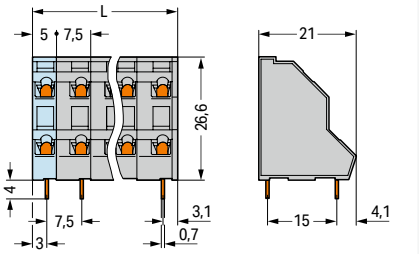

L = ((pole no. / 2) – 1) x pin spacing + 5 mm + 1.1 mm

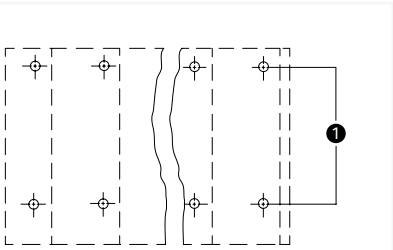

(1) Solder pins in line

Solder pin arrangement within the terminal block (stagge-red)



736-558

Pole number	Item No.	PU
4	736-552	133
6	736-553	84
8	736-554	63
12	736-556	42
16	736-558	28
24	736-562	21
32	736-566	14

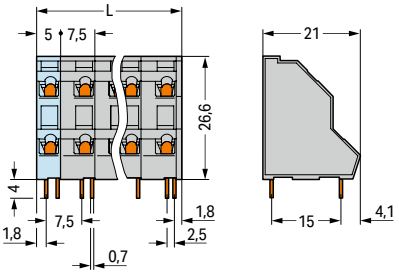

L = ((pole no. / 2) – 1) x pin spacing + 5 mm + 1.1 mm

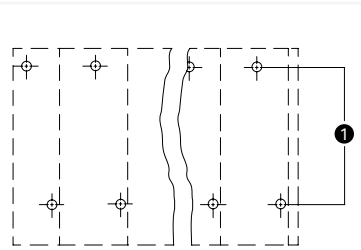

(1) Solder pins staggered by half the pin spacing

PU = packaging unit; SPU = subpackaging unit; Dimensions in mm

Variants:

- Other pole numbers
- Other colors
- Mixed-color PCB connector strips
- Direct marking
- Other versions (or variants) can be requested from WAGO Sales or configured at https://configurator.wago.com/.

Double-deck PCB terminal block ▸ 736 Series

CAGE CLAMP® ▸ Actuation type: Operating tool ▸ 2.5 mm² ▸ Color: gray

Pin spacing: 10 mm / 0.394 inches

Solder pin arrangement within the terminal block (in-line)

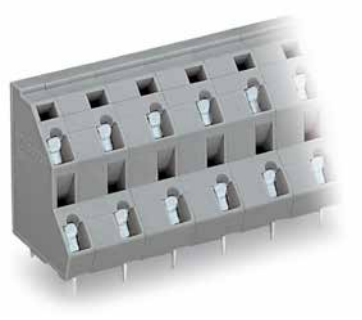

736-706

Pole number	Item No.	PU
4	736-702	112
6	736-703	70
8	736-704	49
12	736-706	28
16	736-708	21
24	736-712	14

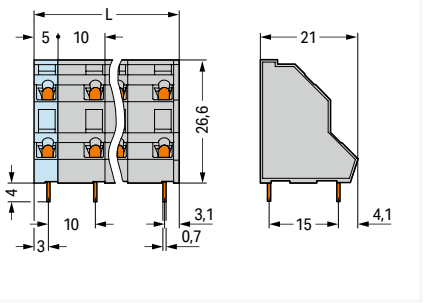

L = ((pole no. / 2) – 1) x pin spacing + 5 mm + 1.1 mm

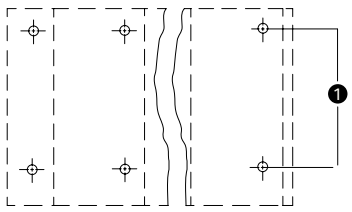

(1) Solder pins in line

Solder pin arrangement within the terminal block (staggered)

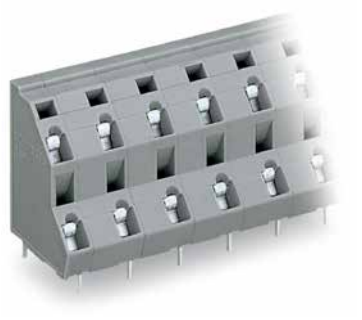

736-756

Pole number	Item No.	PU
4	736-752	112
6	736-753	70
8	736-754	49
12	736-756	28
16	736-758	21
24	736-762	14

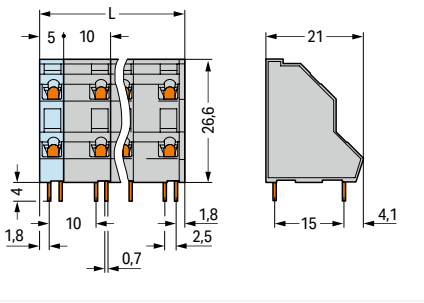

L = ((pole no. / 2) – 1) x pin spacing + 5 mm + 1.1 mm

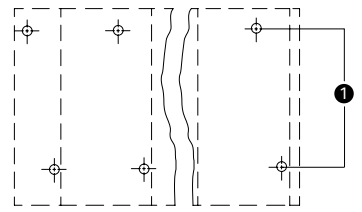

(1) Solder pins staggered by half the pin spacing

PU = packaging unit; SPU = subpackaging unit; Dimensions in mm

Variants:

- Other pole numbers
- Other colors
- Mixed-color PCB connector strips
- Direct marking
- Other versions (or variants) can be requested from WAGO Sales or configured at https://configurator.wago.com/.

Double-deck PCB terminal block ▸ 736 Series

CAGE CLAMP® ▸ Actuation type: Operating tool ▸ 2.5 mm² ▸ Color: orange

1

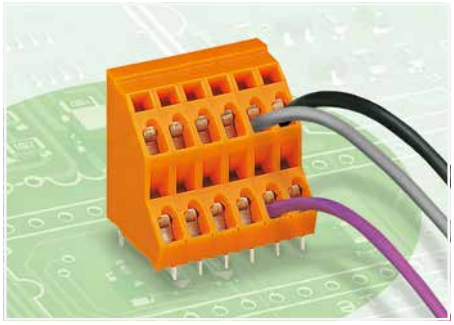

- PCB terminal strips with screwdriver-actuated CAGE CLAMP® connection
- High-density, double-deck design for space-efficient wiring of multiple conductors in confined areas
- Custom marking for all termination levels

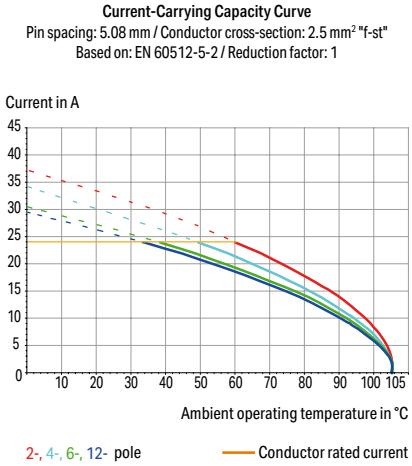

Electrical data									
Pin spacing	**5.08 mm / 0.2 inches**			**7.62 mm / 0.3 inches**			**10.16 mm / 0.4 inches**		
Ratings	**between the modules**			**between the modules**			**between the modules**		
Ratings per	IEC/EN 60664-1			IEC/EN 60664-1			IEC/EN 60664-1		
Overvoltage category	III	III	II	III	III	II	III	III	II
Pollution degree	3	2	2	3	2	2	3	2	2
Nominal voltage	250 V	320 V	630 V	400 V	630 V	1000 V	630 V	1000 V	1000 V
Rated impulse withstand voltage	4 kV	4 kV	4 kV	6 kV	6 kV	6 kV	8 kV	8 kV	8 kV
Rated current	21 A	21 A	21 A	21 A	21 A	21 A	21 A	21 A	21 A
Ratings	**between the decks**			**between the decks**			**between the decks**		
Ratings per	IEC/EN 60664-1			IEC/EN 60664-1			IEC/EN 60664-1		
Overvoltage category	III	III	II	III	III	II	III	III	II
Pollution degree	3	2	2	3	2	2	3	2	2
Nominal voltage	320 V	320 V	630 V	320 V	320 V	630 V	320 V	320 V	630 V
Rated impulse withstand voltage	4 kV	4 kV	4 kV	4 kV	4 kV	4 kV	4 kV	4 kV	4 kV
Rated current	21 A	21 A	21 A	21 A	21 A	21 A	21 A	21 A	21 A
Approvals per	**UL 1059**			**UL 1059**			**UL 1059**		
Use group	B	C	D	B	C	D	B	C	D
Rated voltage	300 V	-	300 V	300 V	-	300 V	300 V	-	300 V
Rated current	10 A	-	10 A	10 A	-	10 A	10 A	-	10 A
Approvals per	**CSA**			**CSA**			**CSA**		
Use group	B	C	D	B	C	D	B	C	D
Rated voltage	300 V	-	300 V	300 V	-	300 V	300 V	-	300 V
Rated current	10 A	-	10 A	10 A	-	10 A	10 A	-	10 A

Connection Data	
Connection technology	CAGE CLAMP®
Strip length	5 … 6 mm / 0.2 … 0.24 inches
Conductor connection direction to PCB	45 °
Solid conductor	0.08 … 2.5 mm² / 28 … 12 AWG
Fine-stranded conductor	0.08 … 2.5 mm² / 28 … 12 AWG
Fine-stranded conductor; with insulated ferrule	0.25 … 1.5 mm²
Fine-stranded conductor; with uninsulated ferrule	0.25 … 2.5 mm²
Note (conductor cross-section)	12 AWG: THHN, THWN

Material data	
Material group	I
Insulation material (main housing)	Polyamide (PA66)
Flammability class per UL94	V0
Clamping spring material	Chrome-nickel spring steel (CrNi)
Contact material	Electrolytic copper (E_{Cu})
Contact Plating	Tin

Mechanical data	
Number of solder pins per potential	1
Solder pin length	4 mm
Solder pin dimensions	0.7 x 0.7 mm
Drilled hole diameter	1.3 $^{(+0.1)}$ mm

Environmental requirements	
Limit temperature range	-60 … +105 °C

Ferrule	Page 1081
Marking	Page 1067
Test and measurement	Page 266
Tool	Page 1072
Custom commoning	Page 272
See technical section for further information	
Approvals and corresponding ratings, visit www.wago.com	

Double-deck PCB terminal block ▸ 736 Series

CAGE CLAMP® ▸ Actuation type: Operating tool ▸ 2.5 mm² ▸ Color: orange

Pin spacing: 5.08 mm / 0.2 inches

Solder pin arrangement within the terminal block (in-line)

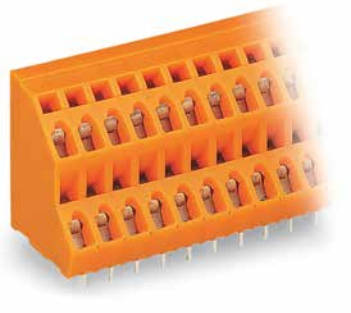

736-312

Pole number	Item No.	PU
4	736-302	161
6	736-303	112
8	736-304	84
12	736-306	56
16	736-308	42
24	736-312	28
32	736-316	21
48	736-324	14

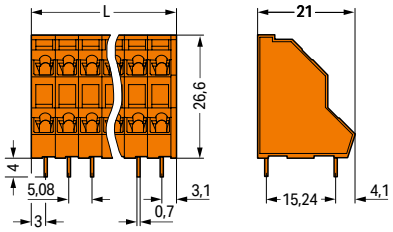

L = ((pole no. / 2) x pin spacing) + 1.1 mm

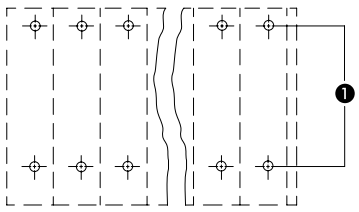

(1) Solder pins in line

Solder pin arrangement within the terminal block (staggered)

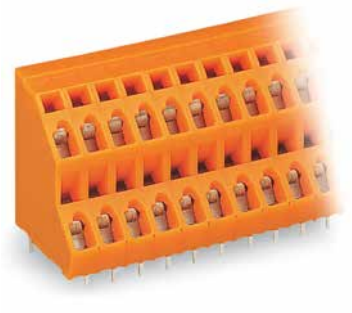

736-412

Pole number	Item No.	PU
4	736-402	161
6	736-403	112
8	736-404	84
12	736-406	56
16	736-408	42
24	736-412	28
32	736-416	21
48	736-424	14

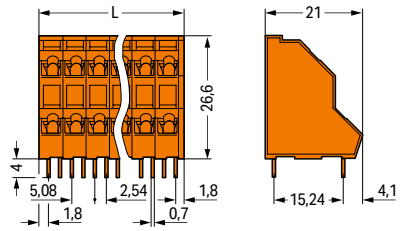

L = ((pole no. / 2) x pin spacing) + 1.1 mm

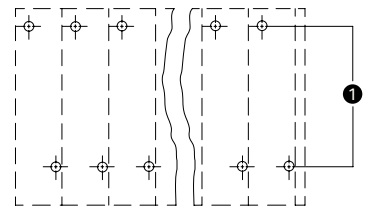

(1) Solder pins staggered by half the pin spacing

PU = packaging unit; SPU = subpackaging unit; Dimensions in mm

Variants:

- Other pole numbers
- Other colors
- Mixed-color PCB connector strips
- Direct marking
- Other versions (or variants) can be requested from WAGO Sales or configured at https://configurator.wago.com/.

Double-deck PCB terminal block ▸ 736 Series

CAGE CLAMP® ▸ Actuation type: Operating tool ▸ 2.5 mm² ▸ Color: orange

Pin spacing: 7.62 mm / 0.3 inches

1

Solder pin arrangement within the terminal block (in-line)

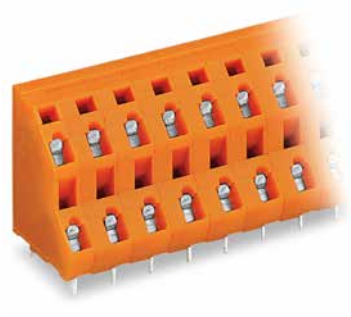

736-608

Pole number	Item No.	PU (SPU)
4	736-602	133
6	736-603	84 (21)
8	736-604	63
12	736-606	35
16	736-608	28
24	736-612	14
32	736-616	14

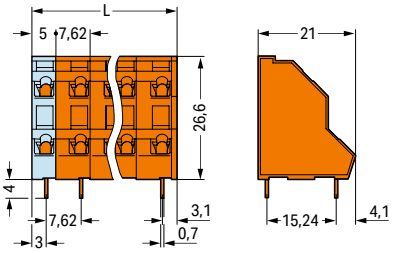

L = ((pole no. / 2) – 1) x pin spacing + 5 mm + 1.1 mm

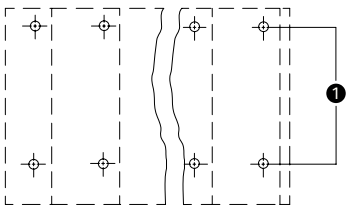

(1) Solder pins in line

Solder pin arrangement within the terminal block (stagge-red)

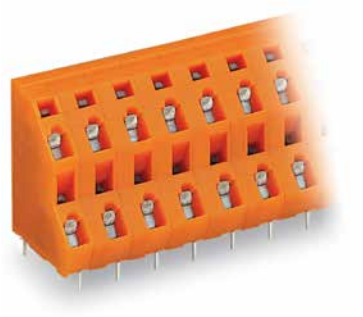

736-658

Pole number	Item No.	PU
4	736-652	133
6	736-653	84
8	736-654	63
12	736-656	35
16	736-658	28
24	736-662	14
32	736-666	14

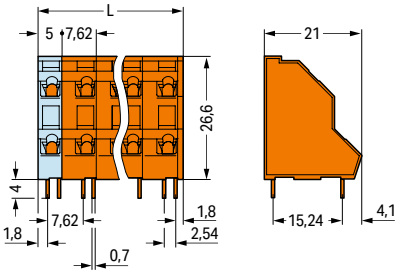

L = ((pole no. / 2) – 1) x pin spacing + 5 mm + 1.1 mm

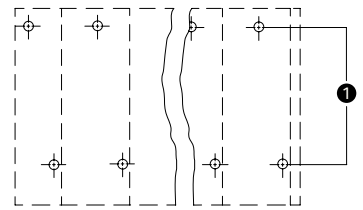

(1) Solder pins staggered by half the pin spacing

PU = packaging unit; SPU = subpackaging unit; Dimensions in mm

Variants:

- Other pole numbers
- Other colors
- Mixed-color PCB connector strips
- Direct marking
- Other versions (or variants) can be requested from WAGO Sales or configured at https://configurator.wago.com/.

Double-deck PCB terminal block ▸ 736 Series

CAGE CLAMP® ▸ Actuation type: Operating tool ▸ 2.5 mm² ▸ Color: orange

Pin spacing: 10.16 mm / 0.4 inches

Solder pin arrangement within the terminal block (in-line)

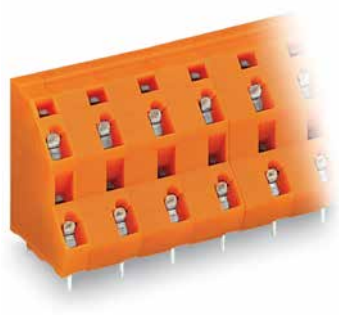

736-806

Pole number	Item No.	PU
4	736-802	112
6	736-803	70
8	736-804	49
12	736-806	28
16	736-808	21
24	736-812	14

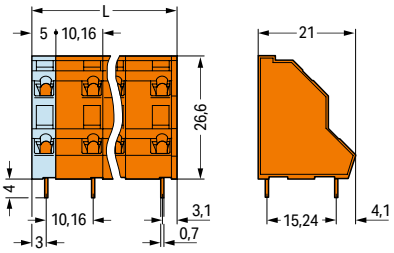

L = ((pole no. / 2) – 1) x pin spacing + 5 mm + 1.1 mm

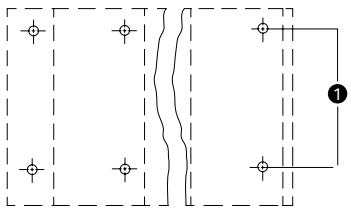

(1) Solder pins in line

Solder pin arrangement within the terminal block (staggered)

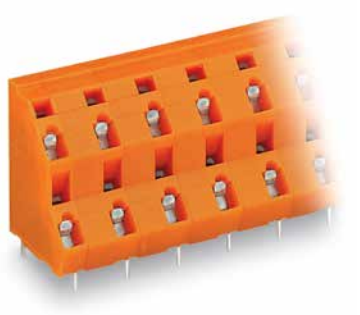

736-856

Pole number	Item No.	PU
4	736-852	112
6	736-853	70
8	736-854	49
12	736-856	28
16	736-858	21
24	736-862	14

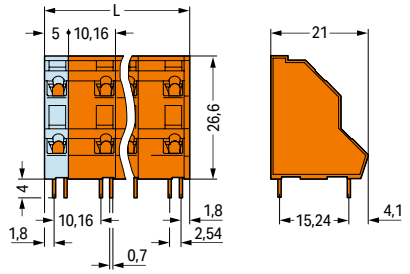

L = ((pole no. / 2) – 1) x pin spacing + 5 mm + 1.1 mm

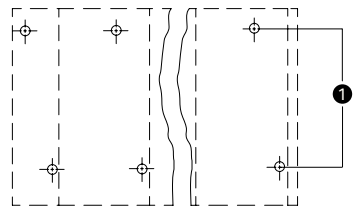

(1) Solder pins staggered by half the pin spacing

PU = packaging unit; SPU = subpackaging unit; Dimensions in mm

Variants:

- Other pole numbers
- Other colors
- Mixed-color PCB connector strips
- Direct marking
- Other versions (or variants) can be requested from WAGO Sales or configured at https://configurator.wago.com/.

Triple-deck PCB terminal block ▸ 737 Series

CAGE CLAMP® ▸ Actuation type: Operating tool ▸ 2.5 mm² ▸ Color: gray

1

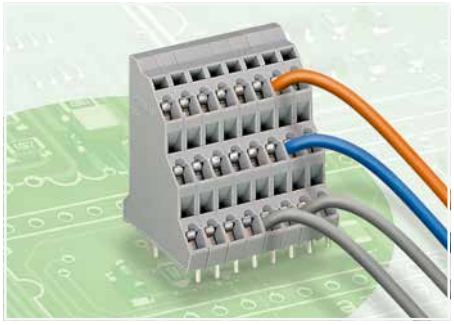

- PCB terminal strips with screwdriver-actuated CAGE CLAMP® connection
- High-density, triple-deck design for space-efficient wiring of multiple conductors in confined areas
- Custom marking for all termination levels

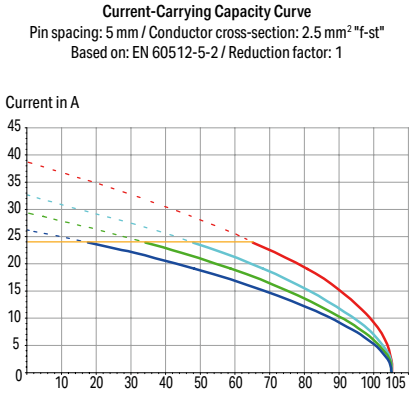

Electrical data									
Pin spacing	**5 mm / 0.197 inches**			**7.5 mm / 0.295 inches**			**10 mm / 0.394 inches**		
Ratings	**between the modules**			**between the modules**			**between the modules**		
Ratings per	IEC/EN 60664-1			IEC/EN 60664-1			IEC/EN 60664-1		
Overvoltage category	III	III	II	III	III	II	III	III	II
Pollution degree	3	2	2	3	2	2	3	2	2
Nominal voltage	250 V	320 V	630 V	400 V	630 V	1000 V	630 V	1000 V	1000 V
Rated impulse withstand voltage	4 kV	4 kV	4 kV	6 kV	6 kV	6 kV	8 kV	8 kV	8 kV
Rated current	21 A	21 A	21 A	21 A	21 A	21 A	21 A	21 A	21 A
Ratings	**between the decks**			**between the decks**			**between the decks**		
Ratings per	IEC/EN 60664-1			IEC/EN 60664-1			IEC/EN 60664-1		
Overvoltage category	III	III	II	III	III	II	III	III	II
Pollution degree	3	2	2	3	2	2	3	2	2
Nominal voltage	320 V	320 V	630 V	320 V	320 V	630 V	320 V	320 V	630 V
Rated impulse withstand voltage	4 kV	4 kV	4 kV	4 kV	4 kV	4 kV	4 kV	4 kV	4 kV
Rated current	21 A	21 A	21 A	21 A	21 A	21 A	21 A	21 A	21 A
Approvals per	**UL 1059**			**UL 1059**			**UL 1059**		
Use group	B	C	D	B	C	D	B	C	D
Rated voltage	300 V	-	300 V	300 V	-	300 V	300 V	-	300 V
Rated current	10 A	-	10 A	10 A	-	10 A	10 A	-	10 A
Approvals per	**CSA**			**CSA**			**CSA**		
Use group	B	C	D	B	C	D	B	C	D
Rated voltage	300 V	-	300 V	300 V	-	300 V	300 V	-	300 V
Rated current	10 A	-	10 A	10 A	-	10 A	10 A	-	10 A

Connection Data	
Connection technology	CAGE CLAMP®
Strip length	5 … 6 mm / 0.2 … 0.24 inches
Conductor connection direction to PCB	45 °
Solid conductor	0.08 … 2.5 mm² / 28 … 12 AWG
Fine-stranded conductor	0.08 … 2.5 mm² / 28 … 12 AWG
Fine-stranded conductor; with insulated ferrule	0.25 … 1.5 mm²
Fine-stranded conductor; with uninsulated ferrule	0.25 … 2.5 mm²
Note (conductor cross-section)	12 AWG: THHN, THWN

Material data	
Material group	I
Insulation material (main housing)	Polyamide (PA66)
Flammability class per UL94	V0
Clamping spring material	Chrome-nickel spring steel (CrNi)
Contact material	Electrolytic copper (E_{Cu})
Contact Plating	Tin

Mechanical data	
Number of solder pins per potential	1
Solder pin length	4 mm
Solder pin dimensions	0.7 x 0.7 mm
Drilled hole diameter	1.3 $^{(+0.1)}$ mm

Environmental requirements	
Limit temperature range	-60 … +105 °C

Ferrule	Page 1081
Marking	Page 1067
Test and measurement	Page 266
Tool	Page 1072
Custom commoning	Page 272
See technical section for further information	
Approvals and corresponding ratings, visit www.wago.com	

Triple-deck PCB terminal block ▸ 737 Series

CAGE CLAMP® ▸ Actuation type: Operating tool ▸ 2.5 mm² ▸ Color: gray

Pin spacing: 5 mm / 0.197 inches

Solder pin arrangement within the terminal block (in-line)



737-112

Pole number	Item No.	PU
6	737-102	92
9	737-103	64
12	737-104	48
18	737-106	32
24	737-108	24
36	737-112	16
48	737-116	12
72	737-124	8

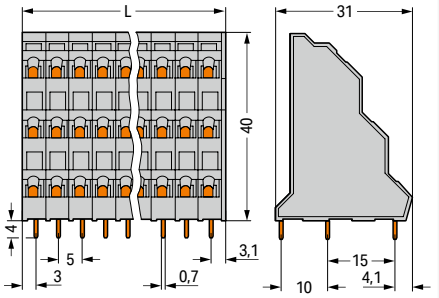

L = ((pole no. / 3) x pin spacing) + 1.1 mm

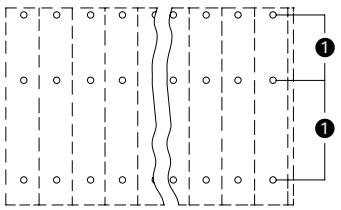

(1) Solder pins in line

Solder pin arrangement within the terminal block (staggered)



737-212

Pole number	Item No.	PU
6	737-202	92
9	737-203	64
12	737-204	48
18	737-206	32
24	737-208	24
36	737-212	16
48	737-216	12
72	737-224	8

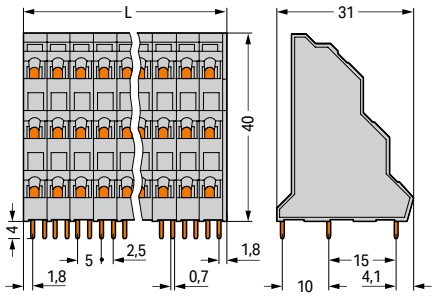

L = ((pole no. / 3) x pin spacing) + 1.1 mm

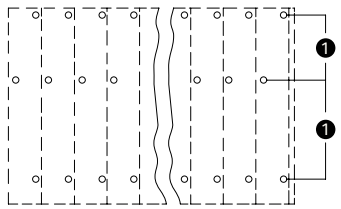

(1) Solder pins for deck 2 staggered by half the pin spacing

PU = packaging unit; SPU = subpackaging unit; Dimensions in mm

Variants:

- Other pole numbers
- Other colors
- Mixed-color PCB connector strips
- Direct marking
- Other versions (or variants) can be requested from WAGO Sales or configured at https://configurator.wago.com/.

Triple-deck PCB terminal block ▸ 737 Series

CAGE CLAMP® ▸ Actuation type: Operating tool ▸ 2.5 mm² ▸ Color: gray

1

Pin spacing: 7.5 mm / 0.295 inches

Solder pin arrangement within the terminal block (in-line)



737-508

Pole number	Item No.	PU
6	737-502	76
9	737-503	48
12	737-504	36
18	737-506	24
24	737-508	16
36	737-512	8
48	737-516	8

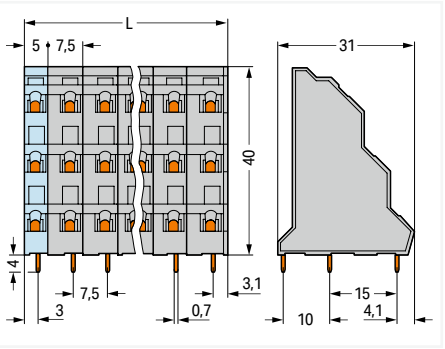

L = ((pole no. / 3) – 1) x pin spacing + 5 mm + 1.1 mm

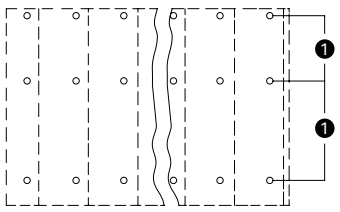

(1) Solder pins in line

Solder pin arrangement within the terminal block (staggered)

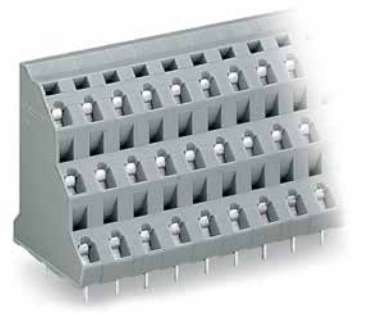

737-558

Pole number	Item No.	PU
6	737-552	76
9	737-553	48
12	737-554	36
18	737-556	24
24	737-558	16
36	737-562	8
48	737-566	8

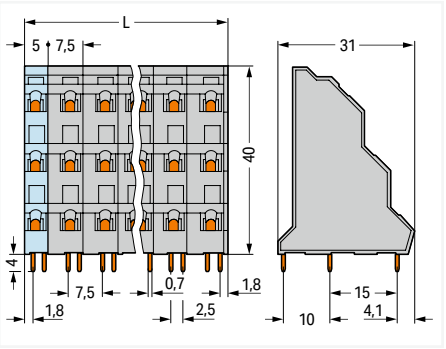

L = ((pole no. / 3) – 1) x pin spacing + 5 mm + 1.1 mm

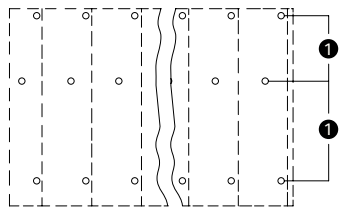

(1) Solder pins for deck 2 staggered by half the pin spacing

PU = packaging unit; SPU = subpackaging unit; Dimensions in mm

Variants:

- Other pole numbers
- Other colors
- Mixed-color PCB connector strips
- Direct marking
- Other versions (or variants) can be requested from WAGO Sales or configured at https://configurator.wago.com/.

Triple-deck PCB terminal block ▸ 737 Series

CAGE CLAMP® ▸ Actuation type: Operating tool ▸ 2.5 mm² ▸ Color: gray

Pin spacing: 10 mm / 0.394 inches

Solder pin arrangement within the terminal block (in-line)



737-708

Pole number	Item No.	PU
6	737-702	64
9	737-703	40
12	737-704	28
18	737-706	16
24	737-708	12
36	737-712	8

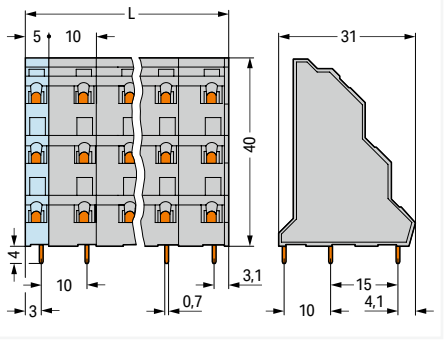

L = ((pole no. / 3) – 1) x pin spacing + 5 mm + 1.1 mm

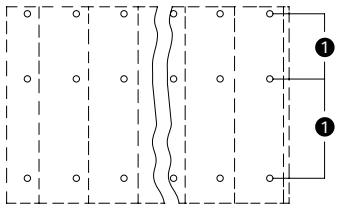

(1) Solder pins in line

Solder pin arrangement within the terminal block (staggered)



737-758

Pole number	Item No.	PU
6	737-752	64
9	737-753	40
12	737-754	28
18	737-756	16
24	737-758	12
36	737-762	8

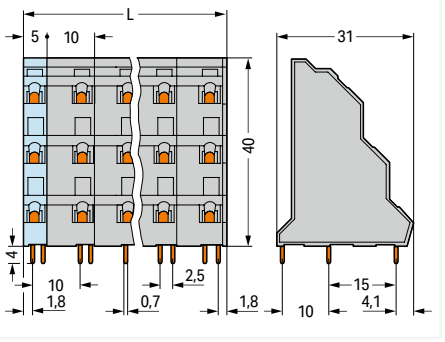

L = ((pole no. / 3) – 1) x pin spacing + 5 mm + 1.1 mm

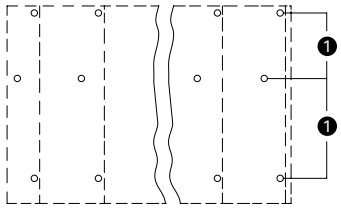

(1) Solder pins for deck 2 staggered by half the pin spacing

PU = packaging unit; SPU = subpackaging unit; Dimensions in mm

Variants:

- Other pole numbers
- Other colors
- Mixed-color PCB connector strips
- Direct marking
- Other versions (or variants) can be requested from WAGO Sales or configured at https://configurator.wago.com/.

Triple-deck PCB terminal block ▸ 737 Series

CAGE CLAMP® ▸ Actuation type: Operating tool ▸ 2.5 mm² ▸ Color: orange

1

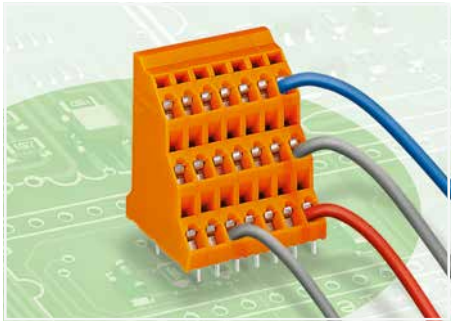

- PCB terminal strips with screwdriver-actuated CAGE CLAMP® connection
- High-density, triple-deck design for space-efficient wiring of multiple conductors in confined areas
- Custom marking for all termination levels

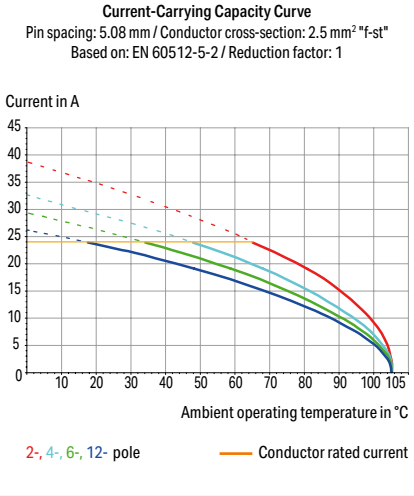

Electrical data									
Pin spacing	**5.08 mm / 0.2 inches**			**7.62 mm / 0.3 inches**			**10.16 mm / 0.4 inches**		
Ratings	**between the modules**			**between the modules**			**between the modules**		
Ratings per	IEC/EN 60664-1			IEC/EN 60664-1			IEC/EN 60664-1		
Overvoltage category	III	III	II	III	III	II	III	III	II
Pollution degree	3	2	2	3	2	2	3	2	2
Nominal voltage	250 V	320 V	630 V	400 V	630 V	1000 V	630 V	1000 V	1000 V
Rated impulse withstand voltage	4 kV	4 kV	4 kV	6 kV	6 kV	6 kV	8 kV	8 kV	8 kV
Rated current	21 A	21 A	21 A	21 A	21 A	21 A	21 A	21 A	21 A
Ratings	**between the decks**			**between the decks**			**between the decks**		
Ratings per	IEC/EN 60664-1			IEC/EN 60664-1			IEC/EN 60664-1		
Overvoltage category	III	III	II	III	III	II	III	III	II
Pollution degree	3	2	2	3	2	2	3	2	2
Nominal voltage	320 V	320 V	630 V	320 V	320 V	630 V	320 V	320 V	630 V
Rated impulse withstand voltage	4 kV	4 kV	4 kV	4 kV	4 kV	4 kV	4 kV	4 kV	4 kV
Rated current	21 A	21 A	21 A	21 A	21 A	21 A	21 A	21 A	21 A
Approvals per	**UL 1059**			**UL 1059**			**UL 1059**		
Use group	B	C	D	B	C	D	B	C	D
Rated voltage	300 V	-	300 V	300 V	-	300 V	300 V	-	300 V
Rated current	10 A	-	10 A	10 A	-	10 A	10 A	-	10 A
Approvals per	**CSA**			**CSA**			**CSA**		
Use group	B	C	D	B	C	D	B	C	D
Rated voltage	300 V	-	300 V	300 V	-	300 V	300 V	-	300 V
Rated current	10 A	-	10 A	10 A	-	10 A	10 A	-	10 A

Connection Data	
Connection technology	CAGE CLAMP®
Strip length	5 … 6 mm / 0.2 … 0.24 inches
Conductor connection direction to PCB	45 °
Solid conductor	0.08 … 2.5 mm² / 28 … 12 AWG
Fine-stranded conductor	0.08 … 2.5 mm² / 28 … 12 AWG
Fine-stranded conductor; with insulated ferrule	0.25 … 1.5 mm²
Fine-stranded conductor; with uninsulated ferrule	0.25 … 2.5 mm²
Note (conductor cross-section)	12 AWG: THHN, THWN

Material data	
Material group	I
Insulation material (main housing)	Polyamide (PA66)
Flammability class per UL94	V0
Clamping spring material	Chrome-nickel spring steel (CrNi)
Contact material	Electrolytic copper (E_{Cu})
Contact Plating	Tin

Mechanical data	
Number of solder pins per potential	1
Solder pin length	4 mm
Solder pin dimensions	0.7 x 0.7 mm
Drilled hole diameter	1.3 $^{(+0.1)}$ mm

Environmental requirements	
Limit temperature range	-60 … +105 °C

Ferrule	Page 1081
Marking	Page 1067
Test and measurement	Page 266
Tool	Page 1072
Custom commoning	Page 272
See technical section for further information	
Approvals and corresponding ratings, visit www.wago.com	

Triple-deck PCB terminal block ▸ 737 Series

CAGE CLAMP® ▸ Actuation type: Operating tool ▸ 2.5 mm² ▸ Color: orange

Pin spacing: 5.08 mm / 0.2 inches

Solder pin arrangement within the terminal block (in-line)

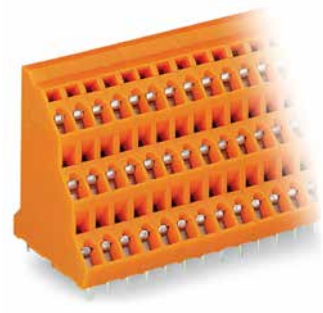

737-312

Pole number	Item No.	PU
6	737-302	92
9	737-303	64
12	737-304	48
18	737-306	32
24	737-308	24
36	737-312	16
48	737-316	12
72	737-324	8

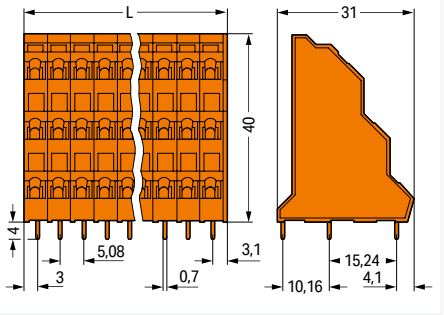

L = ((pole no. / 3) x pin spacing) + 1.1 mm

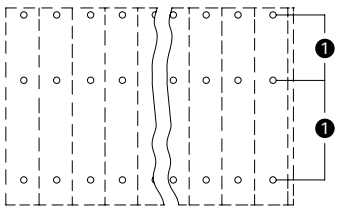

(1) Solder pins in line

Solder pin arrangement within the terminal block (staggered)

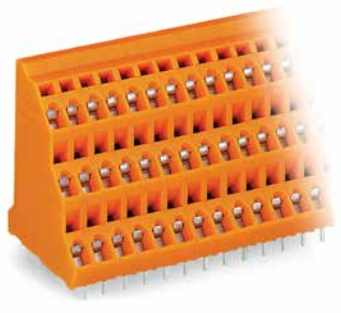

737-412

Pole number	Item No.	PU
6	737-402	96
9	737-403	64
12	737-404	48
18	737-406	32
24	737-408	24
36	737-412	16
48	737-416	12
72	737-424	8

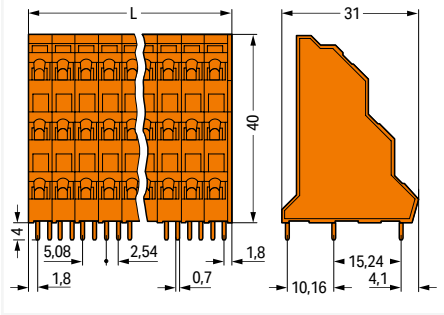

L = ((pole no. / 3) x pin spacing) + 1.1 mm

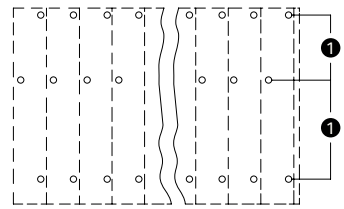

(1) Solder pins for deck 2 staggered by half the pin spacing

PU = packaging unit; SPU = subpackaging unit; Dimensions in mm

Variants:

- Other pole numbers
- Other colors
- Mixed-color PCB connector strips
- Direct marking
- Other versions (or variants) can be requested from WAGO Sales or configured at https://configurator.wago.com/.

Triple-deck PCB terminal block ▸ 737 Series

CAGE CLAMP® ▸ Actuation type: Operating tool ▸ 2.5 mm² ▸ Color: orange

1

Pin spacing: 7.62 mm / 0.3 inches

Solder pin arrangement within the terminal block (in-line)

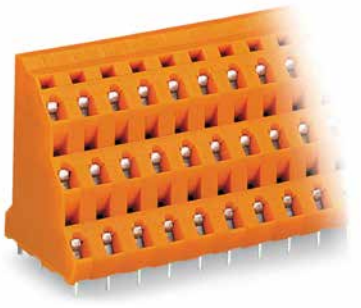

737-608

Pole number	Item No.	PU
6	737-602	76
9	737-603	48
12	737-604	36
18	737-606	20
24	737-608	16
36	737-612	8
48	737-616	8

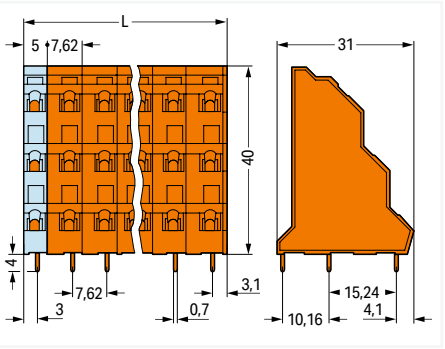

L = ((pole no. / 3) – 1) x pin spacing + 5 mm + 1.1 mm

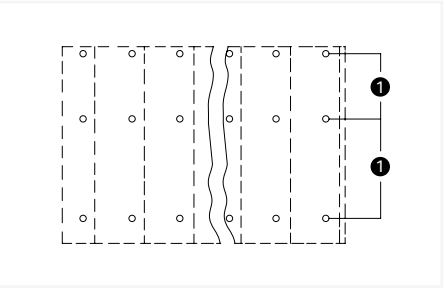

(1) Solder pins in line

Solder pin arrangement within the terminal block (stagge-red)

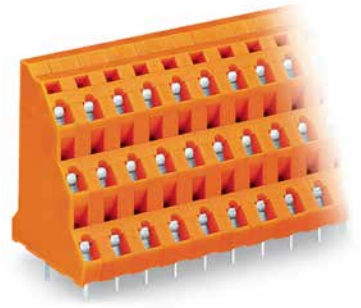

737-658

Pole number	Item No.	PU
6	737-652	76
9	737-653	48
12	737-654	36
18	737-656	20
24	737-658	16
36	737-662	8
48	737-666	8

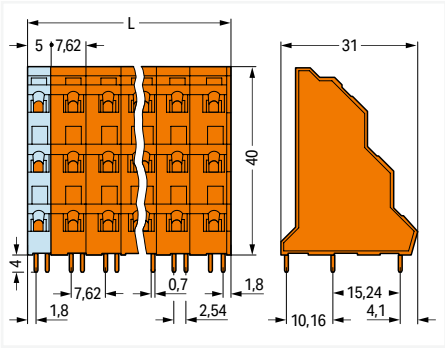

L = ((pole no. / 3) – 1) x pin spacing + 5 mm + 1.1 mm

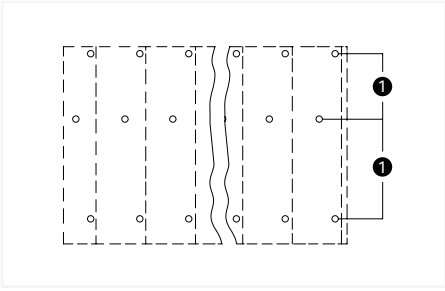

(1) Solder pins for deck 2 staggered by half the pin spacing

PU = packaging unit; SPU = subpackaging unit; Dimensions in mm

Variants:

- Other pole numbers
- Other colors
- Mixed-color PCB connector strips
- Direct marking
- Other versions (or variants) can be requested from WAGO Sales or configured at https://configurator.wago.com/.

Triple-deck PCB terminal block ▸ 737 Series

CAGE CLAMP® ▸ Actuation type: Operating tool ▸ 2.5 mm² ▸ Color: orange

Pin spacing: 10.16 mm / 0.4 inches

Solder pin arrangement within the terminal block (in-line)	Solder pin arrangement within the terminal block (staggered)

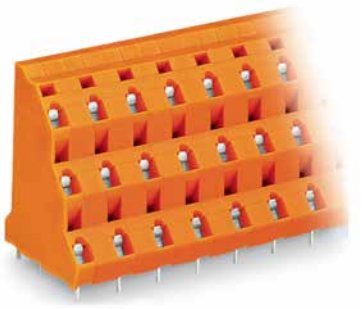

737-808

Pole number	Item No.	PU
6	737-802	64
9	737-803	40
12	737-804	28
18	737-806	16
24	737-808	12
36	737-812	8

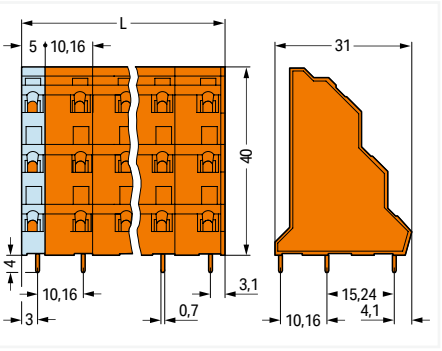

L = ((pole no. / 3) – 1) x pin spacing + 5 mm + 1.1 mm

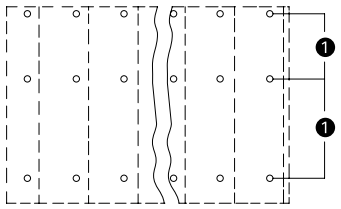

(1) Solder pins in line

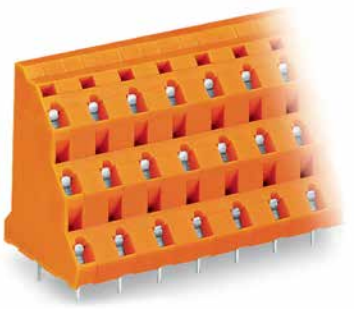

737-858

Pole number	Item No.	PU
6	737-852	64
9	737-853	40
12	737-854	28
18	737-856	16
24	737-858	12
36	737-862	8

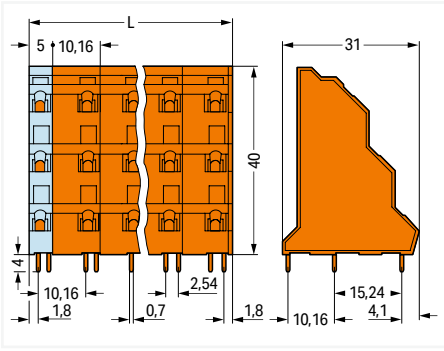

L = ((pole no. / 3) – 1) x pin spacing + 5 mm + 1.1 mm

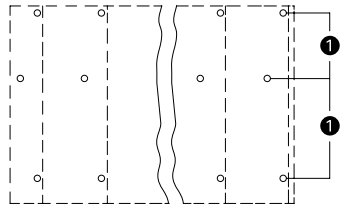

(1) Solder pins for deck 2 staggered by half the pin spacing

PU = packaging unit; SPU = subpackaging unit; Dimensions in mm

Variants:

- Other pole numbers
- Other colors
- Mixed-color PCB connector strips
- Direct marking
- Other versions (or variants) can be requested from WAGO Sales or configured at https://configurator.wago.com/.

Quadruple-deck PCB terminal block ▸ 738 Series

CAGE CLAMP® ▸ Actuation type: Operating tool ▸ 2.5 mm² ▸ Pin spacing: 5 mm / 0.197 inches ▸ Color: gray

1

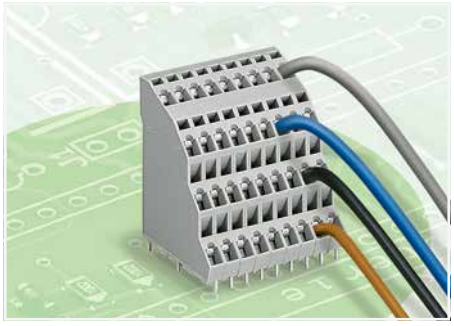

- PCB terminal strips with screwdriver-actuated CAGE CLAMP® connection
- High-density, quadruple-deck design for space-efficient wiring of multiple conductors in confined areas
- Angled conductor entry and CAGE CLAMP® actuation streamline operation
- Custom marking for all termination levels

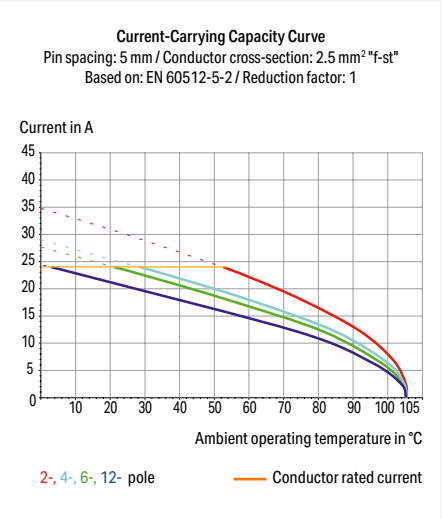

Electrical data			
Pin spacing	**5 mm / 0.197 inches**		
Ratings	**between the modules**		
Ratings per	IEC/EN 60664-1		
Overvoltage category	III	III	II
Pollution degree	3	2	2
Nominal voltage	250 V	320 V	630 V
Rated impulse withstand voltage	4 kV	4 kV	4 kV
Rated current	18 A	18 A	18 A
Ratings	**between the decks**		
Ratings per	IEC/EN 60664-1		
Overvoltage category	III	III	II
Pollution degree	3	2	2
Nominal voltage	320 V	320 V	630 V
Rated impulse withstand voltage	4 kV	4 kV	4 kV
Rated current	18 A	18 A	18 A
Approvals per	**UL 1059**		
Use group	B	C	D
Rated voltage	300 V	-	300 V
Rated current	10 A	-	10 A
Approvals per	**CSA**		
Use group	B	C	D
Rated voltage	300 V	-	300 V
Rated current	10 A	-	10 A

Connection Data	
Connection technology	CAGE CLAMP®
Strip length	5 … 6 mm / 0.2 … 0.24 inches
Conductor connection direction to PCB	45 °
Solid conductor	0.08 … 2.5 mm² / 28 … 12 AWG
Fine-stranded conductor	0.08 … 2.5 mm² / 28 … 12 AWG
Fine-stranded conductor; with insulated ferrule	0.25 … 1.5 mm²
Fine-stranded conductor; with uninsulated ferrule	0.25 … 2.5 mm²
Note (conductor cross-section)	12 AWG: THHN, THWN

Material data	
Material group	I
Insulation material (main housing)	Polyamide (PA66)
Flammability class per UL94	V0
Clamping spring material	Chrome-nickel spring steel (CrNi)
Contact material	Electrolytic copper (E_{Cu})
Contact Plating	Tin

Mechanical data	
Number of solder pins per potential	1
Solder pin length	4 mm
Solder pin dimensions	0.7 x 0.7 mm
Drilled hole diameter	1.3 $^{(+0.1)}$ mm

Environmental requirements	
Limit temperature range	-60 … +105 °C

Ferrule	Page 1081
Marking	Page 1067
Test and measurement	Page 266
Tool	Page 1072
Custom commoning	Page 272
See technical section for further information	
Approvals and corresponding ratings, visit www.wago.com	

Quadruple-deck PCB terminal block ▸ 738 Series

CAGE CLAMP® ▸ Actuation type: Operating tool ▸ 2.5 mm² ▸ Pin spacing: 5 mm / 0.197 inches ▸ Color: gray

Solder pin arrangement within the terminal block (in-line)



738-116

Pole number	Item No.	PU
8	738-102	72
12	738-103	48
16	738-104	36
24	738-106	24
32	738-108	18
48	738-112	12
64	738-116	9
96	738-124	6

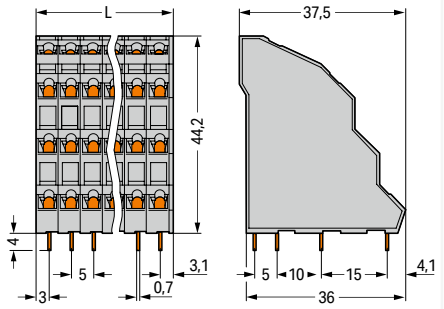

L = ((pole no. / 4) x pin spacing) + 1 mm

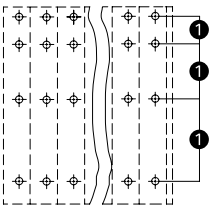

(1) Solder pins in line

Solder pin arrangement within the terminal block (staggered)

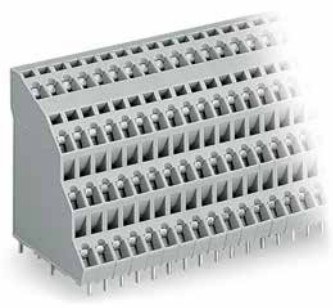

738-216

Pole number	Item No.	PU
8	738-202	72
12	738-203	48
16	738-204	36
24	738-206	24
32	738-208	18
48	738-212	12
64	738-216	9
96	738-224	6

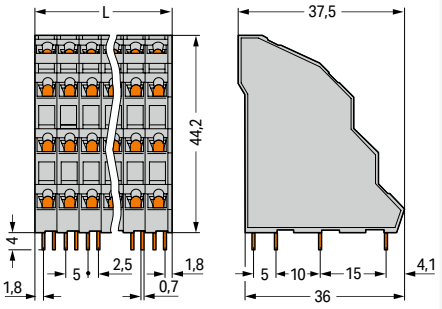

L = ((pole no. / 4) x pin spacing) + 1 mm

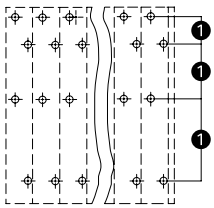

(1) Solder pins for deck 2 and 4 staggered by half the pin spacing

PU = packaging unit; SPU = subpackaging unit; Dimensions in mm

Variants:

- Other pole numbers
- Other colors
- Mixed-color PCB connector strips
- Direct marking
- Other versions (or variants) can be requested from WAGO Sales or configured at https://configurator.wago.com/.

Quadruple-deck PCB terminal block ▸ 738 Series

CAGE CLAMP® ▸ Actuation type: Operating tool ▸ 2.5 mm² ▸ Pin spacing: 5.08 mm / 0.2 inches ▸ Color: orange

1

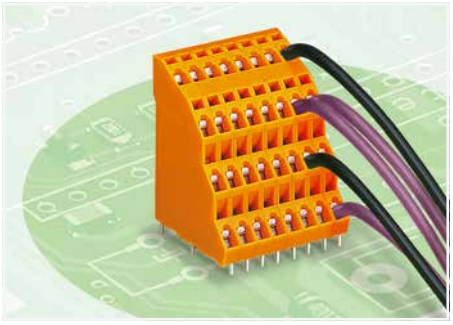

- PCB terminal strips with screwdriver-actuated CAGE CLAMP® connection
- High-density, quadruple-deck design for space-efficient wiring of multiple conductors in confined areas
- Angled conductor entry and CAGE CLAMP® actuation streamline operation
- Custom marking for all termination levels

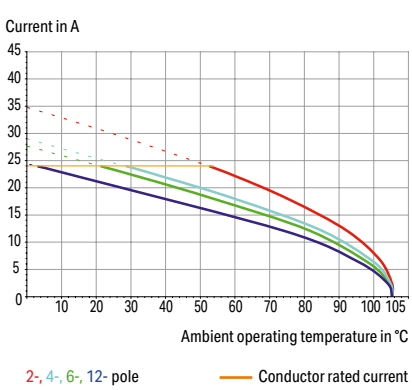

Electrical data			
Pin spacing	**5.08 mm / 0.2 inches**		
Ratings	**between the modules**		
Ratings per	IEC/EN 60664-1		
Overvoltage category	III	III	II
Pollution degree	3	2	2
Nominal voltage	250 V	320 V	630 V
Rated impulse withstand voltage	4 kV	4 kV	4 kV
Rated current	18 A	18 A	18 A
Ratings	**between the decks**		
Ratings per	IEC/EN 60664-1		
Overvoltage category	III	III	II
Pollution degree	3	2	2
Nominal voltage	320 V	320 V	630 V
Rated impulse withstand voltage	4 kV	4 kV	4 kV
Rated current	18 A	18 A	18 A
Approvals per	**UL 1059**		
Use group	B	C	D
Rated voltage	300 V	-	300 V
Rated current	10 A	-	10 A
Approvals per	**CSA**		
Use group	B	C	D
Rated voltage	300 V	-	300 V
Rated current	10 A	-	10 A

Connection Data	
Connection technology	CAGE CLAMP®
Strip length	5 … 6 mm / 0.2 … 0.24 inches
Conductor connection direction to PCB	45 °
Solid conductor	0.08 … 2.5 mm² / 28 … 12 AWG
Fine-stranded conductor	0.08 … 2.5 mm² / 28 … 12 AWG
Fine-stranded conductor; with insulated ferrule	0.25 … 1.5 mm²
Fine-stranded conductor; with uninsulated ferrule	0.25 … 2.5 mm²
Note (conductor cross-section)	12 AWG: THHN, THWN

Material data	
Material group	I
Insulation material (main housing)	Polyamide (PA66)
Flammability class per UL94	V0
Clamping spring material	Chrome-nickel spring steel (CrNi)
Contact material	Electrolytic copper (E_{Cu})
Contact Plating	Tin

Mechanical data	
Number of solder pins per potential	1
Solder pin length	4 mm
Solder pin dimensions	0.7 x 0.7 mm
Drilled hole diameter	1.3 $^{(+0.1)}$ mm

Environmental requirements	
Limit temperature range	-60 … +105 °C

Ferrule	Page 1081
Marking	Page 1067
Test and measurement	Page 266
Tool	Page 1072
Custom commoning	Page 272
See technical section for further information	
Approvals and corresponding ratings, visit www.wago.com	

Quadruple-deck PCB terminal block ▸ 738 Series

CAGE CLAMP® ▸ Actuation type: Operating tool ▸ 2.5 mm² ▸ Pin spacing: 5.08 mm / 0.2 inches ▸ Color: orange

Solder pin arrangement within the terminal block (in-line)

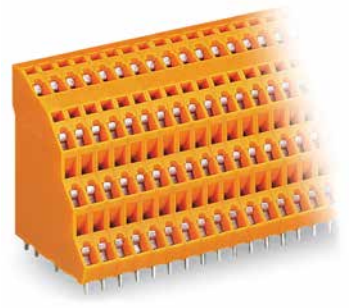

738-316

Pole number	Item No.	PU
8	738-302	69
12	738-303	48
16	738-304	36
24	738-306	24
32	738-308	18
48	738-312	12
64	738-316	9
96	738-324	6

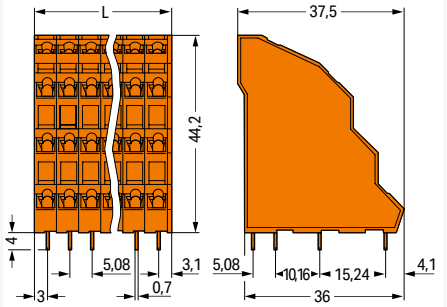

L = ((pole no. / 4) x pin spacing) + 1 mm

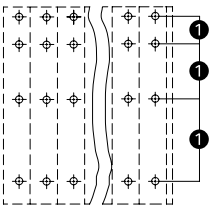

(1) Solder pins in line

Solder pin arrangement within the terminal block (staggered)

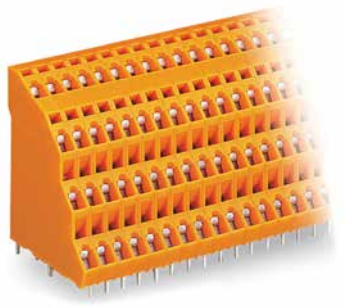

738-416

Pole number	Item No.	PU
8	738-402	69
12	738-403	48
16	738-404	36
24	738-406	24
32	738-408	18
48	738-412	12
64	738-416	9
96	738-424	6

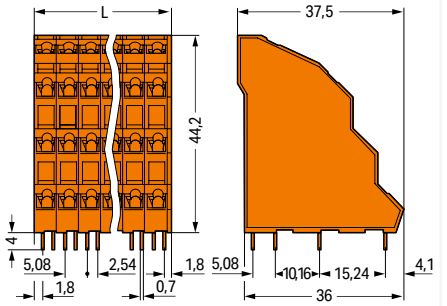

L = ((pole no. / 4) x pin spacing) + 1 mm

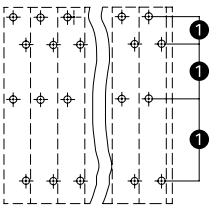

(1) Solder pins for deck 2 and 4 staggered by half the pin spacing

PU = packaging unit; SPU = subpackaging unit; Dimensions in mm

Variants:

- Other pole numbers
- Other colors
- Mixed-color PCB connector strips
- Direct marking
- Other versions (or variants) can be requested from WAGO Sales or configured at https://configurator.wago.com/.

PCB terminal block ▸ 739 Series

CAGE CLAMP® ▸ Actuation type: Operating tool ▸ 1.5 mm² ▸ Pin spacing: 3.5 mm / 0.138 inches ▸ Color: gray

1

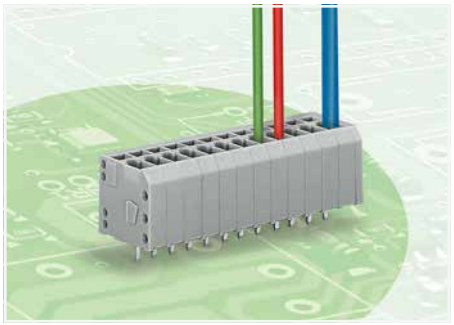

- PCB terminal strips with screwdriver-actuated CAGE CLAMP® connection
- Vertical conductor entry and operating direction for space-saving positioning/grouping

Current-Carrying Capacity Curve
Pin spacing: 3.5 mm / Conductor cross-section: 1.5 mm² "f-st"
Based on: EN 60512-5-2 / Reduction factor: 1

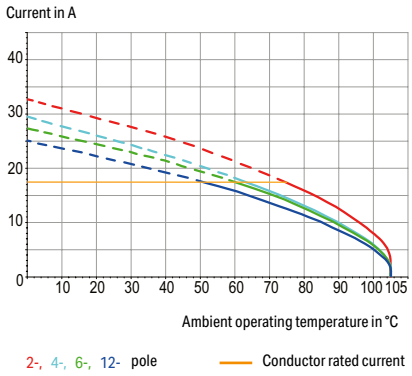

Electrical data			
Pin spacing	**3.5 mm / 0.138 inches**		
Ratings per	**IEC/EN 60664-1**		
Overvoltage category	III	III	II
Pollution degree	3	2	2
Nominal voltage	160 V	160 V	320 V
Rated impulse withstand voltage	2.5 kV	2.5 kV	2.5 kV
Rated current	17.5 A	17.5 A	17.5 A
Approvals per	**UL 1059**		
Use group	B	C	D
Rated voltage	300 V	-	300 V
Rated current	15 A	-	10 A

Connection Data	
Connection technology	CAGE CLAMP®
Strip length	5 … 6 mm / 0.2 … 0.24 inches
Conductor connection direction to PCB	90 °
Solid conductor	0.08 … 1.5 mm² / 28 … 14 AWG
Fine-stranded conductor	0.08 … 1.5 mm² / 28 … 14 AWG
Fine-stranded conductor; with insulated ferrule	0.25 … 1 mm²
Fine-stranded conductor; with uninsulated ferrule	0.25 … 1.5 mm²
Note (conductor cross-section)	14 AWG: THHN, THWN

Material data	
Material group	I
Insulation material (main housing)	Polyamide (PA66)
Flammability class per UL94	V0
Clamping spring material	Chrome-nickel spring steel (CrNi)
Contact material	Electrolytic copper (E_{Cu})
Contact Plating	Tin

Mechanical data	
Solder pin arrangement	over the entire terminal strip (in-line)
Number of solder pins per potential	1
Solder pin length	3.4 mm
Solder pin dimensions	0.6 x 0.8 mm
Drilled hole diameter	1.1 $^{(+0.1)}$ mm

Environmental requirements	
Limit temperature range	-60 … +105 °C

Ferrule	Page 1081
Marking	Page 1066
Tool	Page 1072

See technical section for further information

Approvals and corresponding ratings, visit www.wago.com

PCB terminal block ▸ 739 Series

CAGE CLAMP® ▸ Actuation type: Operating tool ▸ 1.5 mm² ▸ Pin spacing: 3.5 mm / 0.138 inches ▸ Color: gray



739-312

Pole number	Item No.	PU (SPU)
2	739-302	560 (140)
3	739-303	400 (100)
4	739-304	300 (75)
5	739-305	240 (60)
6	739-306	200 (50)
7	739-307	180 (45)
8	739-308	160 (40)
9	739-309	140 (35)
10	739-310	120 (30)
12	739-312	100 (25)

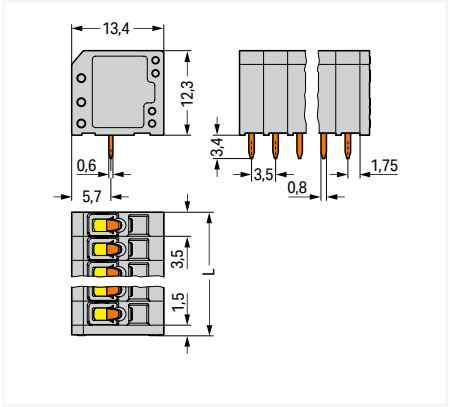

L = (pole no. x pin spacing) + 1.5 mm

Mounting type: Mounting flange



739-306/001-000

Pole number	Item No.	PU (SPU)
2	739-302/001-000	200 (50)
3	739-303/001-000	180 (45)
4	739-304/001-000	140 (35)
5	739-305/001-000	140 (35)
6	739-306/001-000	120 (30)
7	739-307/001-000	180 (45)
8	739-308/001-000	100 (25)
9	739-309/001-000	80 (20)
10	739-310/001-000	80 (20)
12	739-312/001-000	80 (20)

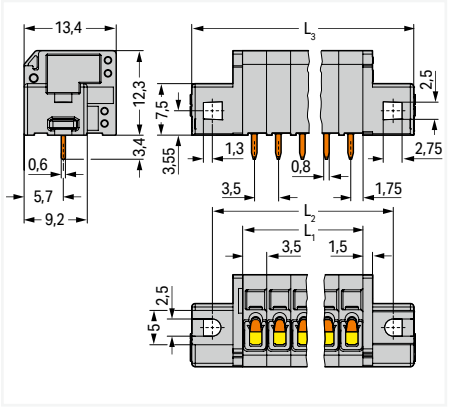

L_1 = pole no. x pin spacing
$L_2 = L_1 + 8.8$ mm
$L_3 = L_1 + 14.8$ mm

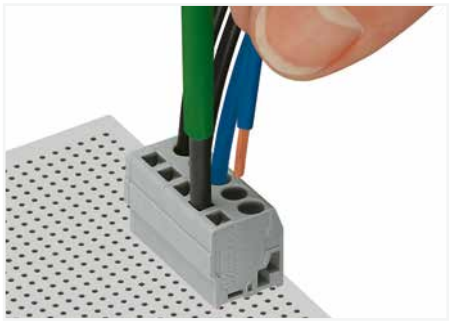

Inserting a conductor parallel to screwdriver actuation – 739 Series.

PU = packaging unit; SPU = subpackaging unit; Dimensions in mm

Variants:

- Other pole numbers
- Other colors
- Mixed-color PCB connector strips
- Direct marking
- Other versions (or variants) can be requested from WAGO Sales or configured at https://configurator.wago.com/.

PCB terminal block ▸ 739 Series

CAGE CLAMP® ▸ Actuation type: Operating tool ▸ 1.5 mm² ▸ Pin spacing: 3.81 mm / 0.15 inches ▸ Color: orange

1

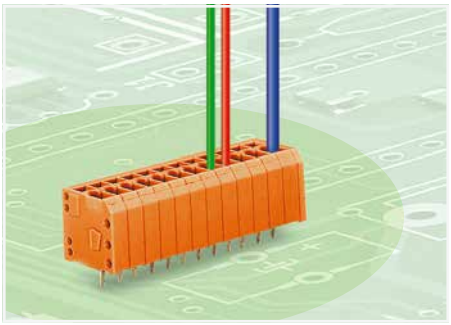

- PCB terminal strips with screwdriver-actuated CAGE CLAMP® connection
- Vertical conductor entry and operating direction for space-saving positioning/grouping

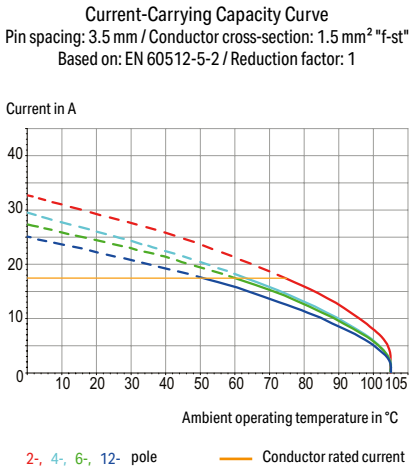

Electrical data			
Pin spacing	**3.81 mm / 0.15 inches**		
Ratings per	**IEC/EN 60664-1**		
Overvoltage category	III	III	II
Pollution degree	3	2	2
Nominal voltage	200 V	320 V	500 V
Rated impulse withstand voltage	4 kV	4 kV	4 kV
Rated current	17.5 A	17.5 A	17.5 A
Approvals per	**UL 1059**		
Use group	B	C	D
Rated voltage	300 V	-	300 V
Rated current	15 A	-	10 A

Connection Data	
Connection technology	CAGE CLAMP®
Strip length	5 … 6 mm / 0.2 … 0.24 inches
Conductor connection direction to PCB	90 °
Solid conductor	0.08 … 1.5 mm² / 28 … 14 AWG
Fine-stranded conductor	0.08 … 1.5 mm² / 28 … 14 AWG
Fine-stranded conductor; with insulated ferrule	0.25 … 1 mm²
Fine-stranded conductor; with uninsulated ferrule	0.25 … 1.5 mm²
Note (conductor cross-section)	14 AWG: THHN, THWN

Material data	
Material group	I
Insulation material (main housing)	Polyamide (PA66)
Flammability class per UL94	V0
Clamping spring material	Chrome-nickel spring steel (CrNi)
Contact material	Electrolytic copper (E_{Cu})
Contact Plating	Tin

Mechanical data	
Solder pin arrangement	over the entire terminal strip (in-line)
Number of solder pins per potential	1
Solder pin length	3.4 mm
Solder pin dimensions	0.6 x 0.8 mm
Drilled hole diameter	1.1 $^{(+0.1)}$ mm

Environmental requirements	
Limit temperature range	-60 … +105 °C

Ferrule	Page 1081
Marking	Page 1066
Tool	Page 1072
See technical section for further information	
Approvals and corresponding ratings, visit www.wago.com	

PCB terminal block ▸ 739 Series

CAGE CLAMP® ▸ Actuation type: Operating tool ▸ 1.5 mm² ▸ Pin spacing: 3.81 mm / 0.15 inches ▸ Color: orange

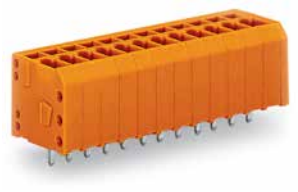

739-342

Pole number	Item No.	PU (SPU)
2	739-332	520 (130)
3	739-333	360 (90)
4	739-334	280 (70)
5	739-335	220 (55)
6	739-336	180 (45)
7	739-337	160 (40)
8	739-338	140 (35)
9	739-339	120 (30)
10	739-340	120 (30)
12	739-342	100 (25)

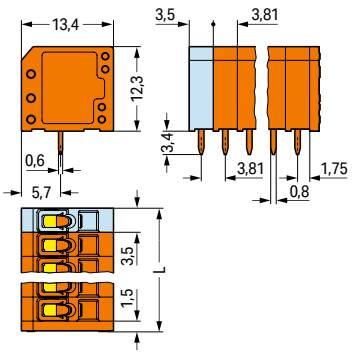

L = (pole no. – 1) x pin spacing + 3.5 mm + 1.5 mm

Mounting type: Mounting flange



739-336/001-000

Pole number	Item No.	PU (SPU)
2	739-332/001-000	200 (50)
3	739-333/001-000	180 (45)
4	739-334/001-000	140 (35)
5	739-335/001-000	140 (35)
6	739-336/001-000	120 (30)
7	739-337/001-000	180 (45)
8	739-338/001-000	100 (25)
9	739-339/001-000	80 (20)
10	739-340/001-000	80 (20)
12	739-342/001-000	60 (15)

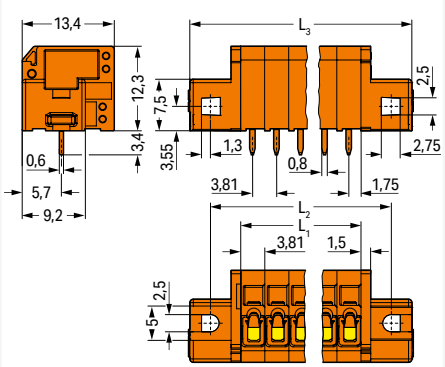

L_1 = pole no. x pin spacing
$L_2 = L_1 + 8.8$ mm
$L_3 = L_1 + 14.8$ mm

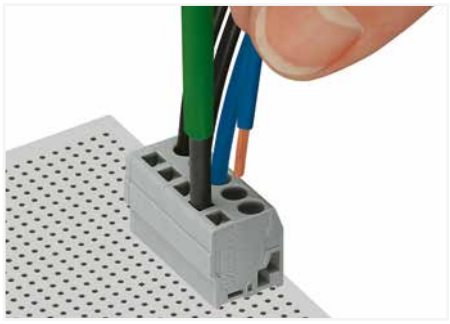

Inserting a conductor parallel to screwdriver actuation – 739 Series.

PU = packaging unit; SPU = subpackaging unit; Dimensions in mm

Variants:

- Other pole numbers
- Other colors
- Mixed-color PCB connector strips
- Direct marking
- Other versions (or variants) can be requested from WAGO Sales or configured at https://configurator.wago.com/.

PCB terminal block ▸ 739 Series

CAGE CLAMP® ▸ Actuation type: Operating tool ▸ 2.5 mm² ▸ Pin spacing: 5 mm / 0.197 inches ▸ Color: gray

1

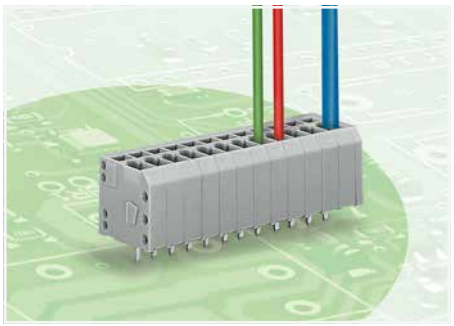

- PCB terminal strips with screwdriver-actuated CAGE CLAMP® connection
- Vertical conductor entry and operating direction for space-saving positioning/grouping

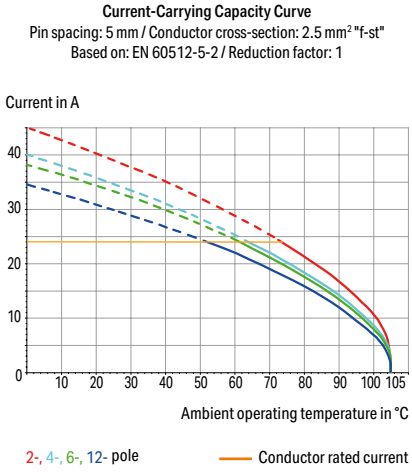

Electrical data			
Pin spacing	**5 mm / 0.197 inches**		
Ratings per	**IEC/EN 60664-1**		
Overvoltage category	III	III	II
Pollution degree	3	2	2
Nominal voltage	320 V	320 V	630 V
Rated impulse withstand voltage	4 kV	4 kV	4 kV
Rated current	24 A	24 A	24 A
Approvals per	**UL 1059**		
Use group	B	C	D
Rated voltage	300 V	-	300 V
Rated current	20 A	-	10 A
Approvals per	**CSA**		
Use group	B	C	D
Rated voltage	300 V	-	300 V
Rated current	12 A	-	10 A

Connection Data	
Connection technology	CAGE CLAMP®
Strip length	8 … 9 mm / 0.31 … 0.35 inches
Conductor connection direction to PCB	90 °
Solid conductor	0.08 … 2.5 mm² / 28 … 14 AWG
Fine-stranded conductor	0.08 … 2.5 mm² / 28 … 12 AWG
Fine-stranded conductor; with insulated ferrule	0.25 … 1.5 mm²
Fine-stranded conductor; with uninsulated ferrule	0.25 … 2.5 mm²
Note (conductor cross-section)	12 AWG: THHN, THWN

Material data	
Material group	I
Insulation material (main housing)	Polyamide (PA66)
Flammability class per UL94	V0
Clamping spring material	Chrome-nickel spring steel (CrNi)
Contact material	Electrolytic copper (E_{Cu})
Contact Plating	Tin

Mechanical data	
Solder pin arrangement	over the entire terminal strip (in-line)
Number of solder pins per potential	1
Solder pin length	3.2 mm
Solder pin dimensions	0.8 x 1.2 mm
Drilled hole diameter	1.6 $^{(+0.1)}$ mm

Environmental requirements	
Limit temperature range	-60 … +105 °C

Ferrule	Page 1081
Marking	Page 1067
Tool	Page 1072
See technical section for further information	
Approvals and corresponding ratings, visit www.wago.com	

PCB terminal block ▸ 739 Series

CAGE CLAMP® ▸ Actuation type: Operating tool ▸ 2.5 mm² ▸ Pin spacing: 5 mm / 0.197 inches ▸ Color: gray



739-112

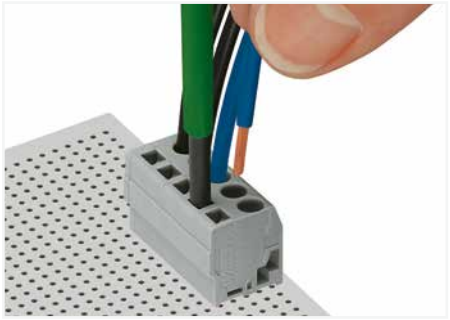

Inserting a conductor parallel to screwdriver actuation – 739 Series.

Pole number	Item No.	PU (SPU)
2	739-102	400 (100)
3	739-103	280 (70)
4	739-104	220 (55)
5	739-105	180 (45)
6	739-106	140 (35)
7	739-107	120 (30)
8	739-108	100 (25)
9	739-109	100 (25)
10	739-110	80 (20)
12	739-112	60 (15)
16	739-116	40 (10)
24	739-124	20 (5)

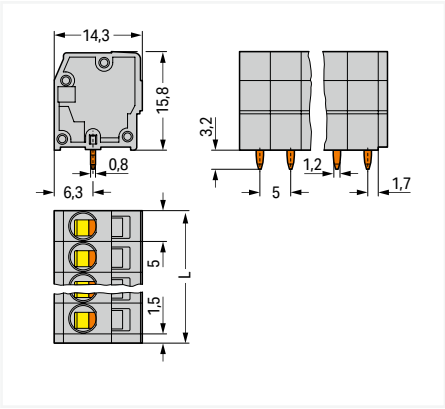

L = (pole no. – 1) x pin spacing + 5 mm + 1.5 mm

PU = packaging unit; SPU = subpackaging unit; Dimensions in mm

Variants:

- Other pole numbers
- Other colors
- Mixed-color PCB connector strips
- Direct marking
- Other versions (or variants) can be requested from WAGO Sales or configured at https://configurator.wago.com/.

PCB terminal block ▸ 739 Series

CAGE CLAMP® ▸ Actuation type: Operating tool ▸ 2.5 mm² ▸ Pin spacing: 5.08 mm / 0.2 inches ▸ Color: orange

1

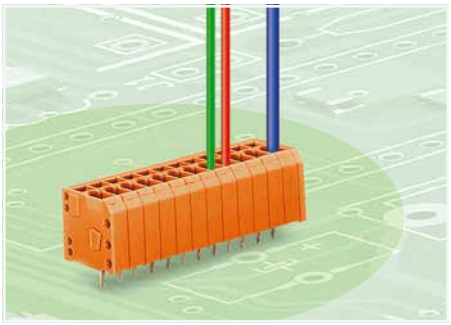

- PCB terminal strips with screwdriver-actuated CAGE CLAMP® connection
- Vertical conductor entry and operating direction for space-saving positioning/grouping

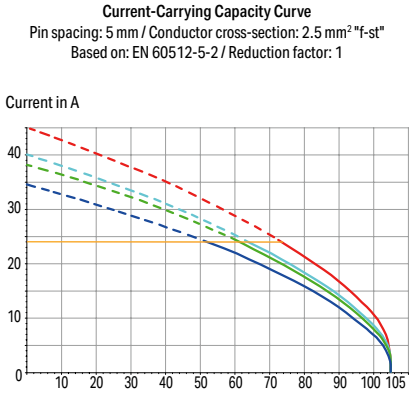

Electrical data			
Pin spacing	**5.08 mm / 0.2 inches**		
Ratings per	**IEC/EN 60664-1**		
Overvoltage category	III	III	II
Pollution degree	3	2	2
Nominal voltage	320 V	320 V	630 V
Rated impulse withstand voltage	4 kV	4 kV	4 kV
Rated current	24 A	24 A	24 A
Approvals per	**UL 1059**		
Use group	B	C	D
Rated voltage	300 V	-	300 V
Rated current	20 A	-	10 A
Approvals per	**CSA**		
Use group	B	C	D
Rated voltage	300 V	-	300 V
Rated current	12 A	-	10 A

Connection Data	
Connection technology	CAGE CLAMP®
Strip length	8 … 9 mm / 0.31 … 0.35 inches
Conductor connection direction to PCB	90 °
Solid conductor	0.08 … 2.5 mm² / 28 … 14 AWG
Fine-stranded conductor	0.08 … 2.5 mm² / 28 … 12 AWG
Fine-stranded conductor; with insulated ferrule	0.25 … 1.5 mm²
Fine-stranded conductor; with uninsulated ferrule	0.25 … 2.5 mm²
Note (conductor cross-section)	12 AWG: THHN, THWN

Material data	
Material group	I
Insulation material (main housing)	Polyamide (PA66)
Flammability class per UL94	V0
Clamping spring material	Chrome-nickel spring steel (CrNi)
Contact material	Electrolytic copper (E_{Cu})
Contact Plating	Tin

Mechanical data	
Solder pin arrangement	over the entire terminal strip (in-line)
Number of solder pins per potential	1
Solder pin length	3.2 mm
Solder pin dimensions	0.8 x 1.2 mm
Drilled hole diameter	1.6 $^{(+0.1)}$ mm

Environmental requirements	
Limit temperature range	-60 … +105 °C

Ferrule	Page 1081
Marking	Page 1067
Tool	Page 1072
See technical section for further information	
Approvals and corresponding ratings, visit www.wago.com	

PCB terminal block ▸ 739 Series

CAGE CLAMP® ▸ Actuation type: Operating tool ▸ 2.5 mm² ▸ Pin spacing: 5.08 mm / 0.2 inches ▸ Color: orange

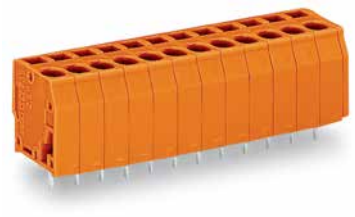

739-162

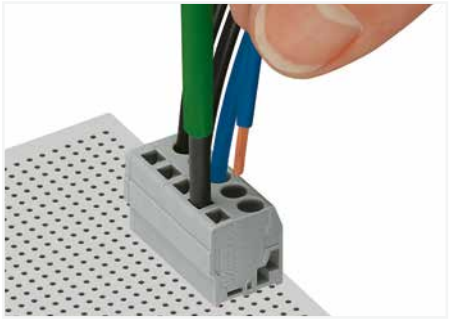

Inserting a conductor parallel to screwdriver actuation – 739 Series.

Pole number	Item No.	PU (SPU)
2	**739-152**	400 (100)
3	**739-153**	280 (70)
4	**739-154**	220 (55)
5	**739-155**	160 (40)
6	**739-156**	140 (35)
7	**739-157**	120 (30)
8	**739-158**	100 (25)
9	**739-159**	100 (25)
10	**739-160**	80 (20)
12	**739-162**	60 (15)
16	**739-166**	40 (10)
24	**739-174**	20 (5)

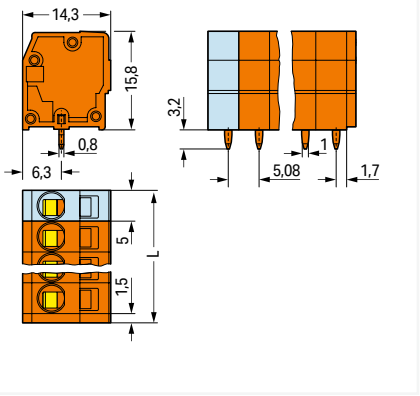

L = (pole no. – 1) x pin spacing + 5 mm + 1.5 mm

PU = packaging unit; SPU = subpackaging unit; Dimensions in mm

Variants:
- Other pole numbers
- Other colors
- Mixed-color PCB connector strips
- Direct marking
- Other versions (or variants) can be requested from WAGO Sales or configured at https://configurator.wago.com/.

PCB terminal block ▸ 739 Series

CAGE CLAMP® ▸ Actuation type: Operating tool ▸ 2.5 mm² ▸ Pin spacing: 7.5 mm / 0.295 inches ▸ Color: gray

1

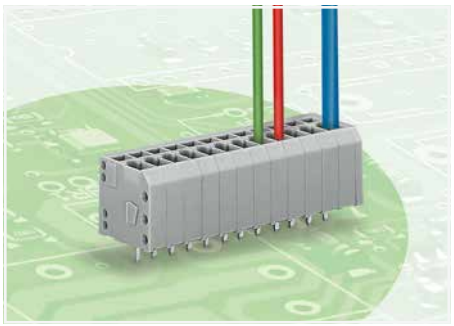

- PCB terminal strips with screwdriver-actuated CAGE CLAMP® connection
- Vertical conductor entry and operating direction for space-saving positioning/grouping

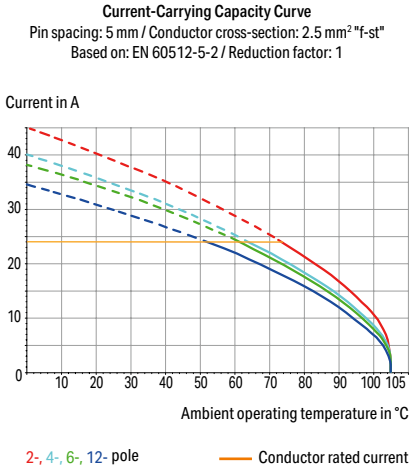

Electrical data			
Pin spacing	**7.5 mm / 0.295 inches**		
Ratings per	**IEC/EN 60664-1**		
Overvoltage category	III	III	II
Pollution degree	3	2	2
Nominal voltage	500 V	630 V	1000 V
Rated impulse withstand voltage	6 kV	6 kV	6 kV
Rated current	24 A	24 A	24 A
Approvals per	**UL 1059**		
Use group	B	C	D
Rated voltage	300 V	-	300 V
Rated current	20 A	-	10 A
Approvals per	**CSA**		
Use group	B	C	D
Rated voltage	300 V	-	300 V
Rated current	8 A	-	8 A

Connection Data	
Connection technology	CAGE CLAMP®
Strip length	8 … 9 mm / 0.31 … 0.35 inches
Conductor connection direction to PCB	90 °
Solid conductor	0.08 … 2.5 mm² / 28 … 12 AWG
Fine-stranded conductor	0.08 … 2.5 mm² / 28 … 12 AWG
Fine-stranded conductor; with insulated ferrule	0.25 … 1.5 mm²
Fine-stranded conductor; with uninsulated ferrule	0.25 … 2.5 mm²
Note (conductor cross-section)	12 AWG: THHN, THWN

Material data	
Material group	I
Insulation material (main housing)	Polyamide (PA66)
Flammability class per UL94	V0
Clamping spring material	Chrome-nickel spring steel (CrNi)
Contact material	Electrolytic copper (E_{Cu})
Contact Plating	Tin

Mechanical data	
Solder pin arrangement	over the entire terminal strip (in-line)
Number of solder pins per potential	1
Solder pin length	3.2 mm
Solder pin dimensions	0.8 x 1.2 mm
Drilled hole diameter	1.6 $^{(+0.1)}$ mm

Environmental requirements	
Limit temperature range	-60 … +105 °C

Ferrule	Page 1081
Marking	Page 1067
Tool	Page 1072
See technical section for further information	
Approvals and corresponding ratings, visit www.wago.com	

PCB terminal block ▸ 739 Series

CAGE CLAMP® ▸ Actuation type: Operating tool ▸ 2.5 mm² ▸ Pin spacing: 7.5 mm / 0.295 inches ▸ Color: gray



739-209

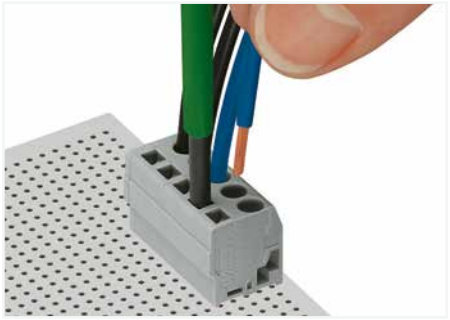

Inserting a conductor parallel to screwdriver actuation – 739 Series.

Pole number	Item No.	PU (SPU)
2	**739-202**	340 (85)
3	**739-203**	220 (55)
4	**739-204**	160 (40)
5	**739-205**	120 (30)
6	**739-206**	100 (25)
7	**739-207**	80 (20)
8	**739-208**	80 (20)
9	**739-209**	60 (15)
10	**739-210**	60 (15)
12	**739-212**	40 (10)

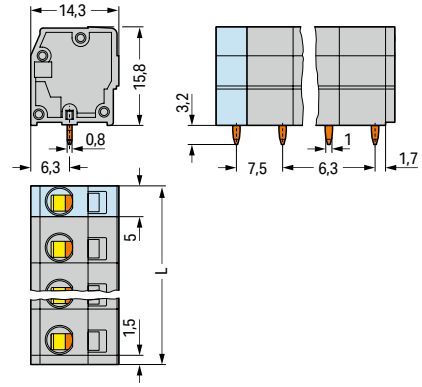

L = (pole no. – 1) x pin spacing + 5 mm + 1.5 mm

PU = packaging unit; SPU = subpackaging unit; Dimensions in mm

Variants:

- Other pole numbers
- Other colors
- Mixed-color PCB connector strips
- Direct marking
- Other versions (or variants) can be requested from WAGO Sales or configured at https://configurator.wago.com/.

PCB terminal block ▸ 739 Series

CAGE CLAMP® ▸ Actuation type: Operating tool ▸ 2.5 mm² ▸ Pin spacing: 7.62 mm / 0.3 inches ▸ Color: orange

1

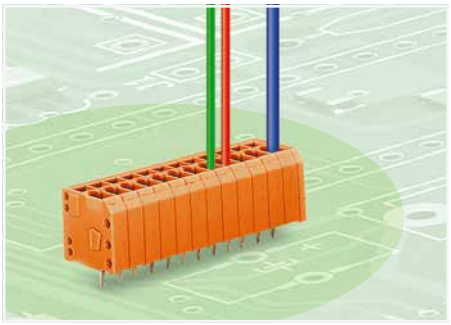

- PCB terminal strips with screwdriver-actuated CAGE CLAMP® connection
- Vertical conductor entry and operating direction for space-saving positioning/grouping

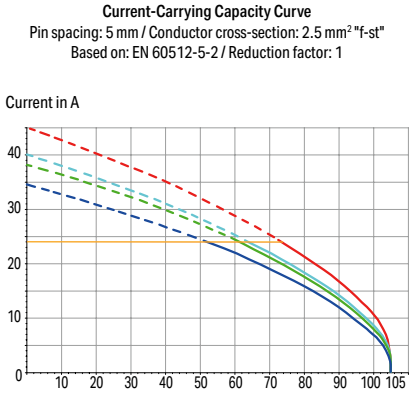

Electrical data			
Pin spacing	**7.62 mm / 0.3 inches**		
Ratings per	**IEC/EN 60664-1**		
Overvoltage category	III	III	II
Pollution degree	3	2	2
Nominal voltage	500 V	630 V	1000 V
Rated impulse withstand voltage	6 kV	6 kV	6 kV
Rated current	24 A	24 A	24 A
Approvals per	**UL 1059**		
Use group	B	C	D
Rated voltage	300 V	-	300 V
Rated current	20 A	-	10 A
Approvals per	**CSA**		
Use group	B	C	D
Rated voltage	300 V	-	300 V
Rated current	8 A	-	8 A

Connection Data	
Connection technology	CAGE CLAMP®
Strip length	8 … 9 mm / 0.31 … 0.35 inches
Conductor connection direction to PCB	90 °
Solid conductor	0.08 … 2.5 mm² / 28 … 12 AWG
Fine-stranded conductor	0.08 … 2.5 mm² / 28 … 12 AWG
Fine-stranded conductor; with insulated ferrule	0.25 … 1.5 mm²
Fine-stranded conductor; with uninsulated ferrule	0.25 … 2.5 mm²
Note (conductor cross-section)	12 AWG: THHN, THWN

Material data	
Material group	I
Insulation material (main housing)	Polyamide (PA66)
Flammability class per UL94	V0
Clamping spring material	Chrome-nickel spring steel (CrNi)
Contact material	Electrolytic copper (E_{Cu})
Contact Plating	Tin

Mechanical data	
Solder pin arrangement	over the entire terminal strip (in-line)
Number of solder pins per potential	1
Solder pin length	3.2 mm
Solder pin dimensions	0.8 x 1.2 mm
Drilled hole diameter	1.6 $^{(+0.1)}$ mm

Environmental requirements	
Limit temperature range	-60 … +105 °C

Ferrule	Page 1081
Marking	Page 1067
Tool	Page 1072
See technical section for further information	
Approvals and corresponding ratings, visit www.wago.com	

PCB terminal block ▸ 739 Series

CAGE CLAMP® ▸ Actuation type: Operating tool ▸ 2.5 mm² ▸ Pin spacing: 7.62 mm / 0.3 inches ▸ Color: orange

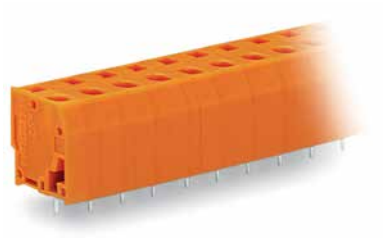

739-239

Pole number	Item No.	PU (SPU)
2	739-232	320 (80)
3	739-233	220 (55)
4	739-234	160 (40)
5	739-235	120 (30)
6	739-236	100 (25)
7	739-237	80 (20)
8	739-238	80 (20)
9	739-239	60 (15)
10	739-240	60 (15)
12	739-242	40 (10)

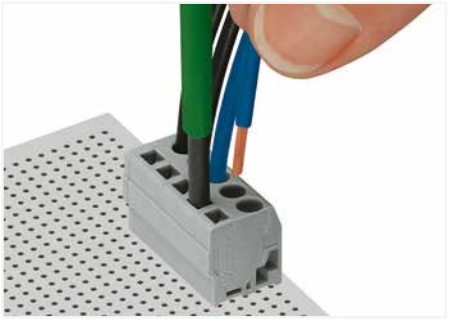

Inserting a conductor parallel to screwdriver actuation – 739 Series.

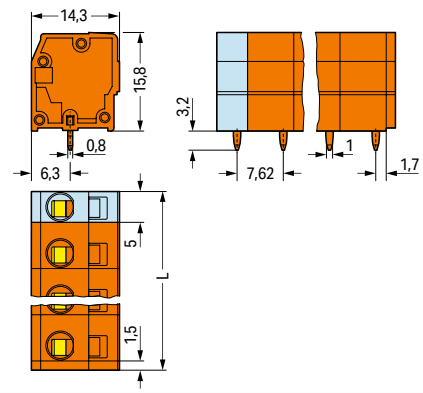

L = (pole no. – 1) x pin spacing + 5 mm + 1.5 mm

PU = packaging unit; SPU = subpackaging unit; Dimensions in mm

Variants:

- Other pole numbers
- Other colors
- Mixed-color PCB connector strips
- Direct marking
- Other versions (or variants) can be requested from WAGO Sales or configured at https://configurator.wago.com/.

PCB terminal block ▸ 739 Series

CAGE CLAMP® ▸ Actuation type: Operating tool ▸ 2.5 mm² ▸ Pin spacing: 10 mm / 0.394 inches ▸ Color: gray

1

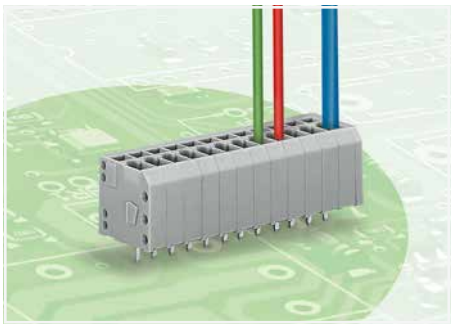

- PCB terminal strips with screwdriver-actuated CAGE CLAMP® connection
- Vertical conductor entry and operating direction for space-saving positioning/grouping

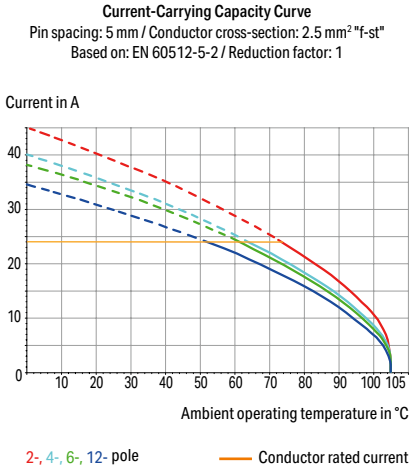

Electrical data			
Pin spacing	**10 mm / 0.394 inches**		
Ratings per	**IEC/EN 60664-1**		
Overvoltage category	III	III	II
Pollution degree	3	2	2
Nominal voltage	1000 V	1000 V	1000 V
Rated impulse withstand voltage	8 kV	8 kV	8 kV
Rated current	24 A	24 A	24 A
Approvals per	**UL 1059**		
Use group	B	C	D
Rated voltage	300 V	300 V	600 V
Rated current	20 A	12 A	5 A
Approvals per	**CSA**		
Use group	B	C	D
Rated voltage	300 V	300 V	600 V
Rated current	12 A	12 A	5 A

Connection Data	
Connection technology	CAGE CLAMP®
Strip length	8 … 9 mm / 0.31 … 0.35 inches
Conductor connection direction to PCB	90 °
Solid conductor	0.08 … 2.5 mm² / 28 … 12 AWG
Fine-stranded conductor	0.08 … 2.5 mm² / 28 … 12 AWG
Fine-stranded conductor; with insulated ferrule	0.25 … 1.5 mm²
Fine-stranded conductor; with uninsulated ferrule	0.25 … 2.5 mm²
Note (conductor cross-section)	12 AWG: THHN, THWN

Material data	
Material group	I
Insulation material (main housing)	Polyamide (PA66)
Flammability class per UL94	V0
Clamping spring material	Chrome-nickel spring steel (CrNi)
Contact material	Electrolytic copper (E_{Cu})
Contact Plating	Tin

Mechanical data	
Solder pin arrangement	over the entire terminal strip (in-line)
Number of solder pins per potential	1
Solder pin length	3.2 mm
Solder pin dimensions	0.8 x 1 mm
Drilled hole diameter	1.6 $^{(+0.1)}$ mm

Environmental requirements	
Limit temperature range	-60 … +105 °C

Ferrule	Page 1081
Marking	Page 1068
Tool	Page 1072

See technical section for further information

Approvals and corresponding ratings, visit www.wago.com

PCB terminal block ▸ 739 Series

CAGE CLAMP® ▸ Actuation type: Operating tool ▸ 2.5 mm² ▸ Pin spacing: 10 mm / 0.394 inches ▸ Color: gray



739-3205

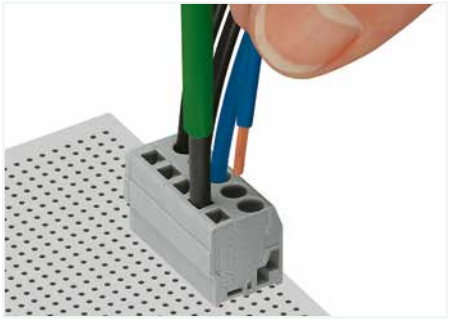

Inserting a conductor parallel to screwdriver actuation – 739 Series.

Pole number	Item No.	PU (SPU)
2	**739-3202**	280 (70)
3	**739-3203**	180 (45)
4	**739-3204**	120 (30)
5	**739-3205**	100 (25)
6	**739-3206**	80 (20)
7	**739-3207**	60 (15)
8	**739-3208**	60 (15)
9	**739-3209**	40 (10)
10	**739-3210**	40 (10)
12	**739-3212**	40 (10)

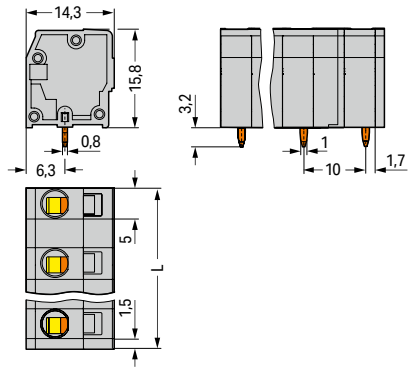

L = (pole no. – 1) x pin spacing + 5 mm + 1.5 mm

PU = packaging unit; SPU = subpackaging unit; Dimensions in mm

Variants:

- Other pole numbers
- Other colors
- Mixed-color PCB connector strips
- Direct marking
- Other versions (or variants) can be requested from WAGO Sales or configured at https://configurator.wago.com/.

PCB terminal block ▸ 740 Series

CAGE CLAMP® ▸ Actuation type: Operating tool ▸ 2.5 mm² ▸ Pin spacing: 5 mm / 0.197 inches

1

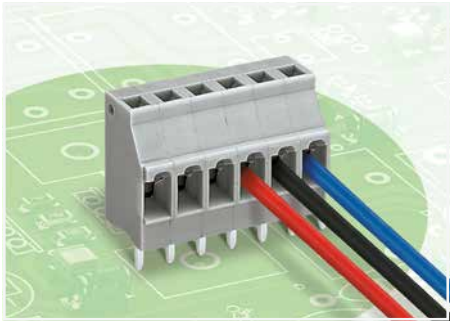

- PCB terminal strips with screwdriver-actuated CAGE CLAMP® connection
- Top-of-unit actuation
- Pin spacing and dimensions compatible with screw-type terminal blocks of a similar design
- PCB terminal strips may be positioned adjacently without losing any poles

Electrical data				
Pin spacing	**5 mm / 0.197 inches**			
Ratings per	**IEC/EN 60664-1**			
Overvoltage category	III	III	II	
Pollution degree	3	2	2	
Nominal voltage	300 V	320 V	630 V	
Rated impulse withstand voltage	4 kV	4 kV	4 kV	
Rated current	16 A	16 A	16 A	
Approvals per	**UL 1059**			
Use group	B	C	D	
Rated voltage	300 V	-	300 V	
Rated current	10 A	-	10 A	
Approvals per	**CSA**			
Use group	B	C	D	
Rated voltage	300 V	-	300 V	
Rated current	16 A	-	10 A	

Connection Data	
Connection technology	CAGE CLAMP®
Strip length	6 … 7 mm / 0.24 … 0.28 inches
Conductor connection direction to PCB	0 °
Solid conductor	0.08 … 2.5 mm² / 28 … 12 AWG
Fine-stranded conductor	0.08 … 2.5 mm² / 28 … 12 AWG
Fine-stranded conductor; with insulated ferrule	0.25 … 1.5 mm²
Fine-stranded conductor; with uninsulated ferrule	0.25 … 1.5 mm²
Note (conductor cross-section)	12 AWG: THHN, THWN

Material data	
Material group	I
Insulation material (main housing)	Polyamide (PA66)
Flammability class per UL94	V0
Clamping spring material	Chrome-nickel spring steel (CrNi)
Contact material	Electrolytic copper (E_{Cu})
Contact Plating	Tin

Mechanical data	
Solder pin arrangement	over the entire terminal strip (in-line)
Number of solder pins per potential	1
Solder pin length	5.1 mm
Solder pin dimensions	0.8 x 1 mm
Drilled hole diameter	1.3 $^{(+0.1)}$ mm

Environmental requirements	
Limit temperature range	-60 … +105 °C

Ferrule	Page 1081
Marking	Page 1067
Tool	Page 1072
See technical section for further information	
Approvals and corresponding ratings, visit www.wago.com	

PCB terminal block ▸ 740 Series

CAGE CLAMP® ▸ Actuation type: Operating tool ▸ 2.5 mm² ▸ Pin spacing: 5 mm / 0.197 inches

Color: gray

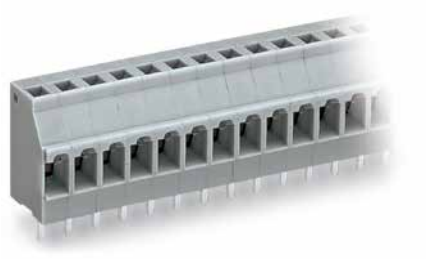

740-112

Pole number	Item No.	PU (SPU)
2	740-102	460 (115)
3	740-103	300 (75)
4	740-104	240 (60)
5	740-105	180 (45)
6	740-106	140 (35)
7	740-107	120 (30)
8	740-108	100 (25)
9	740-109	100 (25)
10	740-110	80 (20)
12	740-112	60 (15)
16	740-116	60 (15)
24	740-124	40 (10)

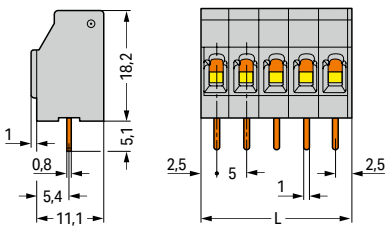

L = pole no. x pin spacing

Color: blue

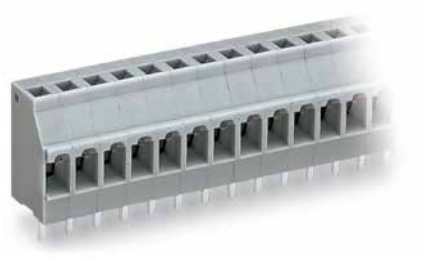

740-112

Color	Pole number	Item No.	PU (SPU)
blue	12	740-112/000-006	60 (15)

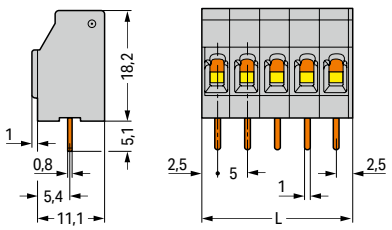

L = pole no. x pin spacing

PU = packaging unit; SPU = subpackaging unit; Dimensions in mm

Variants:

- Other pole numbers
- Other colors
- Mixed-color PCB connector strips
- Direct marking
- Other versions (or variants) can be requested from WAGO Sales or configured at https://configurator.wago.com/.

218 Series
Description and Installation

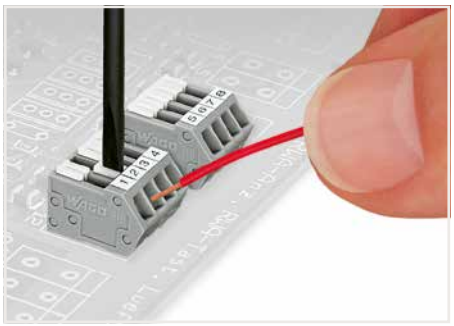

Terminating stranded conductors in confined spaces requires a great deal of patience, unless you use the new 218 Series PCB Terminal Strips. The clamping units of these strips can be held open during termination process via integrated locking slide.

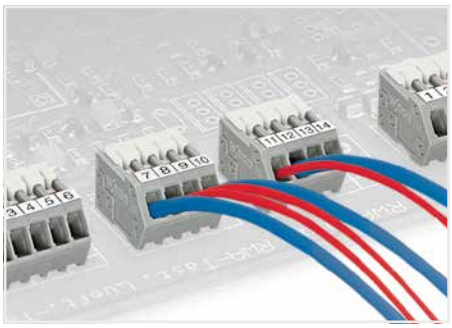

Terminating 0.75 mm² (18 AWG) conductors is possible; however, insulation diameter allows only every other clamping unit to be terminated with this conductor size.

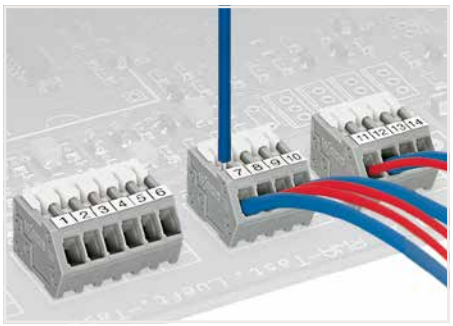

Testing directly on the clamping spring.

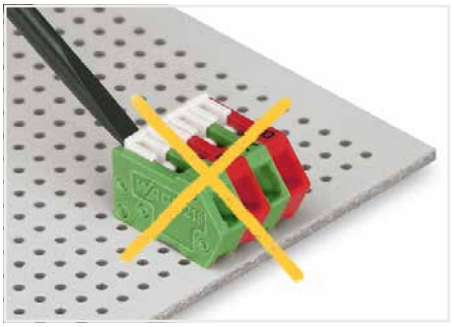

Incorrect – do not operate the locking slides from the back.

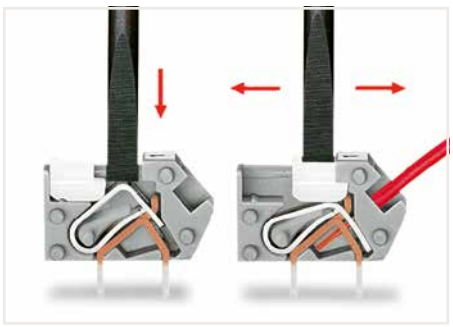

Conductor termination: To momentarily open the clamping unit, use screwdriver and then insert a stripped conductor. To open clamping unit for an extended period, move locking slide toward conductor entry hole. Then fully insert stripped conductor and move locking slide back to original position (also possible to perform with fingernail).

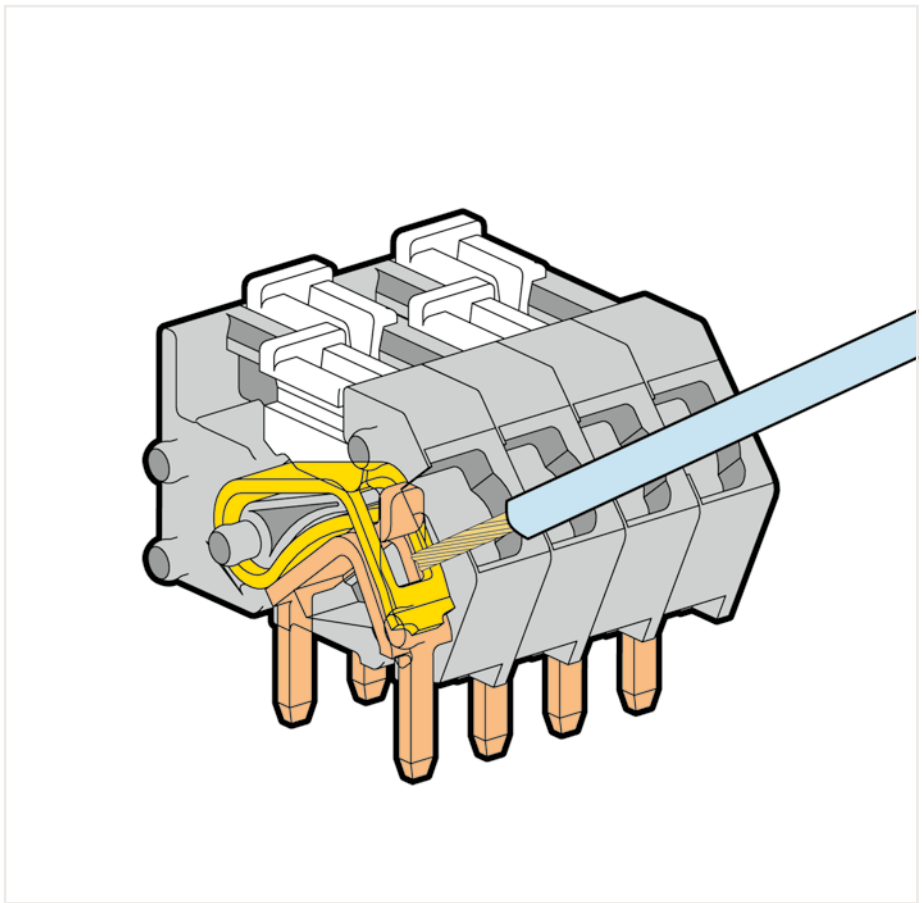

218 Series



Insulating housings are available in different colors.



Labeling with self-adhesive marking strips.

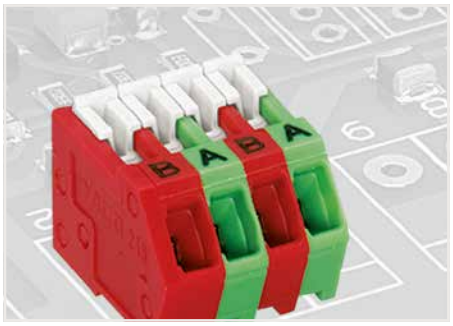

Labeling via factory direct marking.

PCB terminal block ▸ 218 Series

CAGE CLAMP® ▸ Actuation type: Slider ▸ 0.5 mm² ▸ Color: gray

1

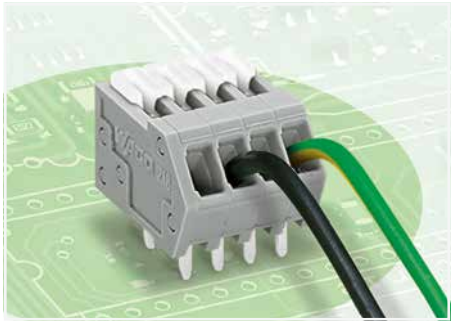

- Terminal strips are just 8.1 mm tall and feature an innovative, locking slide-actuated CAGE CLAMP® .
- Several clamping units can be held open simultaneously.
- Easily terminate stranded conductors in tight spaces (e.g., bus connectors).

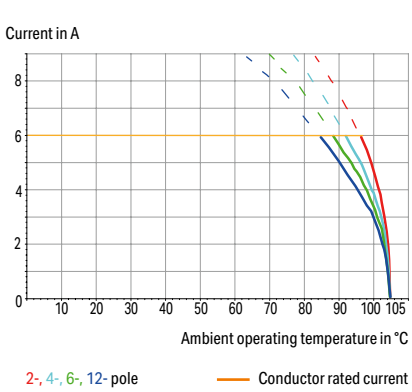

Electrical data			
Pin spacing	**2.5 mm / 0.098 inches; 2.54 mm / 0.1 inches**		
Ratings per	**IEC/EN 60664-1**		
Overvoltage category	III	III	II
Pollution degree	3	2	2
Nominal voltage	80 V	160 V	320 V
Rated impulse withstand voltage	2.5 kV	2.5 kV	2.5 kV
Rated current	6 A	6 A	6 A
Approvals per	**UL 1059**		
Use group	B	C	D
Rated voltage	150 V	-	-
Rated current	4 A	-	-
Approvals per	**CSA**		
Use group	B	C	D
Rated voltage	150 V	-	-
Rated current	4 A	-	-

Connection Data	
Connection technology	CAGE CLAMP®
Strip length	5 … 6 mm / 0.2 … 0.24 inches
Conductor connection direction to PCB	40 °
Solid conductor	0.08 … 0.5 mm² / 28 … 20 AWG
Fine-stranded conductor	0.08 … 0.5 mm² / 28 … 20 AWG
Fine-stranded conductor; with insulated ferrule	0.25 mm²
Fine-stranded conductor; with uninsulated ferrule	0.25 mm²
Note (conductor cross-section)	Terminating 0.75 mm²/18 AWG conductors is possible; however insulation diameter allows only every other clamping unit to be terminated with this conductor size.

Material data	
Material group	I
Insulation material (main housing)	Polyamide (PA66)
Flammability class per UL94	V0
Clamping spring material	Chrome-nickel spring steel (CrNi)
Contact material	Electrolytic copper (E_{Cu})
Contact Plating	Tin

Mechanical data	
Solder pin arrangement	over the entire terminal strip (in-line)
Number of solder pins per potential	2
Solder pin length	2.8 mm
Solder pin dimensions	0.5 x 0.75 mm
Drilled hole diameter	1.1 $^{(+0.1)}$ mm

Environmental requirements	
Limit temperature range	-60 … +105 °C

Ferrule	Page 1081
Marking	Page 1066
Test and measurement	Page 1088
Tool	Page 1072
See technical section for further information	
Approvals and corresponding ratings, visit www.wago.com	

PCB terminal block ▸ 218 Series

CAGE CLAMP® ▸ Actuation type: Slider ▸ 0.5 mm² ▸ Color: gray

Pin spacing: 2.5 mm / 0.098 inches



218-104

Pole number	Item No.	PU (SPU)
2	218-102	760 (190)
3	218-103	540 (135)
4	218-104	420 (105)
5	218-105	340 (85)
6	218-106	280 (70)
7	218-107	240 (60)
8	218-108	220 (55)
9	218-109	200 (50)
10	218-110	180 (45)
11	218-111	160 (40)
12	218-112	140 (35)
13	218-113	140 (35)
14	218-114	120 (30)
15	218-115	120 (30)
16	218-116	100 (25)
17	218-117	100 (25)
18	218-118	100 (25)
19	218-119	80 (20)
20	218-120	80 (20)
21	218-121	80 (20)
22	218-122	80 (20)
23	218-123	80 (20)
24	218-124	60 (15)

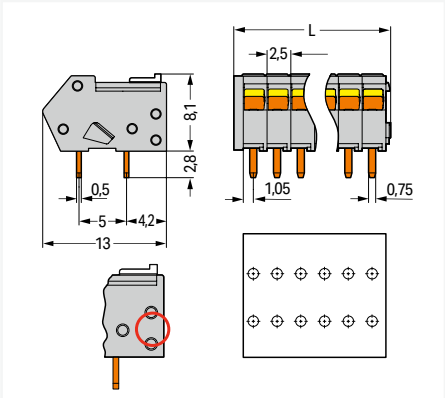

L = (pole no. x pin spacing) + 1.5 mm

Pin spacing: 2.54 mm / 0.1 inches



218-504

Pole number	Item No.	PU (SPU)
2	218-502	1000 (100)
3	218-503	1000 (100)
4	218-504	500 (100)
5	218-505	500 (100)
6	218-506	280 (70)
7	218-507	240 (60)
8	218-508	220 (55)
9	218-509	180 (45)
10	218-510	160 (40)
11	218-511	160 (40)
12	218-512	140 (35)
13	218-513	140 (35)
14	218-514	120 (30)
15	218-515	120 (30)
16	218-516	100 (25)
17	218-517	100 (25)
18	218-518	100 (25)
19	218-519	80 (20)
20	218-520	80 (20)
21	218-521	80 (20)
22	218-522	80 (20)
23	218-523	80 (20)
24	218-524	60 (15)

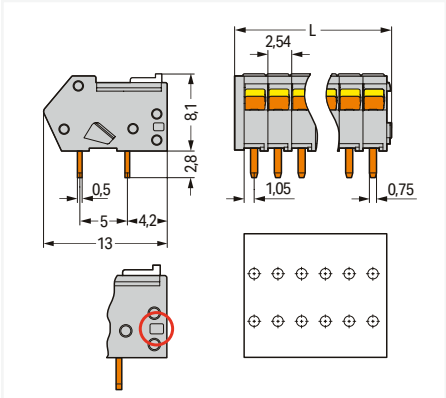

L = (pole no. x pin spacing) + 1.5 mm
A groove at the back of the terminal strip indicates the 2.54 mm pin spacing (red circle).

PU = packaging unit; SPU = subpackaging unit; Dimensions in mm

Variants:

- Other pole numbers
- Other colors
- Mixed-color PCB connector strips
- Direct marking
- Other versions (or variants) can be requested from WAGO Sales or configured at https://configurator.wago.com/.

233 and 234 Series
Description and Installation

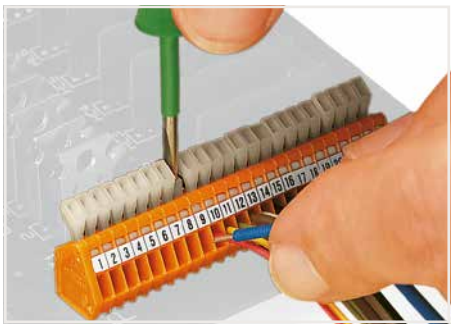

Inserting/removing a conductor.



Nominal cross-section: 0.5 mm² (20 AWG);
0.75 mm² (18 AWG) only in every other position



Labeling via factory direct marking or self-adhesive marking strips.

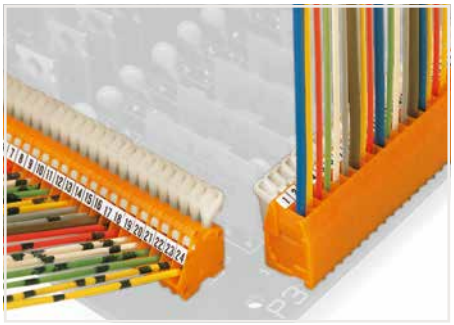

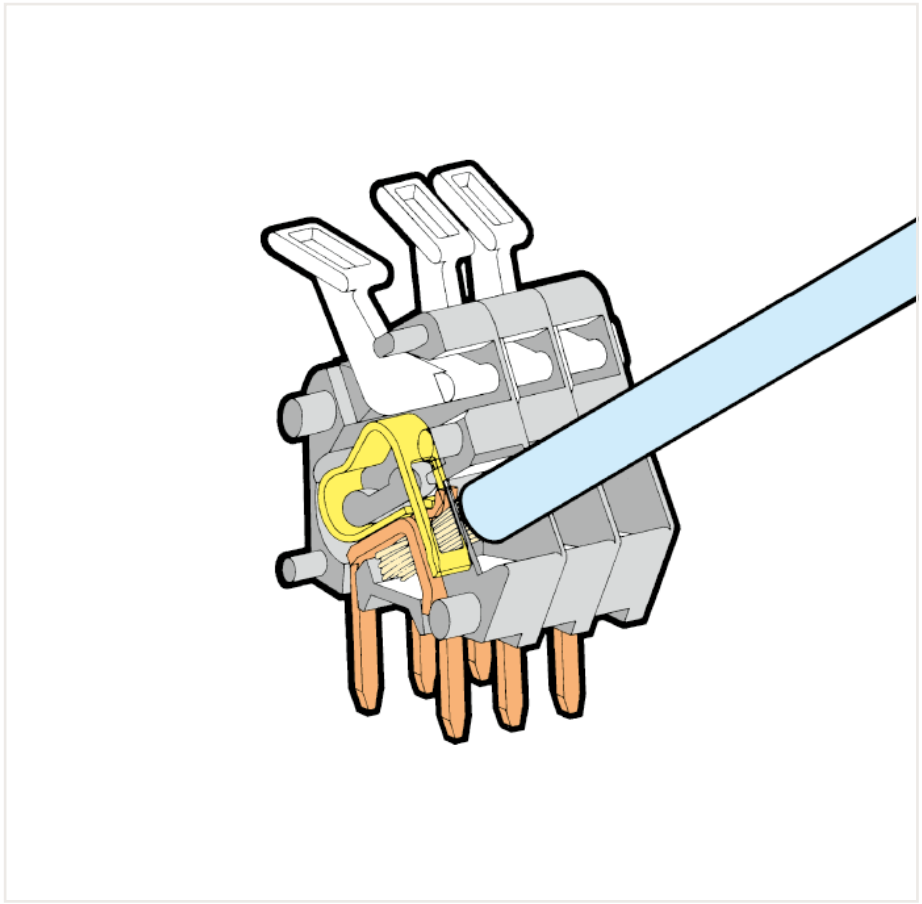

233 Series

234 Series
Description and Installation



Inserting/removing a conductor.



Nominal cross-section: 0.5 mm² (20 AWG);
0.75 mm² (18 AWG) only in every other position



Labeling via self-adhesive marking strips or factory direct marking.

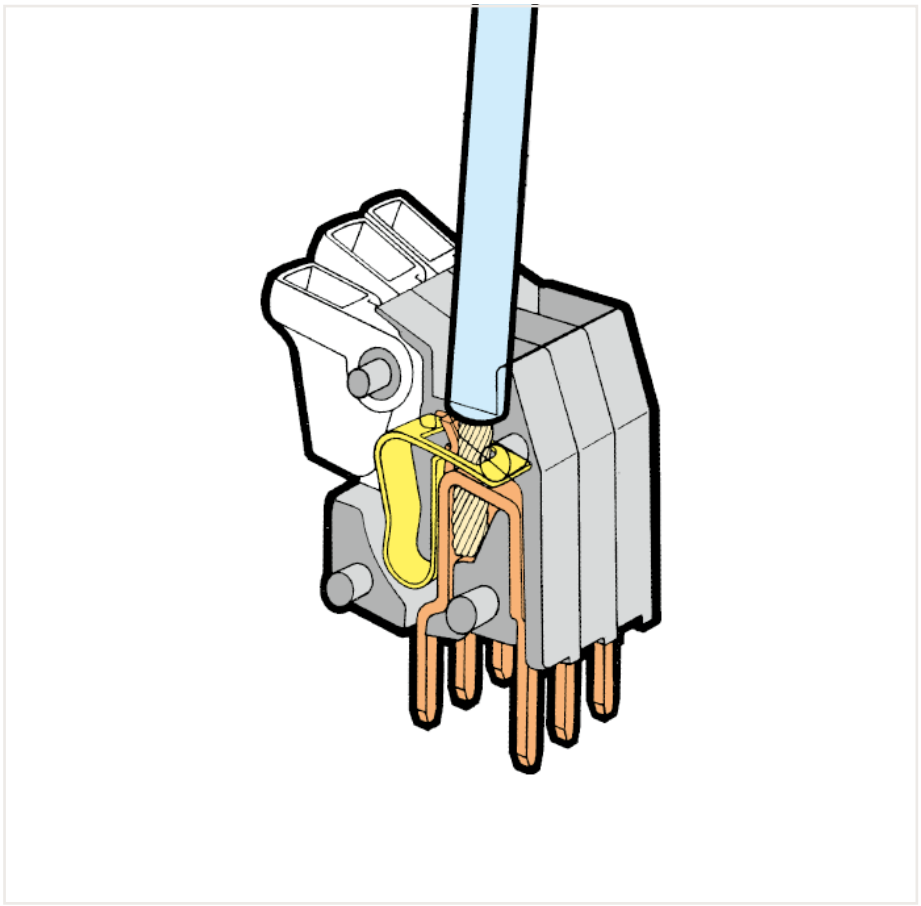

234 Series

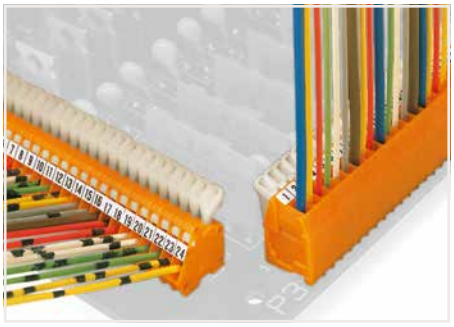

PCB terminal block ▸ 233 Series

CAGE CLAMP® ▸ Actuation type: Push-button ▸ 0.5 mm²

1



- PCB terminal strips with push-buttons and CAGE CLAMP® connection
- Double solder pins for high mechanical stability on PCB
- Ideal for in-the-field wiring thanks to simplified push-button actuation
- Convenient, tool-free operation

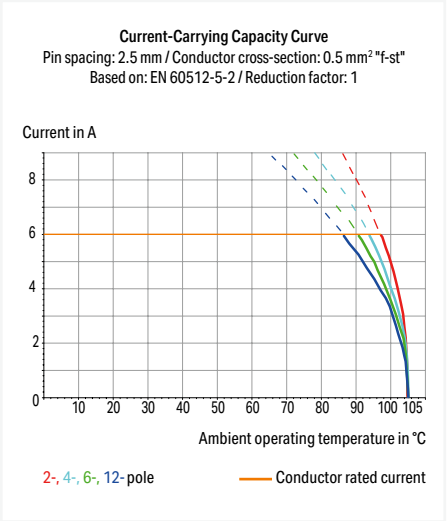

Electrical data			
Pin spacing	**2.5 mm / 0.098 inches; 2.54 mm / 0.1 inches**		
Ratings per	**IEC/EN 60664-1**		
Overvoltage category	III	III	II
Pollution degree	3	2	2
Nominal voltage	63 V	160 V	320 V
Rated impulse withstand voltage	2.5 kV	2.5 kV	2.5 kV
Rated current	6 A	6 A	6 A
Approvals per	**UL 1059**		
Use group	B	C	D
Rated voltage	150 V	-	-
Rated current	4 A	-	-
Approvals per	**CSA**		
Use group	B	C	D
Rated voltage	150 V	-	-
Rated current	4 A	-	-

Connection Data	
Connection technology	CAGE CLAMP®
Strip length	5 … 6 mm / 0.2 … 0.24 inches
Conductor connection direction to PCB	30 °
Solid conductor	0.08 … 0.5 mm² / 28 … 20 AWG
Fine-stranded conductor	0.08 … 0.5 mm² / 28 … 20 AWG
Fine-stranded conductor; with insulated ferrule	0.25 mm²
Fine-stranded conductor; with uninsulated ferrule	0.25 mm²
Note (conductor cross-section)	Terminating 0.75 mm²/18 AWG conductors is possible; however insulation diameter allows only every other clamping unit to be terminated with this conductor size.

Material data	
Material group	I
Insulation material (main housing)	Polyamide (PA66)
Flammability class per UL94	V0
Clamping spring material	Chrome-nickel spring steel (CrNi)
Contact material	Electrolytic copper (E_{Cu})
Contact Plating	Tin

Mechanical data	
Solder pin arrangement	over the entire terminal strip (in-line)
Number of solder pins per potential	2
Solder pin length	4 mm
Solder pin dimensions	0.5 x 0.75 mm
Drilled hole diameter	1.1 $^{(+0.1)}$ mm

Environmental requirements	
Limit temperature range	-60 … +105 °C

Ferrule	Page 1081
Marking	Page 1066
Tool	Page 1072
See technical section for further information	
Approvals and corresponding ratings, visit www.wago.com	

PCB terminal block ▸ 233 Series

CAGE CLAMP® ▸ Actuation type: Push-button ▸ 0.5 mm²

Pin spacing: 2.5 mm / 0.098 inches ▸ Color: gray



233-216

Pole number	Item No.	PU (SPU)
2	233-202	600 (100)
3	233-203	500 (125)
4	233-204	400 (100)
5	233-205	340 (85)
6	233-206	280 (70)
7	233-207	240 (60)
8	233-208	220 (55)
9	233-209	200 (50)
10	233-210	180 (45)
12	233-212	140 (35)

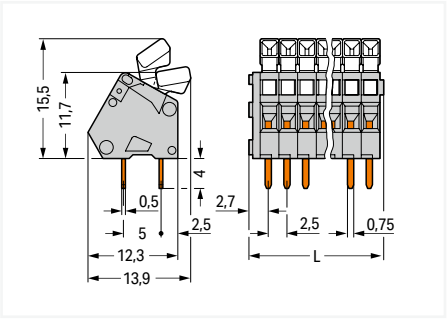

L = (pole no. x pin spacing) + 2.3 mm

Pin spacing: 2.54 mm / 0.1 inches ▸ Color: orange



233-516

Pole number	Item No.	PU (SPU)
2	233-502	600 (100)
3	233-503	500 (125)
4	233-504	400 (100)
5	233-505	340 (85)
6	233-506	280 (70)
7	233-507	240 (60)
8	233-508	220 (55)
9	233-509	200 (50)
10	233-510	180 (45)
12	233-512	140 (35)

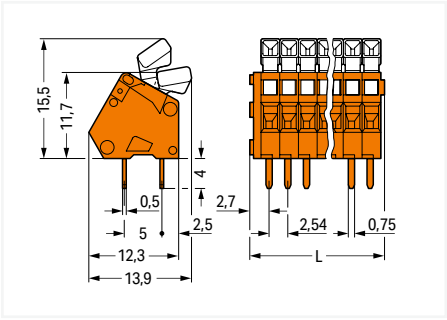

L = (pole no. x pin spacing) + 2.3 mm

PU = packaging unit; SPU = subpackaging unit; Dimensions in mm

Variants:

- Other pole numbers
- Other colors
- Mixed-color PCB connector strips
- Direct marking
- Other versions (or variants) can be requested from WAGO Sales or configured at https://configurator.wago.com/.

PCB terminal block ▸ 234 Series

CAGE CLAMP® ▸ Actuation type: Push-button ▸ 0.5 mm²

1

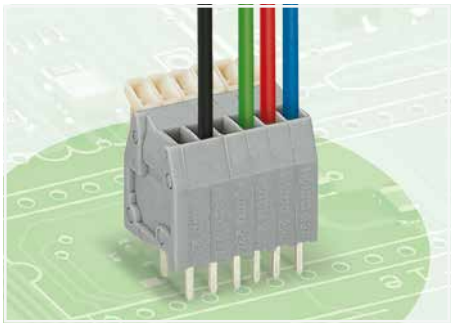

- PCB terminal strips with push-buttons and CAGE CLAMP® connection
- Double solder pins for high mechanical stability on PCB
- Ideal for in-the-field wiring thanks to simplified push-button actuation
- Convenient, tool-free operation

Current-Carrying Capacity Curve
Pin spacing: 2.5 mm / Conductor cross-section: 0.5 mm² "f-st"
Based on: EN 60512-5-2 / Reduction factor: 1

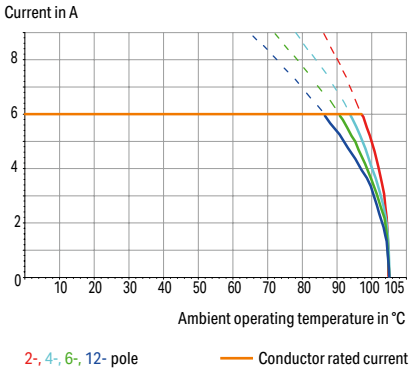

Electrical data			
Pin spacing	**2.5 mm / 0.098 inches; 2.54 mm / 0.1 inches**		
Ratings per	**IEC/EN 60664-1**		
Overvoltage category	III	III	II
Pollution degree	3	2	2
Nominal voltage	63 V	160 V	320 V
Rated impulse withstand voltage	2.5 kV	2.5 kV	2.5 kV
Rated current	6 A	6 A	6 A
Approvals per	**UL 1059**		
Use group	B	C	D
Rated voltage	150 V	-	-
Rated current	4 A	-	-
Approvals per	**CSA**		
Use group	B	C	D
Rated voltage	150 V	-	-
Rated current	4 A	-	-

Connection Data	
Connection technology	CAGE CLAMP®
Strip length	5 … 6 mm / 0.2 … 0.24 inches
Conductor connection direction to PCB	90 °
Solid conductor	0.08 … 0.5 mm² / 28 … 20 AWG
Fine-stranded conductor	0.08 … 0.5 mm² / 28 … 20 AWG
Fine-stranded conductor; with insulated ferrule	0.25 mm²
Fine-stranded conductor; with uninsulated ferrule	0.25 mm²

Material data	
Material group	I
Insulation material (main housing)	Polyamide (PA66)
Flammability class per UL94	V0
Clamping spring material	Chrome-nickel spring steel (CrNi)
Contact material	Electrolytic copper (E_{Cu})
Contact Plating	Tin

Mechanical data	
Solder pin arrangement	over the entire terminal strip (in-line)
Number of solder pins per potential	2
Solder pin length	4 mm
Solder pin dimensions	0.5 x 0.75 mm
Drilled hole diameter	1.1 $^{(+0.1)}$ mm

Environmental requirements	
Limit temperature range	-60 … +105 °C

Ferrule	Page 1081
Marking	Page 1066
Tool	Page 1072
See technical section for further information	
Approvals and corresponding ratings, visit www.wago.com	

PCB terminal block ▸ 234 Series

CAGE CLAMP® ▸ Actuation type: Push-button ▸ 0.5 mm²

Pin spacing: 2.5 mm / 0.098 inches ▸ Color: gray

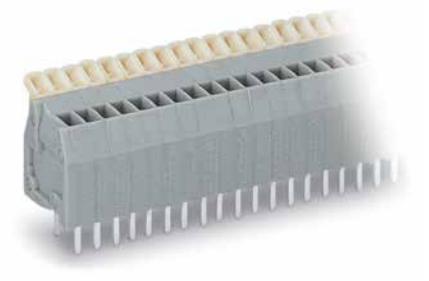

234-216

Pole number	Item No.	PU (SPU)
2	234-202	600 (100)
3	234-203	520 (130)
4	234-204	400 (100)
5	234-205	340 (85)
6	234-206	280 (70)
7	234-207	240 (60)
8	234-208	220 (55)
9	234-209	200 (50)
10	234-210	180 (45)
12	234-212	140 (35)

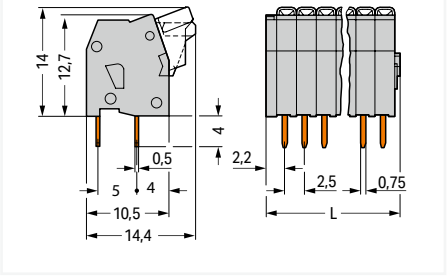

L = (pole no. x pin spacing) + 2.2 mm

Pin spacing: 2.54 mm / 0.1 inches ▸ Color: orange

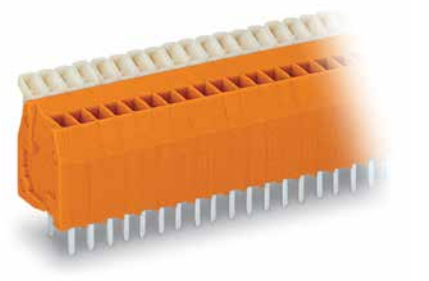

234-516

Pole number	Item No.	PU (SPU)
2	234-502	600 (100)
3	234-503	520 (130)
4	234-504	400 (100)
5	234-505	340 (85)
6	234-506	280 (70)
7	234-507	240 (60)
8	234-508	220 (55)
9	234-509	200 (50)
10	234-510	180 (45)
12	234-512	140 (35)

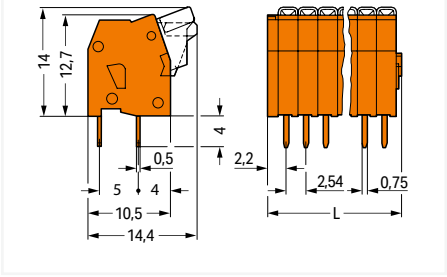

L = (pole no. x pin spacing) + 2.2 mm

PU = packaging unit; SPU = subpackaging unit; Dimensions in mm

Variants:

- Other pole numbers
- Other colors
- Mixed-color PCB connector strips
- Direct marking
- Other versions (or variants) can be requested from WAGO Sales or configured at https://configurator.wago.com/.

255, 256 and 257 Series
Description and Installation


Inserting/removing a conductor – 256 Series.

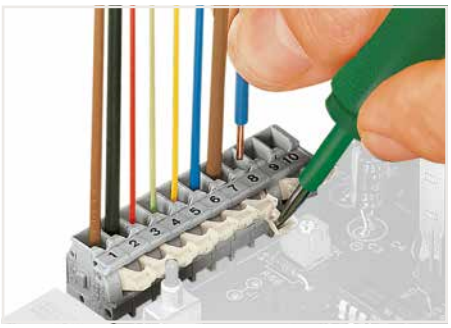
Inserting/removing a conductor – 255 Series.

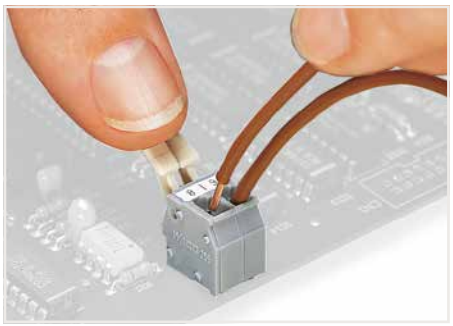
Inserting/removing a conductor via finger-operated lever – 255 Series.

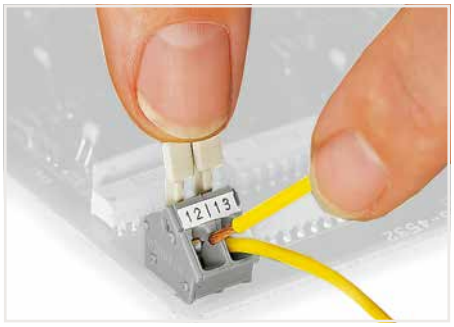
Inserting/removing a conductor via finger-operated lever – 256 Series.

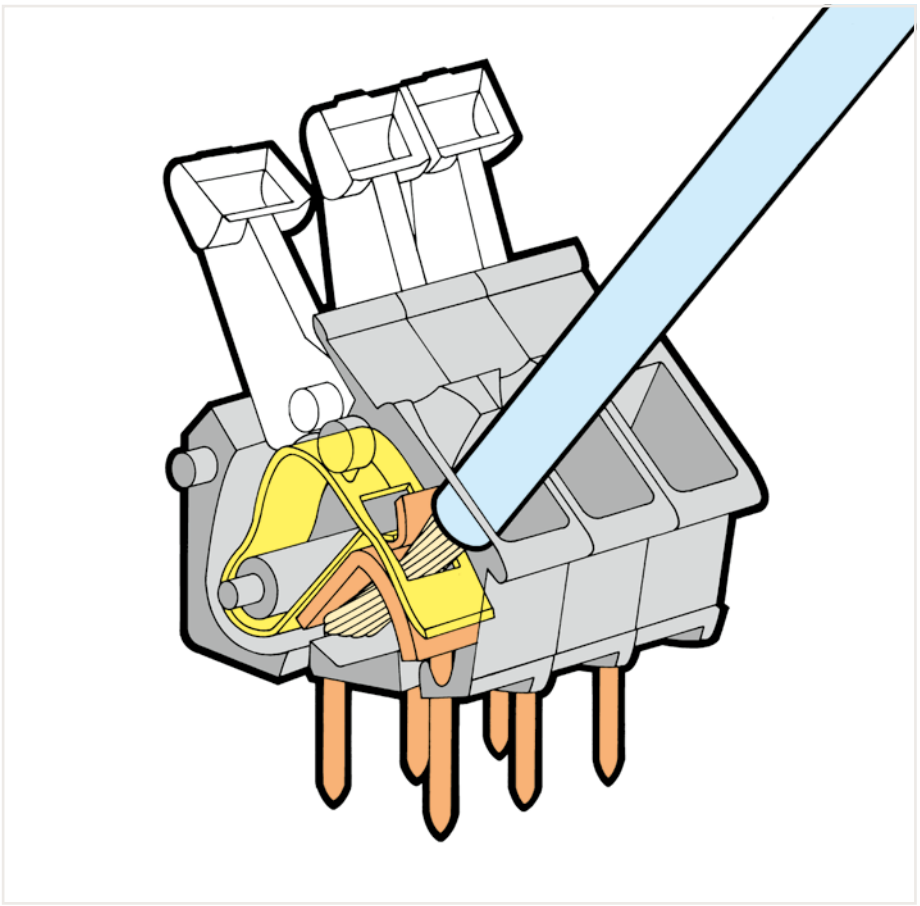
255, 256 and 257 Series


Possible conductor arrangement with terminal strips staggered (for 256 Series only).


Formation of groups using housings of different colors.

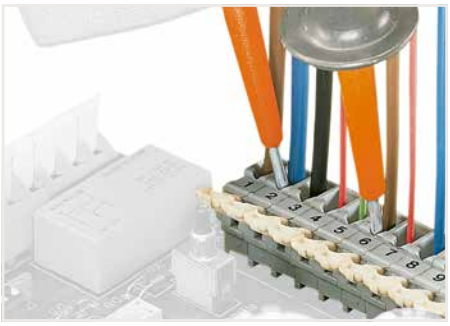
Testing with test probes.


Testing with test plug modules.

Stackable PCB terminal block ▸ 255 Series

CAGE CLAMP® ▸ Actuation type: Push-button ▸ 2.5 mm²

1

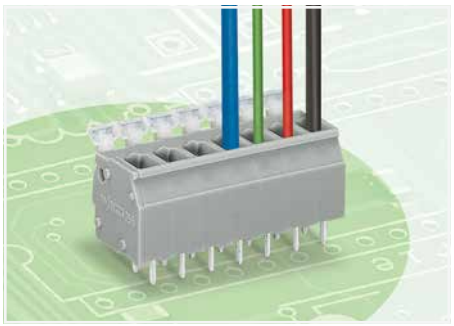

- PCB terminal blocks with push-buttons and CAGE CLAMP® connection
- Versions with Ex approval
- Set to metric or inch pin spacing by compressing PCB terminal strips or pulling them apart
- Ideal for in-the-field wiring thanks to simplified push-button actuation
- Convenient, tool-free operation

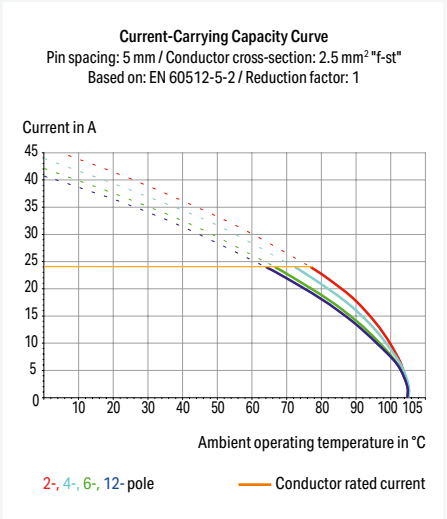

Electrical data									
Pin spacing	**5/5.08 mm / 0.197/0.2 inches**			**7.5/7.62 mm / 0.295/0.3 inches**			**10/10.16 mm / 0.394/0.4 inches**		
Ratings per	**IEC/EN 60664-1**			**IEC/EN 60664-1**			**IEC/EN 60664-1**		
Overvoltage category	III	III	II	III	III	II	III	III	II
Pollution degree	3	2	2	3	2	2	3	2	2
Nominal voltage	320 V	320 V	630 V	500 V	630 V	1000 V	630 V	1000 V	1000 V
Rated impulse withstand voltage	4 kV	4 kV	4 kV	6 kV	6 kV	6 kV	8 kV	8 kV	8 kV
Rated current	24 A	24 A	24 A	24 A	24 A	24 A	24 A	24 A	24 A
Approvals per	**UL 1059**			**UL 1059**			**UL 1059**		
Use group	B	C	D	B	C	D	B	C	D
Rated voltage	300 V	-	300 V	300 V	-	300 V	300 V	-	300 V
Rated current	15 A	-	10 A	15 A	-	10 A	15 A	-	10 A
Approvals per	**CSA**			**CSA**			**CSA**		
Use group	B	C	D	B	C	D	B	C	D
Rated voltage	300 V	-	300 V	300 V	-	300 V	300 V	-	300 V
Rated current	15 A	-	10 A	15 A	-	10 A	15 A	-	10 A

Connection Data	
Connection technology	CAGE CLAMP®
Strip length	5 … 6 mm / 0.2 … 0.24 inches
Conductor connection direction to PCB	90 °
Solid conductor	0.08 … 2.5 mm² / 28 … 12 AWG
Fine-stranded conductor	0.08 … 2.5 mm² / 28 … 12 AWG
Fine-stranded conductor; with insulated ferrule	0.25 … 1.5 mm²
Fine-stranded conductor; with uninsulated ferrule	0.25 … 1.5 mm²
Note (conductor cross-section)	12 AWG: THHN, THWN

Material data	
Material group	I
Insulation material (main housing)	Polyamide (PA66)
Flammability class per UL94	V0
Clamping spring material	Chrome-nickel spring steel (CrNi)
Contact material	Electrolytic copper (E_{Cu})
Contact Plating	Tin

Mechanical data	
Solder pin arrangement	within the terminal block (in-line)
Number of solder pins per potential	2
Solder pin length	4 mm
Solder pin dimensions	0.7 x 0.7 mm
Drilled hole diameter	1.1 $^{(+0.1)}$ mm

Environmental requirements	
Limit temperature range	-60 … +105 °C

Ferrule	Page 1081
Marking	Page 1067
Test and measurement	Page 261
Tool	Page 1072
Custom commoning	Page 272
See technical section for further information	
Approvals and corresponding ratings, visit www.wago.com	

Stackable PCB terminal block ▸ 255 Series

CAGE CLAMP® ▸ Actuation type: Push-button ▸ 2.5 mm²

Pin spacing: 5/5.08 mm / 0.197/0.2 inches



255-401

Color	Item No.	PU (SPU)
gray	255-401	500 (100)
blue	255-744	500 (100)
orange	255-746	500 (100)
black	255-748	500 (100)
yellow	255-741	500 (100)
light gray	255-743	500 (100)
light green	255-747	500 (100)
red	255-740	500 (100)
dark gray	255-742	500 (100)

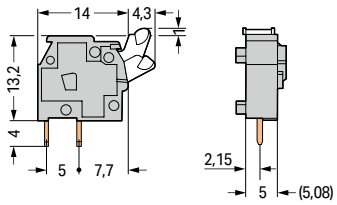

Pin spacing: 7.5/7.62 mm / 0.295/0.3 inches



255-501

Color	Item No.	PU (SPU)
gray	255-501	400 (100)
blue	255-754	400 (100)
orange	255-756	400 (100)
black	255-758	400 (100)
yellow	255-751	400 (100)
light gray	255-753	400 (100)
light green	255-757	400 (100)
red	255-750	400 (100)
dark gray	255-752	400 (100)

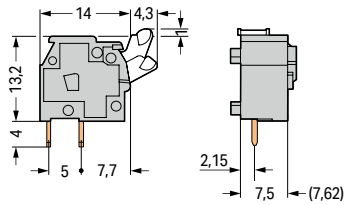

Pin spacing: 10/10.16 mm / 0.394/0.4 inches



255-601

Color	Item No.	PU (SPU)
gray	255-601	300 (100)
blue	255-764	300 (100)
orange	255-766	300 (100)
black	255-768	300 (100)
yellow	255-761	300 (100)
light gray	255-763	300 (100)
light green	255-767	300 (100)
red	255-760	300 (100)
dark gray	255-762	300 (100)

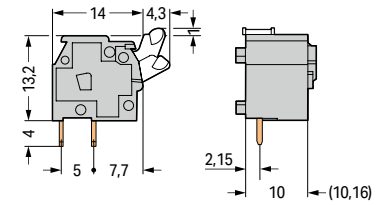

Accessories; for all products on this page



End plate; Width: 1 mm; snap-on type

Color	Item No.	PU (SPU)
gray	255-100	2000 (100)
blue	255-400	2000 (100)
orange	255-600	2000 (100)
black	255-800	2000 (100)
light gray	255-300	2000 (100)
light green	255-700	2000 (100)
red	255-500	2000 (100)
dark gray	255-200	2000 (100)



Intermediate plate; extends pin spacing; Width: 10.16 mm / 0.4 inches



Intermediate plate; extends pin spacing; Width: 5.08 mm / 0.2 inches



Intermediate plate; extends pin spacing; Width: 7.62 mm / 0.3 inches

PU = packaging unit; SPU = subpackaging unit; Dimensions in mm

Variants:

- Other colors
- Versions for Ex e II and Ex i
- Other versions (or variants) can be requested from WAGO Sales or configured at https://configurator.wago.com/.

PCB terminal block ▸ 255 Series

CAGE CLAMP® ▸ Actuation type: Push-button ▸ 2.5 mm² ▸ Color: gray

1

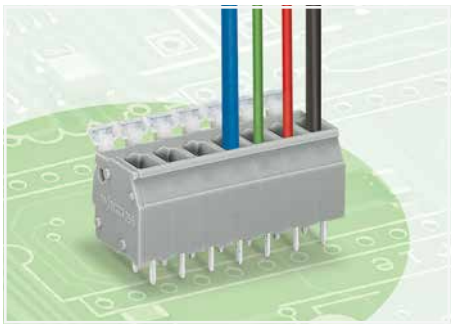

- PCB terminal blocks with push-buttons and CAGE CLAMP® connection
- Versions with Ex approval
- Set to metric or inch pin spacing by compressing PCB terminal strips or pulling them apart
- Ideal for in-the-field wiring thanks to simplified push-button actuation
- Convenient, tool-free operation

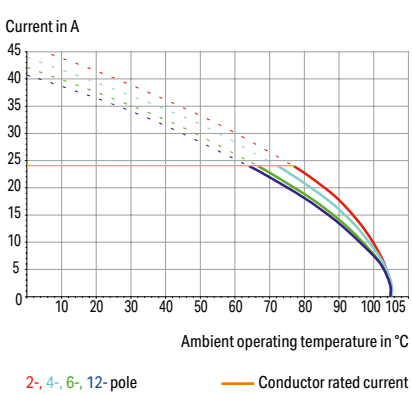

Electrical data									
Pin spacing	**5/5.08 mm / 0.197/0.2 inches**			**7.5/7.62 mm / 0.295/0.3 inches**			**10/10.16 mm / 0.394/0.4 inches**		
Ratings per	**IEC/EN 60664-1**			**IEC/EN 60664-1**			**IEC/EN 60664-1**		
Overvoltage category	III	III	II	III	III	II	III	III	II
Pollution degree	3	2	2	3	2	2	3	2	2
Nominal voltage	320 V	320 V	630 V	500 V	630 V	1000 V	630 V	1000 V	1000 V
Rated impulse withstand voltage	4 kV	4 kV	4 kV	6 kV	6 kV	6 kV	8 kV	8 kV	8 kV
Rated current	24 A	24 A	24 A	24 A	24 A	24 A	24 A	24 A	24 A
Approvals per	**UL 1059**			**UL 1059**			**UL 1059**		
Use group	B	C	D	B	C	D	B	C	D
Rated voltage	300 V	-	300 V	300 V	-	300 V	300 V	-	300 V
Rated current	15 A	-	10 A	15 A	-	10 A	15 A	-	10 A
Approvals per	**CSA**			**CSA**			**CSA**		
Use group	B	C	D	B	C	D	B	C	D
Rated voltage	300 V	-	300 V	300 V	-	300 V	300 V	-	300 V
Rated current	15 A	-	10 A	15 A	-	10 A	15 A	-	10 A

Connection Data	
Connection technology	CAGE CLAMP®
Strip length	5 … 6 mm / 0.2 … 0.24 inches
Conductor connection direction to PCB	90 °
Fine-stranded conductor	0.08 … 2.5 mm² / 28 … 12 AWG
Fine-stranded conductor; with insulated ferrule	0.25 … 1.5 mm²
Fine-stranded conductor; with uninsulated ferrule	0.25 … 1.5 mm²
Note (conductor cross-section)	12 AWG: THHN, THWN

Material data	
Material group	I
Insulation material (main housing)	Polyamide (PA66)
Flammability class per UL94	V0
Clamping spring material	Chrome-nickel spring steel (CrNi)
Contact material	Electrolytic copper (E_{Cu})
Contact Plating	Tin

Mechanical data	
Solder pin arrangement	over the entire terminal strip (in-line)
Number of solder pins per potential	2
Solder pin length	4 mm
Solder pin dimensions	0.7 x 0.7 mm
Drilled hole diameter	1.1 $^{(+0.1)}$ mm

Environmental requirements	
Limit temperature range	-60 … +105 °C

Ferrule	Page 1081
Marking	Page 1067
Test and measurement	Page 261
Tool	Page 1072
Custom commoning	Page 272
See technical section for further information	
Approvals and corresponding ratings, visit www.wago.com	

PCB terminal block ▸ 255 Series

CAGE CLAMP® ▸ Actuation type: Push-button ▸ 2.5 mm² ▸ Color: gray

Pin spacing: 5/5.08 mm / 0.197/0.2 inches



255-410

Pole number	Item No.	PU (SPU)
2	255-402	400 (100)
3	255-403	280 (70)
4	255-404	200 (50)
5	255-405	160 (40)
6	255-406	140 (35)
7	255-407	120 (30)
8	255-408	100 (25)
9	255-409	100 (25)
10	255-410	80 (20)
12	255-412	60 (15)

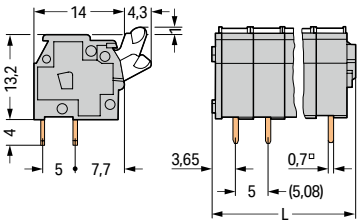

L = (pole no. x pin spacing) + 2.9 mm

Pin spacing: 7.5/7.62 mm / 0.295/0.3 inches

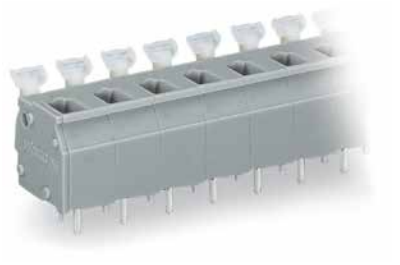

255-507

Pole number	Item No.	PU (SPU)
2	255-502	280 (70)
3	255-503	180 (45)
4	255-504	140 (35)
5	255-505	120 (30)
6	255-506	100 (25)
7	255-507	80 (20)
8	255-508	60 (15)
9	255-509	60 (15)
10	255-510	60 (15)
12	255-512	40 (10)

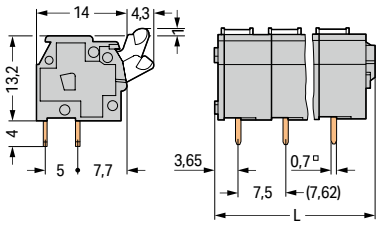

L = (pole no. x pin spacing) + 2.9 mm

Pin spacing: 10/10.16 mm / 0.394/0.4 inches



255-605

Pole number	Item No.	PU (SPU)
2	255-602	200 (50)
3	255-603	140 (35)
4	255-604	100 (25)
5	255-605	80 (20)
6	255-606	60 (15)
7	255-607	60 (15)
8	255-608	60 (15)
9	255-609	40 (10)
10	255-610	40 (10)
12	255-612	40 (10)

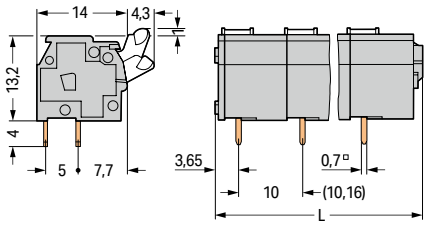

L = (pole no. x pin spacing) + 2.9 mm

PU = packaging unit; SPU = subpackaging unit; Dimensions in mm

Variants:

- Other pole numbers
- Versions for Ex e II and Ex i
- Other colors
- Mixed-color PCB connector strips
- Direct marking
- Other versions (or variants) can be requested from WAGO Sales or configured at https://configurator.wago.com/.

PCB terminal block ▸ 255 Series

CAGE CLAMP® ▸ Actuation type: Finger-operated lever ▸ 2.5 mm² ▸ Color: gray

1

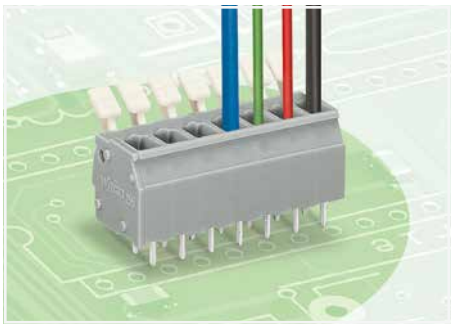

- PCB terminal blocks with push-buttons and CAGE CLAMP® connection
- Versions with Ex approval
- Set to metric or inch pin spacing by compressing PCB terminal strips or pulling them apart
- Ideal for in-the-field wiring thanks to simplified push-button actuation
- Convenient, tool-free operation

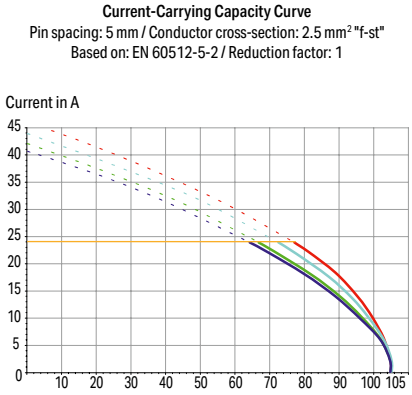

Electrical data									
Pin spacing	**5/5.08 mm / 0.197/0.2 inches**			**7.5/7.62 mm / 0.295/0.3 inches**			**10/10.16 mm / 0.394/0.4 inches**		
Ratings per	**IEC/EN 60664-1**			**IEC/EN 60664-1**			**IEC/EN 60664-1**		
Overvoltage category	III	III	II	III	III	II	III	III	II
Pollution degree	3	2	2	3	2	2	3	2	2
Nominal voltage	320 V	320 V	630 V	500 V	630 V	1000 V	630 V	1000 V	1000 V
Rated impulse withstand voltage	4 kV	4 kV	4 kV	6 kV	6 kV	6 kV	8 kV	8 kV	8 kV
Rated current	24 A	24 A	24 A	24 A	24 A	24 A	24 A	24 A	24 A
Approvals per	**UL 1059**			**UL 1059**			**UL 1059**		
Use group	B	C	D	B	C	D	B	C	D
Rated voltage	300 V	-	300 V	300 V	-	300 V	300 V	-	300 V
Rated current	15 A	-	10 A	15 A	-	10 A	15 A	-	10 A
Approvals per	**CSA**			**CSA**			**CSA**		
Use group	B	C	D	B	C	D	B	C	D
Rated voltage	300 V	-	300 V	300 V	-	300 V	300 V	-	300 V
Rated current	15 A	-	10 A	15 A	-	10 A	15 A	-	10 A

Connection Data	
Connection technology	CAGE CLAMP®
Strip length	5 … 6 mm / 0.2 … 0.24 inches
Conductor connection direction to PCB	90 °
Fine-stranded conductor	0.08 … 2.5 mm² / 28 … 12 AWG
Fine-stranded conductor; with insulated ferrule	0.25 … 1.5 mm²
Fine-stranded conductor; with uninsulated ferrule	0.25 … 1.5 mm²
Note (conductor cross-section)	12 AWG: THHN, THWN

Material data	
Material group	I
Insulation material (main housing)	Polyamide (PA66)
Flammability class per UL94	V0
Clamping spring material	Chrome-nickel spring steel (CrNi)
Contact material	Electrolytic copper (E_{Cu})
Contact Plating	Tin

Mechanical data	
Solder pin arrangement	over the entire terminal strip (in-line)
Number of solder pins per potential	2
Solder pin length	4 mm
Solder pin dimensions	0.7 x 0.7 mm
Drilled hole diameter	1.1 $^{(+0.1)}$ mm

Environmental requirements	
Limit temperature range	-60 … +105 °C

Ferrule	Page 1081
Marking	Page 1067
Test and measurement	Page 261
Custom commoning	Page 272
See technical section for further information	
Approvals and corresponding ratings, visit www.wago.com	

PCB terminal block ▸ 255 Series

CAGE CLAMP® ▸ Actuation type: Finger-operated lever ▸ 2.5 mm² ▸ Color: gray

Pin spacing: 5/5.08 mm / 0.197/0.2 inches



255-402/333-000

Pole number	Item No.	PU (SPU)
2	255-402/333-000	400 (100)
3	255-403/333-000	280 (70)
4	255-404/333-000	200 (50)
5	255-405/333-000	160 (40)
6	255-406/333-000	140 (35)
7	255-407/333-000	120 (30)
8	255-408/333-000	100 (25)
9	255-409/333-000	100 (25)
10	255-410/333-000	80 (20)
12	255-412/333-000	60 (15)

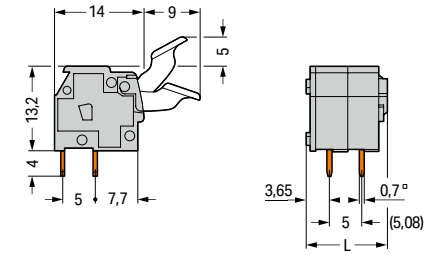

L = (pole no. x pin spacing) + 2.9 mm

Pin spacing: 7.5/7.62 mm / 0.295/0.3 inches



255-502/333-000

Pole number	Item No.	PU (SPU)
2	255-502/333-000	280 (70)
3	255-503/333-000	180 (45)
4	255-504/333-000	140 (35)
5	255-505/333-000	120 (30)
6	255-506/333-000	100 (25)
7	255-507/333-000	80 (20)
8	255-508/333-000	60 (15)
9	255-509/333-000	60 (15)
10	255-510/333-000	60 (15)
12	255-512/333-000	40 (10)

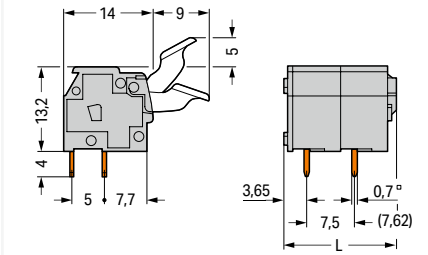

L = (pole no. x pin spacing) + 2.9 mm

Pin spacing: 10/10.16 mm / 0.394/0.4 inches



255-602/333-000

Pole number	Item No.	PU (SPU)
2	255-602/333-000	200 (50)
3	255-603/333-000	140 (35)
4	255-604/333-000	100 (25)
5	255-605/333-000	80 (20)
6	255-606/333-000	60 (15)
7	255-607/333-000	60 (15)
8	255-608/333-000	60 (15)
9	255-609/333-000	40 (10)
10	255-610/333-000	40 (10)
12	255-612/333-000	40 (10)

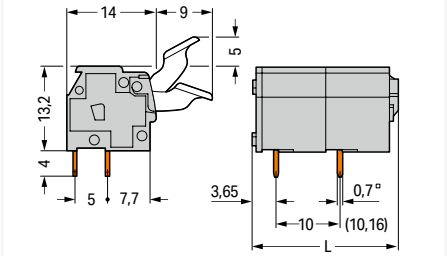

L = (pole no. x pin spacing) + 2.9 mm

PU = packaging unit; SPU = subpackaging unit; Dimensions in mm

Variants:

- Other pole numbers
- Versions for Ex e II and Ex i
- Other colors
- Mixed-color PCB connector strips
- Direct marking
- Other versions (or variants) can be requested from WAGO Sales or configured at https://configurator.wago.com/.

Stackable PCB terminal block ▸ 256 Series

CAGE CLAMP® ▸ Actuation type: Push-button ▸ 2.5 mm²

1

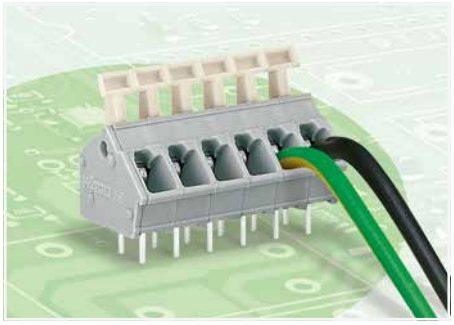

- PCB modular terminal blocks with push-buttons and CAGE CLAMP® connection
- Versions with Ex approval
- Set to metric or inch pin spacing by compressing PCB terminal strips or pulling them apart
- Ideal for in-the-field wiring thanks to simplified push-button actuation
- Convenient, tool-free operation

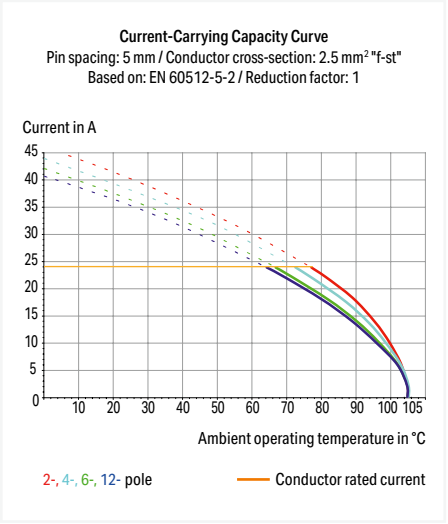

Electrical data									
Pin spacing	**5/5.08 mm / 0.197/0.2 inches**			**7.5/7.62 mm / 0.295/0.3 inches**			**10/10.16 mm / 0.394/0.4 inches**		
Ratings per	**IEC/EN 60664-1**			**IEC/EN 60664-1**			**IEC/EN 60664-1**		
Overvoltage category	III	III	II	III	III	II	III	III	II
Pollution degree	3	2	2	3	2	2	3	2	2
Nominal voltage	250 V	320 V	630 V	320 V	320 V	630 V	500 V	630 V	1000 V
Rated impulse withstand voltage	4 kV	4 kV	4 kV	4 kV	4 kV	4 kV	6 kV	6 kV	6 kV
Rated current	24 A	24 A	24 A	24 A	24 A	24 A	24 A	24 A	24 A
Approvals per	**UL 1059**			**UL 1059**			**UL 1059**		
Use group	B	C	D	B	C	D	B	C	D
Rated voltage	300 V	-	300 V	300 V	-	300 V	300 V	-	300 V
Rated current	15 A	-	10 A	15 A	-	10 A	15 A	-	10 A
Approvals per	**CSA**			**CSA**			**CSA**		
Use group	B	C	D	B	C	D	B	C	D
Rated voltage	300 V	-	300 V	300 V	-	300 V	300 V	-	300 V
Rated current	15 A	-	10 A	15 A	-	10 A	15 A	-	10 A

Connection Data	
Connection technology	CAGE CLAMP®
Strip length	5 … 6 mm / 0.2 … 0.24 inches
Conductor connection direction to PCB	45 °
Solid conductor	0.08 … 2.5 mm² / 28 … 12 AWG
Fine-stranded conductor	0.08 … 2.5 mm² / 28 … 12 AWG
Fine-stranded conductor; with insulated ferrule	0.25 … 1.5 mm²
Fine-stranded conductor; with uninsulated ferrule	0.25 … 1.5 mm²
Note (conductor cross-section)	12 AWG: THHN, THWN

Material data	
Material group	I
Insulation material (main housing)	Polyamide (PA66)
Flammability class per UL94	V0
Clamping spring material	Chrome-nickel spring steel (CrNi)
Contact material	Electrolytic copper (E_{Cu})
Contact Plating	Tin

Mechanical data	
Solder pin arrangement	within the terminal block (in-line)
Number of solder pins per potential	2
Solder pin length	4 mm
Solder pin dimensions	0.7 x 0.7 mm
Drilled hole diameter	1.1 $^{(+0.1)}$ mm

Environmental requirements	
Limit temperature range	-60 … +105 °C

Ferrule	Page 1081
Marking	Page 1067
Test and measurement	Page 261
Tool	Page 1072
Custom commoning	Page 272
See technical section for further information	
Approvals and corresponding ratings, visit www.wago.com	

Stackable PCB terminal block ▸ 256 Series

CAGE CLAMP® ▸ Actuation type: Push-button ▸ 2.5 mm²

Pin spacing: 5/5.08 mm / 0.197/0.2 inches



256-401

Color	Item No.	PU (SPU)
gray	256-401	600 (100)
blue	256-744	600 (100)
orange	256-746	600 (100)
light gray	256-743	600 (100)
light green	256-747	600 (100)
red	256-740	600 (100)
dark gray	256-742	600 (100)

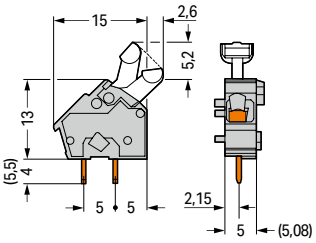

Pin spacing: 7.5/7.62 mm / 0.295/0.3 inches



256-501

Color	Item No.	PU (SPU)
gray	256-501	400 (100)
blue	256-754	400 (100)
orange	256-756	400 (100)
light gray	256-753	400 (100)
light green	256-757	400 (100)
red	256-750	400 (100)
dark gray	256-752	400 (100)

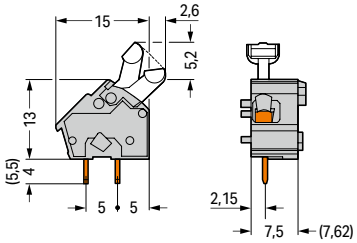

Pin spacing: 10/10.16 mm / 0.394/0.4 inches



256-601

Color	Item No.	PU (SPU)
gray	256-601	300 (100)
blue	256-764	300 (100)
orange	256-766	300 (100)
light gray	256-763	300 (100)
light green	256-767	300 (100)
red	256-760	300 (100)
dark gray	256-762	300 (100)

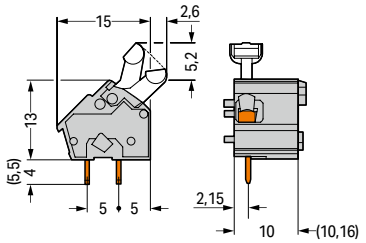

Accessories; for all products on this page



End plate; Width: 1 mm; snap-on type

Color	Item No.	PU (SPU)
gray	256-100	2000 (100)
blue	256-400	2000 (100)
orange	256-600	2000 (100)
black	256-800	2000 (100)
light gray	256-300	2000 (100)
light green	256-700	2000 (100)
red	256-500	2000 (100)
dark gray	256-200	2000 (100)

PU = packaging unit; SPU = subpackaging unit; Dimensions in mm

Variants:

- Other colors
- Versions for Ex e II and Ex i
- Solder pin length: 5.5 mm
- Other versions (or variants) can be requested from WAGO Sales or configured at https://configurator.wago.com/.

PCB terminal block ▸ 256 Series

CAGE CLAMP® ▸ Actuation type: Push-button ▸ 2.5 mm² ▸ Color: gray

1

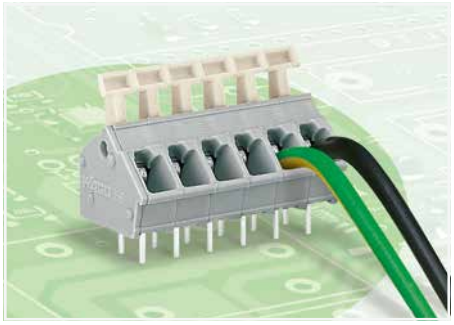

- PCB terminal blocks with push-buttons and CAGE CLAMP® connection
- Versions with Ex approval
- Set to metric or inch pin spacing by compressing PCB terminal strips or pulling them apart
- Ideal for in-the-field wiring thanks to simplified push-button actuation
- Convenient, tool-free operation

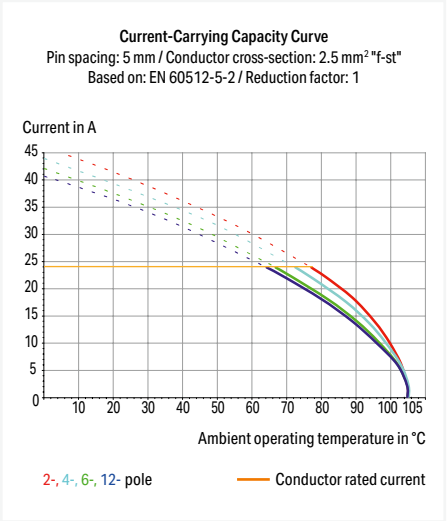

Electrical data									
Pin spacing	**5/5.08 mm / 0.197/0.2 inches**			**7.5/7.62 mm / 0.295/0.3 inches**			**10/10.16 mm / 0.394/0.4 inches**		
Ratings per	**IEC/EN 60664-1**			**IEC/EN 60664-1**			**IEC/EN 60664-1**		
Overvoltage category	III	III	II	III	III	II	III	III	II
Pollution degree	3	2	2	3	2	2	3	2	2
Nominal voltage	250 V	320 V	630 V	320 V	320 V	630 V	500 V	630 V	1000 V
Rated impulse withstand voltage	4 kV	4 kV	4 kV	4 kV	4 kV	4 kV	6 kV	6 kV	6 kV
Rated current	24 A	24 A	24 A	24 A	24 A	24 A	24 A	24 A	24 A
Approvals per	**UL 1059**			**UL 1059**			**UL 1059**		
Use group	B	C	D	B	C	D	B	C	D
Rated voltage	300 V	-	300 V	300 V	-	300 V	300 V	-	300 V
Rated current	15 A	-	10 A	15 A	-	10 A	15 A	-	10 A
Approvals per	**CSA**			**CSA**			**CSA**		
Use group	B	C	D	B	C	D	B	C	D
Rated voltage	300 V	-	300 V	300 V	-	300 V	300 V	-	300 V
Rated current	15 A	-	10 A	15 A	-	10 A	15 A	-	10 A

Connection Data	
Connection technology	CAGE CLAMP®
Strip length	5 … 6 mm / 0.2 … 0.24 inches
Conductor connection direction to PCB	45 °
Solid conductor	0.08 … 2.5 mm² / 28 … 12 AWG
Fine-stranded conductor	0.08 … 2.5 mm² / 28 … 12 AWG
Fine-stranded conductor; with insulated ferrule	0.25 … 1.5 mm²
Fine-stranded conductor; with uninsulated ferrule	0.25 … 1.5 mm²
Note (conductor cross-section)	12 AWG: THHN, THWN

Material data	
Material group	I
Insulation material (main housing)	Polyamide (PA66)
Flammability class per UL94	V0
Clamping spring material	Chrome-nickel spring steel (CrNi)
Contact material	Electrolytic copper (E_{Cu})
Contact Plating	Tin

Mechanical data	
Solder pin arrangement	over the entire terminal strip (in-line)
Number of solder pins per potential	2
Solder pin length	4 mm
Solder pin dimensions	0.7 x 0.7 mm
Drilled hole diameter	1.1 $^{(+0.1)}$ mm

Environmental requirements	
Limit temperature range	-60 … +105 °C

Ferrule	Page 1081
Marking	Page 1067
Test and measurement	Page 261
Tool	Page 1072
Custom commoning	Page 272
See technical section for further information	
Approvals and corresponding ratings, visit www.wago.com	

PCB terminal block ▸ 256 Series

CAGE CLAMP® ▸ Actuation type: Push-button ▸ 2.5 mm² ▸ Color: gray

Pin spacing: 5/5.08 mm / 0.197/0.2 inches



255-410

Pole number	Item No.	PU (SPU)
2	256-402	400 (100)
3	256-403	280 (70)
4	256-404	200 (50)
5	256-405	160 (40)
6	256-406	140 (35)
7	256-407	120 (30)
8	256-408	100 (25)
9	256-409	100 (25)
10	256-410	80 (20)
12	256-412	60 (15)

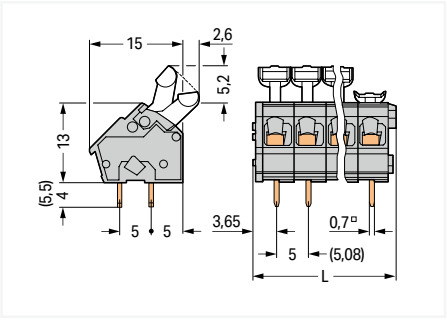

L = (pole no. x pin spacing) + 2.9 mm

Pin spacing: 7.5/7.62 mm / 0.295/0.3 inches

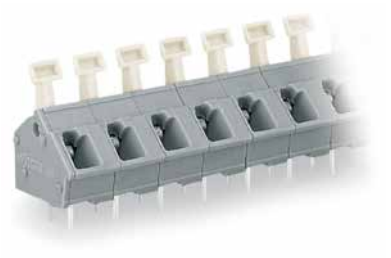

256-507

Pole number	Item No.	PU (SPU)
2	256-502	280 (70)
3	256-503	180 (45)
4	256-504	140 (35)
5	256-505	120 (30)
6	256-506	100 (25)
7	256-507	80 (20)
8	256-508	60 (15)
9	256-509	60 (15)
10	256-510	60 (15)
12	256-512	40 (10)

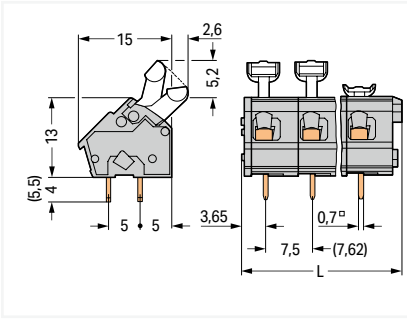

L = (pole no. x pin spacing) + 2.9 mm

Pin spacing: 10/10.16 mm / 0.394/0.4 inches

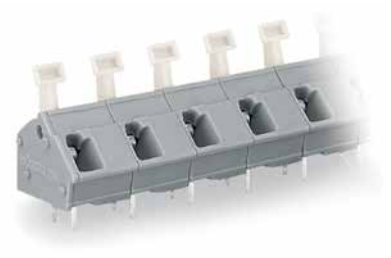

256-605

Pole number	Item No.	PU (SPU)
2	256-602	200 (50)
3	256-603	140 (35)
4	256-604	100 (25)
5	256-605	80 (20)
6	256-606	60 (15)
7	256-607	60 (15)
8	256-608	60 (15)
9	256-609	40 (10)
10	256-610	40 (10)
12	256-612	40 (10)

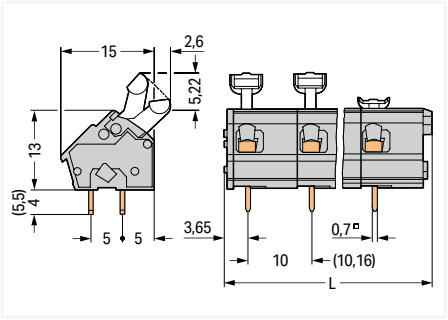

L = (pole no. x pin spacing) + 2.9 mm

PU = packaging unit; SPU = subpackaging unit; Dimensions in mm

Variants:

- Other pole numbers
- Versions for Ex e II and Ex i
- Other colors
- Mixed-color PCB connector strips
- Direct marking
- Other versions (or variants) can be requested from WAGO Sales or configured at https://configurator.wago.com/.

Stackable PCB terminal block ▸ 256 Series

CAGE CLAMP® ▸ Actuation type: Push-button (angled) ▸ 2.5 mm²

1

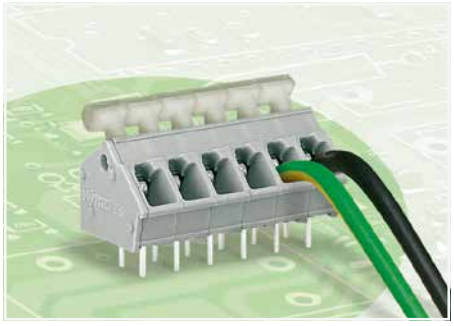

- PCB terminal blocks with angled push-buttons and CAGE CLAMP® connection
- Version with angled push-buttons for easy top-of-unit actuation
- Set to metric or inch pin spacing by compressing PCB terminal strips or pulling them apart
- Ideal for in-the-field wiring thanks to simplified push-button actuation
- Convenient, tool-free operation

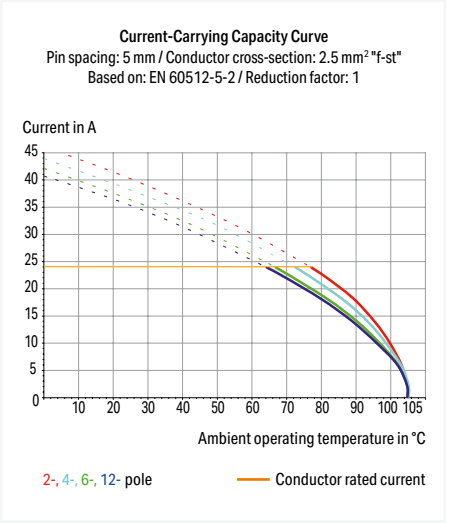

Electrical data									
Pin spacing	**5/5.08 mm / 0.197/0.2 inches**			**7.5/7.62 mm / 0.295/0.3 inches**			**10/10.16 mm / 0.394/0.4 inches**		
Ratings per	**IEC/EN 60664-1**			**IEC/EN 60664-1**			**IEC/EN 60664-1**		
Overvoltage category	III	III	II	III	III	II	III	III	II
Pollution degree	3	2	2	3	2	2	3	2	2
Nominal voltage	250 V	320 V	630 V	320 V	320 V	630 V	500 V	630 V	1000 V
Rated impulse withstand voltage	4 kV	4 kV	4 kV	4 kV	4 kV	4 kV	6 kV	6 kV	6 kV
Rated current	24 A	24 A	24 A	24 A	24 A	24 A	24 A	24 A	24 A
Approvals per	**UL 1059**			**UL 1059**			**UL 1059**		
Use group	B	C	D	B	C	D	B	C	D
Rated voltage	300 V	-	300 V	300 V	-	300 V	300 V	-	300 V
Rated current	15 A	-	10 A	15 A	-	10 A	15 A	-	10 A
Approvals per	**CSA**			**CSA**			**CSA**		
Use group	B	C	D	B	C	D	B	C	D
Rated voltage	300 V	-	300 V	300 V	-	300 V	300 V	-	300 V
Rated current	15 A	-	10 A	15 A	-	10 A	15 A	-	10 A

Connection Data	
Connection technology	CAGE CLAMP®
Strip length	5 … 6 mm / 0.2 … 0.24 inches
Conductor connection direction to PCB	45 °
Solid conductor	0.08 … 2.5 mm² / 28 … 12 AWG
Fine-stranded conductor	0.08 … 2.5 mm² / 28 … 12 AWG
Fine-stranded conductor; with insulated ferrule	0.25 … 1.5 mm²
Fine-stranded conductor; with uninsulated ferrule	0.25 … 1.5 mm²
Note (conductor cross-section)	12 AWG: THHN, THWN

Material data	
Material group	I
Insulation material (main housing)	Polyamide (PA66)
Flammability class per UL94	V0
Clamping spring material	Chrome-nickel spring steel (CrNi)
Contact material	Electrolytic copper (E_{Cu})
Contact Plating	Tin

Mechanical data	
Solder pin arrangement	within the terminal block (in-line)
Number of solder pins per potential	2
Solder pin length	4 mm
Solder pin dimensions	0.7 x 0.7 mm
Drilled hole diameter	1.1 $^{(+0.1)}$ mm

Environmental requirements	
Limit temperature range	-60 … +105 °C

Ferrule	Page 1081
Marking	Page 1067
Test and measurement	Page 261
Tool	Page 1072
Custom commoning	Page 272
See technical section for further information	
Approvals and corresponding ratings, visit www.wago.com	

Stackable PCB terminal block ▸ 256 Series

CAGE CLAMP® ▸ Actuation type: Push-button (angled) ▸ 2.5 mm²

Pin spacing: 5/5.08 mm / 0.197/0.2 inches



256-461

Color	Item No.	PU (SPU)
gray	256-461	600 (100)
blue	256-844	600 (100)
orange	256-846	600 (100)
light gray	256-843	600 (100)
light green	256-847	600 (100)
red	256-840	600 (100)
dark gray	256-842	600 (100)

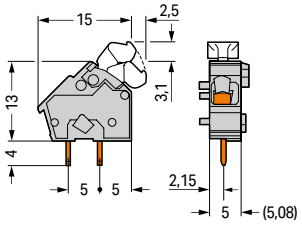

Pin spacing: 7.5/7.62 mm / 0.295/0.3 inches



256-561

Color	Item No.	PU (SPU)
gray	256-561	400 (100)
blue	256-854	400 (100)
orange	256-856	400 (100)
light gray	256-853	400 (100)
light green	256-857	400 (100)
red	256-850	400 (100)
dark gray	256-852	400 (100)

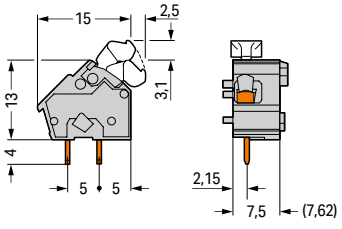

Pin spacing: 10/10.16 mm / 0.394/0.4 inches



256-661

Color	Item No.	PU (SPU)
gray	256-661	300 (100)
blue	256-864	300 (100)
orange	256-866	300 (100)
light gray	256-863	300 (100)
light green	256-867	300 (100)
red	256-860	300 (100)
dark gray	256-862	300 (100)

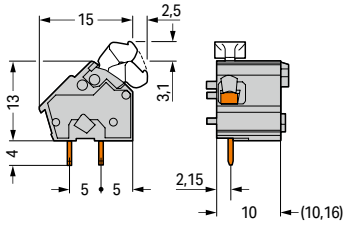

Accessories; for all products on this page



End plate; Width: 1 mm; snap-on type

Color	Item No.	PU (SPU)
gray	256-100	2000 (100)
blue	256-400	2000 (100)
orange	256-600	2000 (100)
black	256-800	2000 (100)
light gray	256-300	2000 (100)
light green	256-700	2000 (100)
red	256-500	2000 (100)
dark gray	256-200	2000 (100)

PU = packaging unit; SPU = subpackaging unit; Dimensions in mm

Variants:

- Other colors
- Versions for Ex e II and Ex i
- Solder pin length: 5.5 mm
- Other versions (or variants) can be requested from WAGO Sales or configured at https://configurator.wago.com/.

PCB terminal block ▸ 256 Series

CAGE CLAMP® ▸ Actuation type: Push-button (angled) ▸ 2.5 mm² ▸ Color: gray

1

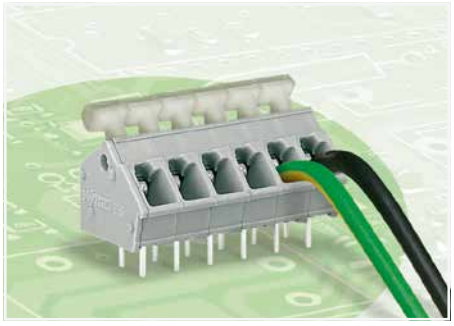

- PCB terminal blocks with angled push-buttons and CAGE CLAMP® connection
- Version with angled push-buttons for easy top-of-unit actuation
- Set to metric or inch pin spacing by compressing PCB terminal strips or pulling them apart
- Ideal for in-the-field wiring thanks to simplified push-button actuation
- Convenient, tool-free operation

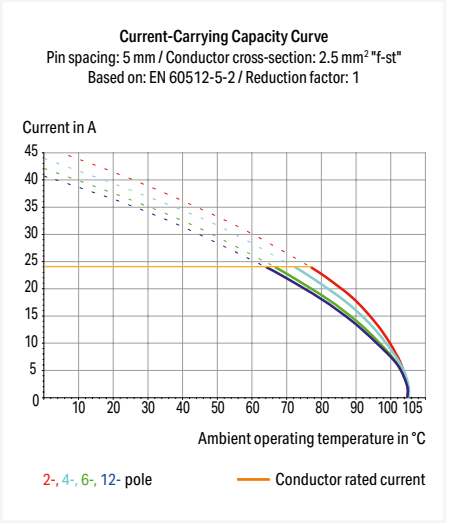

Electrical data									
Pin spacing	**5/5.08 mm / 0.197/0.2 inches**			**7.5/7.62 mm / 0.295/0.3 inches**			**10/10.16 mm / 0.394/0.4 inches**		
Ratings per	**IEC/EN 60664-1**			**IEC/EN 60664-1**			**IEC/EN 60664-1**		
Overvoltage category	III	III	II	III	III	II	III	III	II
Pollution degree	3	2	2	3	2	2	3	2	2
Nominal voltage	250 V	320 V	630 V	320 V	320 V	630 V	500 V	630 V	1000 V
Rated impulse withstand voltage	4 kV	4 kV	4 kV	4 kV	4 kV	4 kV	6 kV	6 kV	6 kV
Rated current	24 A	24 A	24 A	24 A	24 A	24 A	24 A	24 A	24 A
Approvals per	**UL 1059**			**UL 1059**			**UL 1059**		
Use group	B	C	D	B	C	D	B	C	D
Rated voltage	300 V	-	300 V	300 V	-	300 V	300 V	-	300 V
Rated current	15 A	-	10 A	15 A	-	10 A	15 A	-	10 A
Approvals per	**CSA**			**CSA**			**CSA**		
Use group	B	C	D	B	C	D	B	C	D
Rated voltage	300 V	-	300 V	300 V	-	300 V	300 V	-	300 V
Rated current	15 A	-	10 A	15 A	-	10 A	15 A	-	10 A

Connection Data	
Connection technology	CAGE CLAMP®
Strip length	5 … 6 mm / 0.2 … 0.24 inches
Conductor connection direction to PCB	45 °
Solid conductor	0.08 … 2.5 mm² / 28 … 12 AWG
Fine-stranded conductor	0.08 … 2.5 mm² / 28 … 12 AWG
Fine-stranded conductor; with insulated ferrule	0.25 … 1.5 mm²
Fine-stranded conductor; with uninsulated ferrule	0.25 … 1.5 mm²
Note (conductor cross-section)	12 AWG: THHN, THWN

Material data	
Material group	I
Insulation material (main housing)	Polyamide (PA66)
Flammability class per UL94	V0
Clamping spring material	Chrome-nickel spring steel (CrNi)
Contact material	Electrolytic copper (E_{Cu})
Contact Plating	Tin

Mechanical data	
Solder pin arrangement	over the entire terminal strip (in-line)
Number of solder pins per potential	2
Solder pin dimensions	0.7 x 0.7 mm
Drilled hole diameter	1.1 $^{(+0.1)}$ mm

Environmental requirements	
Limit temperature range	-60 … +105 °C

Ferrule	Page 1081
Marking	Page 1067
Test and measurement	Page 261
Tool	Page 1072
Custom commoning	Page 272
See technical section for further information	
Approvals and corresponding ratings, visit www.wago.com	

PCB terminal block ▸ 256 Series

CAGE CLAMP® ▸ Actuation type: Push-button (angled) ▸ 2.5 mm² ▸ Color: gray

Pin spacing: 5/5.08 mm / 0.197/0.2 inches



256-410/334-000

Pole number	Item No.	PU (SPU)
2	256-402/334-000	400 (100)
3	256-403/334-000	280 (70)
4	256-404/334-000	200 (50)
5	256-405/334-000	160 (40)
6	256-406/334-000	140 (35)
7	256-407/334-000	120 (30)
8	256-408/334-000	100 (25)
9	256-409/334-000	100 (25)
10	256-410/334-000	80 (20)
12	256-412/334-000	60 (15)

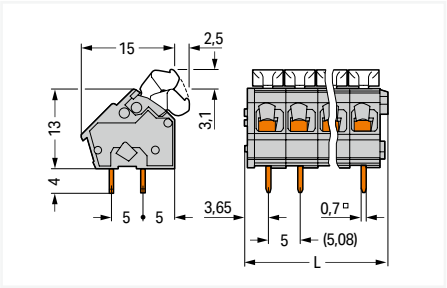

L = (pole no. x pin spacing) + 2.9 mm

Pin spacing: 7.5/7.62 mm / 0.295/0.3 inches



256-507/334-000

Pole number	Item No.	PU (SPU)
2	256-502/334-000	280 (70)
3	256-503/334-000	180 (45)
4	256-504/334-000	140 (35)
5	256-505/334-000	120 (30)
6	256-506/334-000	100 (25)
7	256-507/334-000	80 (20)
8	256-508/334-000	60 (15)
9	256-509/334-000	60 (15)
10	256-510/334-000	60 (15)
12	256-512/334-000	40 (10)

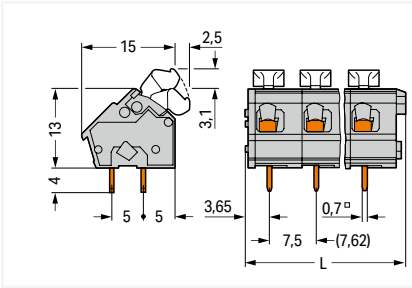

L = (pole no. x pin spacing) + 2.9 mm

Pin spacing: 10/10.16 mm / 0.394/0.4 inches

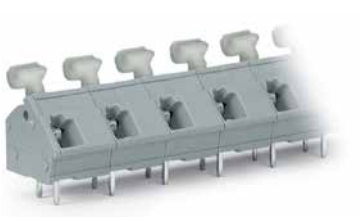

256-605/334-000

Pole number	Item No.	PU (SPU)
2	256-602/334-000	200 (50)
3	256-603/334-000	140 (35)
4	256-604/334-000	100 (25)
5	256-605/334-000	80 (20)
6	256-606/334-000	60 (15)
7	256-607/334-000	60 (15)
8	256-608/334-000	60 (15)
9	256-609/334-000	40 (10)
10	256-610/334-000	40 (10)
12	256-612/334-000	40 (10)

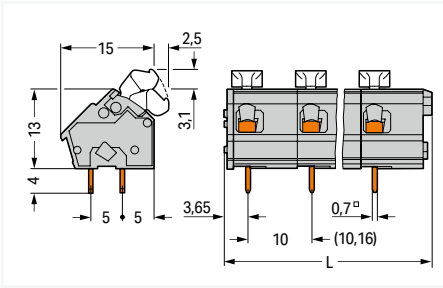

L = (pole no. x pin spacing) + 2.9 mm

PU = packaging unit; SPU = subpackaging unit; Dimensions in mm

Variants:

- Other pole numbers
- Versions for Ex e II and Ex i
- Other colors
- Mixed-color PCB connector strips
- Direct marking
- Other versions (or variants) can be requested from WAGO Sales or configured at https://configurator.wago.com/.

PCB terminal block ▸ 256 Series

CAGE CLAMP® ▸ Actuation type: Finger-operated lever ▸ 2.5 mm² ▸ Color: gray

1

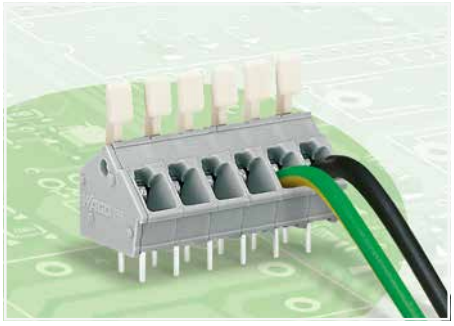

- PCB terminal blocks with push-buttons and CAGE CLAMP® connection
- Versions with Ex approval
- Set to metric or inch pin spacing by compressing PCB terminal strips or pulling them apart
- Ideal for in-the-field wiring thanks to simplified push-button actuation
- Convenient, tool-free operation

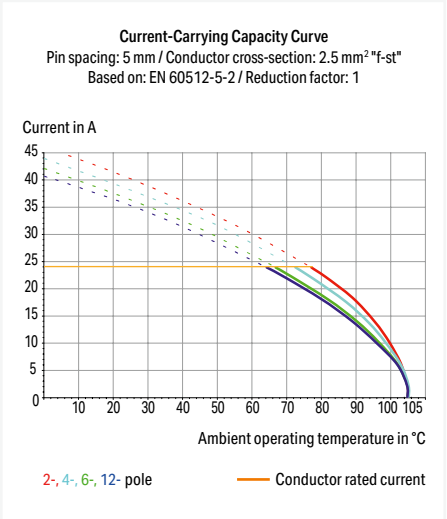

Electrical data									
Pin spacing	**5/5.08 mm / 0.197/0.2 inches**			**7.5/7.62 mm / 0.295/0.3 inches**			**10/10.16 mm / 0.394/0.4 inches**		
Ratings per	**IEC/EN 60664-1**			**IEC/EN 60664-1**			**IEC/EN 60664-1**		
Overvoltage category	III	III	II	III	III	II	III	III	II
Pollution degree	3	2	2	3	2	2	3	2	2
Nominal voltage	250 V	320 V	630 V	320 V	320 V	630 V	500 V	630 V	1000 V
Rated impulse withstand voltage	4 kV	4 kV	4 kV	4 kV	4 kV	4 kV	6 kV	6 kV	6 kV
Rated current	24 A	24 A	24 A	24 A	24 A	24 A	24 A	24 A	24 A
Approvals per	**UL 1059**			**UL 1059**			**UL 1059**		
Use group	B	C	D	B	C	D	B	C	D
Rated voltage	300 V	-	300 V	300 V	-	300 V	300 V	-	300 V
Rated current	15 A	-	10 A	15 A	-	10 A	15 A	-	10 A
Approvals per	**CSA**			**CSA**			**CSA**		
Use group	B	C	D	B	C	D	B	C	D
Rated voltage	300 V	-	300 V	300 V	-	300 V	300 V	-	300 V
Rated current	15 A	-	10 A	15 A	-	10 A	15 A	-	10 A

Connection Data	
Connection technology	CAGE CLAMP®
Strip length	5 … 6 mm / 0.2 … 0.24 inches
Conductor connection direction to PCB	45 °
Solid conductor	0.08 … 2.5 mm² / 28 … 12 AWG
Fine-stranded conductor	0.08 … 2.5 mm² / 28 … 12 AWG
Fine-stranded conductor; with insulated ferrule	0.25 … 1.5 mm²
Fine-stranded conductor; with uninsulated ferrule	0.25 … 1.5 mm²
Note (conductor cross-section)	12 AWG: THHN, THWN

Material data	
Material group	I
Insulation material (main housing)	Polyamide (PA66)
Flammability class per UL94	V0
Clamping spring material	Chrome-nickel spring steel (CrNi)
Contact material	Electrolytic copper (E_{Cu})
Contact Plating	Tin

Mechanical data	
Solder pin arrangement	over the entire terminal strip (in-line)
Number of solder pins per potential	2
Solder pin length	4 mm
Solder pin dimensions	0.7 x 0.7 mm
Drilled hole diameter	1.1 $^{(+0.1)}$ mm

Environmental requirements	
Limit temperature range	-60 … +105 °C

Ferrule	Page 1081
Marking	Page 1067
Test and measurement	Page 261
Custom commoning	Page 272
See technical section for further information	
Approvals and corresponding ratings, visit www.wago.com	

PCB terminal block ▸ 256 Series

CAGE CLAMP® ▸ Actuation type: Finger-operated lever ▸ 2.5 mm² ▸ Color: gray

Pin spacing: 5/5.08 mm / 0.197/0.2 inches



256-402/333-000

Pole number	Item No.	PU (SPU)
2	**256-402/333-000**	400 (100)
3	**256-403/333-000**	280 (70)
4	**256-404/333-000**	200 (50)
5	**256-405/333-000**	160 (40)
6	**256-406/333-000**	140 (35)
7	**256-407/333-000**	120 (30)
8	**256-408/333-000**	100 (25)
9	**256-409/333-000**	100 (25)
10	**256-410/333-000**	80 (20)
12	**256-412/333-000**	60 (15)

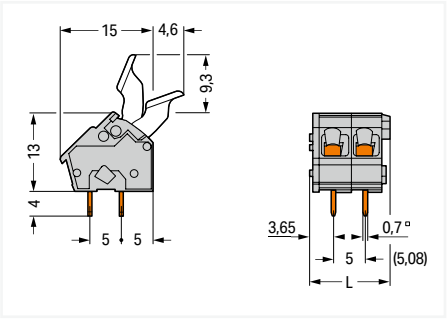

L = (pole no. x pin spacing) + 2.9 mm
For lengths greater than three poles, finger lever operation for center levers may not be possible due to finger size/ spacing limitations.

Pin spacing: 7.5/7.62 mm / 0.295/0.3 inches



256-502/333-000

Pole number	Item No.	PU (SPU)
2	**256-502/333-000**	280 (70)
3	**256-503/333-000**	180 (45)
4	**256-504/333-000**	140 (35)
5	**256-505/333-000**	120 (30)
6	**256-506/333-000**	100 (25)
7	**256-507/333-000**	80 (20)
8	**256-508/333-000**	60 (15)
9	**256-509/333-000**	60 (15)
10	**256-510/333-000**	60 (15)
12	**256-512/333-000**	40 (10)

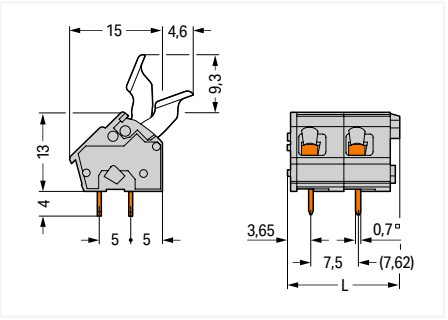

L = (pole no. x pin spacing) + 2.9 mm

Pin spacing: 10/10.16 mm / 0.394/0.4 inches



256-602/333-000

Pole number	Item No.	PU (SPU)
2	**256-602/333-000**	200 (50)
3	**256-603/333-000**	140 (35)
4	**256-604/333-000**	100 (25)
5	**256-605/333-000**	80 (20)
6	**256-606/333-000**	60 (15)
7	**256-607/333-000**	60 (15)
8	**256-608/333-000**	60 (15)
9	**256-609/333-000**	40 (10)
10	**256-610/333-000**	40 (10)
12	**256-612/333-000**	40 (10)

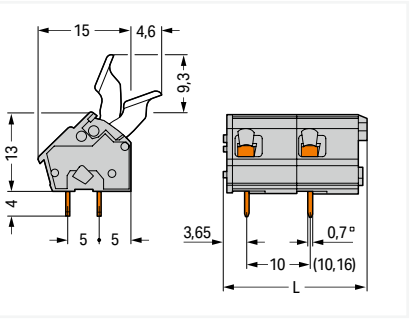

L = (pole no. x pin spacing) + 2.9 mm

PU = packaging unit; SPU = subpackaging unit; Dimensions in mm

Variants:
- Other pole numbers
- Versions for Ex e II and Ex i
- Other colors
- Mixed-color PCB connector strips
- Direct marking
- Other versions (or variants) can be requested from WAGO Sales or configured at https://configurator.wago.com/.

Stackable PCB terminal block ▸ 257 Series

CAGE CLAMP® ▸ Actuation type: Push-button ▸ 2.5 mm²

1

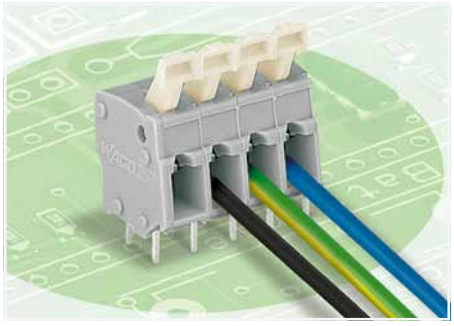

- PCB terminal blocks with push-buttons and CAGE CLAMP® connection
- Versions with Ex approval
- Set to metric or inch pin spacing by compressing PCB terminal strips or pulling them apart
- Ideal for in-the-field wiring thanks to simplified push-button actuation
- Convenient, tool-free operation

Current-Carrying Capacity Curve

Pin spacing: 5 mm / Conductor cross-section: 2.5 mm² "f-st"
Based on: EN 60512-5-2 / Reduction factor: 1

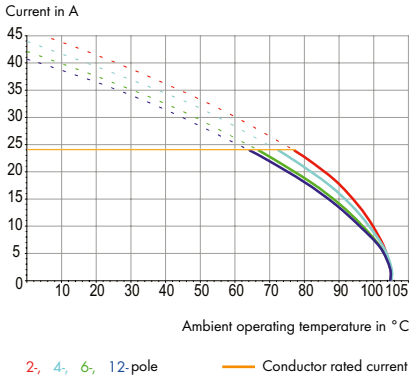

Electrical data									
Pin spacing	**5/5.08 mm / 0.197/0.2 inches**			**7.5/7.62 mm / 0.295/0.3 inches**			**10/10.16 mm / 0.394/0.4 inches**		
Color	**gray; blue; orange; light gray; light green; red; dark gray**			**gray; blue; orange; light gray; light green; red; dark gray**			**blue; orange; light gray; light green; red; dark gray**		
Ratings per	**IEC/EN 60664-1**			**IEC/EN 60664-1**			**IEC/EN 60664-1**		
Overvoltage category	III	III	II	III	III	II	III	III	II
Pollution degree	3	2	2	3	2	2	3	2	2
Nominal voltage	250 V	320 V	630 V	400 V	630 V	1000 V	630 V	1000 V	1000 V
Rated impulse withstand voltage	4 kV	4 kV	4 kV	6 kV	6 kV	6 kV	8 kV	8 kV	8 kV
Rated current	24 A	24 A	24 A	24 A	24 A	24 A	24 A	24 A	24 A
Approvals per	**UL 1059**			**UL 1059**			**UL 1059**		
Use group	B	C	D	B	C	D	B	C	D
Rated voltage	300 V	-	300 V	300 V	-	300 V	300 V	-	300 V
Rated current	15 A	-	10 A	15 A	-	10 A	15 A	-	10 A
Approvals per	**CSA**			**CSA**			**CSA**		
Use group	B	C	D	B	C	D	B	C	D
Rated voltage	300 V	-	300 V	300 V	-	300 V	300 V	-	300 V
Rated current	15 A	-	10 A	15 A	-	10 A	15 A	-	10 A

Connection Data	
Connection technology	CAGE CLAMP®
Strip length	5 … 6 mm / 0.2 … 0.24 inches
Conductor connection direction to PCB	0 °
Solid conductor	0.08 … 2.5 mm² / 28 … 12 AWG
Fine-stranded conductor	0.08 … 2.5 mm² / 28 … 12 AWG
Fine-stranded conductor; with insulated ferrule	0.25 … 1.5 mm²
Fine-stranded conductor; with uninsulated ferrule	0.25 … 1.5 mm²
Note (conductor cross-section)	12 AWG: THHN, THWN

Material data	
Material group	I
Insulation material (main housing)	Polyamide (PA66)
Flammability class per UL94	V0
Clamping spring material	Chrome-nickel spring steel (CrNi)
Contact material	Electrolytic copper (E_{Cu})
Contact Plating	Tin

Mechanical data	
Solder pin arrangement	within the terminal block (in-line)
Number of solder pins per potential	2
Solder pin length	4 mm
Solder pin dimensions	0.7 x 0.7 mm
Drilled hole diameter	1.1 $^{(+0.1)}$ mm

Environmental requirements	
Limit temperature range	-60 … +105 °C

Ferrule	Page 1081
Marking	Page 1067
Test and measurement	Page 261
Tool	Page 1072
Custom commoning	Page 272
See technical section for further information	
Approvals and corresponding ratings, visit www.wago.com	

Stackable PCB terminal block ▸ 257 Series

CAGE CLAMP® ▸ Actuation type: Push-button ▸ 2.5 mm²

Pin spacing: 5/5.08 mm / 0.197/0.2 inches



257-401

Color	Item No.	PU (SPU)
gray	**257-401**	500 (100)
blue	**257-744**	500 (100)
orange	**257-746**	500 (100)
light gray	**257-743**	500 (100)
light green	**257-747**	500 (100)
red	**257-740**	500 (100)
dark gray	**257-742**	500 (100)

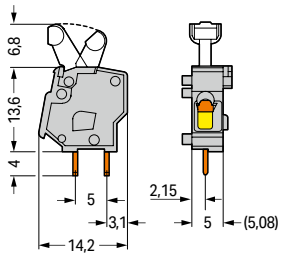

Pin spacing: 7.5/7.62 mm / 0.295/0.3 inches



257-501

Color	Item No.	PU (SPU)
gray	**257-501**	400 (100)
blue	**257-754**	400 (100)
orange	**257-756**	400 (100)
light gray	**257-753**	400 (100)
light green	**257-757**	400 (100)
red	**257-750**	400 (100)
dark gray	**257-752**	400 (100)

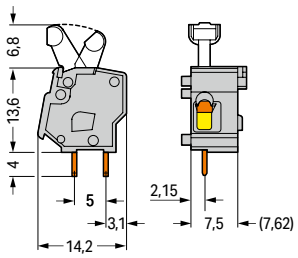

Pin spacing: 10/10.16 mm / 0.394/0.4 inches



257-601

Color	Item No.	PU (SPU)
blue	**257-764**	300 (100)
orange	**257-766**	300 (100)
light gray	**257-763**	300 (100)
light green	**257-767**	300 (100)
red	**257-760**	300 (100)
dark gray	**257-762**	300 (100)

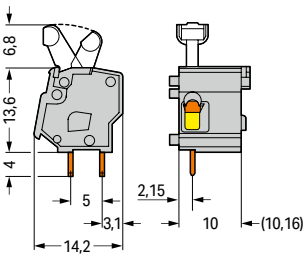

Accessories; for all products on this page



End plate; Width: 1 mm; snap-on type

Color	Item No.	PU (SPU)
gray	**257-100**	2000 (100)
blue	**257-400**	2000 (100)
orange	**257-600**	2000 (100)
light gray	**257-300**	2000 (100)
light green	**257-700**	2000 (100)
red	**257-500**	2000 (100)
dark gray	**257-200**	2000 (100)



Intermediate plate; extends pin spacing; Width: 10.16 mm / 0.4 inches



Intermediate plate; extends pin spacing; Width: 5.08 mm / 0.2 inches



Intermediate plate; extends pin spacing; Width: 7.62 mm / 0.3 inches

PU = packaging unit; SPU = subpackaging unit; Dimensions in mm

Variants:

- Other colors
- Versions for Ex e II and Ex i
- Other versions (or variants) can be requested from WAGO Sales or configured at https://configurator.wago.com/.

PCB terminal block ▸ 257 Series

CAGE CLAMP® ▸ Actuation type: Push-button ▸ 2.5 mm² ▸ Color: gray

1

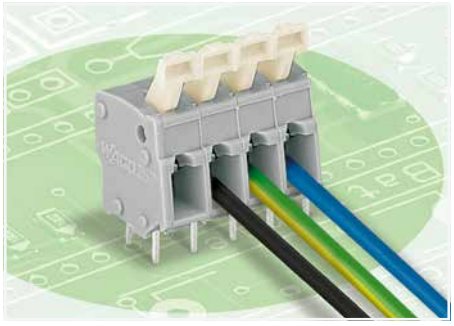

- PCB terminal blocks with push-buttons and CAGE CLAMP® connection
- Versions with Ex approval
- Set to metric or inch pin spacing by compressing PCB terminal strips or pulling them apart
- Ideal for in-the-field wiring thanks to simplified push-button actuation
- Convenient, tool-free operation

Current-Carrying Capacity Curve

Pin spacing: 5 mm / Conductor cross-section: 2.5 mm² "f-st"
Based on: EN 60512-5-2 / Reduction factor: 1

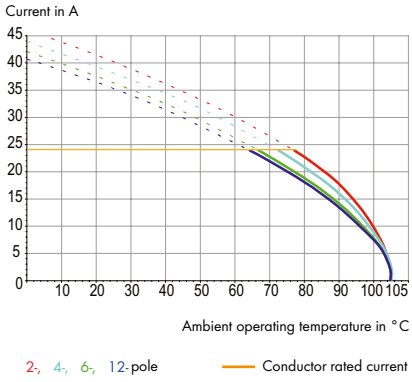

Electrical data									
Pin spacing	**5/5.08 mm / 0.197/0.2 inches**			**7.5/7.62 mm / 0.295/0.3 inches**			**10/10.16 mm / 0.394/0.4 inches**		
Ratings per	**IEC/EN 60664-1**			**IEC/EN 60664-1**			**IEC/EN 60664-1**		
Overvoltage category	III	III	II	III	III	II	III	III	II
Pollution degree	3	2	2	3	2	2	3	2	2
Nominal voltage	250 V	320 V	630 V	400 V	630 V	1000 V	630 V	1000 V	1000 V
Rated impulse withstand voltage	4 kV	4 kV	4 kV	6 kV	6 kV	6 kV	8 kV	8 kV	8 kV
Rated current	24 A	24 A	24 A	24 A	24 A	24 A	24 A	24 A	24 A
Approvals per	**UL 1059**			**UL 1059**			**UL 1059**		
Use group	B	C	D	B	C	D	B	C	D
Rated voltage	300 V	-	300 V	300 V	-	300 V	300 V	-	300 V
Rated current	15 A	-	10 A	15 A	-	10 A	15 A	-	10 A
Approvals per	**CSA**			**CSA**			**CSA**		
Use group	B	C	D	B	C	D	B	C	D
Rated voltage	300 V	-	300 V	300 V	-	300 V	300 V	-	300 V
Rated current	15 A	-	10 A	15 A	-	10 A	15 A	-	10 A

Connection Data	
Connection technology	CAGE CLAMP®
Strip length	5 … 6 mm / 0.2 … 0.24 inches
Conductor connection direction to PCB	0 °
Solid conductor	0.08 … 2.5 mm² / 28 … 12 AWG
Fine-stranded conductor	0.08 … 2.5 mm² / 28 … 12 AWG
Fine-stranded conductor; with insulated ferrule	0.25 … 1.5 mm²
Fine-stranded conductor; with uninsulated ferrule	0.25 … 1.5 mm²
Note (conductor cross-section)	12 AWG: THHN, THWN

Material data	
Material group	I
Insulation material (main housing)	Polyamide (PA66)
Flammability class per UL94	V0
Clamping spring material	Chrome-nickel spring steel (CrNi)
Contact material	Electrolytic copper (E_{Cu})
Contact Plating	Tin

Mechanical data	
Solder pin arrangement	over the entire terminal strip (in-line)
Number of solder pins per potential	2
Solder pin length	4 mm
Solder pin dimensions	0.7 x 0.7 mm
Drilled hole diameter	1.1 $^{(+0.1)}$ mm

Environmental requirements	
Limit temperature range	-60 … +105 °C

Ferrule	Page 1081
Marking	Page 1067
Test and measurement	Page 261
Tool	Page 1072
Custom commoning	Page 272
See technical section for further information	
Approvals and corresponding ratings, visit www.wago.com	

PCB terminal block ▸ 257 Series

CAGE CLAMP® ▸ Actuation type: Push-button ▸ 2.5 mm² ▸ Color: gray

Pin spacing: 5/5.08 mm / 0.197/0.2 inches

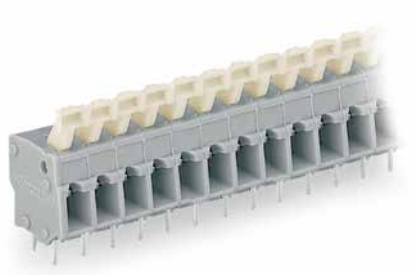

257-412

Pole number	Item No.	PU (SPU)
2	257-402	400 (100)
3	257-403	280 (70)
4	257-404	220 (55)
5	257-405	180 (45)
6	257-406	140 (35)
7	257-407	120 (30)
8	257-408	100 (25)
9	257-409	100 (25)
10	257-410	80 (20)
12	257-412	80 (20)

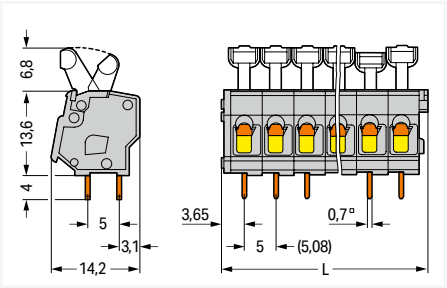

L = (pole no. x pin spacing) + 2.9 mm

Pin spacing: 7.5/7.62 mm / 0.295/0.3 inches

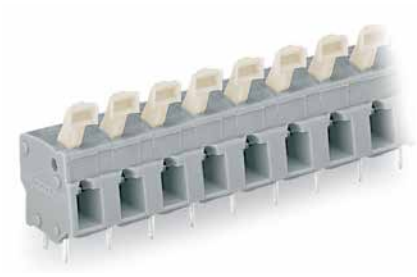

257-508

Pole number	Item No.	PU (SPU)
2	257-502	280 (70)
3	257-503	200 (50)
4	257-504	140 (35)
5	257-505	120 (30)
6	257-506	100 (25)
7	257-507	80 (20)
8	257-508	80 (20)
9	257-509	60 (15)
10	257-510	60 (15)
12	257-512	40 (10)

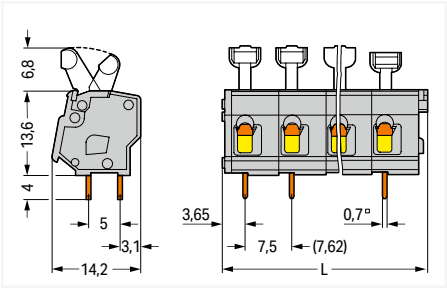

L = (pole no. x pin spacing) + 2.9 mm

Pin spacing: 10/10.16 mm / 0.394/0.4 inches



257-606

Pole number	Item No.	PU (SPU)
2	257-602	200 (50)
3	257-603	140 (35)
4	257-604	100 (25)
5	257-605	80 (20)
6	257-606	80 (20)
7	257-607	60 (15)
8	257-608	60 (15)
9	257-609	40 (10)
10	257-610	40 (10)
12	257-612	40 (10)

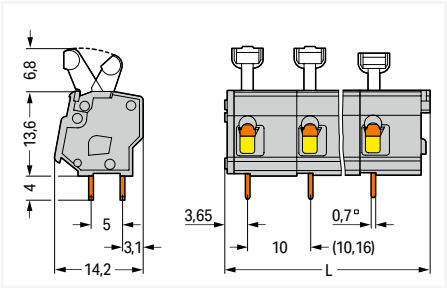

L = (pole no. x pin spacing) + 2.9 mm

PU = packaging unit; SPU = subpackaging unit; Dimensions in mm

Variants:

- Other pole numbers
- Versions for Ex e II and Ex i
- Other colors
- Mixed-color PCB connector strips
- Direct marking
- Other versions (or variants) can be requested from WAGO Sales or configured at https://configurator.wago.com/.

Stackable PCB terminal block ▸ 257 Series

CAGE CLAMP® ▸ Actuation type: Push-button (angled) ▸ 2.5 mm²

1

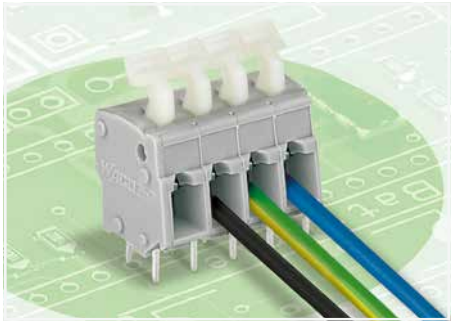

- PCB terminal blocks with push-buttons and CAGE CLAMP® connection
- Versions with Ex approval
- Set to metric or inch pin spacing by compressing PCB terminal strips or pulling them apart
- Ideal for in-the-field wiring thanks to simplified push-button actuation
- Convenient, tool-free operation

Current-Carrying Capacity Curve

Pin spacing: 5 mm / Conductor cross-section: 2.5 mm² "f-st"
Based on: EN 60512-5-2 / Reduction factor: 1

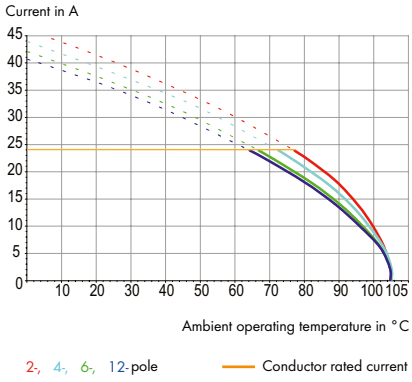

Electrical data									
Pin spacing	**5/5.08 mm / 0.197/0.2 inches**			**7.5/7.62 mm / 0.295/0.3 inches**			**10/10.16 mm / 0.394/0.4 inches**		
Ratings per	**IEC/EN 60664-1**			**IEC/EN 60664-1**			**IEC/EN 60664-1**		
Overvoltage category	III	III	II	III	III	II	III	III	II
Pollution degree	3	2	2	3	2	2	3	2	2
Nominal voltage	250 V	320 V	630 V	400 V	630 V	1000 V	630 V	1000 V	1000 V
Rated impulse withstand voltage	4 kV	4 kV	4 kV	6 kV	6 kV	6 kV	8 kV	8 kV	8 kV
Rated current	24 A	24 A	24 A	24 A	24 A	24 A	24 A	24 A	24 A
Approvals per	**UL 1059**			**UL 1059**			**UL 1059**		
Use group	B	C	D	B	C	D	B	C	D
Rated voltage	300 V	-	300 V	300 V	-	300 V	300 V	-	300 V
Rated current	15 A	-	10 A	15 A	-	10 A	15 A	-	10 A
Approvals per	**CSA**			**CSA**			**CSA**		
Use group	B	C	D	B	C	D	B	C	D
Rated voltage	300 V	-	300 V	300 V	-	300 V	300 V	-	300 V
Rated current	15 A	-	10 A	15 A	-	10 A	15 A	-	10 A

Connection Data	
Connection technology	CAGE CLAMP®
Strip length	5 … 6 mm / 0.2 … 0.24 inches
Conductor connection direction to PCB	0 °
Solid conductor	0.08 … 2.5 mm² / 28 … 12 AWG
Fine-stranded conductor	0.08 … 2.5 mm² / 28 … 12 AWG
Fine-stranded conductor; with insulated ferrule	0.25 … 1.5 mm²
Fine-stranded conductor; with uninsulated ferrule	0.25 … 1.5 mm²
Note (conductor cross-section)	12 AWG: THHN, THWN

Material data	
Material group	I
Insulation material (main housing)	Polyamide (PA66)
Flammability class per UL94	V0
Clamping spring material	Chrome-nickel spring steel (CrNi)
Contact material	Electrolytic copper (E_{Cu})
Contact Plating	Tin

Mechanical data	
Solder pin arrangement	within the terminal block (in-line)
Number of solder pins per potential	2
Solder pin length	4 mm
Solder pin dimensions	0.7 x 0.7 mm
Drilled hole diameter	1.1 $^{(+0.1)}$ mm

Environmental requirements	
Limit temperature range	-60 … +105 °C

Ferrule	Page 1081
Marking	Page 1067
Test and measurement	Page 261
Tool	Page 1072
Custom commoning	Page 272
See technical section for further information	
Approvals and corresponding ratings, visit www.wago.com	

Stackable PCB terminal block ▸ 257 Series

CAGE CLAMP® ▸ Actuation type: Push-button (angled) ▸ 2.5 mm²

1

Pin spacing: 5/5.08 mm / 0.197/0.2 inches



257-451

Color	Item No.	PU (SPU)
gray	257-451	500 (100)
blue	257-844	500 (100)
orange	257-846	500 (100)
light gray	257-843	500 (100)
light green	257-847	500 (100)
red	257-840	500 (100)
dark gray	257-842	500 (100)

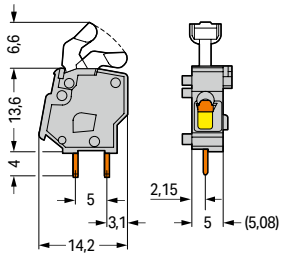

Pin spacing: 7.5/7.62 mm / 0.295/0.3 inches



257-551

Color	Item No.	PU (SPU)
gray	257-551	400 (100)
blue	257-854	400 (100)
orange	257-856	400 (100)
light gray	257-853	400 (100)
light green	257-857	400 (100)
red	257-850	400 (100)
dark gray	257-852	400 (100)

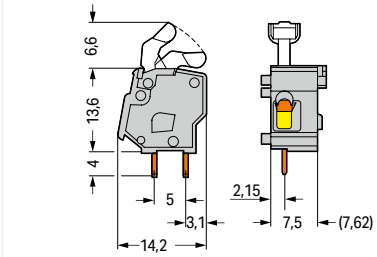

Pin spacing: 10/10.16 mm / 0.394/0.4 inches



257-651

Color	Item No.	PU (SPU)
gray	257-651	300 (100)
blue	257-864	300 (100)
orange	257-866	300 (100)
light gray	257-863	300 (100)
light green	257-867	300 (100)
red	257-860	300 (100)
dark gray	257-862	300 (100)

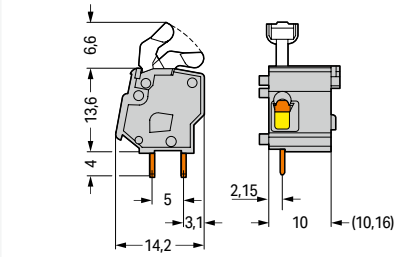

Accessories; for all products on this page



End plate; Width: 1 mm; snap-on type

Color	Item No.	PU (SPU)
gray	257-100	2000 (100)
blue	257-400	2000 (100)
orange	257-600	2000 (100)
light gray	257-300	2000 (100)
light green	257-700	2000 (100)
red	257-500	2000 (100)
dark gray	257-200	2000 (100)



Intermediate plate; extends pin spacing; Width: 10.16 mm / 0.4 inches



Intermediate plate; extends pin spacing; Width: 5.08 mm / 0.2 inches



Intermediate plate; extends pin spacing; Width: 7.62 mm / 0.3 inches

PU = packaging unit; SPU = subpackaging unit; Dimensions in mm

Variants:

- Other colors
- Versions for Ex e II and Ex i
- Other versions (or variants) can be requested from WAGO Sales or configured at https://configurator.wago.com/.

PCB terminal block ▸ 257 Series

CAGE CLAMP® ▸ Actuation type: Push-button (angled) ▸ 2.5 mm² ▸ Color: gray

1

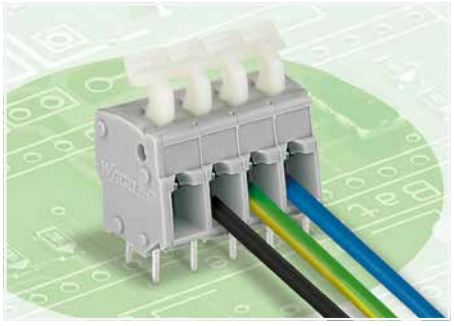

- PCB terminal blocks with push-buttons and CAGE CLAMP® connection
- Versions with Ex approval
- Set to metric or inch pin spacing by compressing PCB terminal strips or pulling them apart
- Ideal for in-the-field wiring thanks to simplified push-button actuation
- Convenient, tool-free operation

Current-Carrying Capacity Curve

Pin spacing: 5 mm / Conductor cross-section: 2.5 mm² "f-st"
Based on: EN 60512-5-2 / Reduction factor: 1

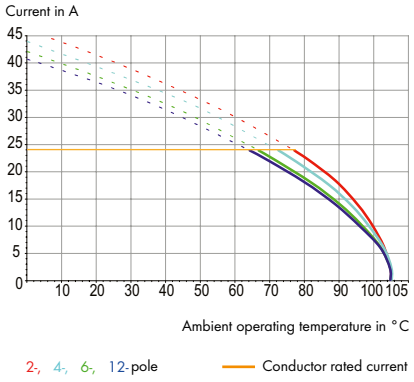

Electrical data									
Pin spacing	**5/5.08 mm / 0.197/0.2 inches**			**7.5/7.62 mm / 0.295/0.3 inches**			**10/10.16 mm / 0.394/0.4 inches**		
Ratings per	**IEC/EN 60664-1**			**IEC/EN 60664-1**			**IEC/EN 60664-1**		
Overvoltage category	III	III	II	III	III	II	III	III	II
Pollution degree	3	2	2	3	2	2	3	2	2
Nominal voltage	250 V	320 V	630 V	400 V	630 V	1000 V	630 V	1000 V	1000 V
Rated impulse withstand voltage	4 kV	4 kV	4 kV	6 kV	6 kV	6 kV	8 kV	8 kV	8 kV
Rated current	24 A	24 A	24 A	24 A	24 A	24 A	24 A	24 A	24 A
Approvals per	**UL 1059**			**UL 1059**			**UL 1059**		
Use group	B	C	D	B	C	D	B	C	D
Rated voltage	300 V	-	300 V	300 V	-	300 V	300 V	-	300 V
Rated current	15 A	-	10 A	15 A	-	10 A	15 A	-	10 A
Approvals per	**CSA**			**CSA**			**CSA**		
Use group	B	C	D	B	C	D	B	C	D
Rated voltage	300 V	-	300 V	300 V	-	300 V	300 V	-	300 V
Rated current	15 A	-	10 A	15 A	-	10 A	15 A	-	10 A

Connection Data	
Connection technology	CAGE CLAMP®
Strip length	5 … 6 mm / 0.2 … 0.24 inches
Conductor connection direction to PCB	0 °
Solid conductor	0.08 … 2.5 mm² / 28 … 12 AWG
Fine-stranded conductor	0.08 … 2.5 mm² / 28 … 12 AWG
Fine-stranded conductor; with insulated ferrule	0.25 … 1.5 mm²
Fine-stranded conductor; with uninsulated ferrule	0.25 … 1.5 mm²
Note (conductor cross-section)	12 AWG: THHN, THWN

Material data	
Material group	I
Insulation material (main housing)	Polyamide (PA66)
Flammability class per UL94	V0
Clamping spring material	Chrome-nickel spring steel (CrNi)
Contact material	Electrolytic copper (E_{Cu})
Contact Plating	Tin

Mechanical data	
Solder pin arrangement	over the entire terminal strip (in-line)
Number of solder pins per potential	2
Solder pin length	4 mm
Solder pin dimensions	0.7 x 0.7 mm
Drilled hole diameter	1.1 $^{(+0.1)}$ mm

Environmental requirements	
Limit temperature range	-60 … +105 °C

Ferrule	Page 1081
Marking	Page 1067
Test and measurement	Page 261
Tool	Page 1072
Custom commoning	Page 272
See technical section for further information	
Approvals and corresponding ratings, visit www.wago.com	

PCB terminal block ▸ 257 Series

CAGE CLAMP® ▸ Actuation type: Push-button (angled) ▸ 2.5 mm² ▸ Color: gray

Pin spacing: 5/5.08 mm / 0.197/0.2 inches



257-462

Pole number	Item No.	PU (SPU)
2	257-452	400 (100)
3	257-453	280 (70)
4	257-454	220 (55)
5	257-455	180 (45)
6	257-456	140 (35)
7	257-457	120 (30)
8	257-458	100 (25)
9	257-459	100 (25)
10	257-460	80 (20)
12	257-462	80 (20)

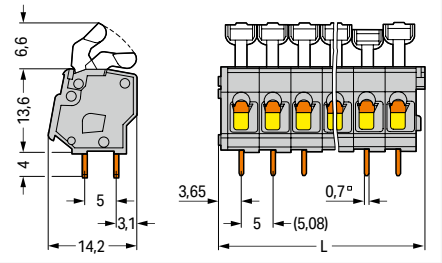

L = (pole no. x pin spacing) + 2.9 mm

Pin spacing: 7.5/7.62 mm / 0.295/0.3 inches

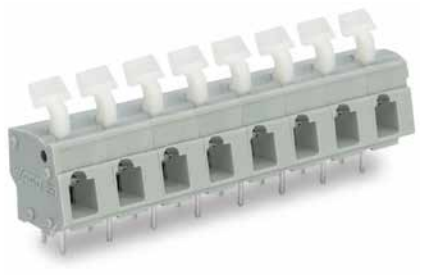

257-558

Pole number	Item No.	PU (SPU)
2	257-552	280 (70)
3	257-553	200 (50)
4	257-554	140 (35)
5	257-555	120 (30)
6	257-556	100 (25)
7	257-557	80 (20)
8	257-558	80 (20)
9	257-559	60 (15)
10	257-560	60 (15)
12	257-562	40 (10)

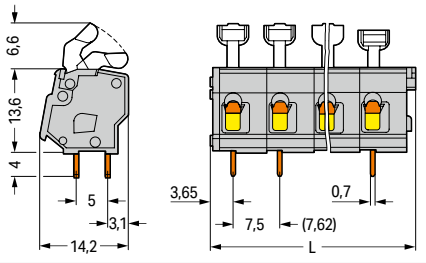

L = (pole no. x pin spacing) + 2.9 mm

Pin spacing: 10/10.16 mm / 0.394/0.4 inches

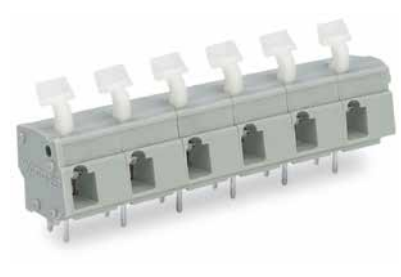

257-656

Pole number	Item No.	PU (SPU)
2	257-652	220 (55)
3	257-653	140 (35)
4	257-654	100 (25)
5	257-655	80 (20)
6	257-656	80 (20)
7	257-657	60 (15)
8	257-658	60 (15)
9	257-659	40 (10)
10	257-660	40 (10)
12	257-662	40 (10)

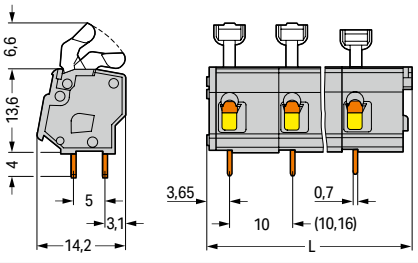

L = (pole no. x pin spacing) + 2.9 mm

PU = packaging unit; SPU = subpackaging unit; Dimensions in mm

Variants:

- Other pole numbers
- Versions for Ex e II and Ex i
- Other colors
- Mixed-color PCB connector strips
- Direct marking
- Other versions (or variants) can be requested from WAGO Sales or configured at https://configurator.wago.com/.

PCB terminal block ▸ 257 Series

CAGE CLAMP® ▸ Actuation type: Finger-operated lever ▸ 2.5 mm² ▸ Color: gray

1

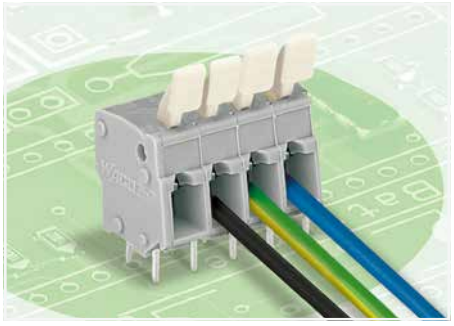

- PCB terminal blocks with push-buttons and CAGE CLAMP® connection
- Versions with Ex approval
- Set to metric or inch pin spacing by compressing PCB terminal strips or pulling them apart
- Ideal for in-the-field wiring thanks to simplified push-button actuation
- Convenient, tool-free operation

Current-Carrying Capacity Curve

Pin spacing: 5 mm / Conductor cross-section: 2.5 mm² "f-st"
Based on: EN 60512-5-2 / Reduction factor: 1

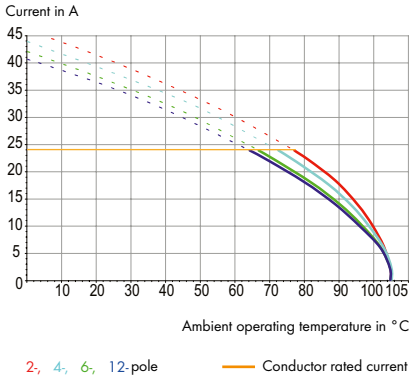

Electrical data									
Pin spacing	**5/5.08 mm / 0.197/0.2 inches**			**7.5/7.62 mm / 0.295/0.3 inches**			**10/10.16 mm / 0.394/0.4 inches**		
Ratings per	**IEC/EN 60664-1**			**IEC/EN 60664-1**			**IEC/EN 60664-1**		
Overvoltage category	III	III	II	III	III	II	III	III	II
Pollution degree	3	2	2	3	2	2	3	2	2
Nominal voltage	250 V	320 V	630 V	400 V	630 V	1000 V	630 V	1000 V	1000 V
Rated impulse withstand voltage	4 kV	4 kV	4 kV	6 kV	6 kV	6 kV	8 kV	8 kV	8 kV
Rated current	24 A	24 A	24 A	24 A	24 A	24 A	24 A	24 A	24 A
Approvals per	**UL 1059**			**UL 1059**			**UL 1059**		
Use group	B	C	D	B	C	D	B	C	D
Rated voltage	300 V	-	300 V	300 V	-	300 V	300 V	-	300 V
Rated current	15 A	-	10 A	15 A	-	10 A	15 A	-	10 A
Approvals per	**CSA**			**CSA**			**CSA**		
Use group	B	C	D	B	C	D	B	C	D
Rated voltage	300 V	-	300 V	300 V	-	300 V	300 V	-	300 V
Rated current	15 A	-	10 A	15 A	-	10 A	15 A	-	10 A

Connection Data	
Connection technology	CAGE CLAMP®
Strip length	5 … 6 mm / 0.2 … 0.24 inches
Conductor connection direction to PCB	0 °
Solid conductor	0.08 … 2.5 mm² / 28 … 12 AWG
Fine-stranded conductor	0.08 … 2.5 mm² / 28 … 12 AWG
Fine-stranded conductor; with insulated ferrule	0.25 … 1.5 mm²
Fine-stranded conductor; with uninsulated ferrule	0.25 … 1.5 mm²
Note (conductor cross-section)	12 AWG: THHN, THWN

Material data	
Material group	I
Insulation material (main housing)	Polyamide (PA66)
Flammability class per UL94	V0
Clamping spring material	Chrome-nickel spring steel (CrNi)
Contact material	Electrolytic copper (E_{Cu})
Contact Plating	Tin

Mechanical data	
Solder pin arrangement	over the entire terminal strip (in-line)
Number of solder pins per potential	2
Solder pin length	4 mm
Solder pin dimensions	0.7 x 0.7 mm
Drilled hole diameter	1.1 $^{(+0.1)}$ mm

Environmental requirements	
Limit temperature range	-60 … +105 °C

Ferrule	Page 1081
Marking	Page 1067
Test and measurement	Page 261
Custom commoning	Page 272
See technical section for further information	
Approvals and corresponding ratings, visit www.wago.com	

PCB terminal block ▸ 257 Series

CAGE CLAMP® ▸ Actuation type: Finger-operated lever ▸ 2.5 mm² ▸ Color: gray

Pin spacing: 5/5.08 mm / 0.197/0.2 inches



257-402/333-000

Pole number	Item No.	PU (SPU)
2	257-402/333-000	400 (100)
3	257-403/333-000	280 (70)
4	257-404/333-000	220 (55)
5	257-405/333-000	180 (45)
6	257-406/333-000	140 (35)
7	257-407/333-000	120 (30)
8	257-408/333-000	100 (25)
9	257-409/333-000	100 (25)
10	257-410/333-000	80 (20)
12	257-412/333-000	80 (20)

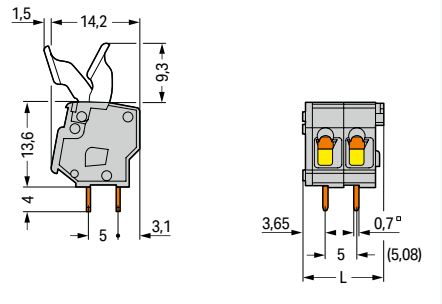

L = (pole no. x pin spacing) + 2.9 mm
For lengths greater than three poles, finger lever operation for center levers may not be possible due to finger size/ spacing limitations.

Pin spacing: 7.5/7.62 mm / 0.295/0.3 inches



257-502/333-000

Pole number	Item No.	PU (SPU)
2	257-502/333-000	280 (70)
3	257-503/333-000	200 (50)
4	257-504/333-000	140 (35)
5	257-505/333-000	120 (30)
6	257-506/333-000	100 (25)
7	257-507/333-000	80 (20)
8	257-508/333-000	80 (20)
9	257-509/333-000	60 (15)
10	257-510/333-000	60 (15)
12	257-512/333-000	40 (10)

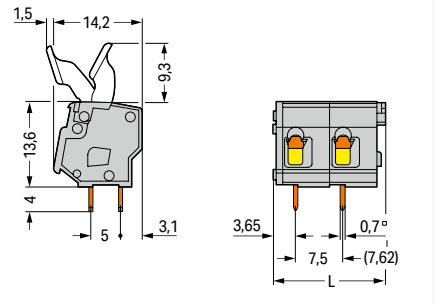

L = (pole no. x pin spacing) + 2.9 mm

Pin spacing: 10/10.16 mm / 0.394/0.4 inches



257-602/333-000

Pole number	Item No.	PU (SPU)
2	257-602/333-000	220 (55)
3	257-603/333-000	140 (35)
4	257-604/333-000	100 (25)
5	257-605/333-000	80 (20)
6	257-606/333-000	80 (20)
7	257-607/333-000	60 (15)
8	257-608/333-000	60 (15)
9	257-609/333-000	40 (10)
10	257-610/333-000	40 (10)
12	257-612/333-000	40 (10)

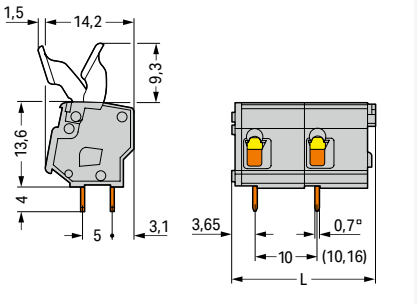

L = (pole no. x pin spacing) + 2.9 mm

PU = packaging unit; SPU = subpackaging unit; Dimensions in mm

Variants:

- Other pole numbers
- Versions for Ex e II and Ex i
- Other colors
- Mixed-color PCB connector strips
- Direct marking
- Other versions (or variants) can be requested from WAGO Sales or configured at https://configurator.wago.com/.

2706 and 2716 Series
Description and Installation



To open the clamping unit, pull the operating lever all the way back – 2706 and 2716 Series.



Inserting/removing a conductor – 2706 and 2716 Series.

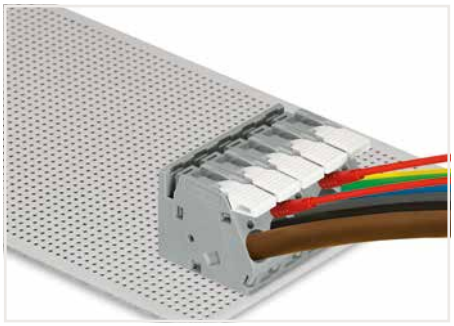

Testing with test plug – 2706 and 2716 Series.

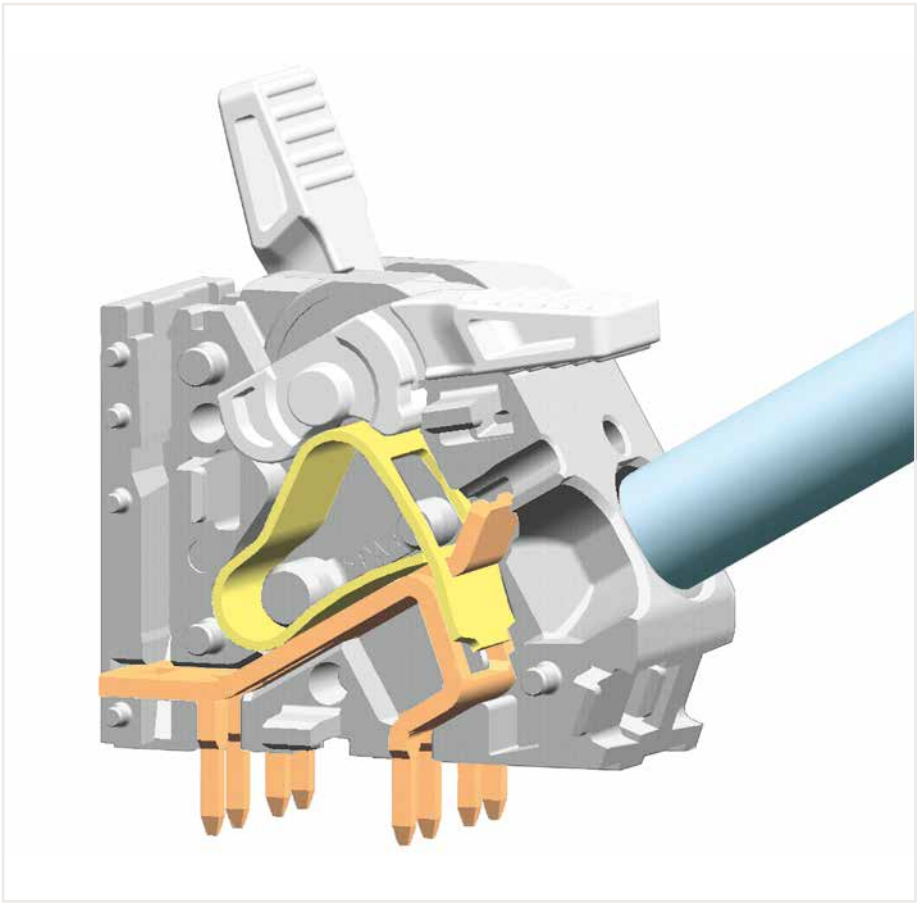

2706 and 2716 Series



Insert the comb-style jumper bar.

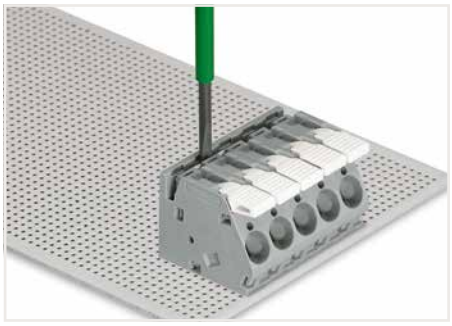

Push jumper bar down firmly using a screwdriver until it hits the backstop – 2706 and 2716 Series.

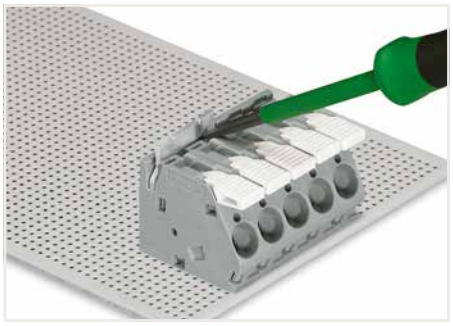

To remove the comb-style jumper bar, lift it up using a screwdriver – 2706 and 2716 Series.

PCB terminal block ▸ 2706 Series

CAGE CLAMP® ▸ Actuation type: Lever ▸ 6 mm² ▸ Color: gray

1



- High-current PCB terminal strips with lever-actuated CAGE CLAMP® connection
- Tool-free termination – fingers open/close levers
- Several clamping units can be held open simultaneously, simplifying the connection of multi-core cables
- Two solder pins per contact point for high mechanical stability
- 600 V UL for 12.5 mm pin spacing

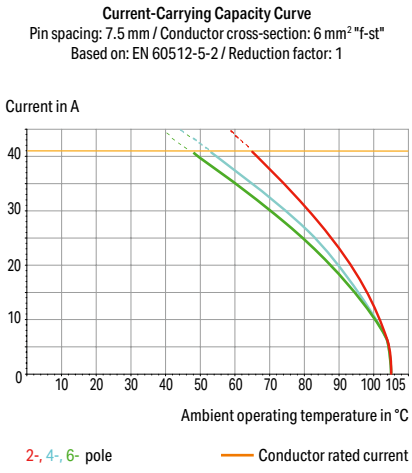

Electrical data									
Pin spacing	**7.5 mm / 0.295 inches**			**10 mm / 0.394 inches**			**12.5 mm / 0.492 inches**		
Ratings per	**IEC/EN 60664-1**			**IEC/EN 60664-1**			**IEC/EN 60664-1**		
Overvoltage category	III	III	II	III	III	II	III	III	II
Pollution degree	3	2	2	3	2	2	3	2	2
Nominal voltage	500 V	630 V	1000 V	800 V	1000 V	1000 V	1000 V	1000 V	1000 V
Rated impulse withstand voltage	6 kV	6 kV	6 kV	8 kV	8 kV	8 kV	8 kV	8 kV	8 kV
Rated current	41 A	41 A	41 A	41 A	41 A	41 A	41 A	41 A	41 A
Approvals per	**UL 1059**			**UL 1059**			**UL 1059**		
Use group	B	C	D	B	C	D	B	C	D
Rated voltage	300 V	150 V	300 V	300 V	150 V	600 V	300 V	600 V	-
Rated current	30 A	30 A	30 A	30 A	30 A	5 A	30 A	30 A	-

Connection Data	
Connection technology	CAGE CLAMP®
Strip length	11 … 12 mm / 0.43 … 0.47 inches
Conductor connection direction to PCB	30 °
Solid conductor	0.5 … 6 mm² / 20 … 10 AWG
Fine-stranded conductor	0.5 … 6 mm² / 20 … 10 AWG
Fine-stranded conductor; with insulated ferrule	0.5 … 6 mm²
Fine-stranded conductor; with uninsulated ferrule	0.5 … 6 mm²

Material data	
Material group	I
Insulation material (main housing)	Polyamide (PA66)
Flammability class per UL94	V0
Clamping spring material	Chrome-nickel spring steel (CrNi)
Contact material	Electrolytic copper (E_{Cu})
Contact Plating	Tin

Mechanical data	
Solder pin arrangement	over the entire terminal strip (in-line)
Number of solder pins per potential	2
Solder pin length	4.5 mm
Solder pin dimensions	1 x 1.4 mm
Drilled hole diameter	1.8 $^{(+0.1)}$ mm

Environmental requirements	
Limit temperature range	-60 … +105 °C

Ferrule Page 1081
Test and measurement Page 1088
See technical section for further information
Approvals and corresponding ratings, visit www.wago.com

PCB terminal block ▸ 2706 Series

CAGE CLAMP® ▸ Actuation type: Lever ▸ 6 mm² ▸ Color: gray

Pin spacing: 7.5 mm / 0.295 inches



2706-104

Pole number	Item No.	PU
2	2706-102	85
3	2706-103	55
4	2706-104	40
5	2706-105	30
6	2706-106	25
7	2706-107	20
8	2706-108	20
9	2706-109	15
10	2706-110	15
11	2706-111	15
12	2706-112	10

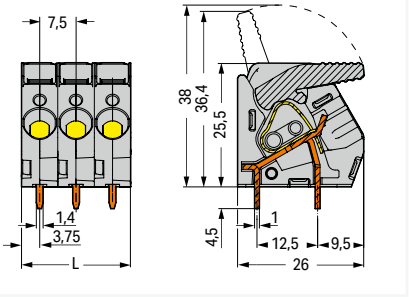

L = pole no. x pin spacing

Pin spacing: 10 mm / 0.394 inches



2706-204

Pole number	Item No.	PU
2	2706-202	70
3	2706-203	45
4	2706-204	30
5	2706-205	25
6	2706-206	20
7	2706-207	15
8	2706-208	15
9	2706-209	10
10	2706-210	10
11	2706-211	10
12	2706-212	10

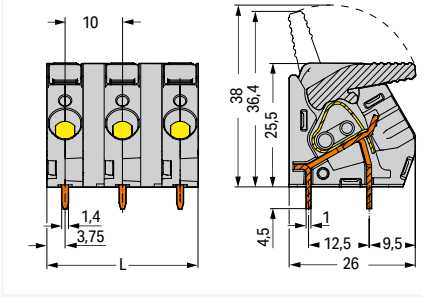

L = (pole no. x pin spacing) – 2.5 mm

Pin spacing: 12.5 mm / 0.492 inches



2706-304

Pole number	Item No.	PU
2	2706-302	65
3	2706-303	40
4	2706-304	25
5	2706-305	20
6	2706-306	15
7	2706-307	15
8	2706-308	10
9	2706-309	10
10	2706-310	10
11	2706-311	5
12	2706-312	5

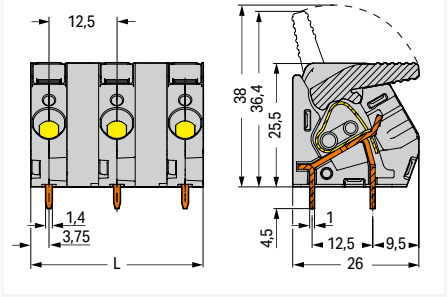

L = (pole no. x pin spacing) – 5 mm

PU = packaging unit; SPU = subpackaging unit; Dimensions in mm

Variants:

- Other pole numbers
- Other colors
- Mixed-color PCB connector strips
- Direct marking
- Other versions (or variants) can be requested from WAGO Sales or configured at https://configurator.wago.com/.

PCB terminal block ▸ 2706 Series

CAGE CLAMP® ▸ Actuation type: Lever ▸ Number of jumper slots: 1 ▸ 6 mm² ▸ Color: gray

1



- High-current PCB terminal strips with lever-actuated CAGE CLAMP® connection
- Tool-free termination – fingers open/close levers
- Several clamping units can be held open simultaneously, simplifying the connection of multi-core cables
- Two solder pins per contact point for high mechanical stability
- Versions with optional commoning for distributing potentials

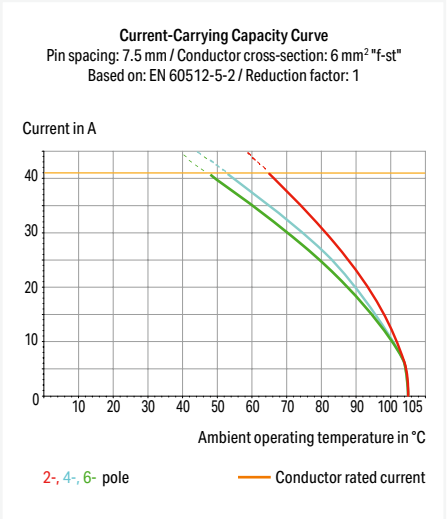

Electrical data						
Pin spacing	**7.5 mm / 0.295 inches**			**10 mm / 0.394 inches**		
Ratings per	**IEC/EN 60664-1**			**IEC/EN 60664-1**		
Overvoltage category	III	III	II	III	III	II
Pollution degree	3	2	2	3	2	2
Nominal voltage	500 V	630 V	1000 V	800 V	1000 V	1000 V
Rated impulse withstand voltage	6 kV	6 kV	6 kV	8 kV	8 kV	8 kV
Rated current	41 A	41 A	41 A	41 A	41 A	41 A
Approvals per	**UL 1059**			**UL 1059**		
Use group	B	C	D	B	C	D
Rated voltage	300 V	150 V	300 V	300 V	300 V	600 V
Rated current	30 A	30 A	30 A	30 A	30 A	5 A

Connection Data	
Connection technology	CAGE CLAMP®
Strip length	11 … 12 mm / 0.43 … 0.47 inches
Conductor connection direction to PCB	30 °
Solid conductor	0.5 … 6 mm² / 20 … 10 AWG
Fine-stranded conductor	0.5 … 6 mm² / 20 … 10 AWG
Fine-stranded conductor; with insulated ferrule	0.5 … 6 mm²
Fine-stranded conductor; with uninsulated ferrule	0.5 … 6 mm²

Material data	
Material group	I
Insulation material (main housing)	Polyamide (PA66)
Flammability class per UL94	V0
Clamping spring material	Chrome-nickel spring steel (CrNi)
Contact material	Electrolytic copper (E_{Cu})
Contact Plating	Tin

Mechanical data	
Solder pin arrangement	over the entire terminal strip (in-line)
Number of solder pins per potential	2
Solder pin length	4.5 mm
Solder pin dimensions	1 x 1.4 mm
Drilled hole diameter	1.8 $^{(+0.1)}$ mm

Environmental requirements	
Limit temperature range	-60 … +105 °C

Note:
Using adjacent jumpers, the rated voltage is reduced to 400 V with 7.5 mm pin spacing in Category III/3.

Ferrule	Page 1081
Jumper	Page 258
Test and measurement	Page 1088
See technical section for further information	
Approvals and corresponding ratings, visit www.wago.com	

PCB terminal block ▸ 2706 Series

CAGE CLAMP® ▸ Actuation type: Lever ▸ Number of jumper slots: 1 ▸ 6 mm² ▸ Color: gray

Pin spacing: 7.5 mm / 0.295 inches



2706-154

Pole number	Item No.	PU
2	2706-152	85
3	2706-153	55
4	2706-154	40
5	2706-155	30
6	2706-156	25
7	2706-157	20
8	2706-158	20
9	2706-159	15
10	2706-160	15
11	2706-161	15
12	2706-162	10

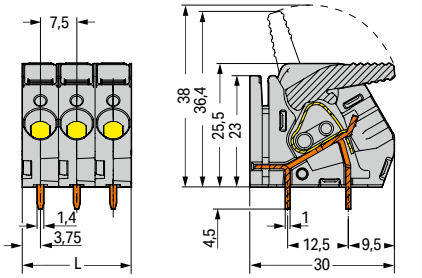

L = pole no. x pin spacing

Pin spacing: 10 mm / 0.394 inches



2706-254

Pole number	Item No.	PU
2	2706-252	70
3	2706-253	45
4	2706-254	30
5	2706-255	25
6	2706-256	20
7	2706-257	15
8	2706-258	15
9	2706-259	10
10	2706-260	10
11	2706-261	10
12	2706-262	10

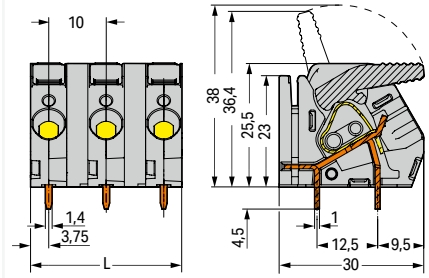

L = (pole no. x pin spacing) – 2.5 mm

PU = packaging unit; SPU = subpackaging unit; Dimensions in mm

Variants:

- Other pole numbers
- Other colors
- Mixed-color PCB connector strips
- Direct marking
- Other versions (or variants) can be requested from WAGO Sales or configured at https://configurator.wago.com/.

PCB terminal block ▸ 2716 Series

CAGE CLAMP® ▸ Actuation type: Lever ▸ 16 mm² ▸ Color: gray

1



- High-current PCB terminal strips with lever-actuated CAGE CLAMP® connection
- Tool-free termination – fingers open/close levers
- Several clamping units can be held open simultaneously, simplifying the connection of multi-core cables
- Four solder pins per contact point for high mechanical stability
- 600 V UL for 15 mm pin spacing
- Pin and dimensions compatible to high-current, screw-type terminal blocks

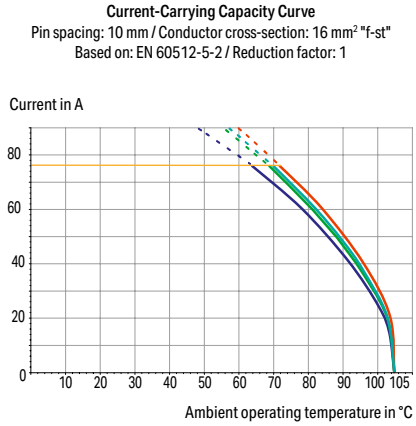

Electrical data						
Pin spacing	**10 mm / 0.394 inches**			**15 mm / 0.591 inches**		
Ratings per	**IEC/EN 60664-1**			**IEC/EN 60664-1**		
Overvoltage category	III	III	II	III	III	II
Pollution degree	3	2	2	3	2	2
Nominal voltage	320 V	320 V	630 V	800 V	1000 V	1000 V
Rated impulse withstand voltage	4 kV	4 kV	4 kV	8 kV	8 kV	8 kV
Rated current	76 A	76 A	76 A	76 A	76 A	76 A
Approvals per	**UL 1059**			**UL 1059**		
Use group	B	C	D	B	C	D
Rated voltage	300 V	150 V	300 V	600 V	600 V	-
Rated current	55 A	55 A	10 A	65 A	65 A	-

Connection Data	
Connection technology	CAGE CLAMP®
Strip length	12 … 13 mm / 0.47 … 0.51 inches
Conductor connection direction to PCB	30 °
Solid conductor	1.5 … 16 mm² / 16 … 6 AWG
Fine-stranded conductor	1.5 … 16 mm² / 16 … 6 AWG
Fine-stranded conductor; with insulated ferrule	1.5 … 10 mm²
Fine-stranded conductor; with uninsulated ferrule	1.5 … 10 mm²

Material data	
Material group	I
Insulation material (main housing)	Polyamide (PA66)
Flammability class per UL94	V0
Clamping spring material	Chrome-nickel spring steel (CrNi)
Contact material	Electrolytic copper (E_{Cu})
Contact Plating	Tin

Mechanical data	
Solder pin arrangement	over the entire terminal strip (in-line)
Number of solder pins per potential	4
Solder pin length	4.5 mm
Solder pin dimensions	0.95 x 1.2 mm
Drilled hole diameter	1.6 $^{(+0.1)}$ mm

Environmental requirements	
Limit temperature range	-60 … +105 °C

Ferrule	Page 1081
Test and measurement	Page 1088
See technical section for further information	
Approvals and corresponding ratings, visit www.wago.com	

PCB terminal block ▸ 2716 Series

CAGE CLAMP® ▸ Actuation type: Lever ▸ 16 mm² ▸ Color: gray

Pin spacing: 10 mm / 0.394 inches



2716-104

Pole number	Item No.	PU
2	2716-102	65
3	2716-103	40
4	2716-104	30
5	2716-105	25
6	2716-106	20
7	2716-107	15
8	2716-108	15

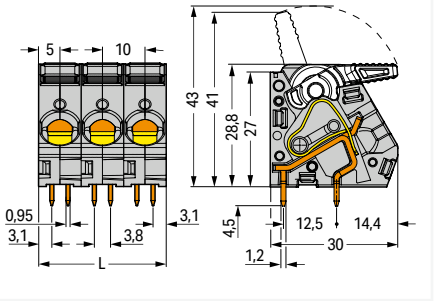

L = pole no. x pin spacing

Pin spacing: 15 mm / 0.591 inches



2716-204

Pole number	Item No.	PU
2	2716-202	50
3	2716-203	30
4	2716-204	20
5	2716-205	15
6	2716-206	15
7	2716-207	10
8	2716-208	10

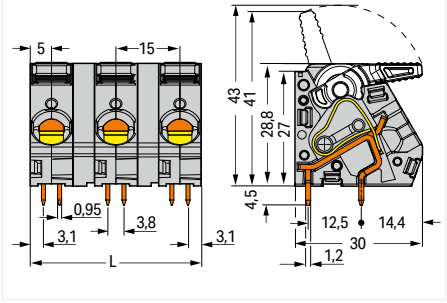

L = (pole no. x pin spacing) – 5 mm

PU = packaging unit; SPU = subpackaging unit; Dimensions in mm

Variants:

- Other pole numbers
- Other colors
- Mixed-color PCB connector strips
- Direct marking
- Other versions (or variants) can be requested from WAGO Sales or configured at https://configurator.wago.com/.

PCB terminal block ▸ 2716 Series

CAGE CLAMP® ▸ Actuation type: Lever ▸ Number of jumper slots: 1 ▸ 16 mm² ▸ Color: gray

1



- High-current PCB terminal strips with lever-actuated CAGE CLAMP® connection
- Tool-free termination – fingers open/close levers
- Several clamping units can be held open simultaneously, simplifying the connection of multi-core cables
- Four solder pins per contact point for high mechanical stability
- 600 V UL for 15 mm pin spacing
- Versions with optional commoning for distributing potentials

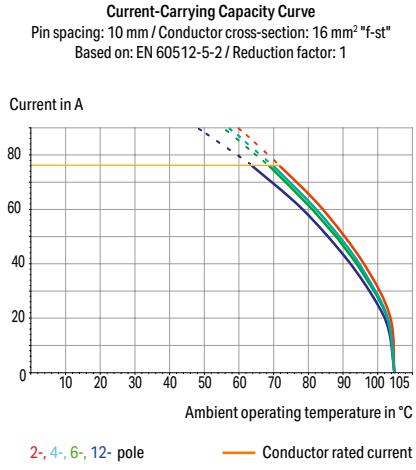

Electrical data						
Pin spacing	**10 mm / 0.394 inches**			**15 mm / 0.591 inches**		
Ratings per	**IEC/EN 60664-1**			**IEC/EN 60664-1**		
Overvoltage category	III	III	II	III	III	II
Pollution degree	3	2	2	3	2	2
Nominal voltage	320 V	320 V	630 V	800 V	1000 V	1000 V
Rated impulse withstand voltage	4 kV	4 kV	4 kV	8 kV	8 kV	8 kV
Rated current	76 A	76 A	76 A	76 A	76 A	76 A
Approvals per	**UL 1059**			**UL 1059**		
Use group	B	C	D	B	C	D
Rated voltage	300 V	150 V	300 V	600 V	600 V	-
Rated current	55 A	55 A	10 A	65 A	65 A	-

Connection Data	
Connection technology	CAGE CLAMP®
Strip length	12 … 13 mm / 0.47 … 0.51 inches
Conductor connection direction to PCB	30 °
Solid conductor	1.5 … 16 mm² / 16 … 6 AWG
Fine-stranded conductor	1.5 … 16 mm² / 16 … 6 AWG
Fine-stranded conductor; with insulated ferrule	1.5 … 10 mm²
Fine-stranded conductor; with uninsulated ferrule	1.5 … 10 mm²

Material data	
Material group	I
Insulation material (main housing)	Polyamide (PA66)
Flammability class per UL94	V0
Clamping spring material	Chrome-nickel spring steel (CrNi)
Contact material	Electrolytic copper (E_{Cu})
Contact Plating	Tin

Mechanical data	
Solder pin arrangement	over the entire terminal strip (in-line)
Number of solder pins per potential	4
Solder pin length	4.5 mm
Solder pin dimensions	0.95 x 1.2 mm
Drilled hole diameter	1.6 $^{(+0.1)}$ mm

Environmental requirements	
Limit temperature range	-60 … +105 °C

Ferrule	Page 1081
Jumper	Page 258
Test and measurement	Page 1088
See technical section for further information	
Approvals and corresponding ratings, visit www.wago.com	

PCB terminal block ▸ 2716 Series

CAGE CLAMP® ▸ Actuation type: Lever ▸ Number of jumper slots: 1 ▸ 16 mm² ▸ Color: gray

Pin spacing: 10 mm / 0.394 inches



2716-154

Pole number	Item No.	PU
2	2716-152	52
3	2716-153	32
4	2716-154	24
5	2716-155	20
6	2716-156	16
7	2716-157	12
8	2716-158	12

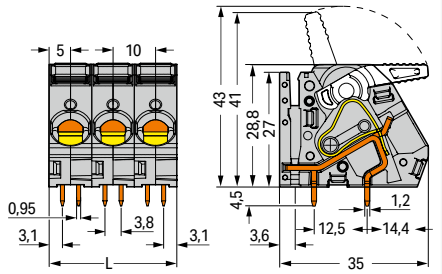

L = pole no. x pin spacing

Pin spacing: 15 mm / 0.591 inches



2716-254

Pole number	Item No.	PU
2	2716-252	40
3	2716-253	24
4	2716-254	16
5	2716-255	12
6	2716-256	12
7	2716-257	8
8	2716-258	8

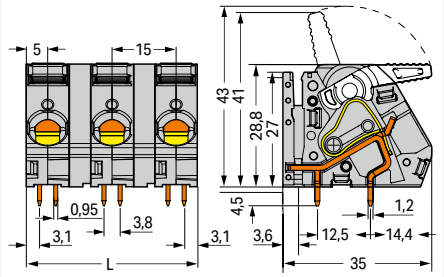

L = (pole no. x pin spacing) – 5 mm

PU = packaging unit; SPU = subpackaging unit; Dimensions in mm

Variants:

- Other pole numbers
- Other colors
- Mixed-color PCB connector strips
- Direct marking
- Other versions (or variants) can be requested from WAGO Sales or configured at https://configurator.wago.com/.

2-conductor PCB terminal block ▸ 816 Series

Push-in CAGE CLAMP® ▸ Actuation type: Operating tool ▸ 1.5 mm² ▸ Pin spacing: 5 mm / 0.197 inches ▸ Color: gray

1



- Two-conductor terminal strips with screwdriver actuation and Push-in CAGE CLAMP® connection
- Double entries for supply and power distribution
- Simple, reliable connection via clamping units featuring individual operating slots
- Simple, push-in termination of solid and ferruled conductors

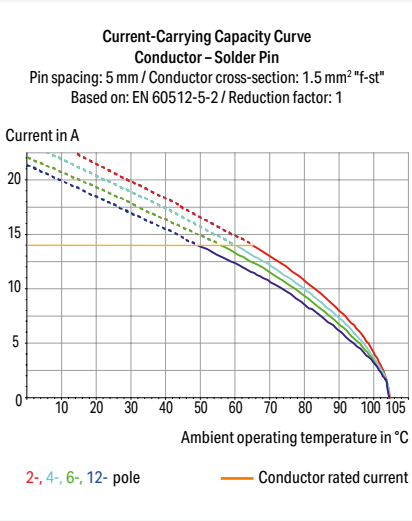

Electrical data			
Pin spacing	**5 mm / 0.197 inches**		
Ratings per	**IEC/EN 60664-1**		
Overvoltage category	III	III	II
Pollution degree	3	2	2
Nominal voltage	320 V	320 V	630 V
Rated impulse withstand voltage	4 kV	4 kV	4 kV
Rated current	14 A	14 A	14 A
Approvals per	**UL 1059**		
Use group	B	C	D
Rated voltage	300 V	-	300 V
Rated current	10 A	-	10 A
Approvals per	**CSA**		
Use group	B	C	D
Rated voltage	300 V	-	300 V
Rated current	8 A	-	-

Connection Data	
Connection technology	Push-in CAGE CLAMP®
Strip length	9 … 10 mm / 0.35 … 0.39 inches
Conductor connection direction to PCB	45 °
Solid conductor	0.2 … 1.5 mm² / 24 … 16 AWG
Fine-stranded conductor	0.2 … 1.5 mm² / 24 … 16 AWG
Fine-stranded conductor; with insulated ferrule	0.2 … 1 mm²
Fine-stranded conductor; with uninsulated ferrule	0.2 … 1.5 mm²

Material data	
Material group	I
Insulation material (main housing)	Polyamide (PA66)
Flammability class per UL94	V0
Clamping spring material	Chrome-nickel spring steel (CrNi)
Contact material	Copper alloy
Contact Plating	Tin

Mechanical data	
Solder pin arrangement	over the entire terminal strip (in-line)
Number of solder pins per potential	1
Solder pin length	3.5 mm
Solder pin dimensions	0.8 x 0.5 mm
Drilled hole diameter	1.1 (+0.1) mm

Environmental requirements	
Limit temperature range	-60 … +105 °C

Marking Page 1067
Tool Page 1072
See technical section for further information
Approvals and corresponding ratings, visit www.wago.com

2-conductor PCB terminal block ▸ 816 Series

Push-in CAGE CLAMP® ▸ Actuation type: Operating tool ▸ 1.5 mm² ▸ Pin spacing: 5 mm / 0.197 inches ▸ Color: gray





Open the clamping unit via screwdriver (3.5 mm blade) to insert/remove fine-stranded conductors.
Push in solid and ferruled, fine-stranded conductors until fully inserted.

816-105

Pole number	Item No.	PU (SPU)
2	816-102	322 (161)
3	816-103	224 (112)
4	816-104	168 (84)
5	816-105	140 (70)
6	816-106	112 (56)
7	816-107	98 (49)
8	816-108	84 (42)
9	816-109	70 (35)
10	816-110	70 (35)
11	816-111	56 (28)
12	816-112	56 (28)

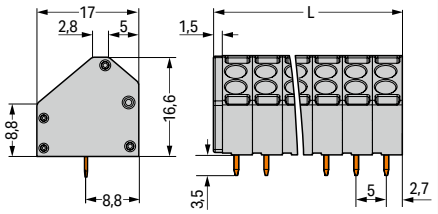

L = (pole no. x pin spacing) + 1.5 mm

PU = packaging unit; SPU = subpackaging unit; Dimensions in mm

Variants:
- Other pole numbers
- Other colors
- Mixed-color PCB connector strips
- Direct marking
- Other versions (or variants) can be requested from WAGO Sales or configured at https://configurator.wago.com/.

2-conductor PCB terminal block ▸ 746 Series

Push-in CAGE CLAMP® ▸ Actuation type: Operating tool ▸ 10 mm² ▸ Pin spacing: 7.5 mm / 0.295 inches ▸ Color: gray

1



- Two-conductor terminal strips with screwdriver actuation and Push-in CAGE CLAMP® connection
- Double entries for supply and power distribution
- Simple, reliable connection via clamping units featuring individual operating slots
- 600 V UL per UL 1059
- Simple, push-in termination of solid and ferruled conductors
- Marker slot for miniature WSB and WMB markers

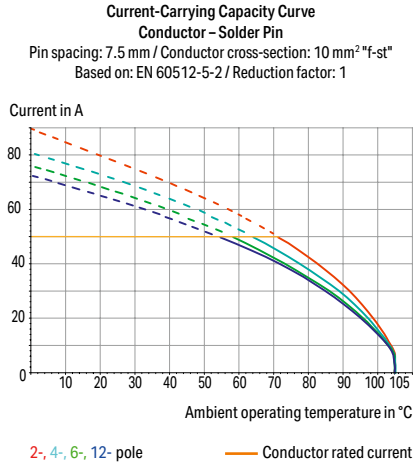

Electrical data			
Pin spacing	**7.5 mm / 0.295 inches**		
Ratings per	**IEC/EN 60664-1**		
Overvoltage category	III	III	II
Pollution degree	3	2	2
Nominal voltage	800 V	1000 V	1000 V
Rated impulse withstand voltage	8 kV	8 kV	8 kV
Rated current	50 A	50 A	50 A
Approvals per	**UL 1059**		
Use group	B	C	D
Rated voltage	600 V	600 V	-
Rated current	50 A	50 A	-
Approvals per	**CSA**		
Use group	B	C	D
Rated voltage	600 V	600 V	-
Rated current	44 A	44 A	-

Connection Data	
Connection technology	Push-in CAGE CLAMP®
Strip length	13 … 15 mm / 0.51 … 0.59 inches
Conductor connection direction to PCB	45 °
Solid conductor	0.5 … 10 mm² / 20 … 8 AWG
Fine-stranded conductor	0.5 … 10 mm² / 20 … 8 AWG
Fine-stranded conductor; with insulated ferrule	0.5 … 6 mm²
Fine-stranded conductor; with uninsulated ferrule	0.5 … 6 mm²

Material data	
Material group	I
Insulation material (main housing)	Polyamide (PA66)
Flammability class per UL94	V0
Clamping spring material	Chrome-nickel spring steel (CrNi)
Contact material	Electrolytic copper (E_{Cu})
Contact Plating	Tin

Mechanical data	
Solder pin arrangement	over the entire terminal strip (staggered)
Number of solder pins per potential	2
Solder pin length	4.4 mm
Solder pin dimensions	1.6 x 1.2 mm
Drilled hole diameter	2.2 $^{(+0.1)}$ mm

Environmental requirements	
Limit temperature range	-60 … +105 °C

Marking	Page 1064
Test and measurement	Page 1088
Tool	Page 1072
See technical section for further information	
Approvals and corresponding ratings, visit www.wago.com	

2-conductor PCB terminal block ▸ 746 Series

Push-in CAGE CLAMP® ▸ Actuation type: Operating tool ▸ 10 mm² ▸ Pin spacing: 7.5 mm / 0.295 inches ▸ Color: gray



746-2305

Pole number	Item No.	PU
2	746-2302	60
3	746-2303	40
4	746-2304	32
5	746-2305	24
6	746-2306	20
7	746-2307	16
8	746-2308	16
9	746-2309	12
10	746-2310	12
12	746-2312	8

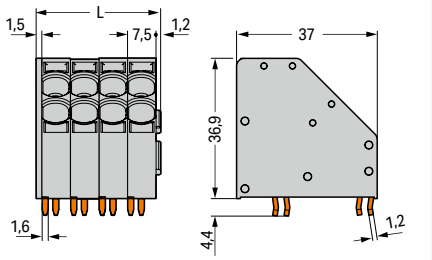

L = (pole no. x pin spacing) + 2.7 mm

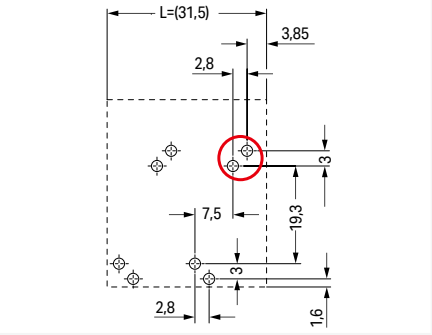

First solder pins, right rear (red circle)

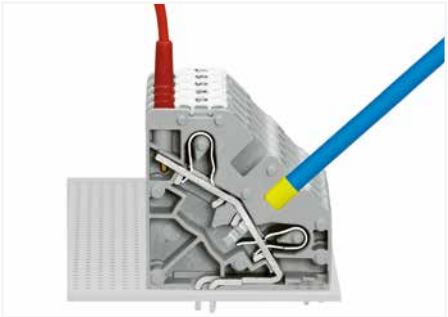

Inserting solid and ferruled conductors by simply pushing them into unit.
Testing with 2 mm Ø test plug.



Inserting fine-stranded conductors via screwdriver (5.5 mm blade).

PU = packaging unit; SPU = subpackaging unit; Dimensions in mm

Variants:
- Other pole numbers
- Other colors
- Mixed-color PCB connector strips
- Direct marking
- Other versions (or variants) can be requested from WAGO Sales or configured at https://configurator.wago.com/.

PCB terminal block ▸ 2624 Series

Push-in CAGE CLAMP® ▸ Actuation type: Operating tool ▸ 6 mm² ▸ Modular terminal block ▸ Pin spacing: 5 mm / 0.197 inches ▸ Color: gray

1



- PCB terminal blocks with Push-in CAGE CLAMP® connection
- Push-in termination of solid and ferruled conductors
- Ideal for panel feedthrough applications via operation parallel to conductor entry
- Testing can be performed both parallel and perpendicular to conductor entry

Current-Carrying Capacity Curve
PCB terminals blocks (2624-11xx)
Pin spacing: 5 mm / Conductor cross-section: 4 mm² "f-st"
Based on: EN 60512-5-2 / Reduction factor: 1

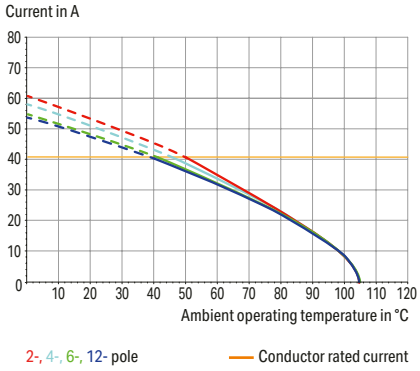

Electrical data			
Pin spacing	**5 mm / 0.197 inches**		
Ratings per	**IEC/EN 60664-1**		
Overvoltage category	III	III	II
Pollution degree	3	2	2
Nominal voltage	320 V	400 V	630 V
Rated impulse withstand voltage	4 kV	4 kV	4 kV
Rated current	41 A	41 A	41 A
Approvals per	**UL 1059**		
Use group	B	C	D
Rated voltage	300 V	-	300 V
Rated current	26 A	-	10 A
Approvals per	**CSA**		
Use group	B	C	D
Rated voltage	300 V	-	300 V
Rated current	26 A	-	5 A

Connection Data	
Connection technology	Push-in CAGE CLAMP®
Strip length	10 … 12 mm / 0.39 … 0.47 inches
Solid conductor	0.2 … 6 mm² / 24 … 10 AWG
Fine-stranded conductor	0.2 … 6 mm² / 24 … 10 AWG
Fine-stranded conductor; with insulated ferrule	0.25 … 2.5 mm²
Fine-stranded conductor; with uninsulated ferrule	0.25 … 2.5 mm²
Fine-stranded conductor; with twin ferrule	0.25 … 1.5 mm²

Material data	
Material group	I
Insulation material (main housing)	Polyamide (PA66)
Flammability class per UL94	V0
Clamping spring material	Chrome-nickel spring steel (CrNi)
Contact material	Electrolytic copper (E_{Cu})
Contact Plating	Tin

Mechanical data	
Solder pin arrangement	over the entire terminal strip (in-line)
Number of solder pins per potential	2
Solder pin length	4 mm
Solder pin dimensions	0.8 x 1 mm
Drilled hole diameter	1.3 $^{(+0.1)}$ mm

Environmental requirements	
Limit temperature range	-60 … +105 °C
Processing temperature	-35 … +60 °C
Continuous operating temperature	-60 … +105 °C

Note:
The inherent stability of a single-pole PCB terminal block is less than that of a multi-pole terminal strip. The customer must therefore ensure that these terminal blocks are protected against excessive mechanical stress (e.g., torsional or bending stress), both when connecting the conductor and during subsequent use, for example by providing additional support, shortly holding the connected conductor and appropriate actuation instructions.

Ferrule	Page 1081
Tool	Page 1072
See technical section for further information	
Approvals and corresponding ratings, visit www.wago.com	

PCB terminal block ▸ 2624 Series

Push-in CAGE CLAMP® ▸ Actuation type: Operating tool ▸ 6 mm² ▸ Modular terminal block ▸ Pin spacing: 5 mm / 0.197 inches ▸ Color: gray

Conductor connection direction to PCB: 0 °



2624-1101

Color	Pole number	Item No.	PU
gray	1	2624-1101	300

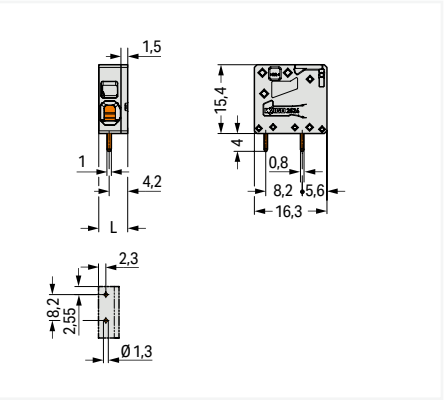

L = 6.5 mm

Conductor connection direction to PCB: 90 °



2624-3101

Color	Pole number	Item No.	PU
gray	1	2624-3101	300

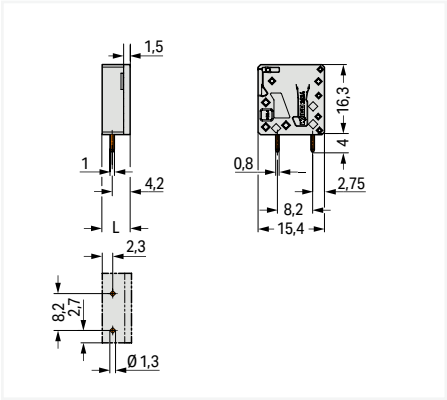

L = 6.5 mm

PU = packaging unit; SPU = subpackaging unit; Dimensions in mm

Variants:
- Other pole numbers
- Direct marking
- Other colors
- Other versions (or variants) can be requested from WAGO Sales or configured at https://configurator.wago.com/.

PCB terminal block ▸ 2624 Series

Push-in CAGE CLAMP® ▸ Actuation type: Operating tool ▸ 6 mm² ▸ Terminal strip ▸ Color: gray

1



- PCB terminal blocks with Push-in CAGE CLAMP® connection
- Push-in termination of solid and ferruled conductors
- Ideal for panel feedthrough applications via operation parallel to conductor entry
- Testing can be performed both parallel and perpendicular to conductor entry

Current-Carrying Capacity Curve
PCB terminals blocks (2624-11xx)
Pin spacing: 5 mm / Conductor cross-section: 4 mm² "f-st"
Based on: EN 60512-5-2 / Reduction factor: 1

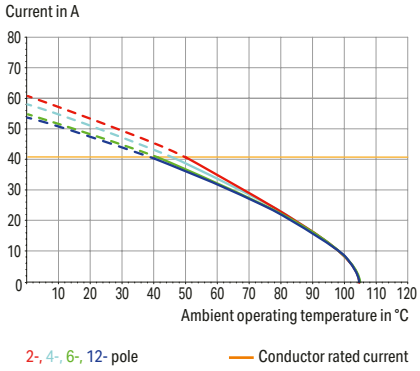

Electrical data									
Pin spacing	**5 mm / 0.197 inches**			**7.5 mm / 0.295 inches**			**11.5 mm / 0.453 inches**		
Ratings per	**IEC/EN 60664-1**			**IEC/EN 60664-1**			**IEC/EN 60664-1**		
Overvoltage category	III	III	II	III	III	II	III	III	II
Pollution degree	3	2	2	3	2	2	3	2	2
Nominal voltage	320 V	400 V	630 V	630 V	1000 V	1000 V	1000 V	1000 V	1000 V
Rated impulse withstand voltage	4 kV	4 kV	4 kV	6 kV	6 kV	6 kV	8 kV	8 kV	8 kV
Rated current	41 A	41 A	41 A	41 A	41 A	41 A	41 A	41 A	41 A
Approvals per	**UL 1059**			**UL 1059**			**UL 1059**		
Use group	B	C	D	B	C	D	B	C	D
Rated voltage	300 V	-	300 V	300 V	150 V	300 V	600 V	600 V	-
Rated current	26 A	-	10 A	26 A	26 A	10 A	26 A	26 A	-
Approvals per	**CSA**			**CSA**			**CSA**		
Use group	B	C	D	B	C	D	B	C	D
Rated voltage	300 V	-	300 V	300 V	-	300 V	600 V	600 V	-
Rated current	26 A	-	5 A	26 A	-	5 A	26 A	26 A	-

Connection Data	
Connection technology	Push-in CAGE CLAMP®
Strip length	10 … 12 mm / 0.39 … 0.47 inches
Solid conductor	0.2 … 6 mm² / 24 … 10 AWG
Fine-stranded conductor	0.2 … 6 mm² / 24 … 10 AWG
Fine-stranded conductor; with insulated ferrule	0.25 … 2.5 mm²
Fine-stranded conductor; with uninsulated ferrule	0.25 … 2.5 mm²
Fine-stranded conductor; with twin ferrule	0.25 … 1.5 mm²

Material data	
Material group	I
Insulation material (main housing)	Polyamide (PA66)
Flammability class per UL94	V0
Clamping spring material	Chrome-nickel spring steel (CrNi)
Contact material	Electrolytic copper (E_{Cu})
Contact Plating	Tin

Mechanical data	
Solder pin arrangement	over the entire terminal strip (in-line)
Number of solder pins per potential	2
Solder pin length	4 mm
Solder pin dimensions	0.8 x 1 mm
Drilled hole diameter	1.3 $^{(+0.1)}$ mm

Environmental requirements	
Limit temperature range	-60 … +105 °C
Processing temperature	-35 … +60 °C
Continuous operating temperature	-60 … +105 °C

Ferrule	Page 1081
Tool	Page 1072
See technical section for further information	
Approvals and corresponding ratings, visit www.wago.com	

PCB terminal block ▸ 2624 Series

Push-in CAGE CLAMP® ▸ Actuation type: Operating tool ▸ 6 mm² ▸ Terminal strip ▸ Color: gray

Conductor connection direction to PCB: 0 ° ▸ Pin spacing: 5 mm / 0.197 inches



2624-1102

Pole number	Item No.	PU
2	2624-1102	170
3	2624-1103	150
4	2624-1104	100
5	2624-1105	70
6	2624-1106	60
7	2624-1107	50
8	2624-1108	40
9	2624-1109	40
10	2624-1110	40
11	2624-1111	30
12	2624-1112	35

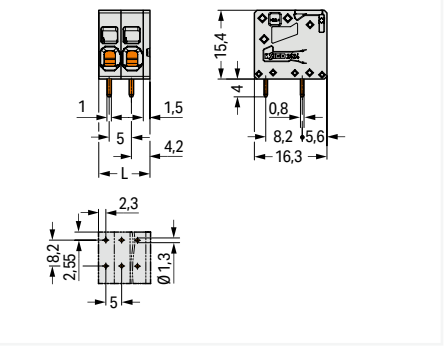

L = (pole no. – 1) x pin spacing + 6.5 mm

Conductor connection direction to PCB: 0 ° ▸ Pin spacing: 7.5 mm / 0.295 inches



2624-1302

Pole number	Item No.	PU (SPU)
2	2624-1302	140 (1)
3	2624-1303	120
4	2624-1304	70
5	2624-1305	50
6	2624-1306	40
7	2624-1307	50
8	2624-1308	30
9	2624-1309	30
10	2624-1310	20
11	2624-1311	20
12	2624-1312	20

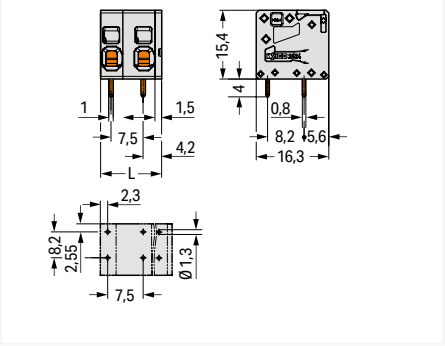

L = (pole no. – 1) x pin spacing + 6.5 mm

Conductor connection direction to PCB: 0 ° ▸ Pin spacing: 11.5 mm / 0.453 inches



2624-1502

Pole number	Item No.	PU
2	2624-1502	110
3	2624-1503	80
4	2624-1504	50
5	2624-1505	30
6	2624-1506	30
7	2624-1507	20
8	2624-1508	20
9	2624-1509	20
10	2624-1510	10
11	2624-1511	10
12	2624-1512	10

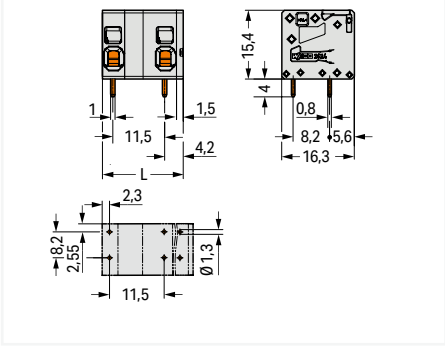

L = (pole no. – 1) x pin spacing + 6.5 mm

PU = packaging unit; SPU = subpackaging unit; Dimensions in mm

Variants:

- Other pole numbers
- Direct marking
- Other colors
- Other versions (or variants) can be requested from WAGO Sales or configured at https://configurator.wago.com/.

PCB terminal block ▸ 2624 Series

Push-in CAGE CLAMP® ▸ Actuation type: Operating tool ▸ 6 mm² ▸ Terminal strip ▸ Color: gray

1

Conductor connection direction to PCB: 90 ° ▸ Pin spacing: 5 mm / 0.197 inches



2624-3102

Pole number	Item No.	PU
2	2624-3102	200
3	2624-3103	150
4	2624-3104	100
5	2624-3105	100
6	2624-3106	60
7	2624-3107	50
8	2624-3108	50
9	2624-3109	40
10	2624-3110	40
11	2624-3111	30
12	2624-3112	30

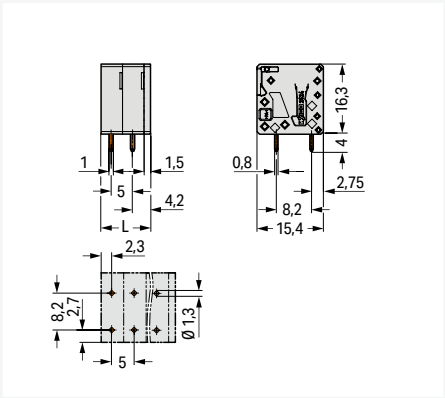

L = (pole no. – 1) x pin spacing + 6.5 mm

Conductor connection direction to PCB: 90 ° ▸ Pin spacing: 7.5 mm / 0.295 inches



2624-3303

Pole number	Item No.	PU
2	2624-3302	200
3	2624-3303	120
4	2624-3304	70
5	2624-3305	50
6	2624-3306	40
7	2624-3307	40
8	2624-3308	30
9	2624-3309	30
10	2624-3310	20
11	2624-3311	20
12	2624-3312	20

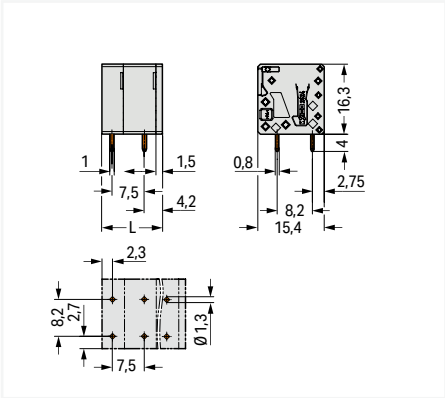

L = (pole no. – 1) x pin spacing + 6.5 mm

Conductor connection direction to PCB: 90 ° ▸ Pin spacing: 11.5 mm / 0.453 inches



2624-3502

Pole number	Item No.	PU
2	2624-3502	110
3	2624-3503	70
4	2624-3504	50
5	2624-3505	30
6	2624-3506	30
7	2624-3507	20
8	2624-3508	20
9	2624-3509	20
10	2624-3510	10
11	2624-3511	10
12	2624-3512	10

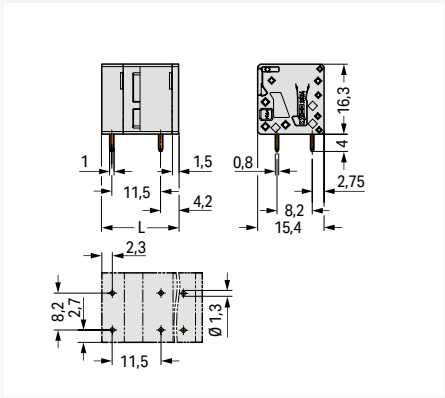

L = (pole no. – 1) x pin spacing + 6.5 mm

PU = packaging unit; SPU = subpackaging unit; Dimensions in mm

Variants:

- Other pole numbers
- Direct marking
- Other colors
- Other versions (or variants) can be requested from WAGO Sales or configured at https://configurator.wago.com/.

PCB terminal block ▸ 2626 Series

Push-in CAGE CLAMP® ▸ Actuation type: Operating tool ▸ 10 mm² ▸ Modular terminal block ▸ Pin spacing: 7.5 mm / 0.295 inches ▸ Color: gray

1



- PCB terminal strips with Push-in CAGE CLAMP® connection
- Push-in termination of solid and ferruled conductors
- Ideal for panel feedthrough applications via operation parallel to conductor entry
- Testing can be performed both parallel and perpendicular to conductor entry

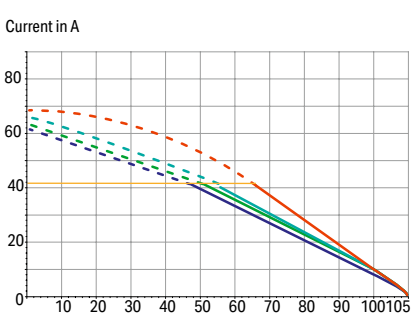

Electrical data			
Pin spacing	**7.5 mm / 0.295 inches**		
Ratings per	**IEC/EN 60664-1**		
Overvoltage category	III	III	II
Pollution degree	3	2	2
Nominal voltage	1000 V	1000 V	1000 V
Rated impulse withstand voltage	8 kV	8 kV	8 kV
Rated current	48 A	48 A	48 A
Approvals per	**UL 1059**		
Use group	B	C	D
Rated voltage	600 V	600 V	-
Rated current	38 A	38 A	-
Approvals per	**CSA**		
Use group	B	C	D
Rated voltage	600 V	1000 V	-
Rated current	38 A	38 A	-

Connection Data	
Connection technology	Push-in CAGE CLAMP®
Strip length	13 … 15 mm / 0.51 … 0.59 inches
Solid conductor	0.2 … 10 mm² / 24 … 8 AWG
Fine-stranded conductor	0.2 … 10 mm² / 24 … 8 AWG
Fine-stranded conductor; with insulated ferrule	0.25 … 6 mm²
Fine-stranded conductor; with uninsulated ferrule	0.25 … 6 mm²
Fine-stranded conductor; with twin ferrule	0.25 … 2.5 mm²

Material data	
Material group	I
Insulation material (main housing)	Polyamide (PA66)
Flammability class per UL94	V0
Clamping spring material	Chrome-nickel spring steel (CrNi)
Contact material	Electrolytic copper (E_{Cu})
Contact Plating	Tin

Mechanical data	
Solder pin arrangement	over the entire terminal strip (in-line)
Number of solder pins per potential	2
Solder pin length	4 mm
Solder pin dimensions	1.5 x 1 mm
Drilled hole diameter	2 (+0.1) mm

Environmental requirements	
Limit temperature range	-60 … +105 °C
Processing temperature	-35 … +60 °C
Continuous operating temperature	-60 … +105 °C

Note:
The inherent stability of a single-pole PCB terminal block is less than that of a multi-pole terminal strip. The customer must therefore ensure that these terminal blocks are protected against excessive mechanical stress (e.g., torsional or bending stress), both when connecting the conductor and during subsequent use, for example by providing additional support, shortly holding the connected conductor and appropriate actuation instructions.

Tool Page 1072

See technical section for further information

Approvals and corresponding ratings, visit www.wago.com

PCB terminal block ▸ 2626 Series

Push-in CAGE CLAMP® ▸ Actuation type: Operating tool ▸ 10 mm² ▸ Modular terminal block ▸ Pin spacing: 7.5 mm / 0.295 inches ▸ Color: gray

Conductor connection direction to PCB: 0 °



2626-1101

Color	Pole number	Item No.	PU
gray	1	2626-1101	200

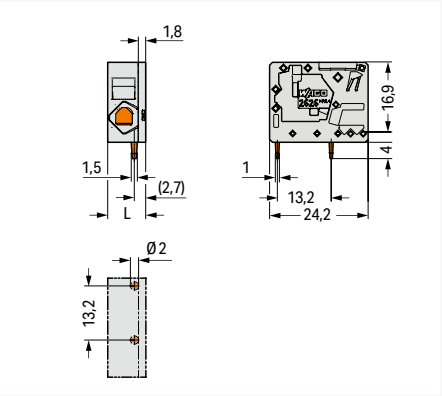

L = 9.3 mm

Conductor connection direction to PCB: 90 °



2626-3101

Color	Pole number	Item No.	PU
gray	1	2626-3101	200

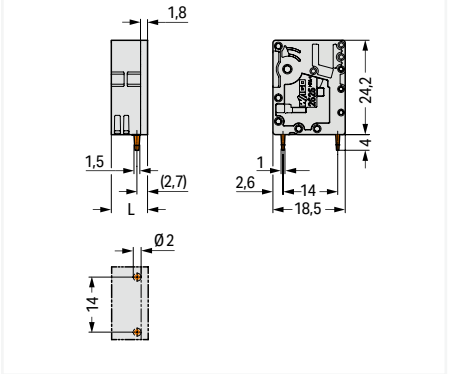

L = 9.3 mm

PU = packaging unit; SPU = subpackaging unit; Dimensions in mm

Variants:
- Other pole numbers
- Direct marking
- Other colors
- Other versions (or variants) can be requested from WAGO Sales or configured at https://configurator.wago.com/.

PCB terminal block ▸ 2626 Series

Push-in CAGE CLAMP® ▸ Actuation type: Operating tool ▸ 10 mm² ▸ Terminal strip ▸ Color: gray

1



- PCB terminal strips with Push-in CAGE CLAMP® connection
- Push-in termination of solid and ferruled conductors
- Ideal for panel feedthrough applications via operation parallel to conductor entry
- Testing can be performed both parallel and perpendicular to conductor entry

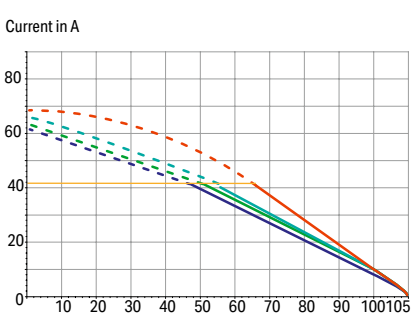

Electrical data						
Pin spacing	**7.5 mm / 0.295 inches**			**12.5 mm / 0.492 inches**		
Ratings per	**IEC/EN 60664-1**			**IEC/EN 60664-1**		
Overvoltage category	III	III	II	III	III	II
Pollution degree	3	2	2	3	2	2
Nominal voltage	1000 V	1000 V	1000 V	1000 V	1000 V	1000 V
Rated impulse withstand voltage	8 kV	8 kV	8 kV	8 kV	8 kV	8 kV
Rated current	48 A	48 A	48 A	48 A	48 A	48 A
Approvals per	**UL 1059**					
Use group	B	C	D			
Rated voltage	600 V	600 V	-			
Rated current	38 A	38 A	-			
Approvals per	**CSA**			**CSA**		
Use group	B	C	D	B	C	D
Rated voltage	600 V	600 V	-	600 V	600 V	-
Rated current	31 A	31 A	-	38 A	38 A	-

Connection Data	
Connection technology	Push-in CAGE CLAMP®
Strip length	13 … 15 mm / 0.51 … 0.59 inches
Solid conductor	0.2 … 10 mm² / 24 … 8 AWG
Fine-stranded conductor	0.2 … 10 mm² / 24 … 8 AWG
Fine-stranded conductor; with insulated ferrule	0.25 … 6 mm²
Fine-stranded conductor; with uninsulated ferrule	0.25 … 6 mm²
Fine-stranded conductor; with twin ferrule	0.25 … 2.5 mm²

Material data	
Material group	I
Insulation material (main housing)	Polyamide (PA66)
Flammability class per UL94	V0
Clamping spring material	Chrome-nickel spring steel (CrNi)
Contact material	Electrolytic copper (E_{Cu})
Contact Plating	Tin

Mechanical data	
Solder pin length	4 mm
Solder pin dimensions	1.5 x 1 mm
Drilled hole diameter	2 $^{(+0.1)}$ mm

Environmental requirements	
Limit temperature range	-60 … +105 °C
Processing temperature	-35 … +60 °C
Continuous operating temperature	-60 … +105 °C

Tool Page 1072

See technical section for further information

Approvals and corresponding ratings, visit www.wago.com

PCB terminal block ▸ 2626 Series

Push-in CAGE CLAMP® ▸ Actuation type: Operating tool ▸ 10 mm² ▸ Terminal strip ▸ Color: gray

Solder pin arrangement: over the entire terminal strip (staggered) ▸ Pin spacing: 7.5 mm / 0.295 inches

Conductor connection direction to PCB: 0 °



2626-1103/020-000

Pole number	Item No.	PU
2	2626-1102/020-000	140
3	2626-1103/020-000	90
4	2626-1104/020-000	48
5	2626-1105/020-000	60
6	2626-1106/020-000	32
7	2626-1107/020-000	24
8	2626-1108/020-000	24
9	2626-1109/020-000	16
10	2626-1110/020-000	16
11	2626-1111/020-000	16
12	2626-1112/020-000	16

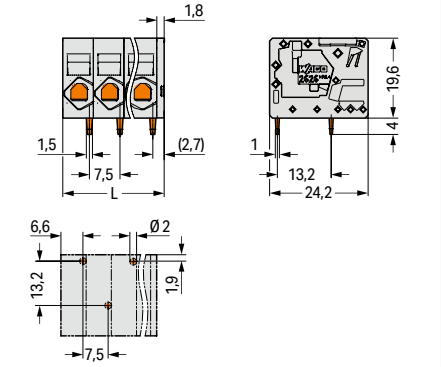

L = (pole no. – 1) x pin spacing + 9.3 mm

Conductor connection direction to PCB: 90 °



2626-3102/020-000

Pole number	Item No.	PU
2	2626-3102/020-000	99
3	2626-3103/020-000	72
4	2626-3104/020-000	70
5	2626-3105/020-000	45
6	2626-3106/020-000	36
7	2626-3107/020-000	27
8	2626-3108/020-000	40
9	2626-3109/020-000	18
10	2626-3110/020-000	18
11	2626-3111/020-000	18
12	2626-3112/020-000	18

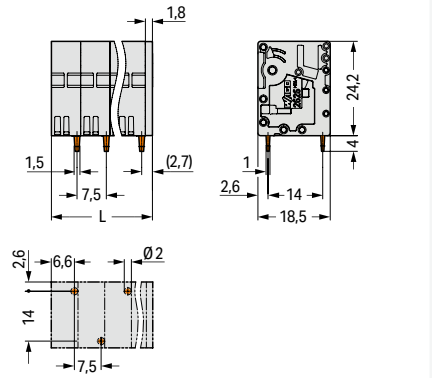

L = (pole no. – 1) x pin spacing + 9.3 mm

PU = packaging unit; SPU = subpackaging unit; Dimensions in mm

Variants:
- Other pole numbers
- Direct marking
- Other colors
- Other versions (or variants) can be requested from WAGO Sales or configured at https://configurator.wago.com/.

PCB terminal block ▸ 2626 Series

Push-in CAGE CLAMP® ▸ Actuation type: Operating tool ▸ 10 mm² ▸ Terminal strip ▸ Color: gray

1

Solder pin arrangement: over the entire terminal strip (in-line) ▸ Pin spacing: 12.5 mm / 0.492 inches

Conductor connection direction to PCB: 0 °



2626-1352

Pole number	Item No.	PU
2	2626-1352	72
3	2626-1353	50
4	2626-1354	32
5	2626-1355	48
6	2626-1356	16
7	2626-1357	16
8	2626-1358	16
9	2626-1359	8
10	2626-1360	8
11	2626-1361	8
12	2626-1362	8

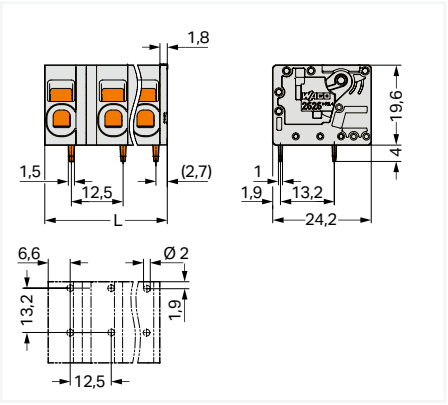

L = (pole no. – 1) x pin spacing + 9.3 mm

Conductor connection direction to PCB: 90 °



2626-3352

Pole number	Item No.	PU
2	2626-3352	81
3	2626-3353	45
4	2626-3354	36
5	2626-3355	27
6	2626-3356	18
7	2626-3357	18
8	2626-3358	18
9	2626-3359	9
10	2626-3360	9
11	2626-3361	9
12	2626-3362	9

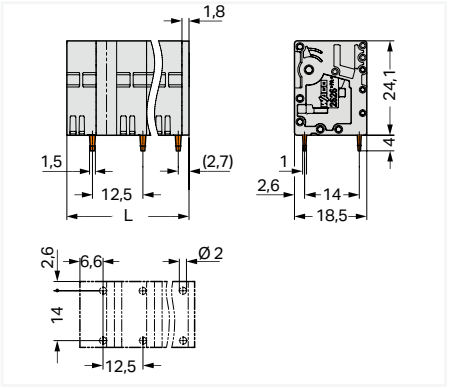

L = (pole no. – 1) x pin spacing + 9.3 mm

PU = packaging unit; SPU = subpackaging unit

Variants:

- Other pole numbers
- Direct marking
- Other colors
- Other versions (or variants) can be requested from WAGO Sales or configured at https://configurator.wago.com/.

PCB terminal block ▸ 2636 Series

Push-in CAGE CLAMP® ▸ Actuation type: Operating tool ▸ 16 mm² ▸ Modular terminal block ▸ Pin spacing: 10 mm / 0.394 inches ▸ Color: gray

1



- PCB terminal strips with Push-in CAGE CLAMP® connection
- Push-in termination of solid and ferruled conductors
- Ideal for panel feedthrough applications via operation parallel to conductor entry
- Testing can be performed both parallel and perpendicular to conductor entry

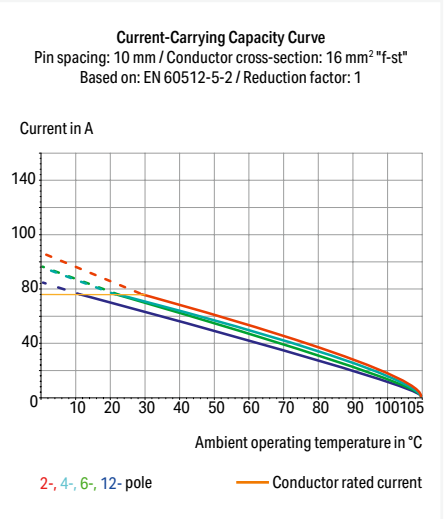

Electrical data			
Pin spacing	**10 mm / 0.394 inches**		
Ratings per	**IEC/EN 60664-1**		
Overvoltage category	III	III	II
Pollution degree	3	2	2
Nominal voltage	1000 V	1000 V	1000 V
Rated impulse withstand voltage	8 kV	8 kV	8 kV
Rated current	76 A	76 A	76 A
Approvals per	**UL 1059**		
Use group	B	C	D
Rated voltage	600 V	600 V	-
Rated current	85 A	85 A	-
Approvals per	**CSA**		
Use group	B	C	D
Rated voltage	600 V	1000 V	-
Rated current	66 A	66 A	-

Connection Data	
Connection technology	Push-in CAGE CLAMP®
Strip length	18 … 20 mm / 0.71 … 0.79 inches
Solid conductor	0.75 … 16 mm² / 18 … 4 AWG
Fine-stranded conductor	0.75 … 25 mm² / 18 … 4 AWG
Fine-stranded conductor; with insulated ferrule	0.75 … 16 mm²
Fine-stranded conductor; with uninsulated ferrule	0.75 … 16 mm²
Fine-stranded conductor; with twin ferrule	0.75 … 6 mm²

Material data	
Material group	I
Insulation material (main housing)	Polyamide (PA66)
Flammability class per UL94	V0
Clamping spring material	Chrome-nickel spring steel (CrNi)
Contact material	Electrolytic copper (E_{Cu})
Contact Plating	Tin

Mechanical data	
Solder pin arrangement	over the entire terminal strip (in-line)
Number of solder pins per potential	6
Solder pin length	4 mm
Solder pin dimensions	1.2 x 1 mm
Drilled hole diameter	1.7 $^{(+0.1)}$ mm

Environmental requirements	
Limit temperature range	-60 … +105 °C
Processing temperature	-35 … +60 °C

Note:
The inherent stability of a single-pole PCB terminal block is less than that of a multi-pole terminal strip. The customer must therefore ensure that these terminal blocks are protected against excessive mechanical stress (e.g., torsional or bending stress), both when connecting the conductor and during subsequent use, for example by providing additional support, shortly holding the connected conductor and appropriate actuation instructions.

Ferrule	Page 1081
Tool	Page 1072
See technical section for further information	
Approvals and corresponding ratings, visit www.wago.com	

PCB terminal block ▸ 2636 Series

Push-in CAGE CLAMP® ▸ Actuation type: Operating tool ▸ 16 mm² ▸ Modular terminal block ▸ Pin spacing: 10 mm / 0.394 inches ▸ Color: gray

Conductor connection direction to PCB: 0 °



2636-1101

Color	Pole number	Item No.	PU
gray	1	2636-1101	100

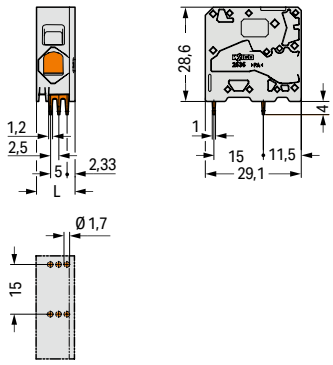

L = 11.6 mm

Conductor connection direction to PCB: 90 °



2636-3101

Color	Pole number	Item No.	PU
gray	1	2636-3101	100

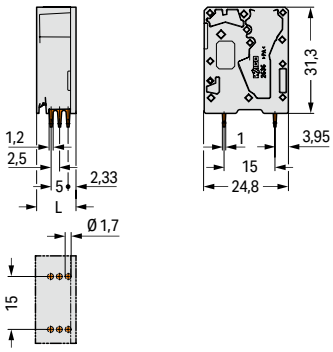

L = 11.6 mm

PU = packaging unit; SPU = subpackaging unit; Dimensions in mm

Variants:
- Other pole numbers
- Direct marking
- Other colors
- Other versions (or variants) can be requested from WAGO Sales or configured at https://configurator.wago.com/.

PCB terminal block ▸ 2636 Series

Push-in CAGE CLAMP® ▸ Actuation type: Operating tool ▸ 16 mm² ▸ Terminal strip ▸ Color: gray

1



- PCB terminal strips with Push-in CAGE CLAMP® connection
- Push-in termination of solid and ferruled conductors
- Ideal for panel feedthrough applications via operation parallel to conductor entry
- Testing can be performed both parallel and perpendicular to conductor entry

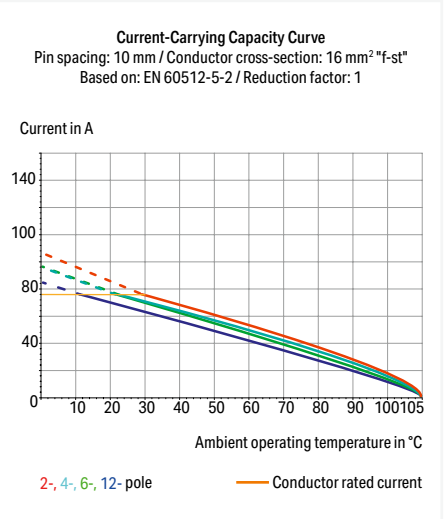

Electrical data						
Pin spacing	**10 mm / 0.394 inches**			**15 mm / 0.591 inches**		
Ratings per	**IEC/EN 60664-1**			**IEC/EN 60664-1**		
Overvoltage category	III	III	II	III	III	II
Pollution degree	3	2	2	3	2	2
Nominal voltage	1000 V	1000 V	1000 V	1000 V	1000 V	1000 V
Rated impulse withstand voltage	8 kV	8 kV	8 kV	8 kV	8 kV	8 kV
Rated current	76 A	76 A	76 A	76 A	76 A	76 A
Approvals per				**UL 1059**		
Use group				B	C	D
Rated voltage				300 V	300 V	600 V
Rated current				85 A	85 A	5 A
Approvals per	**CSA**			**CSA**		
Use group	B	C	D	B	C	D
Rated voltage	600 V	600 V	-	300 V	300 V	600 V
Rated current	66 A	66 A	-	66 A	66 A	66 A

Connection Data	
Connection technology	Push-in CAGE CLAMP®
Strip length	18 … 20 mm / 0.71 … 0.79 inches
Solid conductor	0.75 … 16 mm² / 18 … 4 AWG
Fine-stranded conductor	0.75 … 25 mm² / 18 … 4 AWG
Fine-stranded conductor; with insulated ferrule	0.75 … 16 mm²
Fine-stranded conductor; with uninsulated ferrule	0.75 … 16 mm²
Fine-stranded conductor; with twin ferrule	0.75 … 6 mm²

Material data	
Material group	I
Insulation material (main housing)	Polyamide (PA66)
Flammability class per UL94	V0
Clamping spring material	Chrome-nickel spring steel (CrNi)
Contact material	Electrolytic copper (E_{Cu})
Contact Plating	Tin

Mechanical data	
Solder pin length	4 mm
Solder pin dimensions	1.2 x 1 mm
Drilled hole diameter	1.7 $^{(+0.1)}$ mm

Environmental requirements	
Limit temperature range	-60 … +105 °C
Processing temperature	-35 … +60 °C
Continuous operating temperature	-60 … +105 °C

Ferrule Page 1081
Tool Page 1072

See technical section for further information

Approvals and corresponding ratings, visit www.wago.com

PCB terminal block ▸ 2636 Series

Push-in CAGE CLAMP® ▸ Actuation type: Operating tool ▸ 16 mm² ▸ Terminal strip ▸ Color: gray

Solder pin arrangement: over the entire terminal strip (staggered) ▸ Pin spacing: 10 mm / 0.394 inches

Conductor connection direction to PCB: 0 °



2636-1103/020-000

Pole number	Item No.	PU
2	2636-1102/020-000	50
3	2636-1103/020-000	50
4	2636-1104/020-000	25
5	2636-1105/020-000	24
6	2636-1106/020-000	18
7	2636-1107/020-000	12
8	2636-1108/020-000	12
9	2636-1109/020-000	12
10	2636-1110/020-000	12
11	2636-1111/020-000	6
12	2636-1112/020-000	6

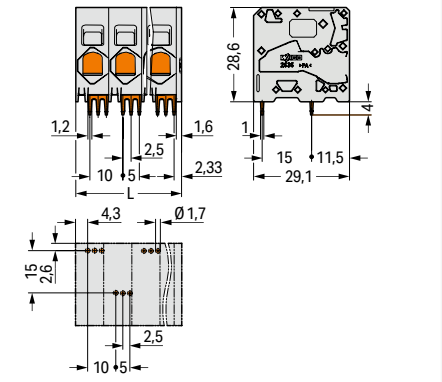

L = (pole no. – 1) x pin spacing + 11.6 mm

Conductor connection direction to PCB: 90 °



2636-3102/020-000

Pole number	Item No.	PU
2	2636-3102/020-000	50
3	2636-3103/020-000	42
4	2636-3104/020-000	25
5	2636-3105/020-000	28
6	2636-3106/020-000	21
7	2636-3107/020-000	14
8	2636-3108/020-000	14
9	2636-3109/020-000	14
10	2636-3110/020-000	14
11	2636-3111/020-000	7
12	2636-3112/020-000	7

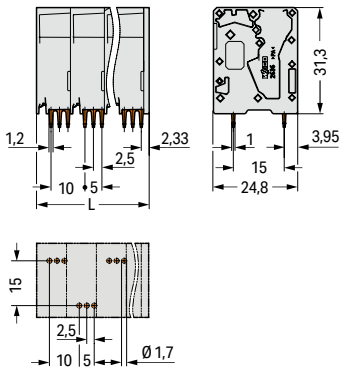

L = (pole no. – 1) x pin spacing + 11.6 mm

PU = packaging unit; SPU = subpackaging unit; Dimensions in mm

Variants:

- Other pole numbers
- Direct marking
- Other colors
- Other versions (or variants) can be requested from WAGO Sales or configured at https://configurator.wago.com/.

PCB terminal block ▸ 2636 Series

Push-in CAGE CLAMP® ▸ Actuation type: Operating tool ▸ 16 mm² ▸ Terminal strip ▸ Color: gray

1

Solder pin arrangement: over the entire terminal strip (in-line) ▸ Pin spacing: 15 mm / 0.591 inches

Conductor connection direction to PCB: 0 °



2636-1353

Pole number	Item No.	PU
2	2636-1352	42
3	2636-1353	24
4	2636-1354	18
5	2636-1355	12
6	2636-1356	12
7	2636-1357	12
8	2636-1358	6

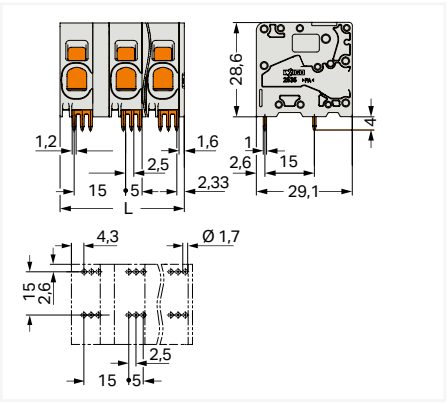

L = (pole no. – 1) x pin spacing + 11.6 mm

Conductor connection direction to PCB: 90 °



2636-3353

Pole number	Item No.	PU
2	2636-3352	49
3	2636-3353	28
4	2636-3354	21
5	2636-3355	14
6	2636-3356	14
7	2636-3357	14
8	2636-3358	7

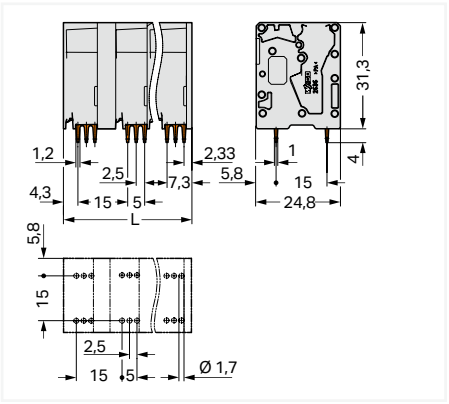

L = (pole no. – 1) x pin spacing + 11.6 mm

PU = packaging unit; SPU = subpackaging unit

Variants:

- Other pole numbers
- Direct marking
- Other colors
- Other versions (or variants) can be requested from WAGO Sales or configured at https://configurator.wago.com/.

250 Series
Description and Installation

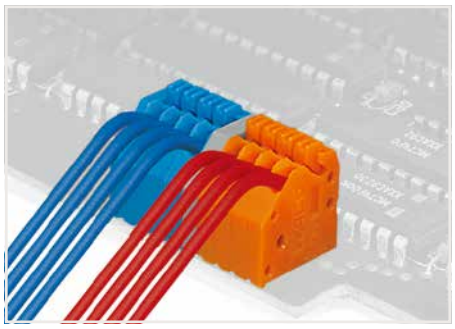

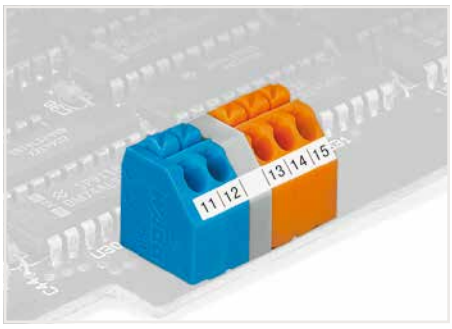

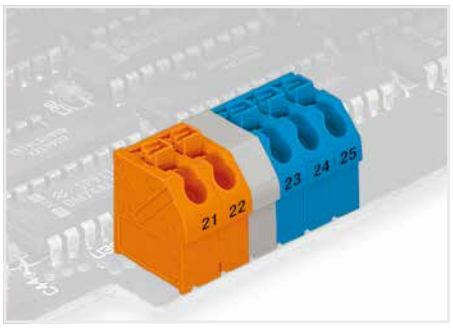

Labeling via self-adhesive strips or direct marking. Mixed-color terminal strips (with or without spacer) are available upon request.



Space-saving wiring, 250 Series – 5 mm pin spacing.



Inserting solid conductors via push-in termination.
Inserting fine-stranded conductors via push-buttons,
250 Series – 3.5 mm pin spacing.

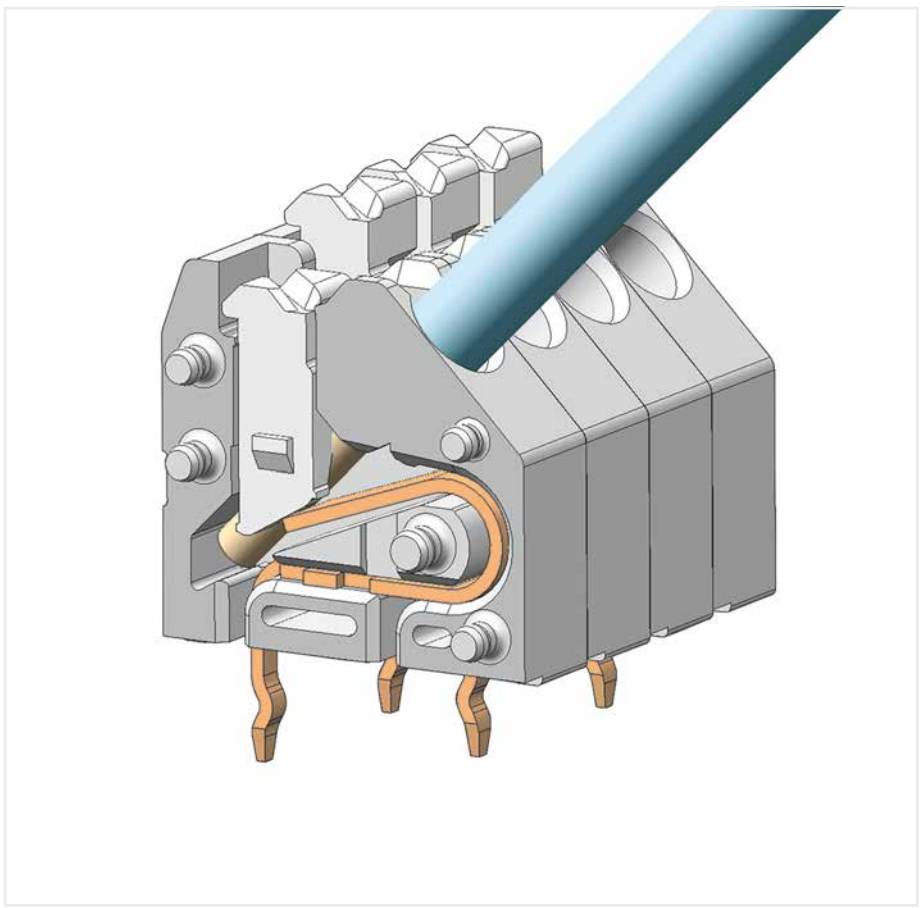

250 Series

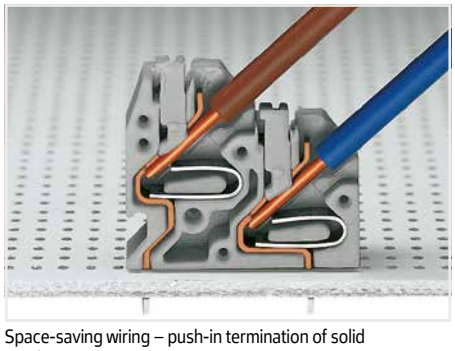

Space-saving wiring – push-in termination of solid conductors.

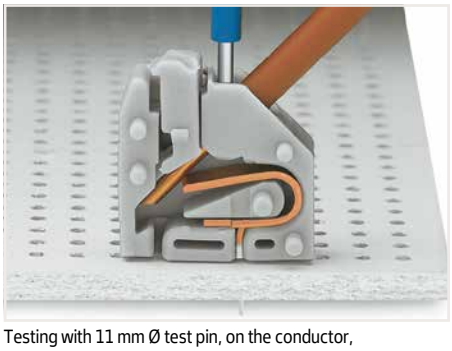

Testing with 11 mm Ø test pin, on the conductor,
250 Series – 2.5 … 3.5 mm pin spacing.

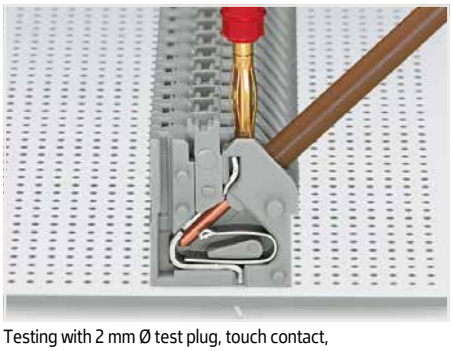

Testing with 2 mm Ø test plug, touch contact,
250 Series – 5 mm pin spacing.

PCB terminal block ▸ 250 Series

Push-in CAGE CLAMP® ▸ Actuation type: Push-button ▸ 0.5 mm² ▸ Solder pin arrangement: over the entire terminal strip (in-line) ▸ Pin spacing: 2.5 mm / 0.098 inches ▸ Color: gray

1



- Compact PCB terminal strips with push-buttons
- Push-in termination of solid conductors
- Termination/removal of fine-stranded conductors via push-buttons
- 45° conductor entry angle provides easy, space-saving wiring
- Custom color combinations
- Terminal strips also available with spacers upon request

Current-Carrying Capacity Curve
Pin spacing: 2.5 mm / Conductor cross-section: 0.5 mm² "f-st"
Based on: EN 60512-5-2 / Reduction factor: 1

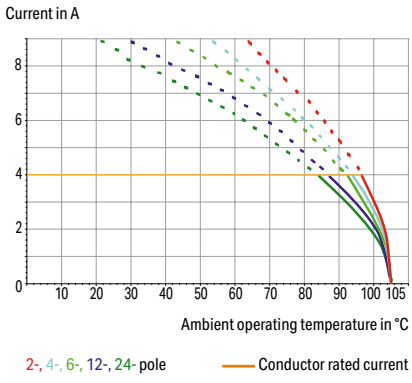

Electrical data			
Pin spacing	**2.5 mm / 0.098 inches**		
Ratings per	**IEC/EN 60664-1**		
Overvoltage category	III	III	II
Pollution degree	3	2	2
Nominal voltage	100 V	160 V	320 V
Rated impulse withstand voltage	2.5 kV	2.5 kV	2.5 kV
Rated current	4 A	4 A	4 A
Approvals per	**UL 1059**		
Use group	B	C	D
Rated voltage	300 V	-	300 V
Rated current	5 A	-	5 A
Approvals per	**CSA**		
Use group	B	C	D
Rated voltage	300 V	-	300 V
Rated current	2 A	-	2 A

Connection Data	
Connection technology	Push-in CAGE CLAMP®
Strip length	8.5 … 9.5 mm / 0.33 … 0.37 inches
Conductor connection direction to PCB	45 °
Solid conductor	0.14 … 0.5 mm² / 24 … 20 AWG
Fine-stranded conductor	0.2 … 0.5 mm² / 24 … 20 AWG
Conductor diameter	0.4 … 0.8 mm / 24 … 20 AWG

Material data	
Material group	I
Insulation material (main housing)	Polyamide (PA66)
Flammability class per UL94	V0
Clamping spring material	Copper alloy
Contact Plating	Tin

Mechanical data	
Solder pin arrangement	over the entire terminal strip (in-line)
Number of solder pins per potential	1
Solder pin length	3.6 mm
Solder pin dimensions	0.4 x 0.75 mm
Drilled hole diameter	1.1 (+0.1) mm

Environmental requirements	
Limit temperature range	-60 … +105 °C

Marking	Page 1066
Test and measurement	Page 1088
Tool	Page 1072
See technical section for further information	
Approvals and corresponding ratings, visit www.wago.com	

PCB terminal block ▸ 250 Series

Push-in CAGE CLAMP® ▸ Actuation type: Push-button ▸ 0.5 mm² ▸ Solder pin arrangement: over the entire terminal strip (in-line) ▸ Pin spacing: 2.5 mm / 0.098 inches ▸ Color: gray



250-312

Pole number	Item No.	PU (SPU)
2	**250-302**	720 (180)
3	**250-303**	520 (130)
4	**250-304**	400 (100)
5	**250-305**	340 (85)
6	**250-306**	280 (70)
7	**250-307**	240 (60)
8	**250-308**	220 (55)
9	**250-309**	200 (50)
10	**250-310**	180 (45)
11	**250-311**	160 (40)
12	**250-312**	140 (35)
13	**250-313**	140 (35)
14	**250-314**	120 (30)
15	**250-315**	120 (30)
16	**250-316**	100 (25)
17	**250-317**	100 (25)
18	**250-318**	80 (20)
19	**250-319**	80 (20)
20	**250-320**	80 (20)
21	**250-321**	80 (20)
22	**250-322**	80 (20)
23	**250-323**	80 (20)
24	**250-324**	60 (15)

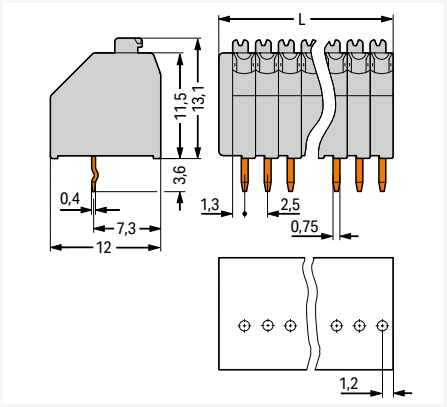

L = (pole no. x pin spacing) + 1.5 mm

PU = packaging unit; SPU = subpackaging unit; Dimensions in mm

Variants:

- Other pole numbers
- Other colors
- Mixed-color PCB connector strips
- Terminal strips with spacers
- Direct marking
- Other versions (or variants) can be requested from WAGO Sales or configured at https://configurator.wago.com/.

PCB terminal block ▸ 250 Series

Push-in CAGE CLAMP® ▸ Actuation type: Push-button ▸ 0.5 mm² ▸ Solder pin arrangement: over the entire terminal strip (staggered) ▸ Color: gray

1



- Compact PCB terminal strips with push-buttons
- Push-in termination of solid conductors
- Termination/removal of fine-stranded conductors via push-buttons
- 45° conductor entry angle provides easy, space-saving wiring
- Custom color combinations
- Terminal strips also available with spacers upon request

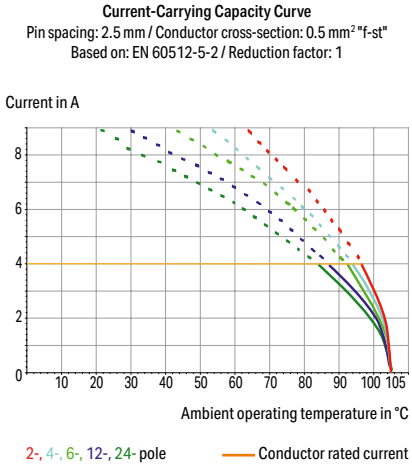

Electrical data			
Pin spacing	**2.5 mm / 0.098 inches; 2.54 mm / 0.1 inches**		
Ratings per	**IEC/EN 60664-1**		
Overvoltage category	III	III	II
Pollution degree	3	2	2
Nominal voltage	160 V	160 V	320 V
Rated impulse withstand voltage	2.5 kV	2.5 kV	2.5 kV
Rated current	4 A	4 A	4 A
Approvals per	**UL 1059**		
Use group	B	C	D
Rated voltage	300 V	-	300 V
Rated current	5 A	-	5 A
Approvals per	**CSA**		
Use group	B	C	D
Rated voltage	300 V	-	300 V
Rated current	5 A	-	5 A

Connection Data	
Connection technology	Push-in CAGE CLAMP®
Strip length	8.5 … 9.5 mm / 0.33 … 0.37 inches
Conductor connection direction to PCB	45 °
Solid conductor	0.14 … 0.5 mm² / 24 … 20 AWG
Fine-stranded conductor	0.2 … 0.5 mm² / 24 … 20 AWG
Conductor diameter	0.4 … 0.8 mm / 24 … 20 AWG

Material data	
Material group	I
Insulation material (main housing)	Polyamide (PA66)
Flammability class per UL94	V0
Clamping spring material	Copper alloy
Contact Plating	Tin

Mechanical data	
Solder pin arrangement	over the entire terminal strip (staggered)
Number of solder pins per potential	1
Solder pin length	3.6 mm
Solder pin dimensions	0.4 x 0.75 mm
Drilled hole diameter	1.1 $^{(+0.1)}$ mm

Environmental requirements	
Limit temperature range	-60 … +105 °C

Marking	Page 1066
Test and measurement	Page 1088
Tool	Page 1072
See technical section for further information	
Approvals and corresponding ratings, visit www.wago.com	

PCB terminal block ▸ 250 Series

Push-in CAGE CLAMP® ▸ Actuation type: Push-button ▸ 0.5 mm² ▸ Solder pin arrangement: over the entire terminal strip (staggered) ▸ Color: gray

Pin spacing: 2.5 mm / 0.098 inches

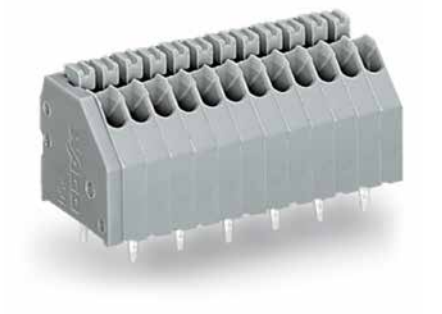

250-412

Pole number	Item No.	PU (SPU)
2	250-402	720 (180)
3	250-403	520 (130)
4	250-404	400 (100)
5	250-405	340 (85)
6	250-406	280 (70)
7	250-407	240 (60)
8	250-408	220 (55)
9	250-409	200 (50)
10	250-410	180 (45)
11	250-411	160 (40)
12	250-412	140 (35)
13	250-413	140 (35)
14	250-414	120 (30)
15	250-415	120 (30)
16	250-416	100 (25)
17	250-417	100 (25)
18	250-418	80 (20)
19	250-419	80 (20)
20	250-420	80 (20)
21	250-421	80 (20)
22	250-422	80 (20)
23	250-423	60 (15)
24	250-424	60 (15)

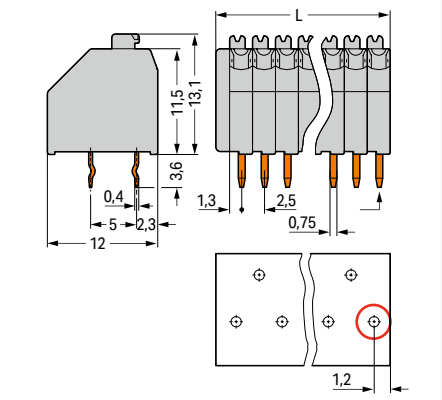

L = (pole no. x pin spacing) + 1.5 mm
First solder pin, front right (red circle)

Pin spacing: 2.54 mm / 0.1 inches

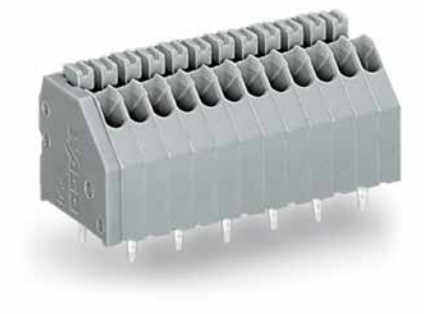

250-1412

Pole number	Item No.	PU (SPU)
2	250-1402	720 (180)
3	250-1403	520 (130)
4	250-1404	400 (100)
5	250-1405	340 (85)
6	250-1406	280 (70)
7	250-1407	240 (60)
8	250-1408	200 (50)
9	250-1409	180 (45)
10	250-1410	160 (40)
11	250-1411	160 (40)
12	250-1412	140 (35)
13	250-1413	120 (30)
14	250-1414	120 (30)
15	250-1415	120 (30)
16	250-1416	100 (25)
17	250-1417	100 (25)
18	250-1418	100 (25)
19	250-1419	80 (20)
20	250-1420	80 (20)
21	250-1421	80 (20)
22	250-1422	80 (20)
23	250-1423	80 (20)
24	250-1424	60 (15)

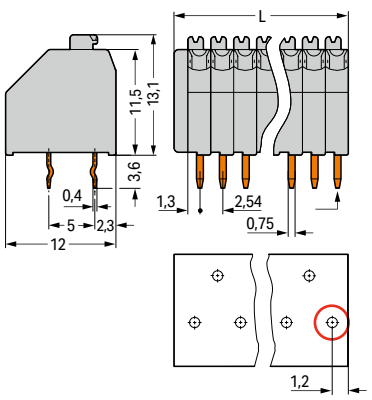

L = (pole no. x pin spacing) + 1.5 mm
First solder pin, front right (red circle)

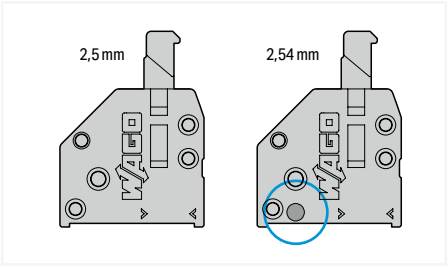

A groove at the back of the terminal strip differentiates between the two pin spacings.

PU = packaging unit; SPU = subpackaging unit; Dimensions in mm

Variants:
- Other pole numbers
- Other colors
- Mixed-color PCB connector strips
- Terminal strips with spacers
- Direct marking
- Other versions (or variants) can be requested from WAGO Sales or configured at https://configurator.wago.com/.

PCB terminal block ▸ 250 Series

Push-in CAGE CLAMP® ▸ Actuation type: Push-button ▸ 1.5 mm² ▸ Solder pin arrangement: over the entire terminal strip (in-line) ▸ Pin spacing: 3.5 mm / 0.138 inches ▸ Color: gray

1



- Compact terminal strips with push-buttons
- Push-in terminations of solid and ferruled conductors
- Termination/removal of fine-stranded conductors via push-buttons
- 45° conductor entry angle provides easy, space-saving wiring
- Custom color combinations
- Terminal strips also available with spacers upon request

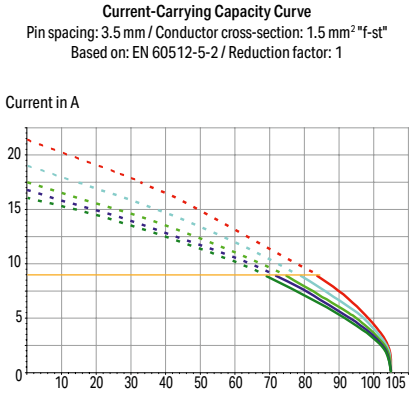

Electrical data			
Pin spacing	**3.5 mm / 0.138 inches**		
Ratings per	**IEC/EN 60664-1**		
Overvoltage category	III	III	II
Pollution degree	3	2	2
Nominal voltage	160 V	160 V	320 V
Rated impulse withstand voltage	2.5 kV	2.5 kV	2.5 kV
Rated current	8 A	8 A	8 A
Approvals per	**UL 1059**		
Use group	B	C	D
Rated voltage	300 V	-	300 V
Rated current	5 A	-	5 A
Approvals per	**CSA**		
Use group	B	C	D
Rated voltage	300 V	-	300 V
Rated current	10 A	-	10 A

Connection Data	
Connection technology	Push-in CAGE CLAMP®
Strip length	8.5 … 9.5 mm / 0.33 … 0.37 inches
Conductor connection direction to PCB	45 °
Solid conductor	0.2 … 1.5 mm² / 24 … 16 AWG
Fine-stranded conductor	0.2 … 1.5 mm² / 24 … 16 AWG
Fine-stranded conductor; with insulated ferrule	0.25 … 1 mm²
Fine-stranded conductor; with uninsulated ferrule	0.25 … 1 mm²

Material data	
Material group	I
Insulation material (main housing)	Polyamide (PA66)
Flammability class per UL94	V0
Clamping spring material	Copper alloy
Contact Plating	Tin

Mechanical data	
Solder pin arrangement	over the entire terminal strip (in-line)
Number of solder pins per potential	1
Solder pin length	3.4 mm
Solder pin dimensions	0.4 x 0.75 mm
Drilled hole diameter	1.1 $^{(+0.1)}$ mm

Environmental requirements	
Limit temperature range	-60 … +105 °C

Marking	Page 1066
Test and measurement	Page 1088
Tool	Page 1072
See technical section for further information	
Approvals and corresponding ratings, visit www.wago.com	

PCB terminal block ▸ 250 Series

Push-in CAGE CLAMP® ▸ Actuation type: Push-button ▸ 1.5 mm² ▸ Solder pin arrangement: over the entire terminal strip (in-line) ▸ Pin spacing: 3.5 mm / 0.138 inches ▸ Color: gray

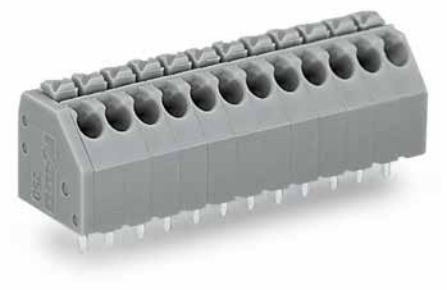

250-112

Pole number	Item No.	PU (SPU)
2	**250-102**	560 (140)
3	**250-103**	400 (100)
4	**250-104**	300 (75)
5	**250-105**	240 (60)
6	**250-106**	200 (50)
7	**250-107**	180 (45)
8	**250-108**	160 (40)
9	**250-109**	140 (35)
10	**250-110**	120 (30)
11	**250-111**	120 (30)
12	**250-112**	100 (25)
13	**250-113**	100 (25)
14	**250-114**	80 (20)
15	**250-115**	80 (20)
16	**250-116**	80 (20)
17	**250-117**	60 (15)
18	**250-118**	60 (15)
19	**250-119**	60 (15)
20	**250-120**	60 (15)
21	**250-121**	60 (15)
22	**250-122**	60 (15)
23	**250-123**	40 (10)
24	**250-124**	40 (10)

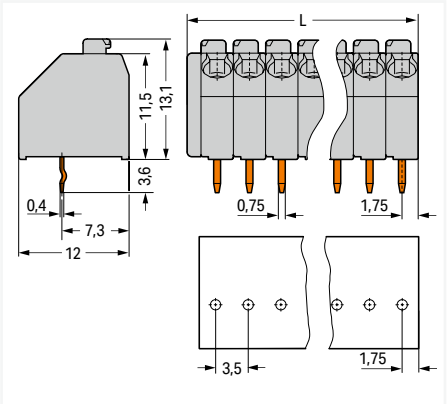

L = (pole no. x pin spacing) + 1.5 mm

PU = packaging unit; SPU = subpackaging unit; Dimensions in mm

Variants:

- Other pole numbers
- Other colors
- Mixed-color PCB connector strips
- Terminal strips with spacers
- Direct marking
- Other versions (or variants) can be requested from WAGO Sales or configured at https://configurator.wago.com/.

PCB terminal block ▸ 250 Series

Push-in CAGE CLAMP® ▸ Actuation type: Push-button ▸ 1.5 mm² ▸ Solder pin arrangement: over the entire terminal strip (staggered) ▸ Pin spacing: 3.5 mm / 0.138 inches ▸ Color: gray

1



- Compact terminal strips with push-buttons
- Push-in terminations of solid and ferruled conductors
- Termination/removal of fine-stranded conductors via push-buttons
- 45° conductor entry angle provides easy, space-saving wiring
- Custom color combinations
- Terminal strips also available with spacers upon request

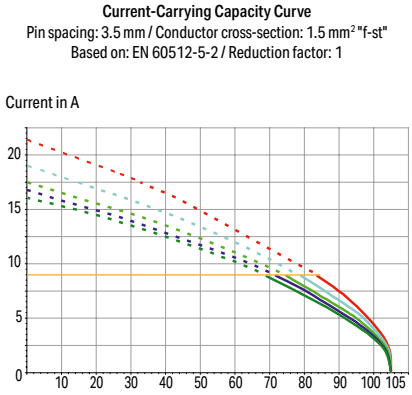

Electrical data			
Pin spacing	**3.5 mm / 0.138 inches**		
Ratings per	**IEC/EN 60664-1**		
Overvoltage category	III	III	II
Pollution degree	3	2	2
Nominal voltage	250 V	320 V	630 V
Rated impulse withstand voltage	4 kV	4 kV	4 kV
Rated current	8 A	8 A	8 A
Approvals per	**UL 1059**		
Use group	B	C	D
Rated voltage	300 V	-	300 V
Rated current	8 A	-	5 A
Approvals per	**CSA**		
Use group	B	C	D
Rated voltage	300 V	-	300 V
Rated current	10 A	-	10 A

Connection Data	
Connection technology	Push-in CAGE CLAMP®
Strip length	8.5 … 9.5 mm / 0.33 … 0.37 inches
Conductor connection direction to PCB	45 °
Solid conductor	0.2 … 1.5 mm² / 24 … 16 AWG
Fine-stranded conductor	0.2 … 1.5 mm² / 24 … 16 AWG
Fine-stranded conductor; with insulated ferrule	0.25 … 1 mm²
Fine-stranded conductor; with uninsulated ferrule	0.25 … 1 mm²

Material data	
Material group	I
Insulation material (main housing)	Polyamide (PA66)
Flammability class per UL94	V0
Clamping spring material	Copper alloy
Contact Plating	Tin

Mechanical data	
Solder pin arrangement	over the entire terminal strip (staggered)
Number of solder pins per potential	1
Solder pin length	3.4 mm
Solder pin dimensions	0.4 x 0.75 mm
Drilled hole diameter	1.1 $^{(+0.1)}$ mm

Environmental requirements	
Limit temperature range	-60 … +105 °C

Marking	Page 1066
Test and measurement	Page 1088
Tool	Page 1072
See technical section for further information	
Approvals and corresponding ratings, visit www.wago.com	

PCB terminal block ▸ 250 Series

Push-in CAGE CLAMP® ▸ Actuation type: Push-button ▸ 1.5 mm² ▸ Solder pin arrangement: over the entire terminal strip (staggered) ▸ Pin spacing: 3.5 mm / 0.138 inches ▸ Color: gray



250-212

Pole number	Item No.	PU (SPU)
2	**250-202**	560 (140)
3	**250-203**	400 (100)
4	**250-204**	300 (75)
5	**250-205**	240 (60)
6	**250-206**	200 (50)
7	**250-207**	180 (45)
8	**250-208**	160 (40)
9	**250-209**	140 (35)
10	**250-210**	120 (30)
11	**250-211**	120 (30)
12	**250-212**	100 (25)
13	**250-213**	100 (25)
14	**250-214**	80 (20)
15	**250-215**	80 (20)
16	**250-216**	80 (20)
17	**250-217**	60 (15)
18	**250-218**	60 (15)
19	**250-219**	60 (15)
20	**250-220**	60 (15)
21	**250-221**	60 (15)
22	**250-222**	60 (15)
23	**250-223**	40 (10)
24	**250-224**	40 (10)

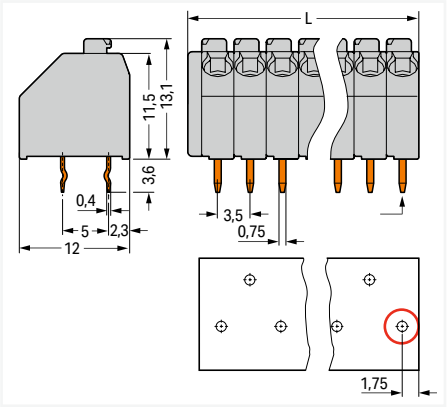

L = (pole no. x pin spacing) + 1.5 mm
First solder pin, front right (red circle)

PU = packaging unit; SPU = subpackaging unit; Dimensions in mm

Variants:
- Other pole numbers
- Other colors
- Mixed-color PCB connector strips
- Terminal strips with spacers
- Direct marking
- Other versions (or variants) can be requested from WAGO Sales or configured at https://configurator.wago.com/.

PCB terminal block ▸ 250 Series

Push-in CAGE CLAMP® ▸ Actuation type: Push-button ▸ 1.5 mm² ▸ Solder pin arrangement: over the entire terminal strip (in-line) ▸ Color: gray

1

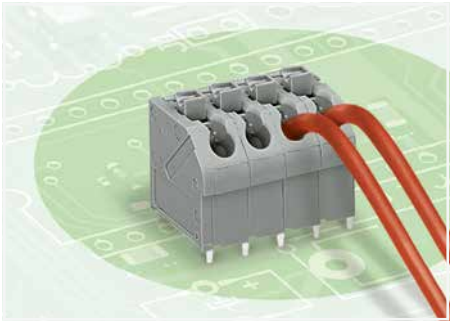

- Compact PCB terminal strips with push-buttons
- Push-in termination of solid conductors
- Termination/removal of fine-stranded conductors via push-buttons
- 45° conductor entry angle provides easy, space-saving wiring

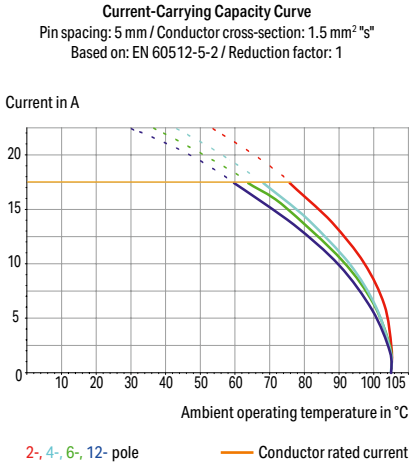

Electrical data						
Pin spacing	**5 mm / 0.197 inches**			**7.5 mm / 0.295 inches**		
Ratings per	**IEC/EN 60664-1**			**IEC/EN 60664-1**		
Overvoltage category	III	III	II	III	III	II
Pollution degree	3	2	2	3	2	2
Nominal voltage	320 V	320 V	630 V	500 V	630 V	1000 V
Rated impulse withstand voltage	4 kV	4 kV	4 kV	6 kV	6 kV	6 kV
Rated current	17.5 A	17.5 A	17.5 A	17.5 A	17.5 A	17.5 A
Approvals per	**UL 1059**			**UL 1059**		
Use group	B	C	D	B	C	D
Rated voltage	300 V	-	300 V	300 V	-	300 V
Rated current	10 A	-	10 A	10 A	-	10 A
Approvals per	**CSA**			**CSA**		
Use group	B	C	D	B	C	D
Rated voltage	300 V	-	300 V	300 V	-	300 V
Rated current	10 A	-	10 A	10 A	-	10 A

Connection Data	
Connection technology	Push-in CAGE CLAMP®
Strip length	9 … 10 mm / 0.35 … 0.39 inches
Conductor connection direction to PCB	45 °
Solid conductor	0.5 … 1.5 mm² / 20 … 14 AWG
Fine-stranded conductor	0.75 … 1.5 mm² / 18 … 16 AWG
Fine-stranded conductor; with insulated ferrule	0.5 … 1 mm²
Fine-stranded conductor; with uninsulated ferrule	0.5 … 1 mm²
Note (conductor cross-section)	Fine-stranded conductor 0.75 … 1.5 mm² (I max. 4 A) Fine-stranded conductor 0.5 mm² (I max. 2 A)

Material data	
Material group	I
Insulation material (main housing)	Polyamide (PA66)
Flammability class per UL94	V0
Clamping spring material	Chrome-nickel spring steel (CrNi)
Contact material	Electrolytic copper (E_{Cu})
Contact Plating	Tin

Mechanical data	
Solder pin arrangement	over the entire terminal strip (in-line)
Number of solder pins per potential	1
Solder pin length	4 mm
Solder pin dimensions	0.5 x 0.75 mm
Drilled hole diameter	1.2 $^{(+0.1)}$ mm

Environmental requirements	
Limit temperature range	-60 … +105 °C

Marking	Page 1067
Test and measurement	Page 1088
Tool	Page 1072
See technical section for further information	
Approvals and corresponding ratings, visit www.wago.com	

PCB terminal block ▸ 250 Series

Push-in CAGE CLAMP® ▸ Actuation type: Push-button ▸ 1.5 mm² ▸ Solder pin arrangement: over the entire terminal strip (in-line) ▸ Color: gray

Pin spacing: 5 mm / 0.197 inches



250-511

Pole number	Item No.	PU (SPU)
2	250-502	400 (100)
3	250-503	280 (70)
4	250-504	220 (55)
5	250-505	180 (45)
6	250-506	140 (35)
7	250-507	120 (30)
8	250-508	100 (25)
9	250-509	100 (25)
10	250-510	80 (20)
11	250-511	80 (20)
12	250-512	60 (15)
13	250-513	60 (15)
14	250-514	60 (15)
15	250-515	60 (15)
16	250-516	40 (10)

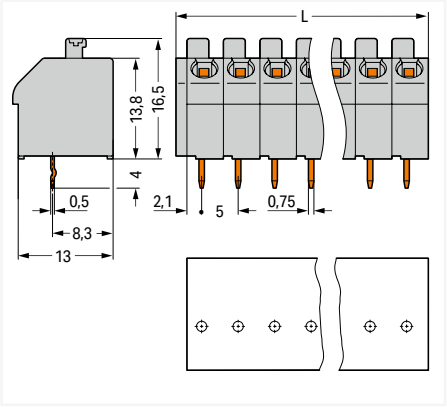

L = (pole no. x pin spacing) + 1.5 mm

Pin spacing: 7.5 mm / 0.295 inches



250-607

Pole number	Item No.	PU (SPU)
2	250-602	340 (85)
3	250-603	200 (50)
4	250-604	160 (40)
5	250-605	120 (30)
6	250-606	100 (25)
7	250-607	80 (20)
8	250-608	60 (15)
9	250-609	60 (15)
10	250-610	60 (15)
11	250-611	40 (10)
12	250-612	40 (10)

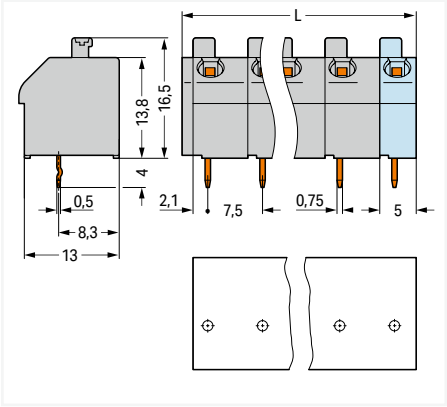

L = (pole no. – 1) x pin spacing + 5 mm + 1.5 mm

PU = packaging unit; SPU = subpackaging unit; Dimensions in mm

Variants:
- Other pole numbers
- Other colors
- Mixed-color PCB connector strips
- Direct marking
- Other versions (or variants) can be requested from WAGO Sales or configured at https://configurator.wago.com/.

Double-deck PCB terminal block ▸ 250 Series

Push-in CAGE CLAMP® ▸ Actuation type: Push-button ▸ 1.5 mm² ▸ Solder pin arrangement: over the entire terminal strip (in-line) ▸ Pin spacing: 5 mm / 0.197 inches ▸ Color: agate gray

1



- Space-saving, double-deck terminal strips with push-buttons
- Push-in termination of solid and ferruled conductors
- Termination/removal of fine-stranded conductors via push-buttons
- 45° conductor entry angle provides easy, space-saving wiring

Electrical data				
Pin spacing	**5 mm / 0.197 inches**			
Ratings per	**IEC/EN 60664-1**			
Overvoltage category	III	III	II	
Pollution degree	3	2	2	
Nominal voltage	320 V	320 V	630 V	
Rated impulse withstand voltage	4 kV	4 kV	4 kV	
Rated current	10 A	10 A	10 A	
Approvals per	**UL 1059**			
Use group	B	C	D	
Rated voltage	300 V	-	300 V	
Rated current	10 A	-	10 A	
Approvals per	**CSA**			
Use group	B	C	D	
Rated voltage	300 V	-	300 V	
Rated current	10 A	-	10 A	

Connection Data	
Connection technology	Push-in CAGE CLAMP®
Strip length	9 … 10 mm / 0.35 … 0.39 inches
Conductor connection direction to PCB	45 °
Solid conductor	0.5 … 1.5 mm² / 20 … 16 AWG
Fine-stranded conductor	0.75 … 1.5 mm²
Fine-stranded conductor; with insulated ferrule	0.5 … 1 mm²
Fine-stranded conductor; with uninsulated ferrule	0.5 … 1 mm²
Note (conductor cross-section)	Fine-stranded conductor 0.75 … 1.5 mm² (I max. 4 A) Fine-stranded conductor 0.5 mm² (I max. 2 A)

Material data	
Material group	I
Insulation material (main housing)	Polyamide (PA66)
Flammability class per UL94	V0
Clamping spring material	Chrome-nickel spring steel (CrNi)
Contact material	Electrolytic copper (E_{Cu})
Contact Plating	Tin

Mechanical data	
Solder pin arrangement	over the entire terminal strip (in-line)
Number of solder pins per potential	1
Solder pin length	4 mm
Solder pin dimensions	0.5 x 0.75 mm
Drilled hole diameter	1.2 $^{(+0.1\ \ldots\ +0.1)}$ mm

Environmental requirements	
Limit temperature range	-60 … +105 °C

Marking	Page 1067
Test and measurement	Page 1088
Tool	Page 1072
See technical section for further information	
Approvals and corresponding ratings, visit www.wago.com	

Double-deck PCB terminal block ▸ 250 Series

Push-in CAGE CLAMP® ▸ Actuation type: Push-button ▸ 1.5 mm² ▸ Solder pin arrangement: over the entire terminal strip (in-line) ▸ Pin spacing: 5 mm / 0.197 inches ▸ Color: agate gray

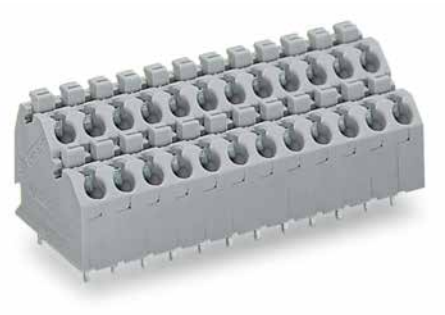

250-712

Pole number	Item No.	PU (SPU)
4	250-702	264 (66)
6	250-703	180 (45)
8	250-704	132 (33)
12	250-706	84 (21)
16	250-708	72 (18)
20	250-710	48 (12)
24	250-712	48 (12)
32	250-716	36 (9)

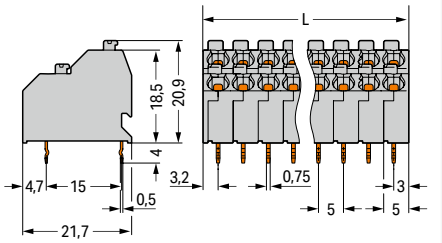

L = ((Polzahl / 2) x Rastermaß) + 1,2 mm

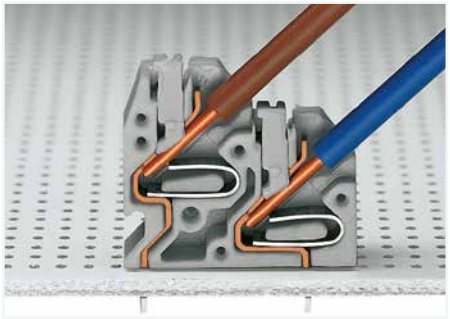

Space-saving wiring – push-in termination of solid conductors.

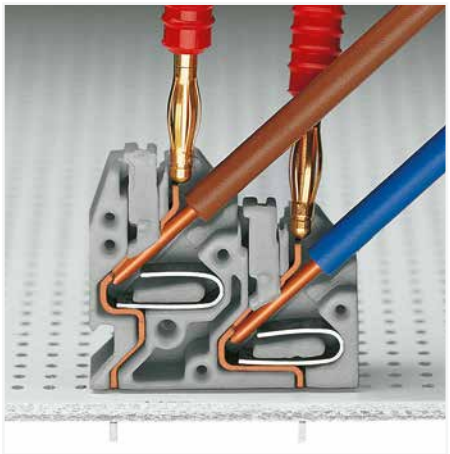

Testing with 2 mm Ø test plug – touch contact.

PU = packaging unit; SPU = subpackaging unit; Dimensions in mm

Variants:

- Other pole numbers
- Other colors
- Direct marking
- Other versions (or variants) can be requested from WAGO Sales or configured at https://configurator.wago.com/.

235 Series
Description and Installation

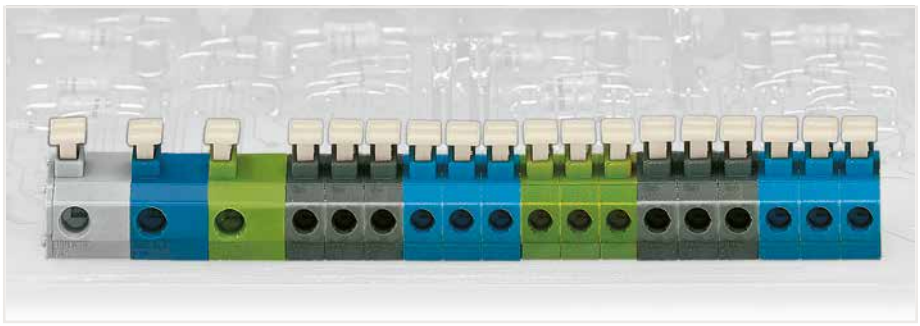

Combining terminal blocks with different housing colors and pin spacing.

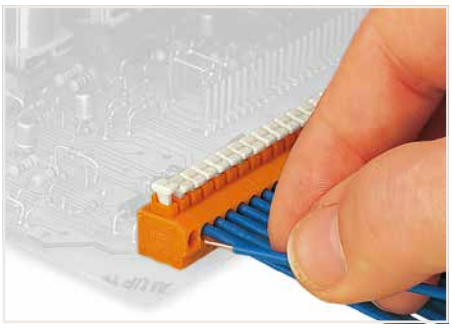

Inserting solid conductors via push-in termination.

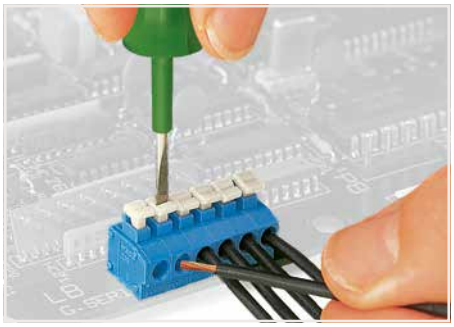

Inserting/removing fine-stranded conductors via push-button.

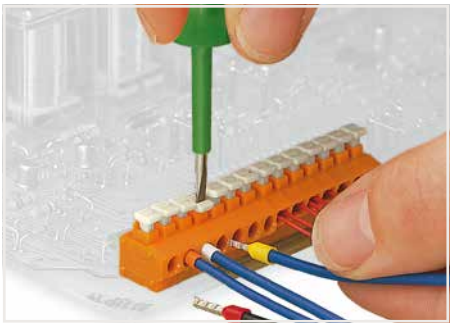

Inserting/removing fine-stranded conductors with ferrules via push-button.

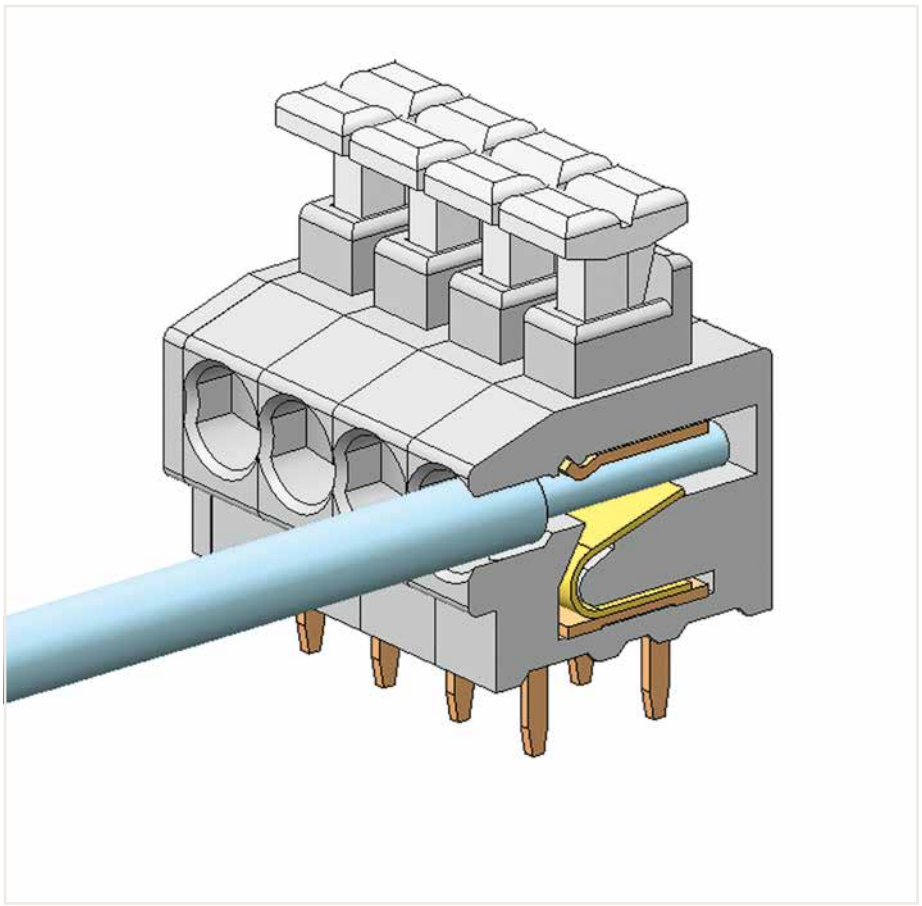

235 Series

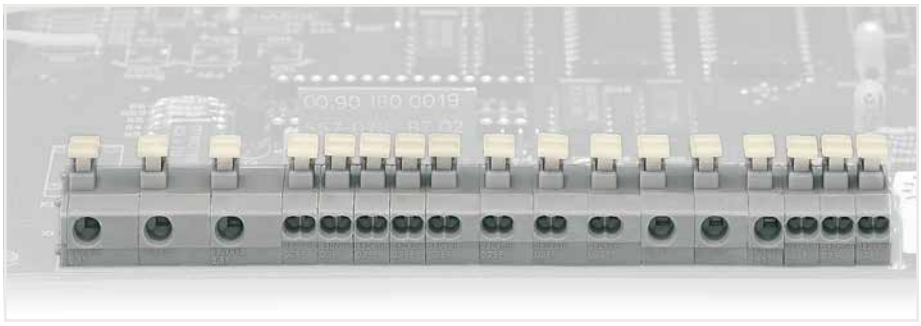

Combining 1- and 2-conductor terminal blocks with different pin spacing
2-conductor terminal blocks, see www.wago.com

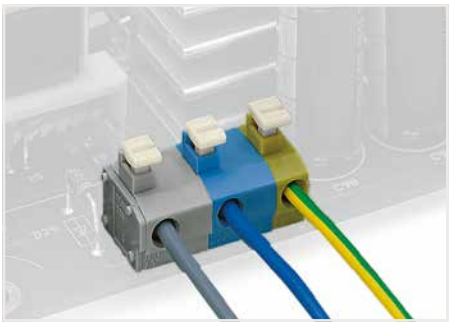

Application example: field-wiring terminal strip

Stackable PCB terminal block ▸ 235 Series

Push-in CAGE CLAMP® ▸ Actuation type: Push-button ▸ 1.5 mm²

1

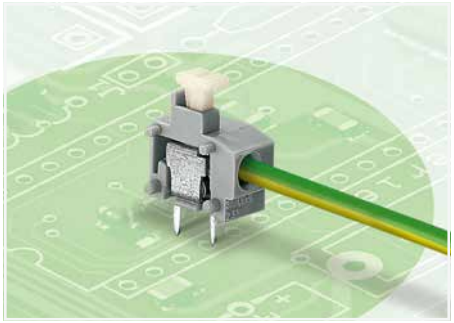

- Modular PCB terminal blocks with push-buttons for custom terminal strip assemblies
- Push-in termination of solid and ferruled conductors
- Convenient termination/removal of fine-stranded conductors via push-buttons
- Set to metric or inch pin spacing by compressing terminal strips or pulling them apart

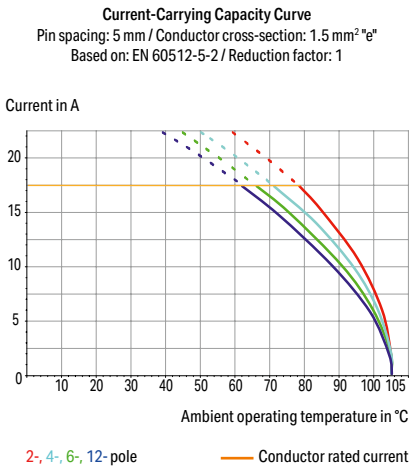

Electrical data									
Pin spacing	**5/5.08 mm / 0.197/0.2 inches**			**7.5/7.62 mm / 0.295/0.3 inches**			**10/10.16 mm / 0.394/0.4 inches**		
Ratings per	**IEC/EN 60664-1**			**IEC/EN 60664-1**			**IEC/EN 60664-1**		
Overvoltage category	III	III	II	III	III	II	III	III	II
Pollution degree	3	2	2	3	2	2	3	2	2
Nominal voltage	250 V	320 V	630 V	400 V	630 V	1000 V	630 V	1000 V	1000 V
Rated impulse withstand voltage	4 kV	4 kV	4 kV	6 kV	6 kV	6 kV	8 kV	8 kV	8 kV
Rated current	17.5 A	17.5 A	17.5 A	17.5 A	17.5 A	17.5 A	17.5 A	17.5 A	17.5 A
Approvals per	**UL 1059**			**UL 1059**			**UL 1059**		
Use group	B	C	D	B	C	D	B	C	D
Rated voltage	300 V	-	300 V	300 V	-	300 V	300 V	-	300 V
Rated current	10 A	-	10 A	10 A	-	10 A	10 A	-	10 A
Approvals per	**CSA**			**CSA**			**CSA**		
Use group	B	C	D	B	C	D	B	C	D
Rated voltage	300 V	-	-	300 V	-	-	300 V	-	-
Rated current	15 A	-	-	15 A	-	-	15 A	-	-

Connection Data	
Connection technology	Push-in CAGE CLAMP®
Strip length	9 … 10 mm / 0.35 … 0.39 inches
Conductor connection direction to PCB	0 °
Solid conductor	0.2 … 1.5 mm² / 20 … 14 AWG
Fine-stranded conductor	0.75 … 1.5 mm² / 20 … 14 AWG
Fine-stranded conductor; with insulated ferrule	0.25 … 1 mm²
Fine-stranded conductor; with uninsulated ferrule	0.25 … 1 mm²
Note (conductor cross-section)	Fine-stranded conductor 0.25 … 0.5 mm² (I max. 2 A) Fine-stranded conductor 0.75 … 1.5 mm² (I max. 6 A)

Material data	
Material group	I
Insulation material (main housing)	Polyamide (PA66)
Flammability class per UL94	V0
Clamping spring material	Chrome-nickel spring steel (CrNi)
Contact material	Electrolytic copper (E_{Cu})
Contact Plating	Tin

Mechanical data	
Solder pin arrangement	within the terminal block (in-line)
Number of solder pins per potential	2
Solder pin length	3.6 mm
Solder pin dimensions	0.4 x 0.8 mm
Drilled hole diameter	1 $^{(+0.1)}$ mm

Environmental requirements	
Limit temperature range	-60 … +105 °C

Marking	Page 1067
Tool	Page 1072
See technical section for further information	
Approvals and corresponding ratings, visit www.wago.com	

Stackable PCB terminal block ▸ 235 Series

Push-in CAGE CLAMP® ▸ Actuation type: Push-button ▸ 1.5 mm²

1

Pin spacing: 5/5.08 mm / 0.197/0.2 inches



235-401/331-000

Color	Item No.	PU (SPU)
gray	235-401/331-000	800 (100)
blue	235-744/331-000	800 (100)
orange	235-746/331-000	800 (100)
white	235-745/331-000	800 (100)
black	235-748/331-000	800 (100)
yellow	235-741/331-000	800 (100)
light gray	235-743/331-000	800 (100)
light green	235-747/331-000	800 (100)
violet	235-749/331-000	800 (100)
red	235-740/331-000	800 (100)
dark gray	235-742/331-000	800 (100)

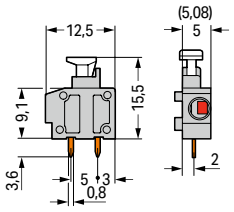

Pin spacing: 7.5/7.62 mm / 0.295/0.3 inches



235-501/331-000

Color	Item No.	PU (SPU)
gray	235-501/331-000	600 (100)
blue	235-754/331-000	600 (100)
orange	235-756/331-000	600 (100)
black	235-758/331-000	600 (100)
light gray	235-753/331-000	600 (100)
light green	235-757/331-000	600 (100)
dark gray	235-752/331-000	600 (100)

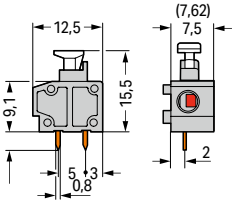

Pin spacing: 10/10.16 mm / 0.394/0.4 inches



235-801/331-000

Color	Item No.	PU (SPU)
gray	235-801/331-000	400 (100)
blue	235-764/331-000	400 (100)
orange	235-766/331-000	400 (100)
light green	235-767/331-000	400 (100)
dark gray	235-762/331-000	400 (100)

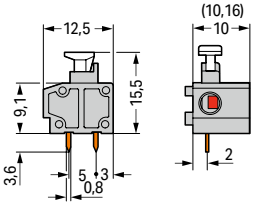

Accessories; for all products on this page



End plate; Width: 1 mm; snap-on type

Color	Item No.	PU (SPU)
gray	235-100	2000 (100)
blue	235-400	2000 (100)
orange	235-600	2000 (100)
white	235-850	2000 (100)
black	235-500	2000 (100)
yellow	235-550	2000 (100)
light gray	235-300	2000 (100)
light green	235-700	2000 (100)
violet	235-650	2000 (100)
red	235-800	2000 (100)
dark gray	235-200	2000 (100)



Intermediate plate; extends pin spacing; Width: 5 mm / 0.197 inches

Color	Item No.	PU (SPU)
gray	235-701	1000 (100)

PU = packaging unit; SPU = subpackaging unit; Dimensions in mm

Variants:

- Other colors
- Other versions (or variants) can be requested from WAGO Sales or configured at https://configurator.wago.com/.

PCB terminal block ▸ 235 Series

Push-in CAGE CLAMP® ▸ Actuation type: Push-button ▸ 1.5 mm² ▸ Pin spacing: 5/5.08 mm / 0.197/0.2 inches ▸ Color: gray

1

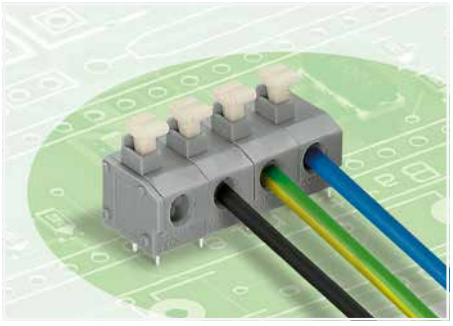

- PCB terminal strips with push-buttons
- Push-in termination of solid and ferruled conductors
- Convenient termination/removal of fine-stranded conductors via push-buttons
- Set to metric or inch pin spacing by compressing terminal strips or pulling them apart

Current-Carrying Capacity Curve
Pin spacing: 5 mm / Conductor cross-section: 1.5 mm² "e"
Based on: EN 60512-5-2 / Reduction factor: 1

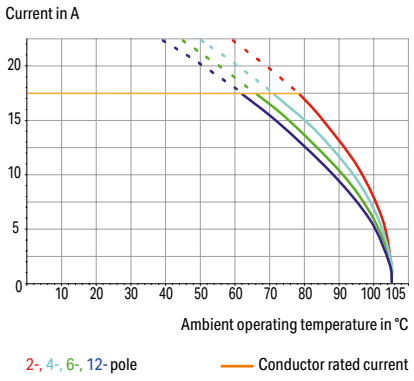

Electrical data			
Pin spacing	**5/5.08 mm / 0.197/0.2 inches**		
Ratings per	**IEC/EN 60664-1**		
Overvoltage category	III	III	II
Pollution degree	3	2	2
Nominal voltage	250 V	320 V	630 V
Rated impulse withstand voltage	4 kV	4 kV	4 kV
Rated current	17.5 A	17.5 A	17.5 A
Approvals per	**UL 1059**		
Use group	B	C	D
Rated voltage	300 V	-	300 V
Rated current	10 A	-	10 A
Approvals per	**CSA**		
Use group	B	C	D
Rated voltage	300 V	-	-
Rated current	15 A	-	-

Connection Data	
Connection technology	Push-in CAGE CLAMP®
Strip length	9 … 10 mm / 0.35 … 0.39 inches
Conductor connection direction to PCB	0 °
Solid conductor	0.2 … 1.5 mm² / 20 … 14 AWG
Fine-stranded conductor	0.75 … 1.5 mm² / 20 … 14 AWG
Fine-stranded conductor; with insulated ferrule	0.25 … 1 mm²
Fine-stranded conductor; with uninsulated ferrule	0.25 … 1 mm²
Note (conductor cross-section)	Fine-stranded conductor 0.25 … 0.5 mm² (I max. 2 A) Fine-stranded conductor 0.75 … 1.5 mm² (I max. 6 A)

Material data	
Material group	I
Insulation material (main housing)	Polyamide (PA66)
Flammability class per UL94	V0
Clamping spring material	Chrome-nickel spring steel (CrNi)
Contact material	Electrolytic copper (E_{Cu})
Contact Plating	Tin

Mechanical data	
Solder pin arrangement	over the entire terminal strip (in-line)
Number of solder pins per potential	2
Solder pin length	3.6 mm
Solder pin dimensions	0.4 x 0.8 mm
Drilled hole diameter	1 $^{(+0.1)}$ mm

Environmental requirements	
Limit temperature range	-60 … +105 °C

Marking	Page 1067
Tool	Page 1072
See technical section for further information	
Approvals and corresponding ratings, visit www.wago.com	

PCB terminal block ▸ 235 Series

Push-in CAGE CLAMP® ▸ Actuation type: Push-button ▸ 1.5 mm² ▸ Pin spacing: 5/5.08 mm / 0.197/0.2 inches ▸ Color: gray

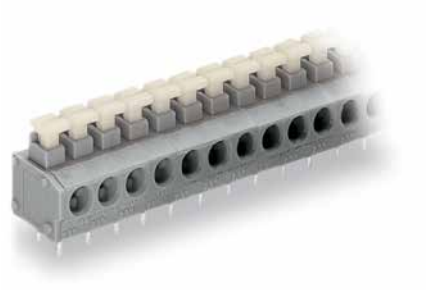

235-410/331-000

Pole number	Item No.	PU (SPU)
2	**235-402/331-000**	420 (105)
3	**235-403/331-000**	280 (70)
4	**235-404/331-000**	220 (55)
5	**235-405/331-000**	180 (45)
6	**235-406/331-000**	140 (35)
7	**235-407/331-000**	120 (30)
8	**235-408/331-000**	100 (25)
9	**235-409/331-000**	100 (25)
10	**235-410/331-000**	80 (20)
12	**235-412/331-000**	60 (15)

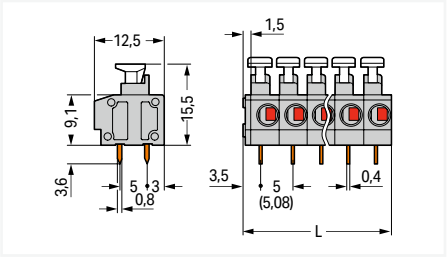

L = (pole no. x pin spacing) + 1.5 mm

PU = packaging unit; SPU = subpackaging unit; Dimensions in mm

Variants:

- Other pole numbers
- Other colors
- Terminal strips with 7.5/7.62 mm and 10/10.16 mm pin spacing
- Mixed-color PCB connector strips
- Direct marking
- Other versions (or variants) can be requested from WAGO Sales or configured at https://configurator.wago.com/.

Stackable PCB terminal block ▸ 235 Series

Push-in CAGE CLAMP® ▸ Actuation type: Push-button ▸ 1.5 mm² ▸ Pin spacing: 3.81 mm / 0.15 inches

1

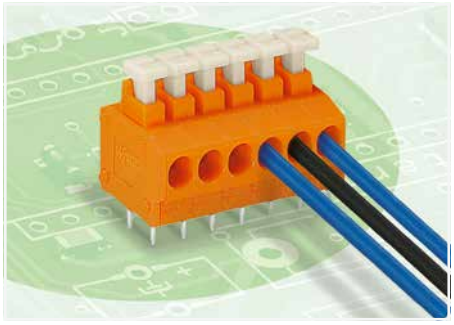

- Push-in termination of solid and ferruled conductors
- Convenient termination/removal of fine-stranded conductors via push-buttons

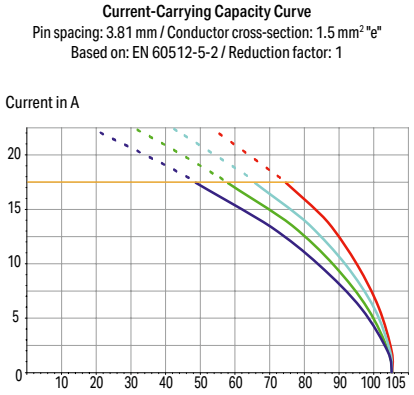

Electrical data			
Pin spacing	**3.81 mm / 0.15 inches**		
Ratings per	**IEC/EN 60664-1**		
Overvoltage category	III	III	II
Pollution degree	3	2	2
Nominal voltage	200 V	320 V	500 V
Rated impulse withstand voltage	4 kV	4 kV	4 kV
Rated current	17.5 A	17.5 A	17.5 A
Approvals per	**UL 1059**		
Use group	B	C	D
Rated voltage	300 V	-	300 V
Rated current	10 A	-	10 A
Approvals per	**CSA**		
Use group	B	C	D
Rated voltage	300 V	-	-
Rated current	10 A	-	-

Connection Data	
Connection technology	Push-in CAGE CLAMP®
Strip length	9 … 10 mm / 0.35 … 0.39 inches
Conductor connection direction to PCB	0 °
Solid conductor	0.5 … 1.5 mm² / 20 … 16 AWG
Fine-stranded conductor	0.75 … 1.5 mm² / 20 … 16 AWG
Fine-stranded conductor; with insulated ferrule	0.25 … 1 mm²
Fine-stranded conductor; with uninsulated ferrule	0.25 … 1 mm²
Note (conductor cross-section)	Fine-stranded conductor 0.75 … 1.5 mm² / 18 … 16 AWG (I max. 4 A)

Material data	
Material group	I
Insulation material (main housing)	Polyamide (PA66)
Flammability class per UL94	V0
Clamping spring material	Chrome-nickel spring steel (CrNi)
Contact material	Electrolytic copper (E_{Cu})
Contact Plating	Tin

Mechanical data	
Solder pin arrangement	within the terminal block (in-line)
Number of solder pins per potential	2
Solder pin length	3.6 mm
Solder pin dimensions	0.4 x 0.8 mm
Drilled hole diameter	1 $^{(+0.1)}$ mm

Environmental requirements	
Limit temperature range	-60 … +105 °C

Marking	Page 1066
Tool	Page 1072
See technical section for further information	
Approvals and corresponding ratings, visit www.wago.com	

Stackable PCB terminal block ▸ 235 Series

Push-in CAGE CLAMP® ▸ Actuation type: Push-button ▸ 1.5 mm² ▸ Pin spacing: 3.81 mm / 0.15 inches



235-101

Color	Item No.	PU (SPU)
gray	235-771	800 (100)
blue	235-774	800 (100)
orange	235-101	800 (100)
white	235-775	800 (100)
black	235-778	800 (100)
yellow	235-776	800 (100)
light green	235-777	800 (100)
red	235-770	800 (100)
dark gray	235-772	800 (100)

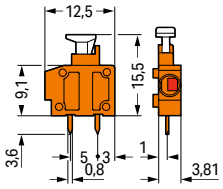

Accessories; for all products on this page



End plate; Width: 1 mm; snap-on type

Color	Item No.	PU (SPU)
gray	235-100	2000 (100)
blue	235-400	2000 (100)
orange	235-600	2000 (100)
white	235-850	2000 (100)
black	235-500	2000 (100)
yellow	235-550	2000 (100)
light green	235-700	2000 (100)
red	235-800	2000 (100)
dark gray	235-200	2000 (100)

PU = packaging unit; SPU = subpackaging unit; Dimensions in mm

Variants:

- Other colors
- Other versions (or variants) can be requested from WAGO Sales or configured at https://configurator.wago.com/.

PCB terminal block ▸ 235 Series

Push-in CAGE CLAMP® ▸ Actuation type: Push-button ▸ 1.5 mm² ▸ Pin spacing: 3.81 mm / 0.15 inches ▸ Color: orange

1

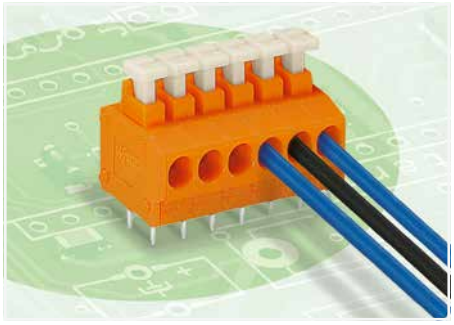

- PCB terminal strips with push-buttons
- Push-in termination of solid and ferruled conductors
- Convenient termination/removal of fine-stranded conductors via push-buttons

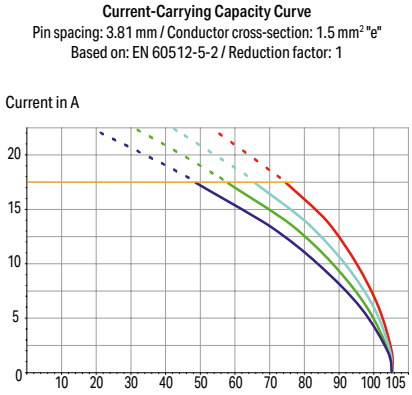

Electrical data			
Pin spacing	**3.81 mm / 0.15 inches**		
Ratings per	**IEC/EN 60664-1**		
Overvoltage category	III	III	II
Pollution degree	3	2	2
Nominal voltage	200 V	320 V	500 V
Rated impulse withstand voltage	4 kV	4 kV	4 kV
Rated current	17.5 A	17.5 A	17.5 A
Approvals per	**UL 1059**		
Use group	B	C	D
Rated voltage	300 V	-	300 V
Rated current	10 A	-	10 A
Approvals per	**CSA**		
Use group	B	C	D
Rated voltage	300 V	-	-
Rated current	10 A	-	-

Connection Data	
Connection technology	Push-in CAGE CLAMP®
Strip length	9 … 10 mm / 0.35 … 0.39 inches
Conductor connection direction to PCB	0 °
Solid conductor	0.5 … 1.5 mm² / 20 … 16 AWG
Fine-stranded conductor	0.75 … 1.5 mm² / 20 … 16 AWG
Fine-stranded conductor; with insulated ferrule	0.25 … 1 mm²
Fine-stranded conductor; with uninsulated ferrule	0.25 … 1 mm²
Note (conductor cross-section)	Fine-stranded conductor 0.75 … 1.5 mm² / 18 … 16 AWG (I max. 4 A)

Material data	
Material group	I
Insulation material (main housing)	Polyamide (PA66)
Flammability class per UL94	V0
Clamping spring material	Chrome-nickel spring steel (CrNi)
Contact material	Electrolytic copper (E_{Cu})
Contact Plating	Tin

Mechanical data	
Solder pin arrangement	over the entire terminal strip (in-line)
Number of solder pins per potential	2
Solder pin length	3.6 mm
Solder pin dimensions	0.4 x 0.8 mm
Drilled hole diameter	1 $^{(+0.1)}$ mm

Environmental requirements	
Limit temperature range	-60 … +105 °C

Marking Page 1066
Tool Page 1072

See technical section for further information

Approvals and corresponding ratings, visit www.wago.com

PCB terminal block ▸ 235 Series

Push-in CAGE CLAMP® ▸ Actuation type: Push-button ▸ 1.5 mm² ▸ Pin spacing: 3.81 mm / 0.15 inches ▸ Color: orange

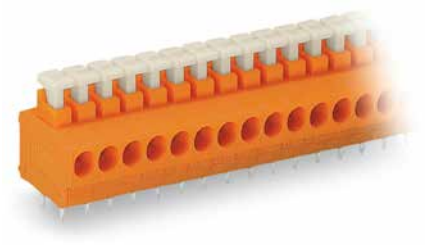

235-112

Pole number	Item No.	PU (SPU)
2	**235-102**	520 (130)
3	**235-103**	360 (90)
4	**235-104**	280 (70)
5	**235-105**	220 (55)
6	**235-106**	180 (45)
7	**235-107**	160 (40)
8	**235-108**	140 (35)
9	**235-109**	120 (30)
10	**235-110**	120 (30)
12	**235-112**	100 (25)

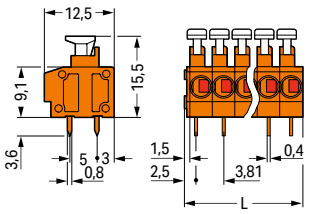

L = (pole no. x pin spacing) + 1.5 mm

PU = packaging unit; SPU = subpackaging unit; Dimensions in mm

Variants:

- Other pole numbers
- Other colors
- Mixed-color PCB connector strips
- Direct marking
- Other versions (or variants) can be requested from WAGO Sales or configured at https://configurator.wago.com/.

805 Series
Description and Installation

1

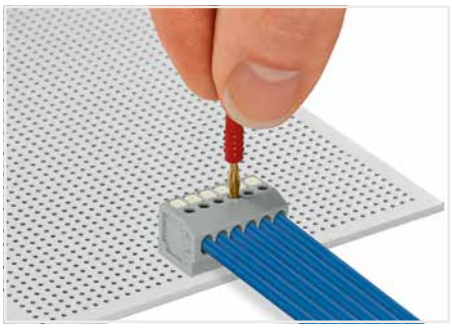

Testing with 2 mm Ø test plug.

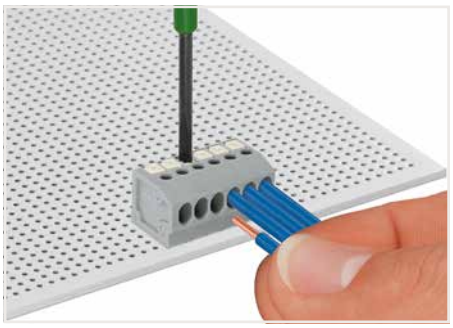

Terminating solid conductors by simply pushing them in. Removing conductors and inserting fine-stranded conductors via push-buttons.



Mixed-color terminal strips are available upon request.



Terminal strips with spacers and enlarged conductor entry (5 mm pin spacing) are available upon request.



WAGO's 805 Series Terminal Strips provide "internal commoning" to meet requirements that ban routing the ground conductor over the board. This enables custom terminal strips to be commoned and marked at the factory upon request.

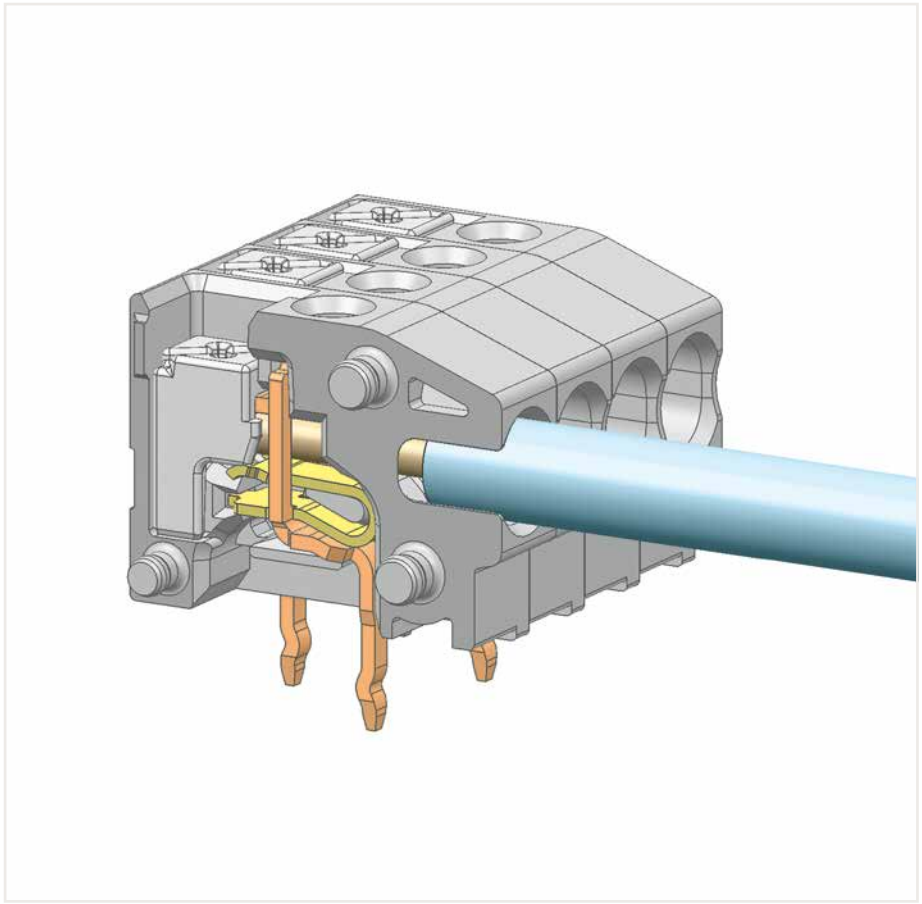

805 Series

804 Series
Description and Installation

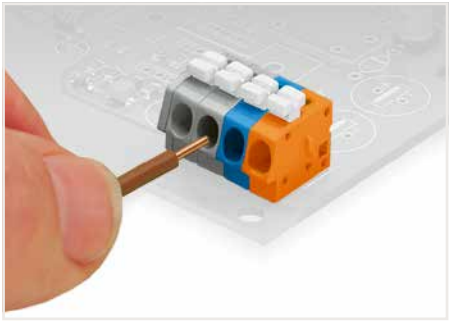

Terminating solid conductors: Simply push in stripped conductor until it hits backstop.

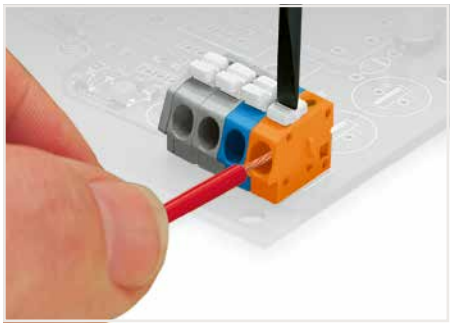

Inserting/removing fine-stranded conductors: Open the clamping unit via push-button and insert stripped conductor until it hits backstop.

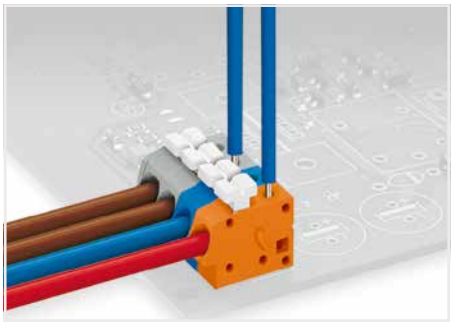

Testing with 1 mm Ø test pin – manual touch contact.

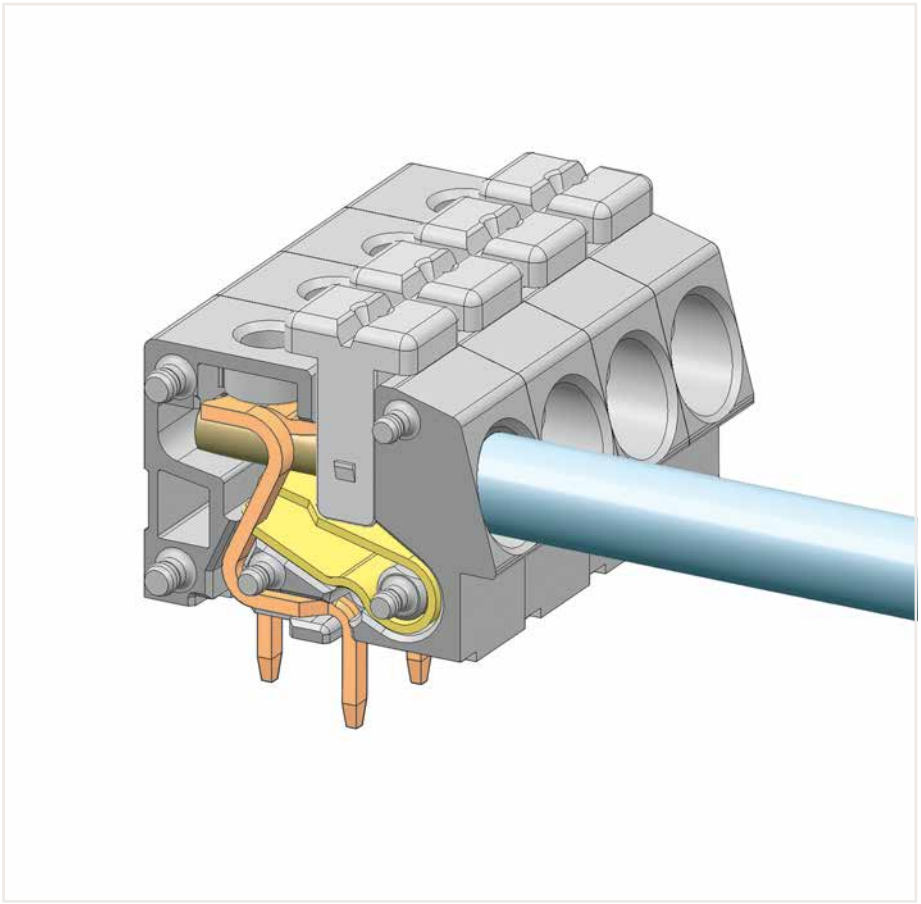

804 Series

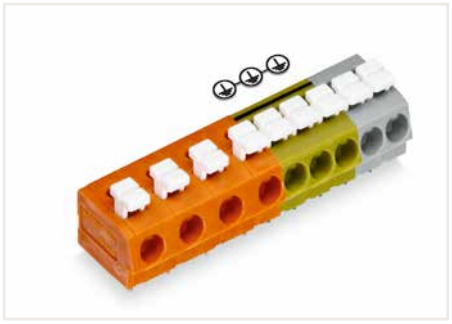

WAGO's 804 Series Terminal Strips provide "internal commoning" to meet requirements that ban routing the ground conductor over the board. This enables custom terminal strips to be commoned and marked at the factory upon request.

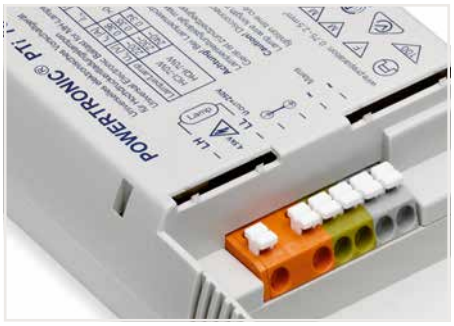

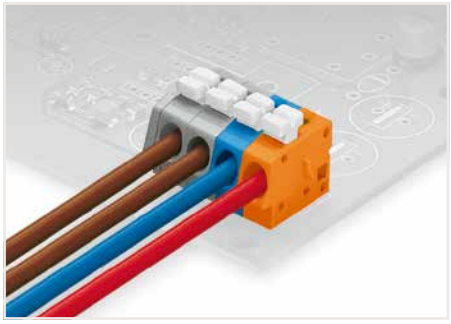

Mixed-color terminal strips are available upon request.

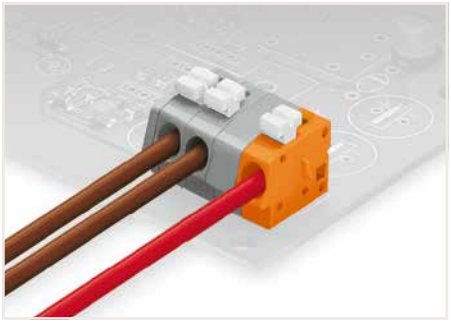

Terminal strips with spacer are available upon request.



Labeling via self-adhesive marking strips or factory direct marking.

PCB terminal block ▸ 805 Series

Push-in CAGE CLAMP® ▸ Actuation type: Push-button ▸ 1.5 mm² ▸ Solder pin arrangement: over the entire terminal strip (in-line) ▸ Pin spacing: 3.5 mm / 0.138 inches ▸ Color: gray

1

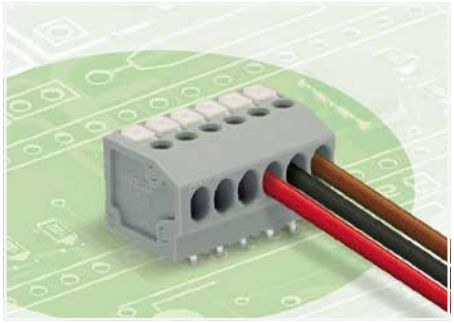

- PCB terminal strips with push-buttons and Push-in CAGE CLAMP® connection
- Push-in termination of solid and ferruled conductors
- Flush-mount push-buttons that close with minimal force for convenient termination/removal of fine-stranded conductors
- Convenient, tool-free operation
- Versions with/without test slots and spacers
- Versions available with custom internal commoning (factory assembly), e.g., commoning ground conductor

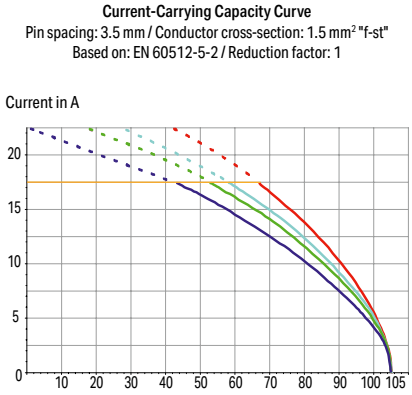

Electrical data			
Pin spacing	**3.5 mm / 0.138 inches**		
Ratings per	**IEC/EN 60664-1**		
Overvoltage category	III	III	II
Pollution degree	3	2	2
Nominal voltage	160 V	160 V	320 V
Rated impulse withstand voltage	2.5 kV	2.5 kV	2.5 kV
Rated current	17.5 A	17.5 A	17.5 A
Approvals per	**UL 1059**		
Use group	B	C	D
Rated voltage	300 V	150 V	300 V
Rated current	10 A	10 A	10 A

Connection Data	
Connection technology	Push-in CAGE CLAMP®
Strip length	9 … 10 mm / 0.35 … 0.39 inches
Conductor connection direction to PCB	0 °
Solid conductor	0.2 … 1.5 mm² / 24 … 16 AWG
Fine-stranded conductor	0.2 … 1.5 mm² / 24 … 16 AWG
Fine-stranded conductor; with insulated ferrule	0.25 … 1 mm²
Fine-stranded conductor; with uninsulated ferrule	0.25 … 1 mm²

Material data	
Material group	I
Insulation material (main housing)	Polyamide (PA66)
Flammability class per UL94	V0
Clamping spring material	Chrome-nickel spring steel (CrNi)
Contact material	Electrolytic copper (E_{Cu})
Contact Plating	Tin

Mechanical data	
Solder pin arrangement	over the entire terminal strip (in-line)
Number of solder pins per potential	1
Solder pin length	3.2 mm
Solder pin dimensions	0.5 x 0.75 mm
Drilled hole diameter	1.1 $^{(+0.1)}$ mm

Environmental requirements	
Limit temperature range	-60 … +105 °C

Marking	Page 1066
Test and measurement	Page 1088
Tool	Page 1072
See technical section for further information	
Approvals and corresponding ratings, visit www.wago.com	

PCB terminal block ▸ 805 Series

Push-in CAGE CLAMP® ▸ Actuation type: Push-button ▸ 1.5 mm² ▸ Solder pin arrangement: over the entire terminal strip (in-line) ▸ Pin spacing: 3.5 mm / 0.138 inches ▸ Color: gray

Number of test slots: 0



805-356

Pole number	Item No.	PU (SPU)
2	805-352	600 (150)
3	805-353	420 (105)
4	805-354	300 (75)
5	805-355	260 (65)
6	805-356	220 (55)
7	805-357	180 (45)
8	805-358	160 (40)
9	805-359	140 (35)
10	805-360	120 (30)
11	805-361	100 (25)
12	805-362	100 (25)
13	805-363	100 (25)
14	805-364	100 (25)
15	805-365	80 (20)
16	805-366	80 (20)
17	805-367	80 (20)
18	805-368	60 (15)
19	805-369	60 (15)
20	805-370	60 (15)
21	805-371	60 (15)
22	805-372	60 (15)
23	805-373	60 (15)
24	805-374	40 (10)

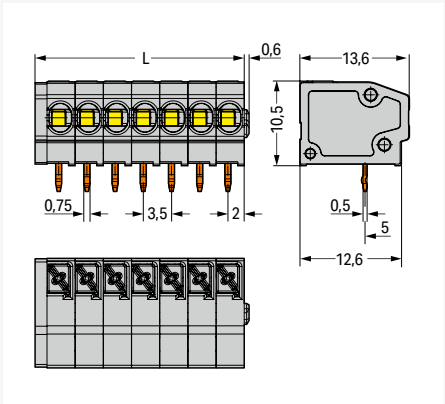

L = (pole no. x pin spacing) + 1.5 mm

Number of test slots: 1



805-156

Pole number	Item No.	PU (SPU)
2	805-152	600 (150)
3	805-153	420 (105)
4	805-154	320 (80)
5	805-155	260 (65)
6	805-156	220 (55)
7	805-157	180 (45)
8	805-158	160 (40)
9	805-159	140 (35)
10	805-160	120 (30)
11	805-161	100 (25)
12	805-162	100 (25)
13	805-163	100 (25)
14	805-164	100 (25)
15	805-165	80 (20)
16	805-166	80 (20)
17	805-167	80 (20)
18	805-168	60 (15)
19	805-169	60 (15)
20	805-170	60 (15)
21	805-171	60 (15)
22	805-172	60 (15)
23	805-173	60 (15)
24	805-174	40 (10)

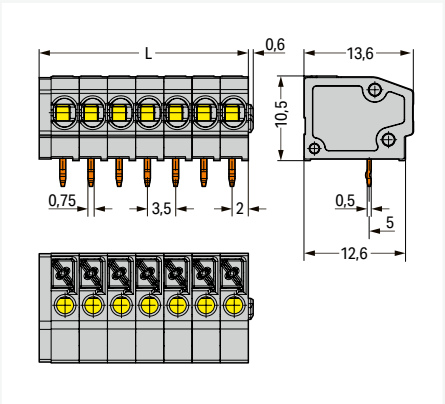

L = (pole no. x pin spacing) + 1.5 mm

PU = packaging unit; SPU = subpackaging unit; Dimensions in mm

Variants:
- Other pole numbers
- Other colors
- Mixed-color PCB connector strips
- Direct marking
- Other versions (or variants) can be requested from WAGO Sales or configured at https://configurator.wago.com/.

PCB terminal block ▸ 805 Series

Push-in CAGE CLAMP® ▸ Actuation type: Push-button ▸ 1.5 mm² ▸ Solder pin arrangement: over the entire terminal strip (staggered) ▸ Pin spacing: 3.5 mm / 0.138 inches ▸ Color: gray

1

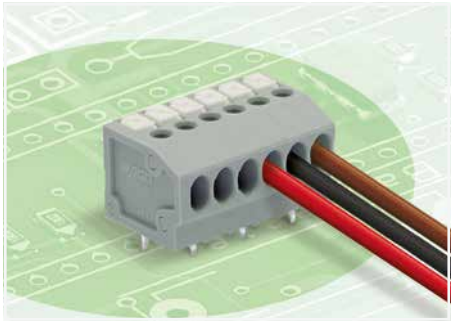

- PCB terminal strips with push-buttons and Push-in CAGE CLAMP® connection
- Push-in termination of solid and ferruled conductors
- Flush-mount push-buttons that close with minimal force for convenient termination/removal of fine-stranded conductors
- Convenient, tool-free operation
- Versions with/without test slots and spacers
- Versions available with custom internal commoning (factory assembly), e.g., commoning ground conductor

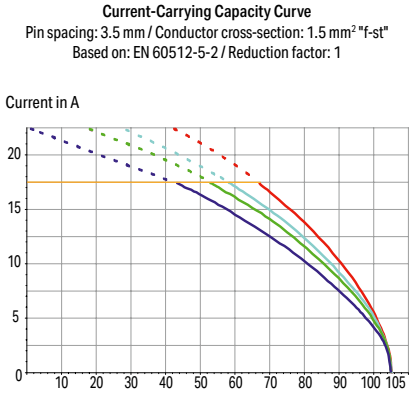

Electrical data			
Pin spacing	**3.5 mm / 0.138 inches**		
Ratings per	**IEC/EN 60664-1**		
Overvoltage category	III	III	II
Pollution degree	3	2	2
Nominal voltage	250 V	320 V	630 V
Rated impulse withstand voltage	4 kV	4 kV	4 kV
Rated current	17.5 A	17.5 A	17.5 A
Approvals per	**UL 1059**		
Use group	B	C	D
Rated voltage	300 V	150 V	300 V
Rated current	10 A	10 A	10 A

Connection Data	
Connection technology	Push-in CAGE CLAMP®
Strip length	9 … 10 mm / 0.35 … 0.39 inches
Conductor connection direction to PCB	0 °
Solid conductor	0.2 … 1.5 mm² / 24 … 16 AWG
Fine-stranded conductor	0.2 … 1.5 mm² / 24 … 16 AWG
Fine-stranded conductor; with insulated ferrule	0.25 … 1 mm²
Fine-stranded conductor; with uninsulated ferrule	0.25 … 1 mm²

Material data	
Material group	I
Insulation material (main housing)	Polyamide (PA66)
Flammability class per UL94	V0
Clamping spring material	Chrome-nickel spring steel (CrNi)
Contact material	Electrolytic copper (E_{Cu})
Contact Plating	Tin

Mechanical data	
Solder pin arrangement	over the entire terminal strip (staggered)
Number of solder pins per potential	1
Solder pin length	3.2 mm
Solder pin dimensions	0.5 x 0.75 mm
Drilled hole diameter	1.1 $^{(+0.1)}$ mm

Environmental requirements	
Limit temperature range	-60 … +105 °C

Marking	Page 1066
Test and measurement	Page 1088
Tool	Page 1072
See technical section for further information	
Approvals and corresponding ratings, visit www.wago.com	

PCB terminal block ▸ 805 Series

Push-in CAGE CLAMP® ▸ Actuation type: Push-button ▸ 1.5 mm² ▸ Solder pin arrangement: over the entire terminal strip (staggered) ▸ Pin spacing: 3.5 mm / 0.138 inches ▸ Color: gray

Number of test slots: 0



805-306

Pole number	Item No.	PU (SPU)	Pole number	Item No.	PU (SPU)
2	**805-302**	580 (145)	14	**805-314**	100 (25)
3	**805-303**	420 (105)	15	**805-315**	80 (20)
4	**805-304**	320 (80)	16	**805-316**	80 (20)
5	**805-305**	260 (65)	17	**805-317**	80 (20)
6	**805-306**	220 (55)	18	**805-318**	60 (15)
7	**805-307**	180 (45)	19	**805-319**	60 (15)
8	**805-308**	160 (40)	20	**805-320**	60 (15)
9	**805-309**	140 (35)	21	**805-321**	60 (15)
10	**805-310**	120 (30)	22	**805-322**	60 (15)
11	**805-311**	100 (25)	23	**805-323**	60 (15)
12	**805-312**	100 (25)	24	**805-324**	40 (10)
13	**805-313**	100 (25)			

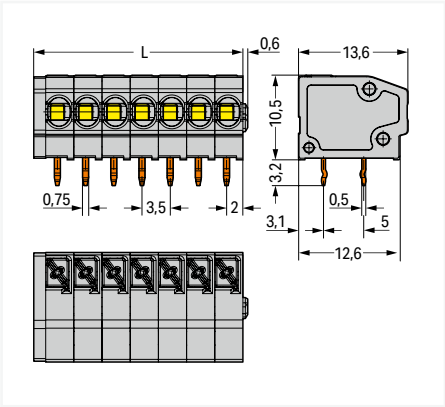

L = (pole no. x pin spacing) + 1.5 mm

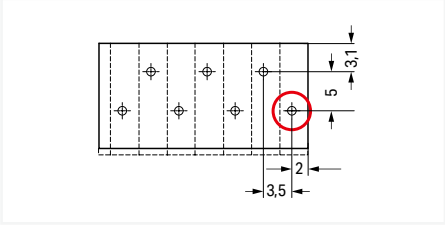

First solder pin, front right (red circle)

PU = packaging unit; SPU = subpackaging unit; Dimensions in mm

Variants:
- Other pole numbers
- Other colors
- Mixed-color PCB connector strips
- Direct marking
- Other versions (or variants) can be requested from WAGO Sales or configured at https://configurator.wago.com/.

PCB terminal block ▸ 805 Series

Push-in CAGE CLAMP® ▸ Actuation type: Push-button ▸ 1.5 mm² ▸ Solder pin arrangement: over the entire terminal strip (staggered) ▸ Pin spacing: 3.5 mm / 0.138 inches ▸ Color: gray

Number of test slots: 1

1



805-106

Pole number	Item No.	PU (SPU)
2	805-102	580 (145)
3	805-103	420 (105)
4	805-104	320 (80)
5	805-105	260 (65)
6	805-106	220 (55)
7	805-107	180 (45)
8	805-108	160 (40)
9	805-109	140 (35)
10	805-110	120 (30)
11	805-111	100 (25)
12	805-112	100 (25)
13	805-113	100 (25)

Pole number	Item No.	PU (SPU)
14	805-114	100 (25)
15	805-115	80 (20)
16	805-116	80 (20)
17	805-117	80 (20)
18	805-118	60 (15)
19	805-119	60 (15)
20	805-120	60 (15)
21	805-121	60 (15)
22	805-122	60 (15)
23	805-123	60 (15)
24	805-124	40 (10)

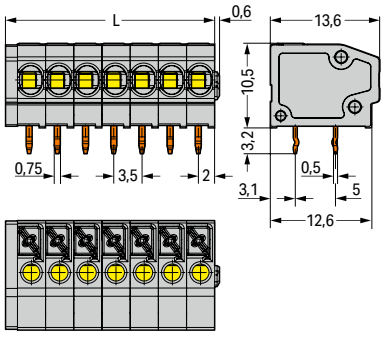

L = (pole no. x pin spacing) + 1.5 mm

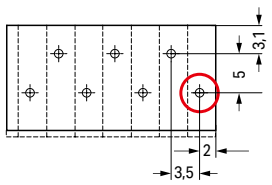

First solder pin, front right (red circle)

PU = packaging unit; SPU = subpackaging unit; Dimensions in mm

Variants:
- Other pole numbers
- Other colors
- Mixed-color PCB connector strips
- Direct marking
- Other versions (or variants) can be requested from WAGO Sales or configured at https://configurator.wago.com/.

PCB terminal block ▸ 804 Series

Push-in CAGE CLAMP® ▸ 2.5 mm² ▸ Actuation type: Push-button ▸ Color: gray

1

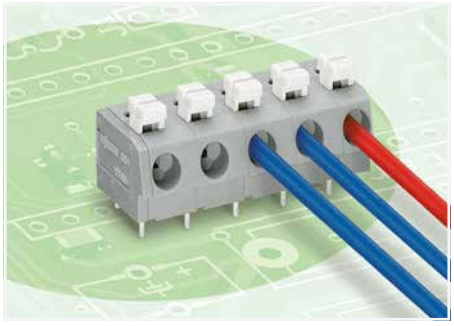

- PCB terminal strips with push-buttons and Push-in CAGE CLAMP® connection
- Push-in termination of solid and ferruled, fine-stranded conductors
- A large conductor entry accommodates conductors with a cross-section up to 12 AWG with an insulation diameter up to 4.2 mm
- Terminal strips with spacers to increase pin spacing
- Versions available with custom internal commoning (factory assembly), e.g., commoning ground conductor

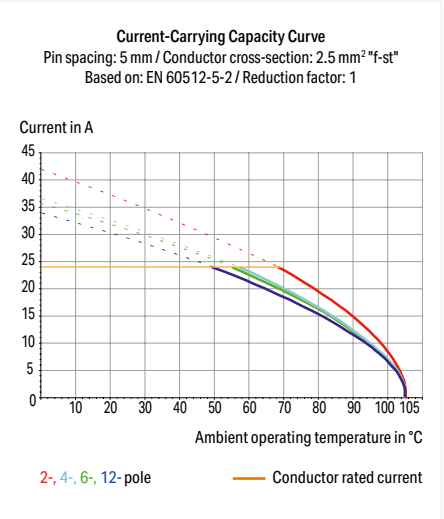

Electrical data						
Pin spacing	**5 mm / 0.197 inches**			**7.5 mm / 0.295 inches**		
Ratings per	**IEC/EN 60664-1**			**IEC/EN 60664-1**		
Overvoltage category	III	III	II	III	III	II
Pollution degree	3	2	2	3	2	2
Nominal voltage	250 V	320 V	630 V	320 V	320 V	630 V
Rated impulse withstand voltage	4 kV	4 kV	4 kV	4 kV	4 kV	4 kV
Rated current	24 A	24 A	24 A	24 A	24 A	24 A
Approvals per	**UL 1059**			**UL 1059**		
Use group	B	C	D	B	C	D
Rated voltage	300 V	-	300 V	300 V	-	300 V
Rated current	10 A	-	10 A	10 A	-	10 A
Approvals per	**CSA**			**CSA**		
Use group	B	C	D	B	C	D
Rated voltage	300 V	-	300 V	300 V	-	300 V
Rated current	10 A	-	10 A	10 A	-	10 A

Connection Data	
Connection technology	Push-in CAGE CLAMP®
Strip length	10 … 11 mm / 0.39 … 0.43 inches
Conductor connection direction to PCB	0 °
Solid conductor	0.25 … 2.5 mm² / 20 … 12 AWG
Fine-stranded conductor	0.25 … 2.5 mm² / 22 … 12 AWG
Fine-stranded conductor; with insulated ferrule	0.25 … 1.5 mm²
Fine-stranded conductor; with uninsulated ferrule	0.25 … 2.5 mm²

Material data	
Material group	I
Insulation material (main housing)	Polyamide (PA66)
Flammability class per UL94	V0
Clamping spring material	Chrome-nickel spring steel (CrNi)
Contact material	Electrolytic copper (E_{Cu})
Contact Plating	Tin

Mechanical data	
Solder pin arrangement	over the entire terminal strip (staggered)
Number of solder pins per potential	2
Solder pin length	3.6 mm
Solder pin dimensions	0.8 x 0.6 mm
Drilled hole diameter	1.1 $^{(+0.1)}$ mm

Environmental requirements	
Limit temperature range	-60 … +105 °C

Ferrule	Page 1081
Marking	Page 1067
Tool	Page 1072
See technical section for further information	
Approvals and corresponding ratings, visit www.wago.com	

PCB terminal block ▸ 804 Series

Push-in CAGE CLAMP® ▸ 2.5 mm² ▸ Actuation type: Push-button ▸ Color: gray

Pin spacing: 5 mm / 0.197 inches



804-108

Pole number	Item No.	PU (SPU)
2	804-102	420 (105)
3	804-103	300 (75)
4	804-104	220 (55)
5	804-105	180 (45)
6	804-106	140 (35)
7	804-107	120 (30)
8	804-108	120 (30)
9	804-109	100 (25)
10	804-110	80 (20)
11	804-111	80 (20)
12	804-112	80 (20)
13	804-113	60 (15)
14	804-114	60 (15)
15	804-115	60 (15)
16	804-116	60 (15)

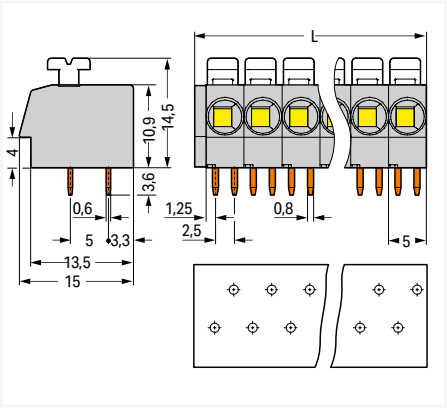

L = (pole no. x pin spacing) + 1.5 mm

Pin spacing: 7.5 mm / 0.295 inches



804-305

Pole number	Item No.	PU (SPU)
2	804-302	340 (85)
3	804-303	220 (55)
4	804-304	160 (40)
5	804-305	120 (30)
6	804-306	100 (25)
7	804-307	80 (20)
8	804-308	80 (20)
9	804-309	60 (15)
10	804-310	60 (15)
11	804-311	60 (15)
12	804-312	40 (10)

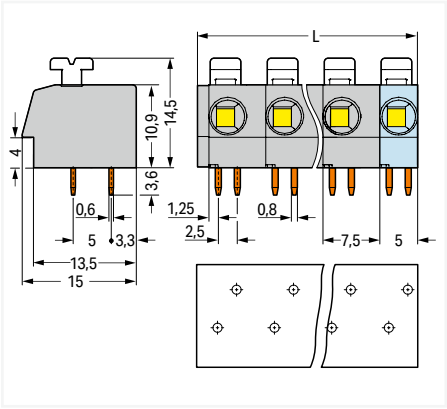

L = (pole no. – 1) x pin spacing + 5 mm + 1.5 mm

PU = packaging unit; SPU = subpackaging unit; Dimensions in mm

Variants:

- Other pole numbers
- Other colors
- Mixed-color PCB connector strips
- 10 mm pin spacing version with spacers
- Direct marking
- Versions for Ex i
- Other versions (or variants) can be requested from WAGO Sales or configured at https://configurator.wago.com/.

PCB terminal block ▸ 2601 Series

Push-in CAGE CLAMP® ▸ Actuation type: Lever ▸ 1.5 mm², Terminal strip ▸ Color: gray

1



- PCB terminal blocks with Push-in CAGE CLAMP® connection and levers
- Push-in termination of solid and ferruled conductors
- Intuitive and tool-free operation
- Several clamping units can be held open simultaneously, simplifying the connection of multi-core cables
- Testing can be performed both parallel and perpendicular to conductor entry

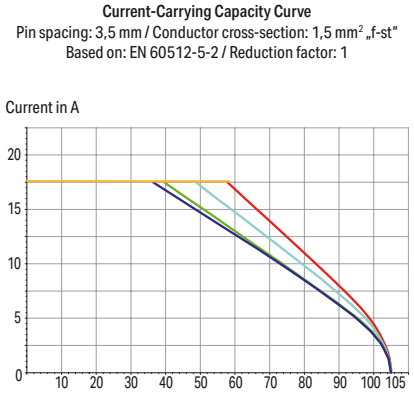

Electrical data									
Pin spacing	**3.5 mm / 0.138 inches**			**7.5 mm / 0.295 inches**			**11.5 mm / 0.453 inches**		
Ratings per	**IEC/EN 60947-7-4**			**IEC/EN 60664-1**			**IEC/EN 60664-1**		
Overvoltage category	III	III	II	III	III	II	III	III	II
Pollution degree	3	2	2	3	2	2	3	2	2
Nominal voltage	200 V	500 V	500 V	500 V	1000 V	1000 V	800 V	1000 V	1000 V
Rated impulse withstand voltage	2.5 kV	2.5 kV	2.5 kV	6 kV	6 kV	6 kV	8 kV	8 kV	8 kV
Rated current	17.5 A	17.5 A	17.5 A	17.5 A	17.5 A	17.5 A	17.5 A	17.5 A	17.5 A
Approvals per	**UL 1059**			**UL 1059**			**UL 1059**		
Use group	B	C	D	B	C	D	B	C	D
Rated voltage	300 V	-	300 V	300 V	150 V	300 V	300 V	300 V	600 V
Rated current	15 A	-	10 A	15 A	15 A	10 A	15 A	15 A	15 A
Approvals per	**CSA**			**CSA**			**CSA**		
Use group	B	C	D	B	C	D	B	C	D
Rated voltage	300 V	-	300 V	300 V	150 V	300 V	300 V	300 V	600 V
Rated current	10 A	-	10 A	15 A	15 A	10 A	15 A	15 A	15 A

Connection Data	
Connection technology	Push-in CAGE CLAMP®
Strip length	8 … 9 mm / 0.31 … 0.35 inches
Fine-stranded conductor	0.14 … 1.5 mm² / 26 … 14 AWG
Fine-stranded conductor; with insulated ferrule	0.25 … 0.75 mm²
Fine-stranded conductor; with uninsulated ferrule	0.25 … 1.5 mm²
Note (conductor cross-section)	For conductors (26 AWG) that are not rigid enough, the clamping unit must be opened using a lever.

Material data	
Material group	I
Insulation material (main housing)	Polyamide (PA66)
Flammability class per UL94	V0
Clamping spring material	Chrome-nickel spring steel (CrNi)
Contact material	Electrolytic copper (E_{Cu})
Contact Plating	Tin

Mechanical data	
Number of solder pins per potential	2
Solder pin length	3.6 mm
Solder pin dimensions	1 x 0.5 mm
Drilled hole diameter	1.2 $^{(+0.1)}$ mm

Environmental requirements	
Limit temperature range	-60 … +105 °C
Processing temperature	-35 … +60 °C
Continuous operating temperature	-60 … +105 °C

See technical section for further information

Approvals and corresponding ratings, visit www.wago.com

PCB terminal block ▸ 2601 Series

Push-in CAGE CLAMP® ▸ Actuation type: Lever ▸ 1.5 mm², Terminal strip ▸ Color: gray

Conductor connection direction to PCB: 0 ° ▸ Pin spacing: 3.5 mm / 0.138 inches



2601-1103

Pole number	Item No.	PU
2	2601-1102	220
3	2601-1103	160
4	2601-1104	120
5	2601-1105	100
6	2601-1106	80
7	2601-1107	70
8	2601-1108	60
9	2601-1109	60
10	2601-1110	50
11	2601-1111	50
12	2601-1112	40

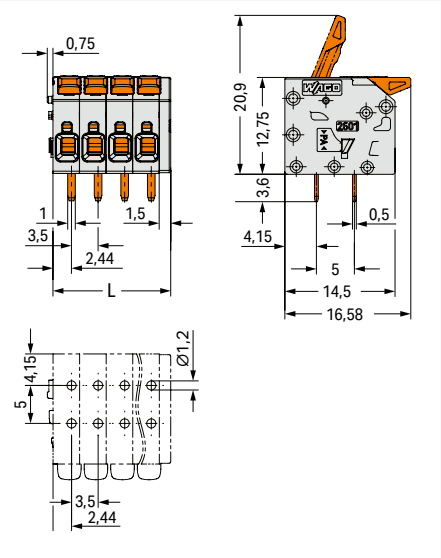

L = (pole no. – 1) x pin spacing + 5 mm

Conductor connection direction to PCB: 0 ° ▸ Pin spacing: 7.5 mm / 0.295 inches



2601-1103

Pole number	Item No.	PU
2	2601-1302	150
3	2601-1303	100
4	2601-1304	70
5	2601-1305	50
6	2601-1306	40
7	2601-1307	40
8	2601-1308	30
9	2601-1309	30
10	2601-1310	20
11	2601-1311	20
12	2601-1312	20

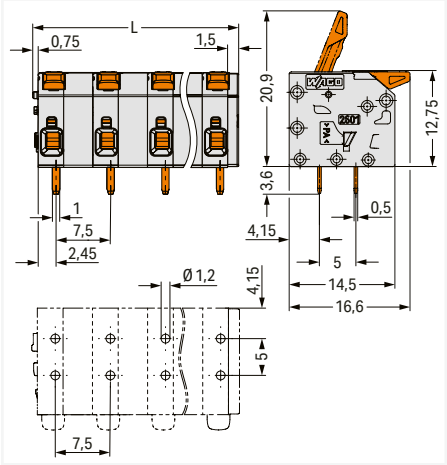

L = (pole no. – 1) x pin spacing + 5 mm

Conductor connection direction to PCB: 0 ° ▸ Pin spacing: 11.5 mm / 0.453 inches



2601-1503

Pole number	Item No.	PU
2	2601-1502	120
3	2601-1503	70
4	2601-1504	50
5	2601-1505	40
6	2601-1506	30
7	2601-1507	20
8	2601-1508	20
9	2601-1509	20
10	2601-1510	10
11	2601-1511	10
12	2601-1512	10

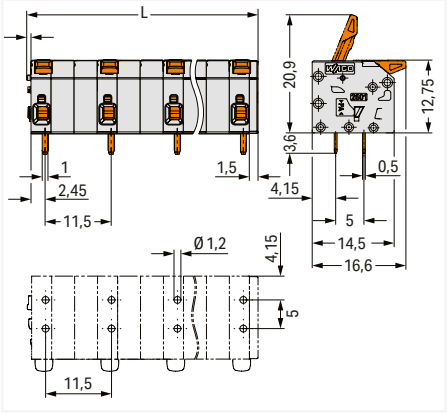

L = (pole no. – 1) x pin spacing + 5 mm

PU = packaging unit; SPU = subpackaging unit; Dimensions in mm

Variants:

- Other pole numbers
- Direct marking
- Other colors
- Other versions (or variants) can be requested from WAGO Sales or configured at https://configurator.wago.com/.

PCB terminal block ▸ 2601 Series

Push-in CAGE CLAMP® ▸ Actuation type: Lever ▸ 1.5 mm², Terminal strip ▸ Color: gray

1

Conductor connection direction to PCB: 90 ° ▸ Pin spacing: 3.5 mm / 0.138 inches



2601-3103

Pole number	Item No.	PU
2	2601-3102	220
3	2601-3103	160
4	2601-3104	120
5	2601-3105	100
6	2601-3106	80
7	2601-3107	70
8	2601-3108	60
9	2601-3109	60
10	2601-3110	50
11	2601-3111	50
12	2601-3112	40

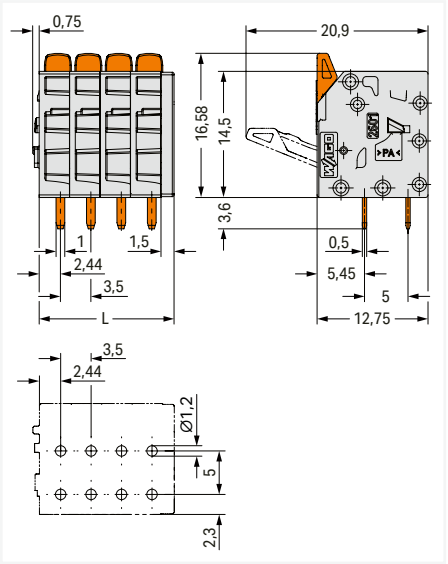

L = (pole no. – 1) x pin spacing + 5 mm

Conductor connection direction to PCB: 90 ° ▸ Pin spacing: 7.5 mm / 0.295 inches



2601-3303

Pole number	Item No.	PU
2	2601-3302	150
3	2601-3303	100
4	2601-3304	70
5	2601-3305	50
6	2601-3306	40
7	2601-3307	40
8	2601-3308	30
9	2601-3309	30
10	2601-3310	20
11	2601-3311	20
12	2601-3312	20

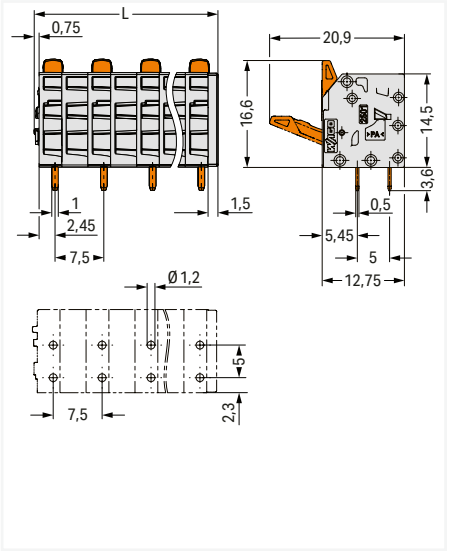

L = (pole no. – 1) x pin spacing + 5 mm

Conductor connection direction to PCB: 90 ° ▸ Pin spacing: 11.5 mm / 0.453 inches



2601-3503

Pole number	Item No.	PU
2	2601-3502	120
3	2601-3503	70
4	2601-3504	50
5	2601-3505	40
6	2601-3506	30
7	2601-3507	20
8	2601-3508	20
9	2601-3509	20
10	2601-3510	10
11	2601-3511	10
12	2601-3512	10

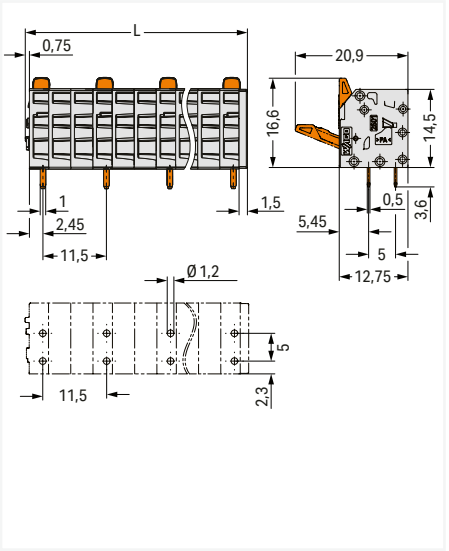

L = (pole no. – 1) x pin spacing + 5 mm

PU = packaging unit; SPU = subpackaging unit; Dimensions in mm

Variants:

- Other pole numbers
- Direct marking
- Other colors
- Other versions (or variants) can be requested from WAGO Sales or configured at https://configurator.wago.com/.

PCB terminal block ▸ 2602 Series

Push-in CAGE CLAMP® ▸ Actuation type: Lever ▸ 2.5 mm², Modular terminal block ▸ Pin spacing: 5 mm / 0.197 inches ▸ Color: gray

1

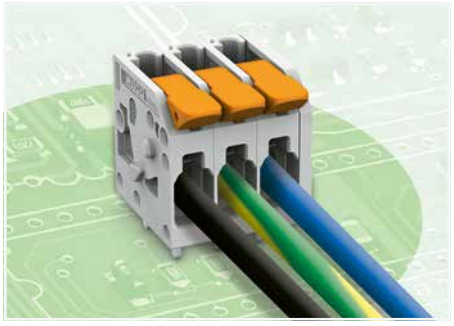

- PCB terminal blocks with Push-in CAGE CLAMP® connection and levers
- Push-in termination of solid conductors and fine-stranded conductors with ferrules
- Intuitive, tool-free operation
- Several clamping units can be held open simultaneously, simplifying the connection of multi-core cables
- Testing can be performed both parallel and perpendicular to conductor entry

Electrical data			
Pin spacing	**5 mm / 0.197 inches**		
Ratings per	**IEC/EN 60664-1**		
Overvoltage category	III	III	II
Pollution degree	3	2	2
Nominal voltage	320 V	320 V	630 V
Rated impulse withstand voltage	4 kV	4 kV	4 kV
Rated current	24 A	24 A	24 A

Connection Data	
Connection technology	Push-in CAGE CLAMP®
Strip length	8 … 9 mm / 0.31 … 0.35 inches
Solid conductor	0.14 … 2.5 mm² / 26 … 14 AWG
Fine-stranded conductor	0.14 … 2.5 mm² / 26 … 14 AWG
Fine-stranded conductor; with insulated ferrule	0.25 … 1 mm²
Fine-stranded conductor; with uninsulated ferrule	0.25 … 1.5 mm²

Material data	
Material group	I
Insulation material (main housing)	Polyamide (PA66)
Flammability class per UL94	V0
Clamping spring material	Chrome-nickel spring steel (CrNi)
Contact material	Electrolytic copper (E_{Cu})
Contact Plating	Tin

Mechanical data	
Number of solder pins per potential	2
Solder pin length	3.6 mm
Solder pin dimensions	0.5 x 1 mm
Drilled hole diameter	1.2 $^{(+0.1)}$ mm

Environmental requirements	
Limit temperature range	-60 … +105 °C
Processing temperature	-35 … +60 °C
Continuous operating temperature	-60 … +105 °C

See technical section for further information

Approvals and corresponding ratings, visit www.wago.com

PCB terminal block ▸ 2602 Series

Push-in CAGE CLAMP® ▸ Actuation type: Lever ▸ 2.5 mm², Modular terminal block ▸ Pin spacing: 5 mm / 0.197 inches ▸ Color: gray

Conductor connection direction to PCB: 0 °



2602-1101

Color	Pole number	Item No.	PU
gray	1	2602-1101	280

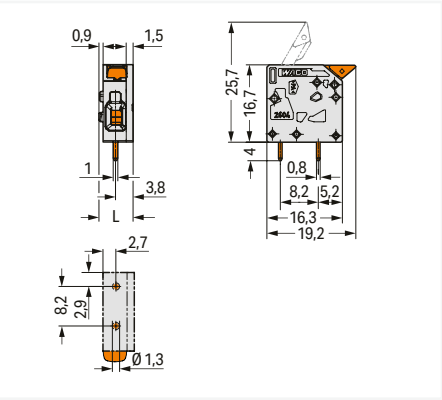

L = 7.4 mm

Conductor connection direction to PCB: 90 °



2602-3101

Color	Pole number	Item No.	PU
gray	1	2602-3101	280

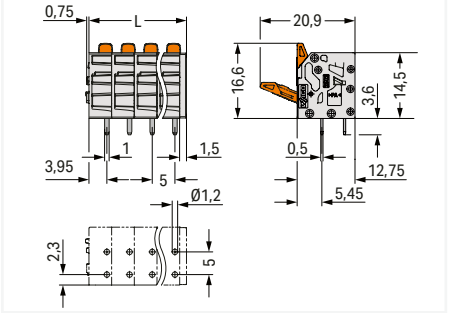

L = pin spacing x (pole no. – 1) x + 6.5 mm

PU = packaging unit; SPU = subpackaging unit; Dimensions in mm

Variants:

- Other pole numbers
- Direct marking
- Other colors
- Other versions (or variants) can be requested from WAGO Sales or configured at https://configurator.wago.com/.

PCB terminal block ▸ 2602 Series

Push-in CAGE CLAMP® ▸ Actuation type: Lever ▸ 2.5 mm², Terminal strip ▸ Pin spacing: 5 mm / 0.197 inches ▸ Color: gray

1



- PCB terminal blocks with Push-in CAGE CLAMP® connection and levers
- Push-in termination of solid conductors and fine-stranded conductors with ferrules
- Intuitive, tool-free operation
- Several clamping units can be held open simultaneously, simplifying the connection of multi-core cables
- Testing can be performed both parallel and perpendicular to conductor entry

Electrical data			
Pin spacing	**5 mm / 0.197 inches**		
Ratings per	**IEC/EN 60664-1**		
Overvoltage category	III	III	II
Pollution degree	3	2	2
Nominal voltage	320 V	320 V	630 V
Rated impulse withstand voltage	4 kV	4 kV	4 kV
Rated current	24 A	24 A	24 A
Connection Data			
Connection technology	Push-in CAGE CLAMP®		
Strip length	8 … 9 mm / 0.31 … 0.35 inches		
Solid conductor	0.14 … 2.5 mm² / 26 … 14 AWG		
Fine-stranded conductor	0.14 … 2.5 mm² / 26 … 14 AWG		
Fine-stranded conductor; with insulated ferrule	0.25 … 1 mm²		
Fine-stranded conductor; with uninsulated ferrule	0.25 … 1.5 mm²		
Material data			
Material group	I		
Insulation material (main housing)	Polyamide (PA66)		
Flammability class per UL94	V0		
Clamping spring material	Chrome-nickel spring steel (CrNi)		
Contact material	Electrolytic copper (E_{Cu})		
Contact Plating	Tin		
Mechanical data			
Solder pin arrangement	within the terminal block (in-line)		
Number of solder pins per potential	2		
Solder pin length	3.6 mm		
Solder pin dimensions	0.5 x 1 mm		
Drilled hole diameter	1.2 $^{(+0.1)}$ mm		
Environmental requirements			
Limit temperature range	-60 … +105 °C		
Processing temperature	-35 … +60 °C		
Continuous operating temperature	-60 … +105 °C		

See technical section for further information

Approvals and corresponding ratings, visit www.wago.com

PCB terminal block ▸ 2602 Series

Push-in CAGE CLAMP® ▸ Actuation type: Lever ▸ 2.5 mm², Terminal strip ▸ Pin spacing: 5 mm / 0.197 inches ▸ Color: gray

Conductor connection direction to PCB: 0 °



2602-1103

Pole number	Item No.	PU
2	**2602-1102**	160
3	**2602-1103**	110
4	**2602-1104**	90
5	**2602-1105**	70
6	**2602-1106**	60
7	**2602-1107**	50
8	**2602-1108**	40
9	**2602-1109**	40
10	**2602-1110**	30
11	**2602-1111**	30
12	**2602-1112**	30

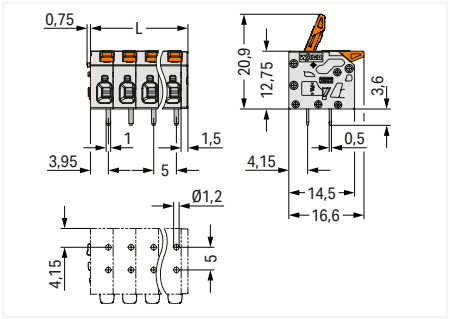

L = pin spacing x (pole no. – 1) x + 6.5 mm

Conductor connection direction to PCB: 90 °



2602-3103

Pole number	Item No.	PU
2	**2602-3102**	160
3	**2602-3103**	110
4	**2602-3104**	90
5	**2602-3105**	70
6	**2602-3106**	60
7	**2602-3107**	50
8	**2602-3108**	40
9	**2602-3109**	40
10	**2602-3110**	30
11	**2602-3111**	30
12	**2602-3112**	30

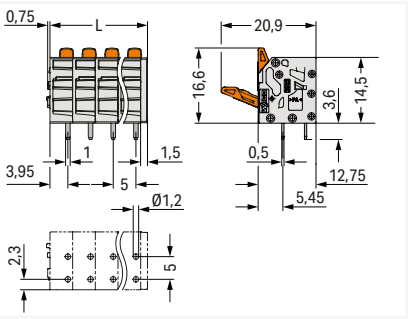

L = pin spacing x (pole no. – 1) x + 6.5 mm

PU = packaging unit; SPU = subpackaging unit; Dimensions in mm

Variants:
- Other pole numbers
- Direct marking
- Other colors
- Other versions (or variants) can be requested from WAGO Sales or configured at https://configurator.wago.com/.

PCB terminal block ▸ 2604 Series

Push-in CAGE CLAMP® ▸ Actuation type: Lever ▸ 4 mm², Modular terminal block ▸ Pin spacing: 5 mm / 0.197 inches ▸ Color: gray

1

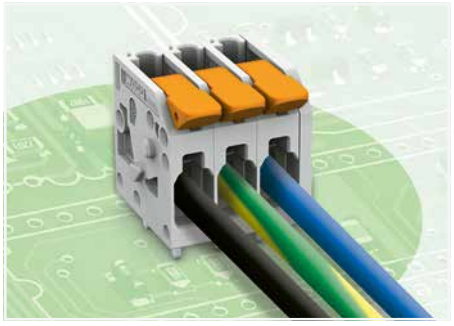

- PCB terminal blocks with Push-in CAGE CLAMP® connection and levers
- Push-in termination of solid and ferruled conductors
- Intuitive and tool-free operation
- Several clamping units can be held open simultaneously, simplifying the connection of multi-core cables
- Testing can be performed both parallel and perpendicular to conductor entry

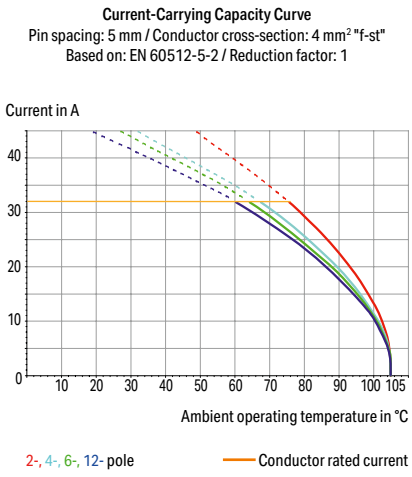

Electrical data			
Pin spacing	**5 mm / 0.197 inches**		
Ratings per	**IEC/EN 60664-1**		
Overvoltage category	III	III	II
Pollution degree	3	2	2
Nominal voltage	320 V	400 V	630 V
Rated impulse withstand voltage	4 kV	4 kV	4 kV
Rated current	32 A	32 A	32 A
Approvals per	**UL 1059**		
Use group	B	C	D
Rated voltage	300 V	-	300 V
Rated current	20 A	-	10 A
Approvals per	**CSA**		
Use group	B	C	D
Rated voltage	300 V	-	300 V
Rated current	20 A	-	5 A

Connection Data	
Connection technology	Push-in CAGE CLAMP®
Strip length	9 … 11 mm / 0.35 … 0.43 inches
Solid conductor	0.2 … 4 mm² / 24 … 12 AWG
Fine-stranded conductor	0.2 … 4 mm² / 24 … 12 AWG
Fine-stranded conductor; with insulated ferrule	0.25 … 2.5 mm²
Fine-stranded conductor; with uninsulated ferrule	0.25 … 2.5 mm²
Fine-stranded conductor; with twin ferrule	0.25 … 1.5 mm²

Material data	
Material group	I
Insulation material (main housing)	Polyamide (PA66)
Flammability class per UL94	V0
Clamping spring material	Chrome-nickel spring steel (CrNi)
Contact material	Electrolytic copper (E_{Cu})
Contact Plating	Tin

Mechanical data	
Solder pin arrangement	over the entire terminal strip (in-line)
Number of solder pins per potential	2
Solder pin length	4 mm
Solder pin dimensions	0.8 x 1 mm
Drilled hole diameter	1.3 $^{(+0.1)}$ mm

Environmental requirements	
Limit temperature range	-60 … +105 °C
Processing temperature	-35 … +60 °C
Continuous operating temperature	-60 … +105 °C

Note:
The inherent stability of a single-pole PCB terminal block is less than that of a multi-pole terminal strip. The customer must therefore ensure that these terminal blocks are protected against excessive mechanical stress (e.g., torsional or bending stress), both when connecting the conductor and during subsequent use, for example by providing additional support, shortly holding the connected conductor and appropriate actuation instructions.

Ferrule Page 1081

See technical section for further information

Approvals and corresponding ratings, visit www.wago.com

PCB terminal block ▸ 2604 Series

Push-in CAGE CLAMP® ▸ Actuation type: Lever ▸ 4 mm², Modular terminal block ▸ Pin spacing: 5 mm / 0.197 inches ▸ Color: gray

Conductor connection direction to PCB: 0 °



2604-1101

Color	Pole number	Item No.	PU
gray	1	2604-1101	280

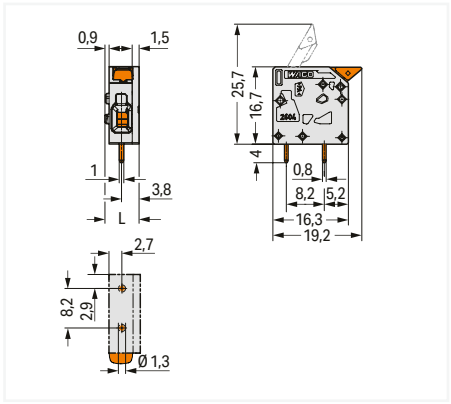

L = 7.4 mm

Conductor connection direction to PCB: 90 °



2604-3101

Color	Pole number	Item No.	PU
gray	1	2604-3101	280

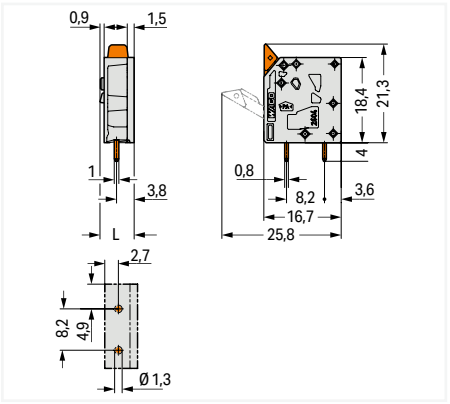

L = 7.4 mm

PU = packaging unit; SPU = subpackaging unit; Dimensions in mm

Variants:
- Other pole numbers
- Direct marking
- Other colors
- Other versions (or variants) can be requested from WAGO Sales or configured at https://configurator.wago.com/.

PCB terminal block ▸ 2604 Series

Push-in CAGE CLAMP® ▸ Actuation type: Lever ▸ 4 mm², Terminal strip ▸ Color: gray

1

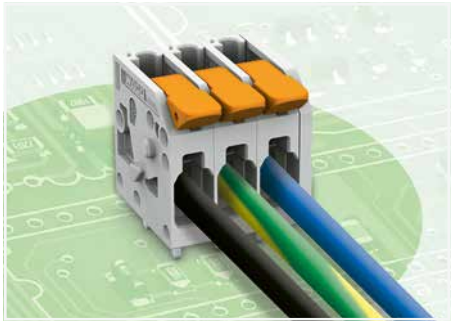

- PCB terminal blocks with Push-in CAGE CLAMP® connection and levers
- Push-in termination of solid and ferruled conductors
- Intuitive and tool-free operation
- Several clamping units can be held open simultaneously, simplifying the connection of multi-core cables
- Testing can be performed both parallel and perpendicular to conductor entry

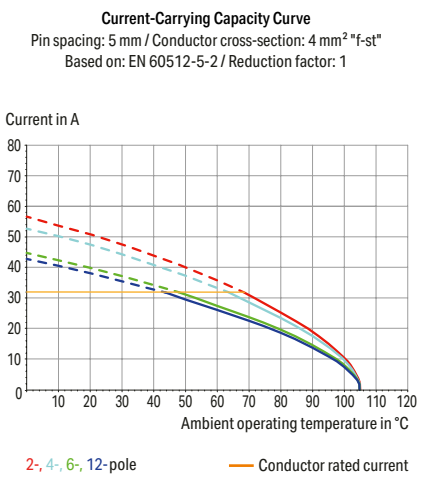

Electrical data									
Pin spacing	**5 mm / 0.197 inches**			**7.5 mm / 0.295 inches**			**11.5 mm / 0.453 inches**		
Ratings per	**IEC/EN 60664-1**			**IEC/EN 60664-1**			**IEC/EN 60664-1**		
Overvoltage category	III	III	II	III	III	II	III	III	II
Pollution degree	3	2	2	3	2	2	3	2	2
Nominal voltage	320 V	400 V	630 V	630 V	1000 V	1000 V	1000 V	1000 V	1000 V
Rated impulse withstand voltage	4 kV	4 kV	4 kV	6 kV	6 kV	6 kV	8 kV	8 kV	8 kV
Rated current	32 A	32 A	32 A	32 A	32 A	32 A	32 A	32 A	32 A
Approvals per	**UL 1059**			**UL 1059**			**UL 1059**		
Use group	B	C	D	B	C	D	B	C	D
Rated voltage	300 V	-	300 V	300 V	300 V	600 V	600 V	600 V	-
Rated current	20 A	-	10 A	20 A	20 A	5 A	20 A	20 A	-
Approvals per	**CSA**			**CSA**			**CSA**		
Use group	B	C	D	B	C	D	B	C	D
Rated voltage	300 V	-	300 V	300 V	300 V	600 V	600 V	600 V	-
Rated current	20 A	-	5 A	20 A	20 A	5 A	20 A	20 A	-

Connection Data	
Connection technology	Push-in CAGE CLAMP®
Strip length	9 … 11 mm / 0.35 … 0.43 inches
Solid conductor	0.2 … 4 mm² / 24 … 12 AWG
Fine-stranded conductor	0.2 … 4 mm² / 24 … 12 AWG
Fine-stranded conductor; with insulated ferrule	0.25 … 2.5 mm²
Fine-stranded conductor; with uninsulated ferrule	0.25 … 2.5 mm²
Fine-stranded conductor; with twin ferrule	0.25 … 1.5 mm²

Material data	
Material group	I
Insulation material (main housing)	Polyamide (PA66)
Flammability class per UL94	V0
Clamping spring material	Chrome-nickel spring steel (CrNi)
Contact material	Electrolytic copper (E_{Cu})
Contact Plating	Tin

Mechanical data	
Solder pin arrangement	over the entire terminal strip (in-line)
Number of solder pins per potential	2
Solder pin length	4 mm
Solder pin dimensions	0.8 x 1 mm
Drilled hole diameter	1.3 $^{(+0.1)}$ mm

Environmental requirements	
Limit temperature range	-60 … +105 °C
Processing temperature	-35 … +60 °C
Continuous operating temperature	-60 … +105 °C

Ferrule Page 1081

See technical section for further information

Approvals and corresponding ratings, visit www.wago.com

PCB terminal block ▸ 2604 Series

Push-in CAGE CLAMP® ▸ Actuation type: Lever ▸ 4 mm², Terminal strip ▸ Color: gray

1

Conductor connection direction to PCB: 0 ° ▸ Pin spacing: 5 mm / 0.197 inches



2604-1103

Pole number	Item No.	PU
2	2604-1102	170
3	2604-1103	130
4	2604-1104	90
5	2604-1105	70
6	2604-1106	60
7	2604-1107	50
8	2604-1108	40
9	2604-1109	40
10	2604-1110	40
11	2604-1111	30
12	2604-1112	30

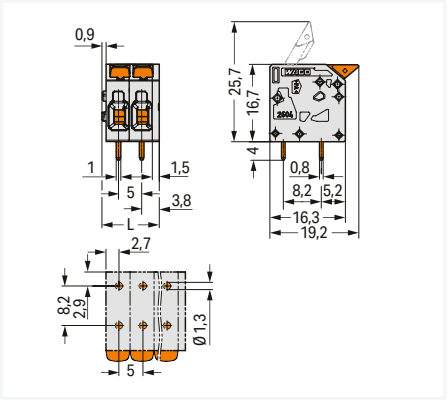

L = (pole no. – 1) x pin spacing + 7.4 mm

Conductor connection direction to PCB: 0 ° ▸ Pin spacing: 7.5 mm / 0.295 inches



2604-1303

Pole number	Item No.	PU
2	2604-1302	140
3	2604-1303	100
4	2604-1304	70
5	2604-1305	50
6	2604-1306	40
7	2604-1307	30
8	2604-1308	30
9	2604-1309	30
10	2604-1310	20
11	2604-1311	20
12	2604-1312	20

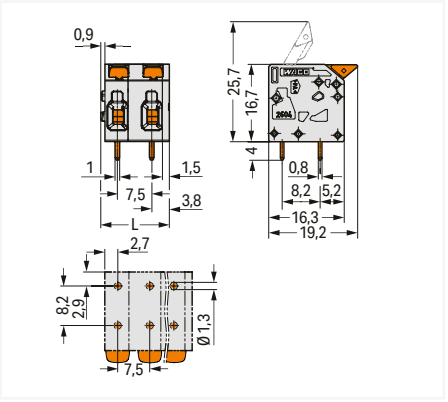

L = (pole no. – 1) x pin spacing + 7.4 mm

Conductor connection direction to PCB: 0 ° ▸ Pin spacing: 11.5 mm / 0.453 inches



2604-1503

Pole number	Item No.	PU
2	2604-1502	110
3	2604-1503	60
4	2604-1504	50
5	2604-1505	40
6	2604-1506	30
7	2604-1507	20
8	2604-1508	20
9	2604-1509	20
10	2604-1510	10
11	2604-1511	10
12	2604-1512	10

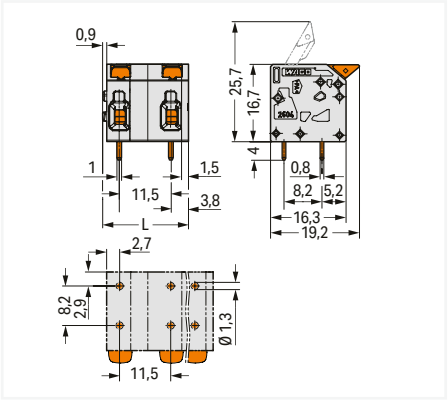

L = (pole no. – 1) x pin spacing + 7.4 mm

PU = packaging unit; SPU = subpackaging unit; Dimensions in mm

Variants:

- Other pole numbers
- Direct marking
- Other colors
- Other versions (or variants) can be requested from WAGO Sales or configured at https://configurator.wago.com/.

PCB terminal block ▸ 2604 Series

Push-in CAGE CLAMP® ▸ Actuation type: Lever ▸ 4 mm², Terminal strip ▸ Color: gray

1

Conductor connection direction to PCB: 90 ° ▸ Pin spacing: 5 mm / 0.197 inches



2604-3103

Pole number	Item No.	PU
2	2604-3102	170
3	2604-3103	120
4	2604-3104	90
5	2604-3105	70
6	2604-3106	60
7	2604-3107	50
8	2604-3108	40
9	2604-3109	40
10	2604-3110	30
11	2604-3111	30
12	2604-3112	30

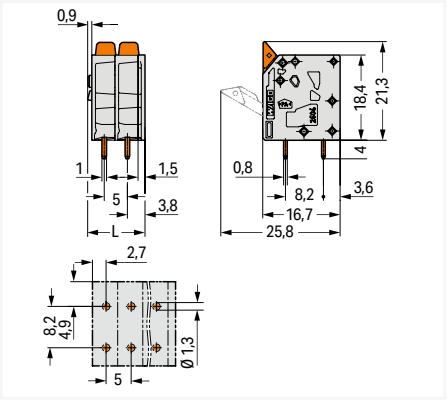

L = (pole no. – 1) x pin spacing + 7.4 mm

Conductor connection direction to PCB: 90 ° ▸ Pin spacing: 7.5 mm / 0.295 inches



2604-3303

Pole number	Item No.	PU
2	2604-3302	150
3	2604-3303	90
4	2604-3304	70
5	2604-3305	50
6	2604-3306	45
7	2604-3307	30
8	2604-3308	30
9	2604-3309	30
10	2604-3310	20
11	2604-3311	20
12	2604-3312	20

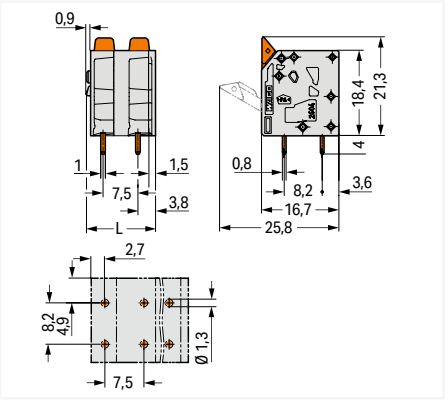

L = (pole no. – 1) x pin spacing + 7.4 mm

Conductor connection direction to PCB: 90 ° ▸ Pin spacing: 11.5 mm / 0.453 inches

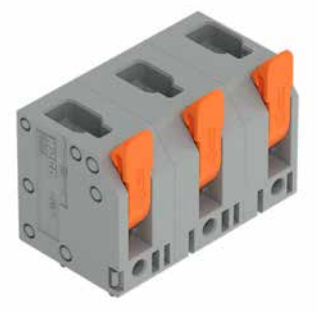

2604-3503

Pole number	Item No.	PU
2	2604-3502	110
3	2604-3503	60
4	2604-3504	40
5	2604-3505	30
6	2604-3506	30
7	2604-3507	20
8	2604-3508	20
9	2604-3509	20
10	2604-3510	10
11	2604-3511	10
12	2604-3512	10

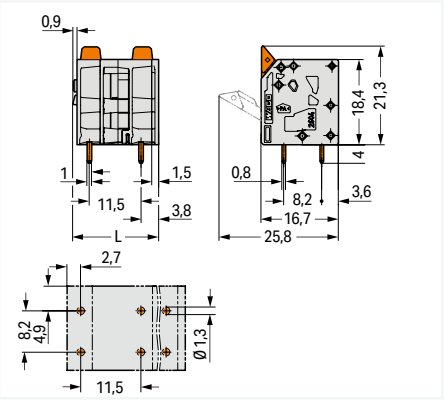

L = (pole no. – 1) x pin spacing + 7.4 mm

PU = packaging unit; SPU = subpackaging unit; Dimensions in mm

Variants:

- Other pole numbers
- Direct marking
- Other colors
- Other versions (or variants) can be requested from WAGO Sales or configured at https://configurator.wago.com/.

PCB terminal block ▸ 2606 Series

Push-in CAGE CLAMP® ▸ Actuation type: Lever ▸ 10 mm², Modular terminal block ▸ Pin spacing: 7.5 mm / 0.295 inches ▸ Color: gray

1



- PCB terminal blocks with Push-in CAGE CLAMP® connection and levers
- Push-in termination of solid and ferruled conductors
- Intuitive and tool-free operation
- Several clamping units can be held open simultaneously, simplifying the connection of multi-core cables
- Testing can be performed both parallel and perpendicular to conductor entry

Current-Carrying Capacity Curve
Pin spacing: 7.5 mm / Conductor cross-section: 6 mm² "f-st"
Based on: EN 60512-5-2 / Reduction factor: 1

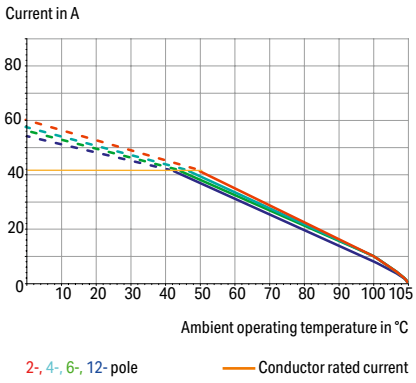

Electrical data			
Pin spacing	**7.5 mm / 0.295 inches**		
Ratings per	**IEC/EN 60664-1**		
Overvoltage category	III	III	II
Pollution degree	3	2	2
Nominal voltage	1000 V	1000 V	1000 V
Rated impulse withstand voltage	8 kV	8 kV	8 kV
Rated current	41 A	41 A	41 A
Approvals per	**UL 1059**		
Use group	B	C	D
Rated voltage	1000 V	1000 V	-
Rated current	42 A	42 A	-
Approvals per	**CSA**		
Use group	B	C	D
Rated voltage	600 V	1000 V	-
Rated current	31 A	31 A	-

Connection Data	
Connection technology	Push-in CAGE CLAMP®
Strip length	11 … 13 mm / 0.43 … 0.51 inches
Solid conductor	0.2 … 10 mm² / 24 … 8 AWG
Fine-stranded conductor	0.2 … 10 mm² / 24 … 8 AWG
Fine-stranded conductor; with insulated ferrule	0.25 … 6 mm²
Fine-stranded conductor; with uninsulated ferrule	0.25 … 6 mm²
Fine-stranded conductor; with twin ferrule	0.25 … 2.5 mm²

Material data	
Material group	I
Insulation material (main housing)	Polyamide (PA66)
Flammability class per UL94	V0
Clamping spring material	Chrome-nickel spring steel (CrNi)
Contact material	Electrolytic copper (E_{Cu})
Contact Plating	Tin

Mechanical data	
Solder pin arrangement	over the entire terminal strip (in-line)
Number of solder pins per potential	2
Solder pin length	4 mm
Solder pin dimensions	1.5 x 1.2 mm
Drilled hole diameter	2 (+0.1) mm

Environmental requirements	
Limit temperature range	-60 … +105 °C
Processing temperature	-35 … +60 °C
Continuous operating temperature	-60 … +105 °C

Note:
The inherent stability of a single-pole PCB terminal block is less than that of a multi-pole terminal strip. The customer must therefore ensure that these terminal blocks are protected against excessive mechanical stress (e.g., torsional or bending stress), both when connecting the conductor and during subsequent use, for example by providing additional support, shortly holding the connected conductor and appropriate actuation instructions.

Ferrule Page 1081

See technical section for further information

Approvals and corresponding ratings, visit www.wago.com

PCB terminal block ▸ 2606 Series

Push-in CAGE CLAMP® ▸ Actuation type: Lever ▸ 10 mm², Modular terminal block ▸ Pin spacing: 7.5 mm / 0.295 inches ▸ Color: gray

Conductor connection direction to PCB: 0 °



2606-1101

Color	Pole number	Item No.	PU
gray	1	2606-1101	200

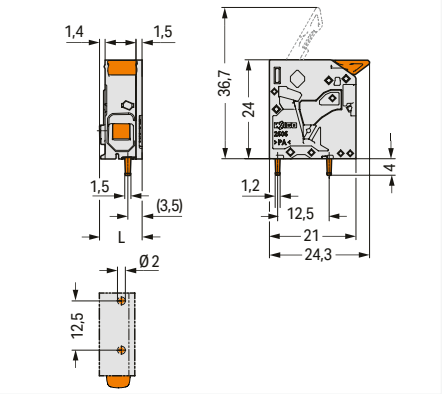

L = 10.35 mm

Conductor connection direction to PCB: 90 °



2606-3101

Color	Pole number	Item No.	PU
gray	1	2606-3101	200

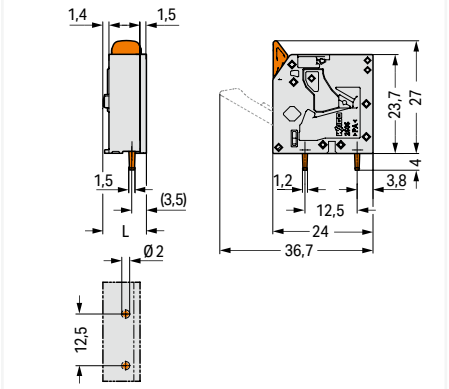

L = 10.35 mm

PU = packaging unit; SPU = subpackaging unit; Dimensions in mm

Variants:
- Other pole numbers
- Direct marking
- Other colors
- Other versions (or variants) can be requested from WAGO Sales or configured at https://configurator.wago.com/.

PCB terminal block ▸ 2606 Series

Push-in CAGE CLAMP® ▸ Actuation type: Lever ▸ 10 mm², Terminal strip ▸ Color: gray

1



- PCB terminal blocks with Push-in CAGE CLAMP® connection and levers
- Push-in termination of solid and ferruled conductors
- Intuitive and tool-free operation
- Several clamping units can be held open simultaneously, simplifying the connection of multi-core cables
- Testing can be performed both parallel and perpendicular to conductor entry

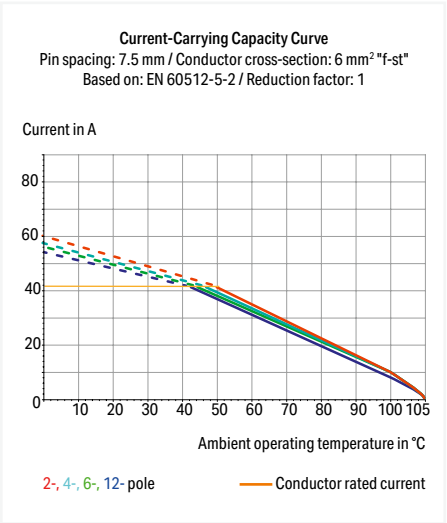

Electrical data						
Pin spacing	**7.5 mm / 0.295 inches**			**12.5 mm / 0.492 inches**		
Ratings per	**IEC/EN 60664-1**			**IEC/EN 60664-1**		
Overvoltage category	III	III	II	III	III	II
Pollution degree	3	2	2	3	2	2
Nominal voltage	800 V	1000 V	1000 V	800 V	1000 V	1000 V
Rated impulse withstand voltage	8 kV	8 kV	8 kV	8 kV	8 kV	8 kV
Rated current	41 A	41 A	41 A	41 A	41 A	41 A
Approvals per	**UL 1059**			**UL 1059**		
Use group	B	C	D	B	C	D
Rated voltage	600 V	600 V	-	600 V	600 V	-
Rated current	31 A	31 A	-	42 A	42 A	-
Approvals per	**CSA**			**CSA**		
Use group	B	C	D	B	C	D
Rated voltage	600 V	600 V	-	600 V	600 V	-
Rated current	31 A	31 A	-	31 A	31 A	-

Connection Data	
Connection technology	Push-in CAGE CLAMP®
Strip length	11 … 13 mm / 0.43 … 0.51 inches
Solid conductor	0.2 … 10 mm² / 24 … 8 AWG
Fine-stranded conductor	0.2 … 10 mm² / 24 … 8 AWG
Fine-stranded conductor; with twin ferrule	0.25 … 2.5 mm²

Material data	
Material group	I
Insulation material (main housing)	Polyamide (PA66)
Flammability class per UL94	V0
Clamping spring material	Chrome-nickel spring steel (CrNi)
Contact material	Electrolytic copper (E_{Cu})
Contact Plating	Tin

Mechanical data	
Solder pin length	4 mm
Solder pin dimensions	1.5 x 1.2 mm
Drilled hole diameter	2 $^{(+0.1)}$ mm

Environmental requirements	
Limit temperature range	-60 … +105 °C
Processing temperature	-35 … +60 °C
Continuous operating temperature	-60 … +105 °C

Ferrule Page 1081

See technical section for further information

Approvals and corresponding ratings, visit www.wago.com

PCB terminal block ▸ 2606 Series

Push-in CAGE CLAMP® ▸ Actuation type: Lever ▸ 10 mm², Terminal strip ▸ Color: gray

Conductor connection direction to PCB: 0 ° ▸ Pin spacing: 7.5 mm / 0.295 inches



2606-1103/020-000

Pole number	Item No.	PU
2	2606-1102/020-000	99
3	2606-1103/020-000	72
4	2606-1104/020-000	54
5	2606-1105/020-000	50
6	2606-1106/020-000	40
7	2606-1107/020-000	27
8	2606-1108/020-000	30
9	2606-1109/020-000	18
10	2606-1110/020-000	18
11	2606-1111/020-000	18
12	2606-1112/020-000	18

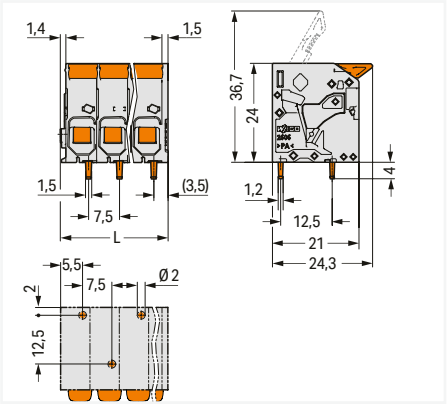

L = (pole no. – 1) x pin spacing + 10.35 mm

Conductor connection direction to PCB: 0 ° ▸ Pin spacing: 12.5 mm / 0.492 inches



2606-1353

Pole number	Item No.	PU
2	2606-1352	81
3	2606-1353	45
4	2606-1354	36
5	2606-1355	40
6	2606-1356	18
7	2606-1357	18
8	2606-1358	18
9	2606-1359	9
10	2606-1360	9
11	2606-1361	9
12	2606-1362	9

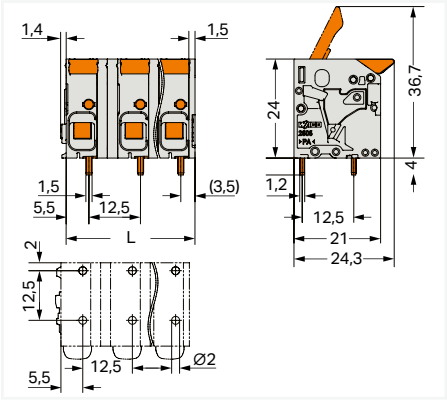

L = (pole no. – 1) x pin spacing + 9 mm

Conductor connection direction to PCB: 90 ° ▸ Pin spacing: 7.5 mm / 0.295 inches



2606-3103/020-000

Pole number	Item No.	PU
2	2606-3102/020-000	88
3	2606-3103/020-000	80
4	2606-3104/020-000	48
5	2606-3105/020-000	50
6	2606-3106/020-000	40
7	2606-3107/020-000	35
8	2606-3108/020-000	24
9	2606-3109/020-000	25
10	2606-3110/020-000	16
11	2606-3111/020-000	16
12	2606-3112/020-000	25

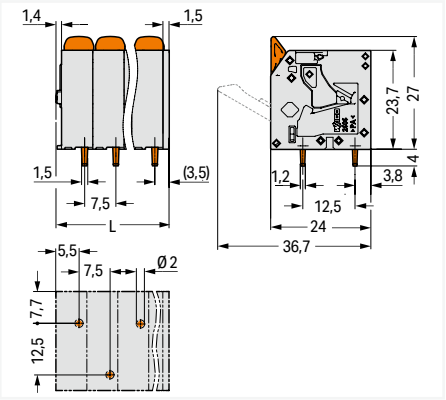

L = (pole no. – 1) x pin spacing + 10.35 mm

PU = packaging unit; SPU = subpackaging unit; Dimensions in mm

Variants:

- Other pole numbers
- Direct marking
- Other colors
- Other versions (or variants) can be requested from WAGO Sales or configured at https://configurator.wago.com/.

PCB terminal block ▸ 2606 Series

Push-in CAGE CLAMP® ▸ Actuation type: Lever ▸ 10 mm², Terminal strip ▸ Color: gray

Conductor connection direction to PCB: 90 ° ▸ Pin spacing: 12.5 mm / 0.492 inches

1



2606-3353

Pole number	Item No.	PU
2	2606-3352	80
3	2606-3353	40
4	2606-3354	32
5	2606-3355	40
6	2606-3356	16
7	2606-3357	16
8	2606-3358	22
9	2606-3359	8
10	2606-3360	8
11	2606-3361	8
12	2606-3362	8

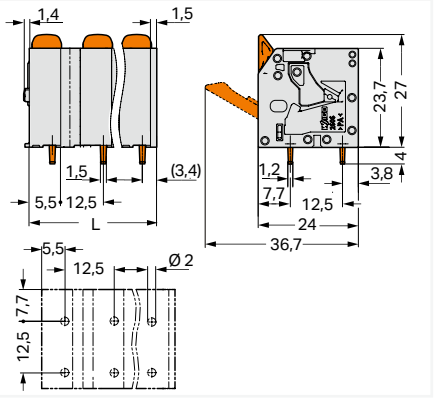

L = (pole no. – 1) x pin spacing + 9 mm

PU = packaging unit; SPU = subpackaging unit; Dimensions in mm

Variants:

- Other pole numbers
- Direct marking
- Other colors
- Other versions (or variants) can be requested from WAGO Sales or configured at https://configurator.wago.com/.

PCB terminal block ▸ 2616 Series

Push-in CAGE CLAMP® ▸ Actuation type: Lever ▸ 25 mm², Modular terminal block ▸ Pin spacing: 10 mm / 0.394 inches ▸ Color: gray

1

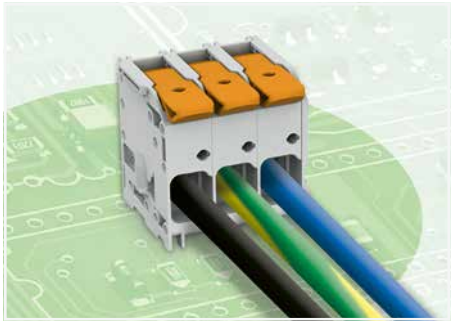

- PCB terminal blocks with Push-in CAGE CLAMP® connection and levers
- Push-in termination of solid and ferruled conductors
- Intuitive and tool-free operation
- Several clamping units can be held open simultaneously, simplifying the connection of multi-core cables
- Testing can be performed both parallel and perpendicular to conductor entry

Current-Carrying Capacity Curve
Pin spacing: 10 mm / Conductor cross-section: 16 mm² "f-st"
Based on: EN 60512-5-2 / Reduction factor: 1

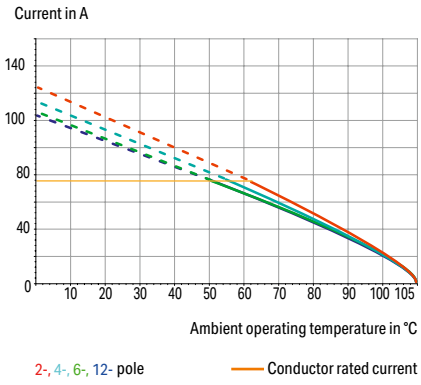

Electrical data			
Pin spacing	**10 mm / 0.394 inches**		
Ratings per	**IEC/EN 60664-1**		
Overvoltage category	III	III	II
Pollution degree	3	2	2
Nominal voltage	1000 V	1000 V	1000 V
Rated impulse withstand voltage	8 kV	8 kV	8 kV
Rated current	76 A	76 A	76 A
Approvals per	**UL 1059**		
Use group	B	C	D
Rated voltage	600 V	600 V	-
Rated current	78 A	78 A	-
Approvals per	**CSA**		
Use group	B	C	D
Rated voltage	600 V	1000 V	-
Rated current	72 A	72 A	-

Connection Data	
Connection technology	Push-in CAGE CLAMP®
Strip length	18 … 20 mm / 0.71 … 0.79 inches
Solid conductor	0.75 … 16 mm² / 18 … 4 AWG
Fine-stranded conductor	0.75 … 25 mm² / 18 … 4 AWG
Fine-stranded conductor; with insulated ferrule	0.75 … 16 mm²
Fine-stranded conductor; with uninsulated ferrule	0.75 … 16 mm²
Fine-stranded conductor; with twin ferrule	0.75 … 6 mm²

Material data	
Material group	I
Insulation material (main housing)	Polyamide (PA66)
Flammability class per UL94	V0
Clamping spring material	Chrome-nickel spring steel (CrNi)
Contact Plating	Tin

Mechanical data	
Solder pin length	4 mm
Solder pin dimensions	1.2 x 1.2 mm
Drilled hole diameter	1.7 (+0.1) mm

Environmental requirements	
Limit temperature range	-60 … +105 °C
Processing temperature	-35 … +60 °C

Note:
The inherent stability of a single-pole PCB terminal block is less than that of a multi-pole terminal strip. The customer must therefore ensure that these terminal blocks are protected against excessive mechanical stress (e.g., torsional or bending stress), both when connecting the conductor and during subsequent use, for example by providing additional support, shortly holding the connected conductor and appropriate actuation instructions.

Ferrule Page 1081

See technical section for further information

Approvals and corresponding ratings, visit www.wago.com

PCB terminal block ▸ 2616 Series

Push-in CAGE CLAMP® ▸ Actuation type: Lever ▸ 25 mm², Modular terminal block ▸ Pin spacing: 10 mm / 0.394 inches ▸ Color: gray

1

Conductor connection direction to PCB: 0 °



2616-1101

Color	Pole number	Item No.	PU
gray	1	2616-1101	100

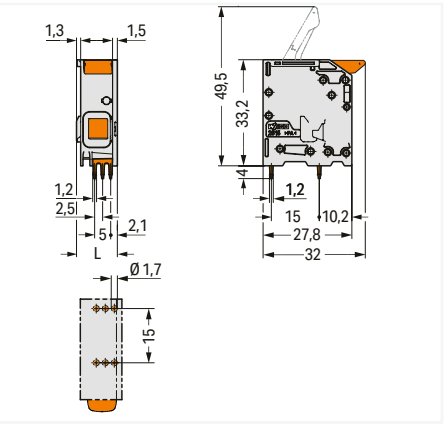

L = 12.8 mm

Conductor connection direction to PCB: 30 °



2616-2101

Color	Pole number	Item No.	PU
gray	1	2616-2101	112

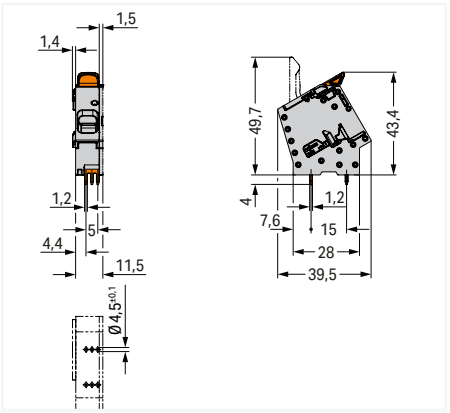

Conductor connection direction to PCB: 90 °



2616-3101

Color	Pole number	Item No.	PU
gray	1	2616-3101	96

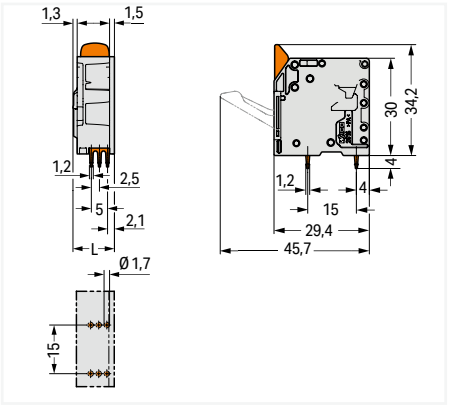

L = 12.8 mm

PU = packaging unit; SPU = subpackaging unit; Dimensions in mm

Variants:
- Other pole numbers
- Direct marking
- Other colors
- Other versions (or variants) can be requested from WAGO Sales or configured at https://configurator.wago.com/.

PCB terminal block ▸ 2616 Series

Push-in CAGE CLAMP® ▸ Actuation type: Lever ▸ 25 mm², Terminal strip ▸ Color: gray

1

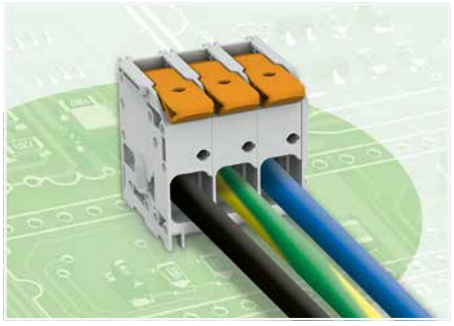

- PCB terminal blocks with Push-in CAGE CLAMP® connection and levers
- Push-in termination of solid and ferruled conductors
- Intuitive and tool-free operation
- Several clamping units can be held open simultaneously, simplifying the connection of multi-core cables
- Testing can be performed both parallel and perpendicular to conductor entry

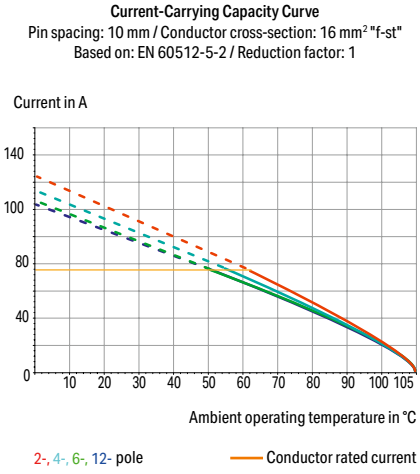

Electrical data									
Pin spacing	**10 mm / 0.394 inches**			**15 mm / 0.591 inches**			**15 mm / 0.591 inches**		
Ratings per	**IEC/EN 60664-1**			**IEC/EN 60664-1**			**IEC/EN 60664-1**		
Overvoltage category	III	III	II	III	III	II	III	III	II
Pollution degree	3	2	2	3	2	2	3	2	2
Nominal voltage	1000 V	1000 V	1000 V	800 V	1000 V	1000 V	800 V	1000 V	1000 V
Rated impulse withstand voltage	8 kV	8 kV	8 kV	8 kV	8 kV	8 kV	8 kV	8 kV	8 kV
Rated current	76 A	76 A	76 A	76 A	76 A	76 A	76 A	76 A	76 A
Approvals per	**UL 1059**			**UL 1059**			**UL 1059**		
Use group	B	C	D	B	C	D	B	C	D
Rated voltage	600 V	600 V	-	600 V	600 V	-	600 V	600 V	-
Rated current	66 A	66 A	-	78 A	78 A	-	78 A	78 A	-
Approvals per	**CSA**			**CSA**			**CSA**		
Use group	B	C	D	B	C	D	B	C	D
Rated voltage	600 V	600 V	-	600 V	600 V	-	600 V	600 V	-
Rated current	66 A	66 A	-	72 A	72 A	-	72 A	78 A	-

Connection Data	
Connection technology	Push-in CAGE CLAMP®
Strip length	18 … 20 mm / 0.71 … 0.79 inches
Solid conductor	0.75 … 16 mm² / 18 … 4 AWG
Fine-stranded conductor	0.75 … 25 mm² / 18 … 4 AWG
Fine-stranded conductor; with insulated ferrule	0.75 … 16 mm²
Fine-stranded conductor; with uninsulated ferrule	0.75 … 16 mm²
Fine-stranded conductor; with twin ferrule	0.75 … 6 mm²

Material data	
Material group	I
Insulation material (main housing)	Polyamide (PA66)
Flammability class per UL94	V0
Clamping spring material	Chrome-nickel spring steel (CrNi)
Contact Plating	Tin

Mechanical data	
Solder pin length	4 mm
Solder pin dimensions	1.2 x 1.2 mm
Drilled hole diameter	1.7 (+0.1) mm

Environmental requirements	
Limit temperature range	-60 … +105 °C
Processing temperature	-35 … +60 °C

Ferrule Page 1081

See technical section for further information

Approvals and corresponding ratings, visit www.wago.com

PCB terminal block ▸ 2616 Series

Push-in CAGE CLAMP® ▸ Actuation type: Lever ▸ 25 mm², Terminal strip ▸ Color: gray

Conductor connection direction to PCB: 0 ° ▸ Pin spacing: 10 mm / 0.394 inches



2616-1103/020-000

Pole number	Item No.	PU
2	2616-1102/020-000	54
3	2616-1103/020-000	40
4	2616-1104/020-000	25
5	2616-1105/020-000	18
6	2616-1106/020-000	20
7	2616-1107/020-000	12
8	2616-1108/020-000	12
9	2616-1109/020-000	12
10	2616-1110/020-000	12
11	2616-1111/020-000	6
12	2616-1112/020-000	6

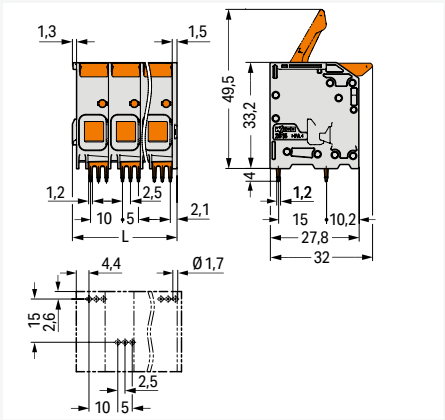

L = (pole no. – 1) x pin spacing + 12.8 mm

Conductor connection direction to PCB: 0 ° ▸ Pin spacing: 15 mm / 0.591 inches



2616-1353

Pole number	Item No.	PU
2	2616-1352	42
3	2616-1353	28
4	2616-1354	18
5	2616-1355	12
6	2616-1356	12
7	2616-1357	12
8	2616-1358	6

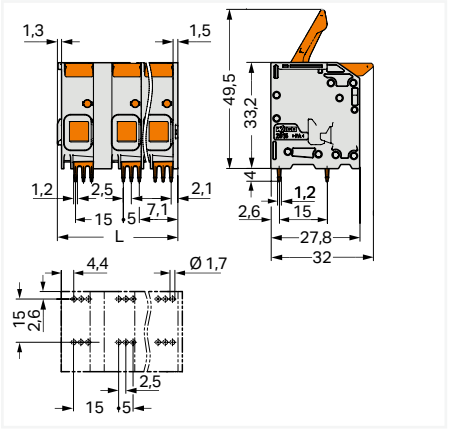

L = (pole no. – 1) x pin spacing + 11.5 mm

Conductor connection direction to PCB: 30 ° ▸ Pin spacing: 10 mm / 0.394 inches



2616-2103/020-000

Pole number	Item No.	PU
2	2616-2102/020-000	63
3	2616-2103/020-000	42
4	2616-2104/020-000	28
5	2616-2105/020-000	21
6	2616-2106/020-000	21
7	2616-2107/020-000	14
8	2616-2108/020-000	14
9	2616-2109/020-000	14
10	2616-2110/020-000	7
11	2616-2111/020-000	7
12	2616-2112/020-000	7

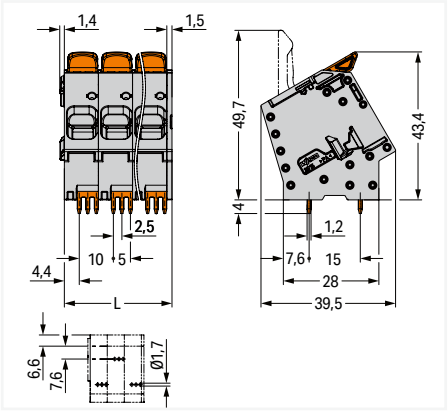

L = pin spacing x (pole no. – 1) + 11.5 mm

PU = packaging unit; SPU = subpackaging unit; Dimensions in mm

Variants:

- Other pole numbers
- Direct marking
- Other colors
- Other versions (or variants) can be requested from WAGO Sales or configured at https://configurator.wago.com/.

PCB terminal block ▸ 2616 Series

Push-in CAGE CLAMP® ▸ Actuation type: Lever ▸ 25 mm², Terminal strip ▸ Color: gray

1

Conductor connection direction to PCB: 90 ° ▸ Pin spacing: 10 mm / 0.394 inches



2616-3103/020-000

Pole number	Item No.	PU
2	2616-3102/020-000	50
3	2616-3103/020-000	40
4	2616-3104/020-000	25
5	2616-3105/020-000	18
6	2616-3106/020-000	18
7	2616-3107/020-000	12
9	2616-3109/020-000	12
10	2616-3110/020-000	12
11	2616-3111/020-000	6
12	2616-3112/020-000	6

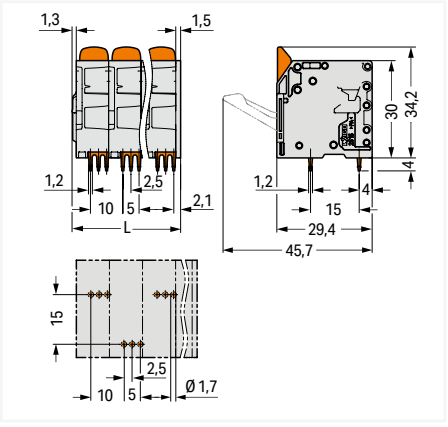

L = (pole no. – 1) x pin spacing + 11.5 mm

Conductor connection direction to PCB: 90 ° ▸ Pin spacing: 15 mm / 0.591 inches

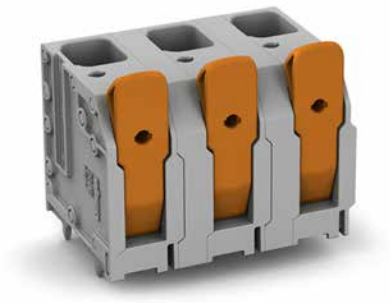

2616-3353

Pole number	Item No.	PU
2	2616-3352	42
3	2616-3353	24
4	2616-3354	18
5	2616-3355	12
6	2616-3356	12
7	2616-3357	12
8	2616-3358	6

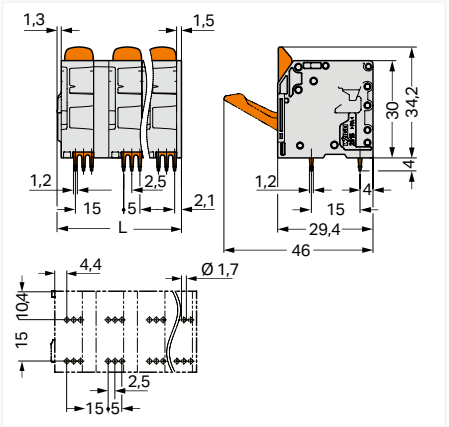

L = (pole no. - 1) x pin spacing + 17.8 mm

PU = packaging unit; SPU = subpackaging unit; Dimensions in mm

Variants:

- Other pole numbers
- Direct marking
- Other colors
- Other versions (or variants) can be requested from WAGO Sales or configured at https://configurator.wago.com/.

Stackable PCB terminal block ▸ 235 Series

PUSH WIRE® ▸ Actuation type: Operating tool ▸ 2.5 mm²

1

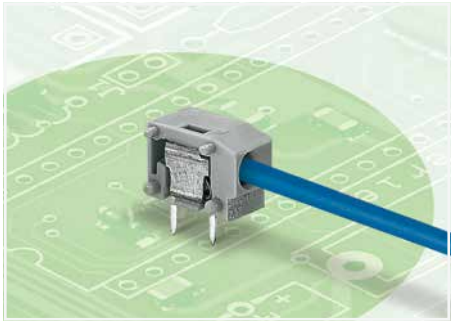

- Low-profile modular PCB terminal blocks with PUSH WIRE® connection for custom terminal strip assemblies
- Push-in termination of solid conductors
- Double solder pins for high mechanical stability
- Conductor removal via screwdriver (2.5 mm blade width)
- Set to metric or inch pin spacing by compressing PCB terminal strips or pulling them apart
- Also available with a test slot

Current-Carrying Capacity Curve
Pin spacing: 5 mm / Conductor cross-section: 2.5 mm² "e"
Based on: EN 60512-5-2 / Reduction factor: 1

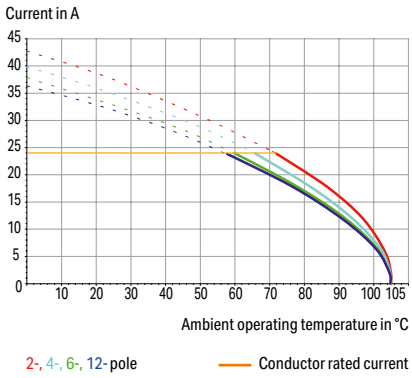

Electrical data									
Pin spacing	**5/5.08 mm / 0.197/0.2 inches**			**7.5/7.62 mm / 0.295/0.3 inches**			**10/10.16 mm / 0.394/0.4 inches**		
Ratings per	**IEC/EN 60664-1**			**IEC/EN 60664-1**			**IEC/EN 60664-1**		
Overvoltage category	III	III	II	III	III	II	III	III	II
Pollution degree	3	2	2	3	2	2	3	2	2
Nominal voltage	250 V	320 V	630 V	400 V	630 V	1000 V	630 V	1000 V	1000 V
Rated impulse withstand voltage	4 kV	4 kV	4 kV	6 kV	6 kV	6 kV	8 kV	8 kV	8 kV
Rated current	24 A	24 A	24 A	24 A	24 A	24 A	24 A	24 A	24 A
Approvals per	**UL 1059**			**UL 1059**			**UL 1059**		
Use group	B	C	D	B	C	D	B	C	D
Rated voltage	300 V	-	300 V	300 V	-	300 V	300 V	-	300 V
Rated current	10 A	-	10 A	10 A	-	10 A	10 A	-	10 A

Connection Data	
Connection technology	PUSH WIRE®
Strip length	9 … 10 mm / 0.35 … 0.39 inches
Conductor connection direction to PCB	0 °
Solid conductor	0.5 … 2.5 mm² / 20 … 14 AWG
Fine-stranded conductor; with insulated ferrule	0.25 … 1.5 mm²
Fine-stranded conductor; with uninsulated ferrule	0.25 … 1.5 mm²

Material data	
Material group	I
Insulation material (main housing)	Polyamide (PA66)
Flammability class per UL94	V0
Clamping spring material	Chrome-nickel spring steel (CrNi)
Contact material	Electrolytic copper (E_{Cu})
Contact Plating	Tin

Mechanical data	
Solder pin arrangement	within the terminal block (in-line)
Number of solder pins per potential	2
Solder pin length	3.6 mm
Solder pin dimensions	0.8 x 0.4 mm
Drilled hole diameter	1 $^{(+0.1)}$ mm

Environmental requirements	
Limit temperature range	-60 … +105 °C

Ferrule	Page 1081
Marking	Page 1067
Tool	Page 1072

See technical section for further information

Approvals and corresponding ratings, visit www.wago.com

Stackable PCB terminal block ▸ 235 Series

PUSH WIRE® ▸ Actuation type: Operating tool ▸ 2.5 mm²

Pin spacing: 5/5.08 mm / 0.197/0.2 inches



235-401

Color	Item No.	PU (SPU)
gray	235-401	800 (100)
blue	235-744	800 (100)
orange	235-746	800 (100)
light gray	235-743	800 (100)
light green	235-747	800 (100)
red	235-740	800 (100)
dark gray	235-742	800 (100)

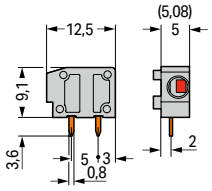

Pin spacing: 7.5/7.62 mm / 0.295/0.3 inches



235-501

Color	Item No.	PU (SPU)
gray	235-501	600 (100)
blue	235-754	600 (100)
orange	235-756	600 (100)
light gray	235-753	600 (100)
light green	235-757	600 (100)
dark gray	235-752	600 (100)

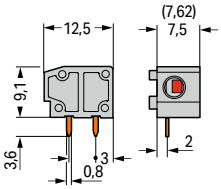

Pin spacing: 10/10.16 mm / 0.394/0.4 inches



235-801

Color	Item No.	PU (SPU)
gray	235-801	400 (100)
orange	235-766	400 (100)
dark gray	235-762	400 (100)

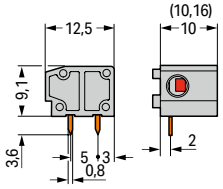

Accessories; for all products on this page



End plate; Width: 1 mm; snap-on type

Color	Item No.	PU (SPU)
gray	235-100	2000 (100)
blue	235-400	2000 (100)
orange	235-600	2000 (100)
white	235-850	2000 (100)
black	235-500	2000 (100)
yellow	235-550	2000 (100)
light gray	235-300	2000 (100)
light green	235-700	2000 (100)
violet	235-650	2000 (100)
red	235-800	2000 (100)
dark gray	235-200	2000 (100)



Intermediate plate; extends pin spacing; Width: 5 mm / 0.197 inches

Color	Item No.	PU (SPU)
gray	235-701	1000 (100)

PU = packaging unit; SPU = subpackaging unit; Dimensions in mm

Variants:

- Other colors
- Other versions (or variants) can be requested from WAGO Sales or configured at https://configurator.wago.com/.

PCB terminal block ▸ 235 Series

PUSH WIRE® ▸ Actuation type: Operating tool ▸ 2.5 mm² ▸ Pin spacing: 5/5.08 mm / 0.197/0.2 inches ▸ Color: gray

1

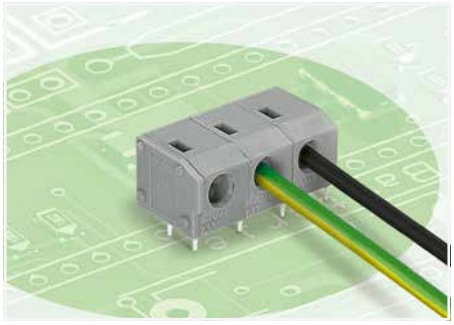

- Low-profile PCB terminal strips with PUSH WIRE® connection for custom terminal strip assemblies
- Push-in termination for solid conductors
- Double solder pins for high mechanical stability
- Conductor removal via screwdriver (2.5mm x 0.4mm)
- Set to metric or inch pin spacing by compressing terminal strips or pulling them apart

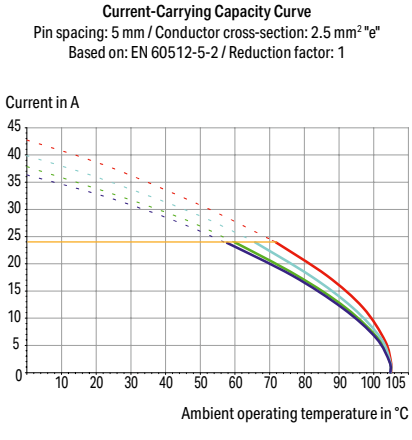

Electrical data			
Pin spacing	**5/5.08 mm / 0.197/0.2 inches**		
Ratings per	**IEC/EN 60664-1**		
Overvoltage category	III	III	II
Pollution degree	3	2	2
Nominal voltage	250 V	320 V	630 V
Rated impulse withstand voltage	4 kV	4 kV	4 kV
Rated current	24 A	24 A	24 A
Approvals per	**UL 1059**		
Use group	B	C	D
Rated voltage	300 V	-	300 V
Rated current	10 A	-	10 A

Connection Data	
Connection technology	PUSH WIRE®
Strip length	9 … 10 mm / 0.35 … 0.39 inches
Conductor connection direction to PCB	0 °
Solid conductor	0.5 … 2.5 mm² / 20 … 14 AWG
Fine-stranded conductor; with insulated ferrule	0.25 … 1.5 mm²
Fine-stranded conductor; with uninsulated ferrule	0.25 … 1.5 mm²

Material data	
Material group	I
Insulation material (main housing)	Polyamide (PA66)
Flammability class per UL94	V0
Clamping spring material	Chrome-nickel spring steel (CrNi)
Contact material	Electrolytic copper (E_{Cu})
Contact Plating	Tin

Mechanical data	
Solder pin arrangement	over the entire terminal strip (in-line)
Number of solder pins per potential	2
Solder pin length	3.6 mm
Solder pin dimensions	0.8 x 0.4 mm
Drilled hole diameter	1 $^{(+0.1)}$ mm

Environmental requirements	
Limit temperature range	-60 … +105 °C

Marking Page 1067
Tool Page 1072
See technical section for further information
Approvals and corresponding ratings, visit www.wago.com

PCB terminal block ▸ 235 Series

PUSH WIRE® ▸ Actuation type: Operating tool ▸ 2.5 mm² ▸ Pin spacing: 5/5.08 mm / 0.197/0.2 inches ▸ Color: gray

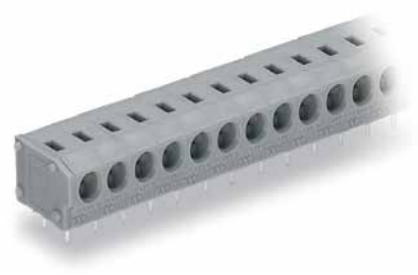

235-412

Pole number	Item No.	PU (SPU)
2	**235-402**	420 (105)
3	**235-403**	280 (70)
4	**235-404**	220 (55)
5	**235-405**	180 (45)
6	**235-406**	140 (35)
7	**235-407**	120 (30)
8	**235-408**	100 (25)
9	**235-409**	100 (25)
10	**235-410**	80 (20)
12	**235-412**	60 (15)

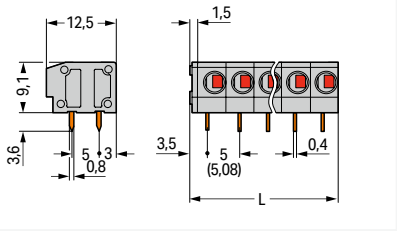

L = (pole no. x pin spacing) + 1.5 mm

PU = packaging unit; SPU = subpackaging unit; Dimensions in mm

Variants:

- Other pole numbers
- Other colors
- Terminal strips with 7.5/7.62 mm and 10/10.16 mm pin spacing
- Mixed-color PCB connector strips
- Direct marking
- Other versions (or variants) can be requested from WAGO Sales or configured at https://configurator.wago.com/.

Stackable PCB terminal block ▸ 235 Series

PUSH WIRE® ▸ Actuation type: Operating tool ▸ 1.5 mm² ▸ Pin spacing: 3.81 mm / 0.15 inches ▸ Color: orange

1

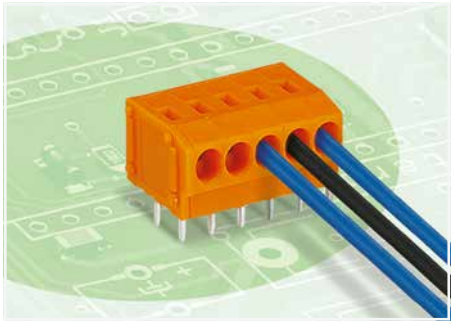

- Low-profile PCB terminal blocks with PUSH WIRE® connection and screwdriver actuation
- Push-in termination of solid conductors
- Double solder pins for high mechanical stability
- Conductor removal via (2.5 x 0.4) mm screwdriver

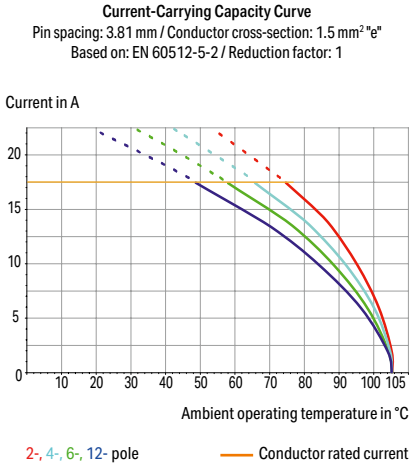

Electrical data			
Pin spacing	**3.81 mm / 0.15 inches**		
Ratings per	**IEC/EN 60664-1**		
Overvoltage category	III	III	II
Pollution degree	3	2	2
Nominal voltage	200 V	320 V	500 V
Rated impulse withstand voltage	4 kV	4 kV	4 kV
Rated current	17.5 A	17.5 A	17.5 A
Approvals per	**UL 1059**		
Use group	B	C	D
Rated voltage	300 V	-	300 V
Rated current	10 A	-	10 A

Connection Data	
Connection technology	PUSH WIRE®
Strip length	9 … 10 mm / 0.35 … 0.39 inches
Conductor connection direction to PCB	0 °
Solid conductor	0.5 … 1.5 mm² / 20 … 16 AWG
Fine-stranded conductor; with insulated ferrule	0.25 … 0.75 mm²
Fine-stranded conductor; with uninsulated ferrule	0.25 … 0.75 mm²

Material data	
Material group	I
Insulation material (main housing)	Polyamide (PA66)
Flammability class per UL94	V0
Clamping spring material	Chrome-nickel spring steel (CrNi)
Contact material	Electrolytic copper (E_{Cu})
Contact Plating	Tin

Mechanical data	
Solder pin arrangement	within the terminal block (in-line)
Number of solder pins per potential	2
Solder pin length	3.6 mm
Solder pin dimensions	0.8 x 0.4 mm
Drilled hole diameter	1 $^{(+0.1)}$ mm

Environmental requirements	
Limit temperature range	-60 … +105 °C

Marking	Page 1066
Tool	Page 1072
See technical section for further information	
Approvals and corresponding ratings, visit www.wago.com	

Stackable PCB terminal block ▸ 235 Series

PUSH WIRE® ▸ Actuation type: Operating tool ▸ 1.5 mm² ▸ Pin spacing: 3.81 mm / 0.15 inches ▸ Color: orange



235-101/330-000

Color	Pole number	Item No.	PU (SPU)
orange	1	235-101/330-000	800 (100)

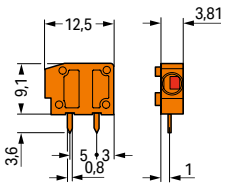

Accessories; for all products on this page



End plate; Width: 1 mm; snap-on type

Color	Item No.	PU (SPU)
gray	235-100	2000 (100)
blue	235-400	2000 (100)
orange	235-600	2000 (100)
white	235-850	2000 (100)
black	235-500	2000 (100)
yellow	235-550	2000 (100)
light gray	235-300	2000 (100)
light green	235-700	2000 (100)
violet	235-650	2000 (100)
red	235-800	2000 (100)
dark gray	235-200	2000 (100)



Intermediate plate; extends pin spacing; Width: 5 mm / 0.197 inches

Color	Item No.	PU (SPU)
gray	235-701	1000 (100)

PU = packaging unit; SPU = subpackaging unit; Dimensions in mm

Variants:

- Other colors
- Other versions (or variants) can be requested from WAGO Sales or configured at https://configurator.wago.com/.

PCB terminal block ▸ 235 Series

PUSH WIRE® ▸ Actuation type: Operating tool ▸ 1.5 mm² ▸ Pin spacing: 3.81 mm / 0.15 inches ▸ Color: orange

1

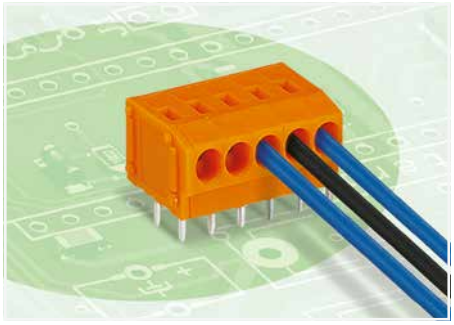

- Low-profile terminal strips with screwdriver-actuated PUSH WIRE® termination
- Push-in termination of solid conductors
- Double solder pins for high mechanical stability
- Conductor removal via screwdriver (2.5 mm blade width)

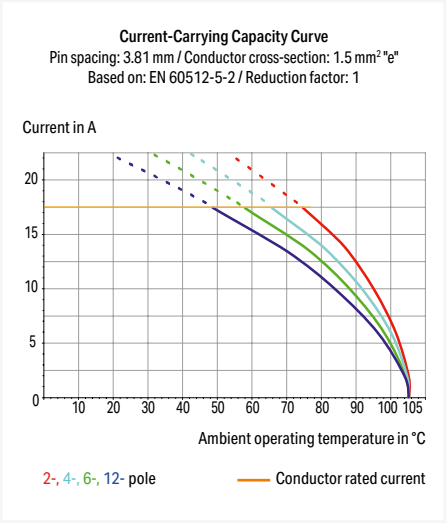

Electrical data			
Pin spacing	**3.81 mm / 0.15 inches**		
Ratings per	**IEC/EN 60664-1**		
Overvoltage category	III	III	II
Pollution degree	3	2	2
Nominal voltage	200 V	320 V	500 V
Rated impulse withstand voltage	4 kV	4 kV	4 kV
Rated current	17.5 A	17.5 A	17.5 A
Approvals per	**UL 1059**		
Use group	B	C	D
Rated voltage	300 V	-	300 V
Rated current	10 A	-	10 A

Connection Data	
Connection technology	PUSH WIRE®
Strip length	9 … 10 mm / 0.35 … 0.39 inches
Conductor connection direction to PCB	0 °
Solid conductor	0.5 … 1.5 mm² / 20 … 16 AWG
Fine-stranded conductor; with insulated ferrule	0.25 … 0.75 mm²
Fine-stranded conductor; with uninsulated ferrule	0.25 … 0.75 mm²
Material data	
Material group	I
Insulation material (main housing)	Polyamide (PA66)
Flammability class per UL94	V0
Clamping spring material	Chrome-nickel spring steel (CrNi)
Contact material	Electrolytic copper (E_{Cu})
Contact Plating	Tin
Mechanical data	
Solder pin arrangement	over the entire terminal strip (in-line)
Number of solder pins per potential	2
Solder pin length	3.6 mm
Solder pin dimensions	0.8 x 0.4 mm
Drilled hole diameter	1 $^{(+0.1)}$ mm
Environmental requirements	
Limit temperature range	-60 … +105 °C

Ferrule	Page 1081
Marking	Page 1066
Tool	Page 1072

See technical section for further information

Approvals and corresponding ratings, visit www.wago.com

PCB terminal block ▸ 235 Series

PUSH WIRE® ▸ Actuation type: Operating tool ▸ 1.5 mm² ▸ Pin spacing: 3.81 mm / 0.15 inches ▸ Color: orange

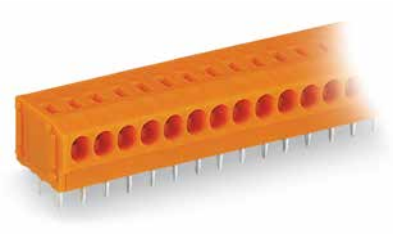

235-110/330-000

Pole number	Item No.	PU (SPU)
2	**235-102/330-000**	520 (130)
3	**235-103/330-000**	360 (90)
4	**235-104/330-000**	280 (70)
5	**235-105/330-000**	220 (55)
6	**235-106/330-000**	180 (45)
7	**235-107/330-000**	160 (40)
8	**235-108/330-000**	140 (35)
9	**235-109/330-000**	120 (30)
10	**235-110/330-000**	120 (30)

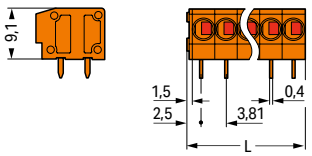

L = (pole no. x pin spacing) + 1.5 mm

PU = packaging unit; SPU = subpackaging unit; Dimensions in mm

Variants:

- Other pole numbers
- Other colors
- Mixed-color PCB connector strips
- Direct marking
- Other versions (or variants) can be requested from WAGO Sales or configured at https://configurator.wago.com/.

254 Series
Description and Installation

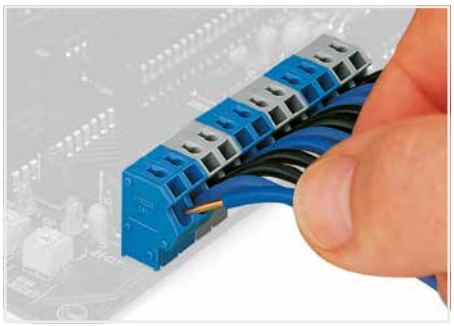

Inserting a solid conductors via push-in termination.

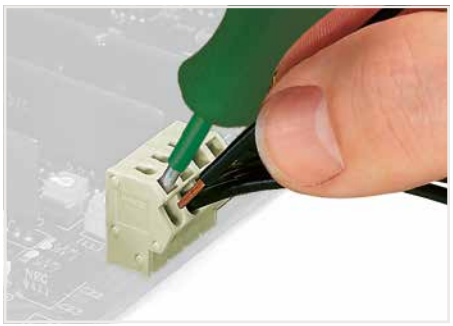

Inserting a tip-bonded conductor via screwdriver.

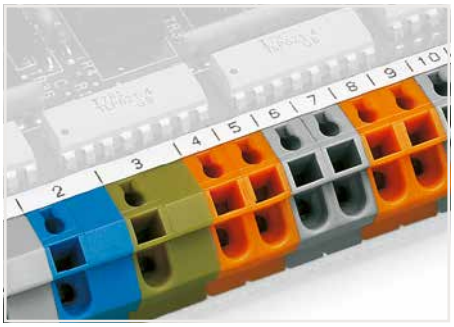

Labeling via self-adhesive marking strips.

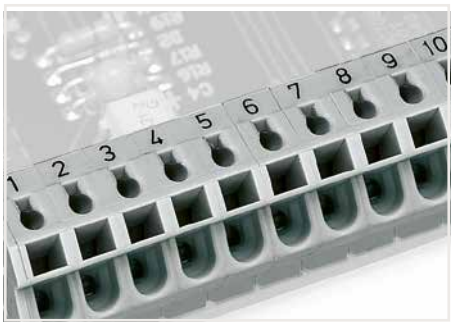

Labeling via factory direct marking.

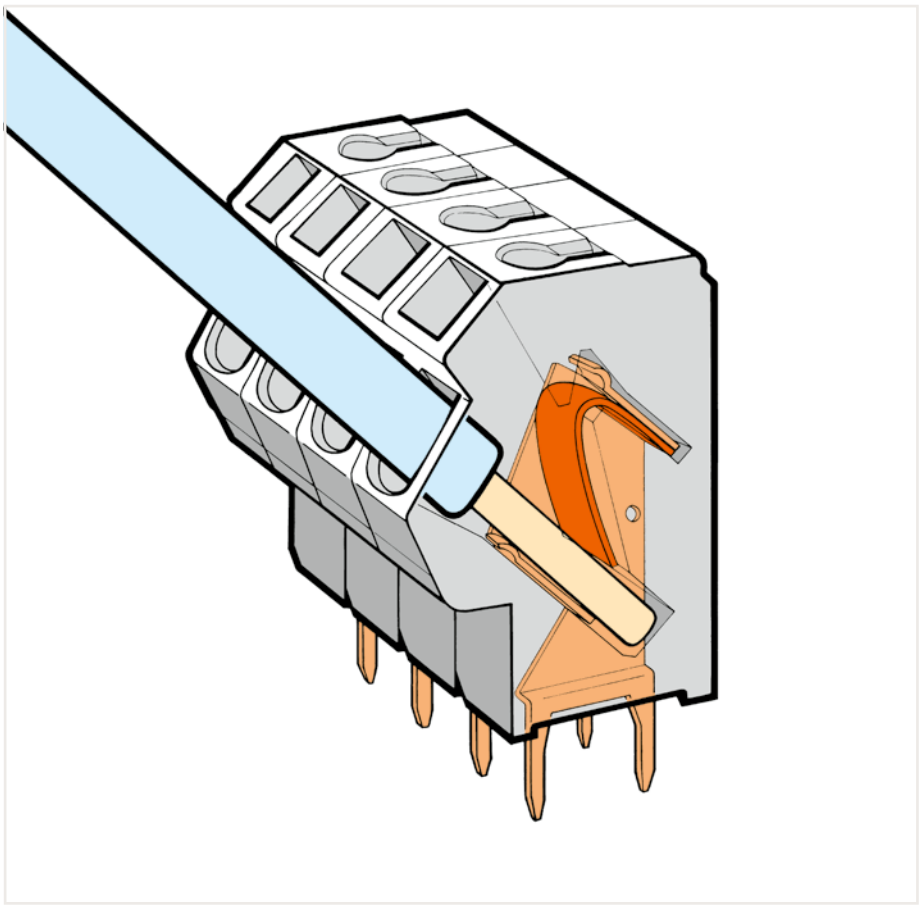

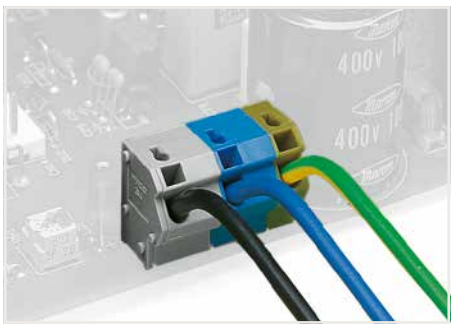

Application example: field-wiring terminal strip

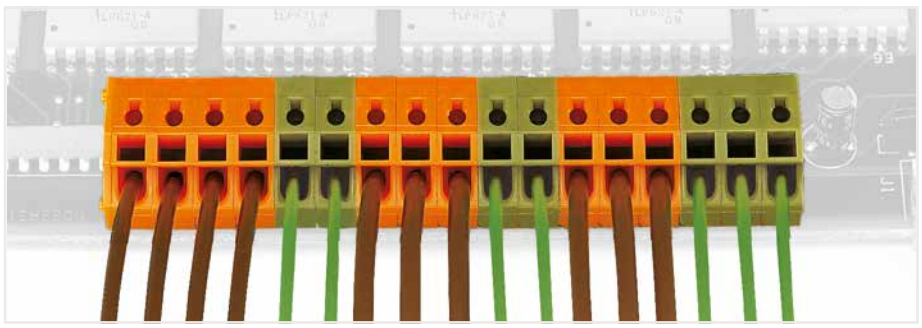

Mixed terminal strips can be assembled using different housing colors for the formation of groups.

254 Series
Description and Installation

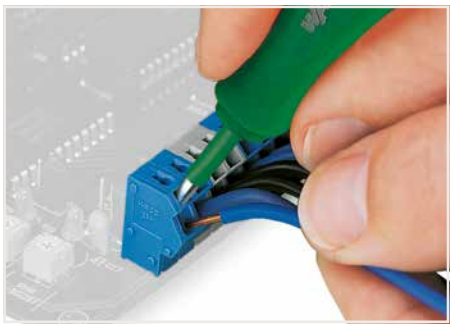

Removing a conductor.

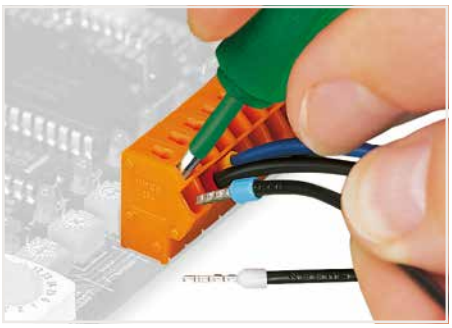

Inserting/removing a ferruled conductor.

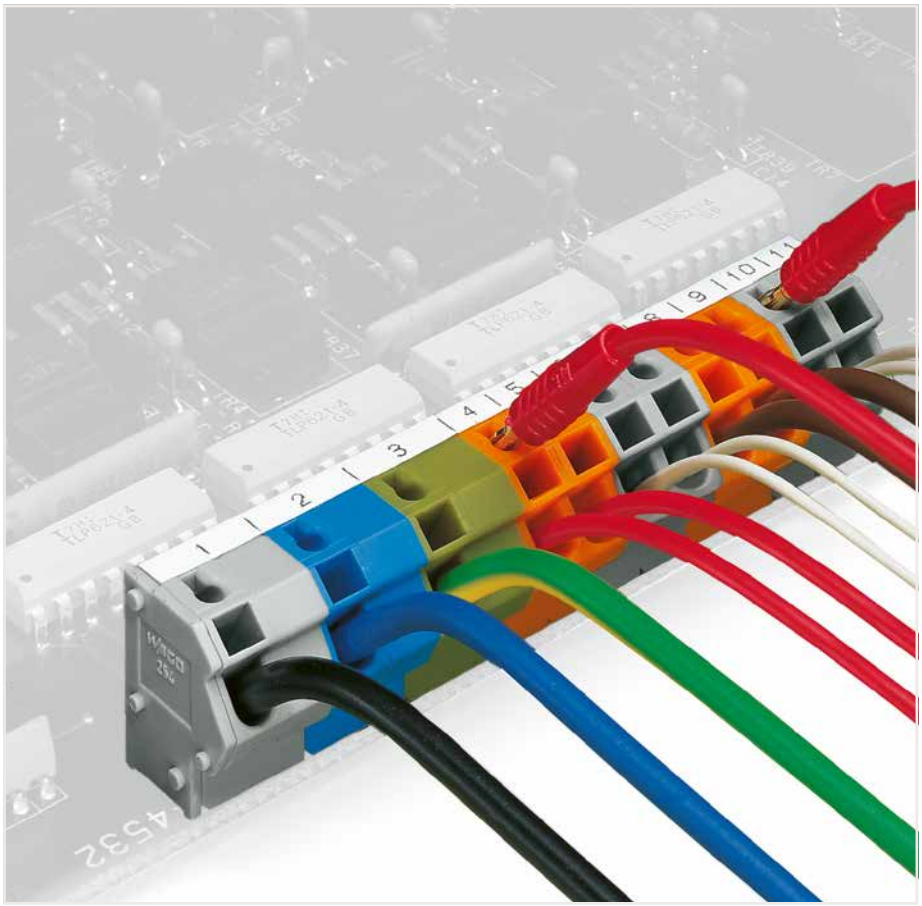



Testing with 2 mm Ø test plug.

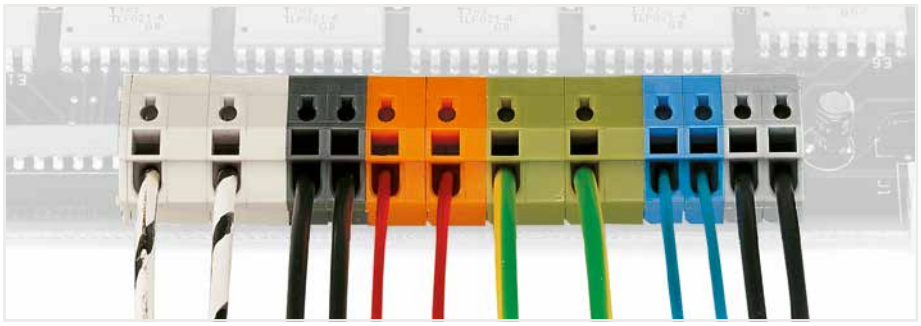

Mixed terminal strips can be assembled using different pin spacing and housing colors for the formation of groups.

Stackable PCB terminal block ▸ 254 Series

PUSH WIRE® ▸ Actuation type: Operating tool ▸ 2.5 mm²

1



- Modular PCB terminal blocks with PUSH WIRE® connection and screwdriver actuation for custom terminal strip assemblies
- Push-in termination of solid and ferruled conductors
- Test socket for 2 mm Ø test plug
- Save space on the PCB, just 8.9 mm deep
- Also available with 2-conductor connection

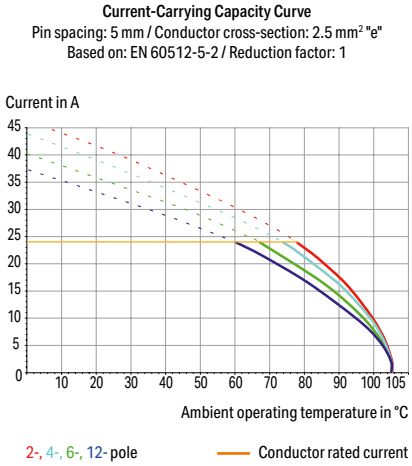

Electrical data									
Pin spacing	**5/5.08 mm / 0.197/0.2 inches**			**7.5/7.62 mm / 0.295/0.3 inches**			**10/10.16 mm / 0.394/0.4 inches**		
Ratings per	**IEC/EN 60664-1**			**IEC/EN 60664-1**			**IEC/EN 60664-1**		
Overvoltage category	III	III	II	III	III	II	III	III	II
Pollution degree	3	2	2	3	2	2	3	2	2
Nominal voltage	320 V	320 V	630 V	500 V	630 V	1000 V	630 V	1000 V	1000 V
Rated impulse withstand voltage	4 kV	4 kV	4 kV	6 kV	6 kV	6 kV	8 kV	8 kV	8 kV
Rated current	24 A	24 A	24 A	24 A	24 A	24 A	24 A	24 A	24 A
Approvals per	**UL 1059**			**UL 1059**			**UL 1059**		
Use group	B	C	D	B	C	D	B	C	D
Rated voltage	300 V	-	300 V	300 V	-	300 V	300 V	-	300 V
Rated current	10 A	-	10 A	10 A	-	10 A	10 A	-	10 A
Approvals per	**CSA**			**CSA**			**CSA**		
Use group	B	C	D	B	C	D	B	C	D
Rated voltage	300 V	-	300 V	300 V	-	300 V	300 V	-	300 V
Rated current	10 A	-	10 A	10 A	-	10 A	10 A	-	10 A

Connection Data	
Connection technology	PUSH WIRE®
Strip length	10 … 12 mm / 0.39 … 0.47 inches
Conductor connection direction to PCB	45 °
Solid conductor	0.5 … 2.5 mm² / 20 … 12 AWG
Fine-stranded conductor; with insulated ferrule	0.5 … 1.5 mm²
Fine-stranded conductor; with uninsulated ferrule	0.5 … 1.5 mm²
Note (conductor cross-section)	12 AWG: THHN, THWN

Material data	
Material group	I
Insulation material (main housing)	Polyamide (PA66)
Flammability class per UL94	V0
Clamping spring material	Chrome-nickel spring steel (CrNi)
Contact material	Electrolytic copper (E_{Cu})
Contact Plating	Tin

Mechanical data	
Solder pin arrangement	within the terminal block (in-line)
Number of solder pins per potential	2
Solder pin length	4 mm
Solder pin dimensions	0.5 x 0.75 mm
Drilled hole diameter	1.1 $^{(+0.1)}$ mm

Environmental requirements	
Limit temperature range	-60 … +105 °C

Marking	Page 1067
Test and measurement	Page 1088
Tool	Page 1072
See technical section for further information	
Approvals and corresponding ratings, visit www.wago.com	

Stackable PCB terminal block ▸ 254 Series

PUSH WIRE® ▸ Actuation type: Operating tool ▸ 2.5 mm²

Pin spacing: 5/5.08 mm / 0.197/0.2 inches



254-451

Color	Item No.	PU (SPU)
gray	254-451	500 (100)
blue	254-844	500 (100)
orange	254-846	500 (100)
light gray	254-843	500 (100)
green-yellow	254-848	500 (100)
light green	254-847	500 (100)
dark gray	254-842	500 (100)

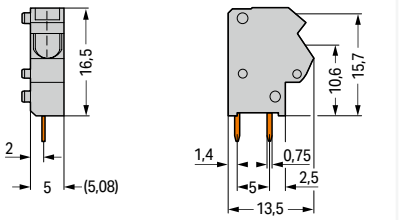

Pin spacing: 7.5/7.62 mm / 0.295/0.3 inches



254-551

Color	Item No.	PU (SPU)
gray	254-551	400 (100)
blue	254-854	400 (100)
orange	254-856	400 (100)
light gray	254-853	400 (100)
light green	254-857	400 (100)
dark gray	254-852	400 (100)

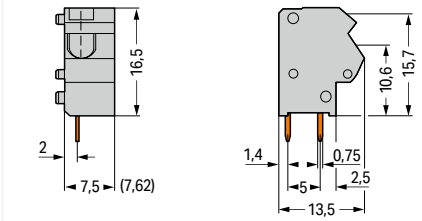

Pin spacing: 10/10.16 mm / 0.394/0.4 inches



254-651

Color	Item No.	PU (SPU)
gray	254-651	300 (100)
blue	254-864	300 (100)
orange	254-866	300 (100)
light gray	254-863	300 (100)
light green	254-867	300 (100)
dark gray	254-862	300 (100)

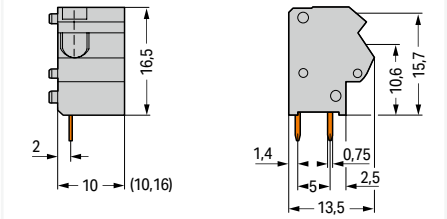

Accessories; for all products on this page



End plate; Width: 1 mm; snap-on type

Color	Item No.	PU (SPU)
gray	254-100	2000 (100)
blue	254-400	2000 (100)
orange	254-600	2000 (100)
light gray	254-300	2000 (100)
light green	254-700	2000 (100)
dark gray	254-200	2000 (100)

PU = packaging unit; SPU = subpackaging unit; Dimensions in mm

Variants:

- Other colors
- Other versions (or variants) can be requested from WAGO Sales or configured at https://configurator.wago.com/.

PCB terminal block ▸ 254 Series

PUSH WIRE® ▸ Actuation type: Operating tool ▸ 2.5 mm² ▸ Color: gray

1

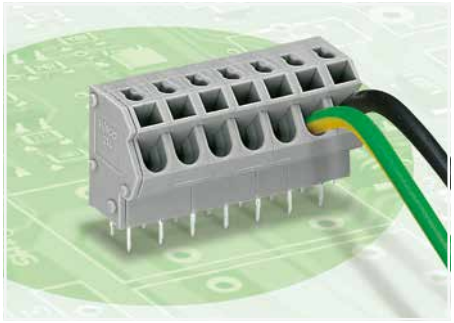

- PCB terminal strips with screwdriver-actuated PUSH WIRE® termination
- Push-in termination of solid and ferruled, fine-stranded conductors
- Test socket for 2 mm Ø test plug
- Save space on the PCB, just 8.9 mm deep

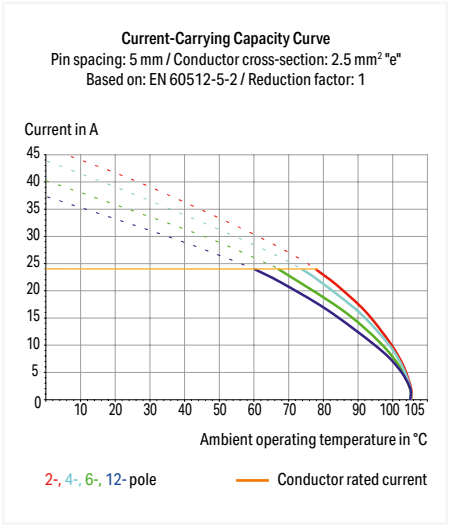

Electrical data									
Pin spacing	**5/5.08 mm / 0.197/0.2 inches**			**7.5/7.62 mm / 0.295/0.3 inches**			**10/10.16 mm / 0.394/0.4 inches**		
Ratings per	**IEC/EN 60664-1**			**IEC/EN 60664-1**			**IEC/EN 60664-1**		
Overvoltage category	III	III	II	III	III	II	III	III	II
Pollution degree	3	2	2	3	2	2	3	2	2
Nominal voltage	320 V	320 V	630 V	500 V	630 V	1000 V	630 V	1000 V	1000 V
Rated impulse withstand voltage	4 kV	4 kV	4 kV	6 kV	6 kV	6 kV	8 kV	8 kV	8 kV
Rated current	24 A	24 A	24 A	24 A	24 A	24 A	24 A	24 A	24 A
Approvals per	**UL 1059**			**UL 1059**			**UL 1059**		
Use group	B	C	D	B	C	D	B	C	D
Rated voltage	300 V	-	300 V	300 V	-	300 V	300 V	-	300 V
Rated current	10 A	-	10 A	10 A	-	10 A	10 A	-	10 A
Approvals per	**CSA**			**CSA**			**CSA**		
Use group	B	C	D	B	C	D	B	C	D
Rated voltage	300 V	-	300 V	300 V	-	300 V	300 V	-	300 V
Rated current	10 A	-	10 A	10 A	-	10 A	10 A	-	10 A

Connection Data	
Connection technology	PUSH WIRE®
Strip length	10 … 12 mm / 0.39 … 0.47 inches
Conductor connection direction to PCB	45 °
Solid conductor	0.5 … 2.5 mm² / 20 … 12 AWG
Fine-stranded conductor; with insulated ferrule	0.5 … 1.5 mm²
Fine-stranded conductor; with uninsulated ferrule	0.5 … 1.5 mm²
Note (conductor cross-section)	12 AWG: THHN, THWN

Material data	
Material group	I
Insulation material (main housing)	Polyamide (PA66)
Flammability class per UL94	V0
Clamping spring material	Chrome-nickel spring steel (CrNi)
Contact material	Electrolytic copper (E_{Cu})
Contact Plating	Tin

Mechanical data	
Solder pin arrangement	over the entire terminal strip (in-line)
Number of solder pins per potential	2
Solder pin length	4 mm
Solder pin dimensions	0.5 x 0.75 mm
Drilled hole diameter	1.1 $^{(+0.1)}$ mm

Environmental requirements	
Limit temperature range	-60 … +105 °C

Marking	Page 1067
Test and measurement	Page 1088
Tool	Page 1072
See technical section for further information	
Approvals and corresponding ratings, visit www.wago.com	

PCB terminal block ▸ 254 Series

PUSH WIRE® ▸ Actuation type: Operating tool ▸ 2.5 mm² ▸ Color: gray

Pin spacing: 5/5.08 mm / 0.197/0.2 inches



254-462

Pole number	Item No.	PU (SPU)
2	254-452	420 (105)
3	254-453	280 (70)
4	254-454	220 (55)
5	254-455	180 (45)
6	254-456	140 (35)
7	254-457	120 (30)
8	254-458	100 (25)
9	254-459	100 (25)
10	254-460	80 (20)
12	254-462	80 (20)
16	254-466	60 (15)
24	254-474	40 (10)

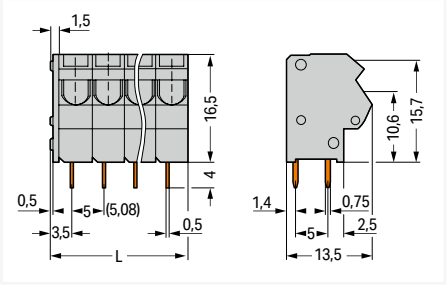

L = (pole no. x pin spacing) + 1.5 mm

Pin spacing: 7.5/7.62 mm / 0.295/0.3 inches

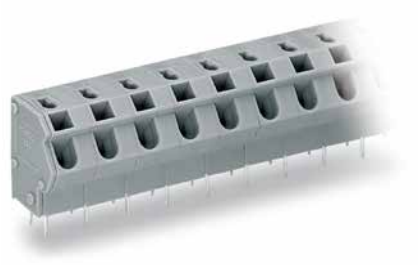

254-558

Pole number	Item No.	PU (SPU)
2	254-552	280 (70)
3	254-553	200 (50)
4	254-554	140 (35)
5	254-555	120 (30)
6	254-556	100 (25)
7	254-557	80 (20)
8	254-558	80 (20)
9	254-559	60 (15)
10	254-560	60 (15)
12	254-562	40 (10)

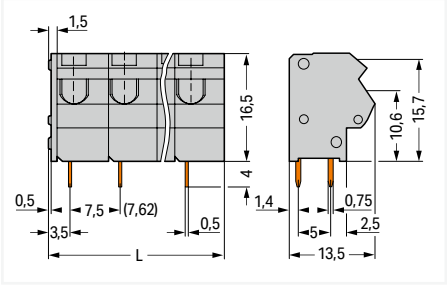

L = (pole no. x pin spacing) + 1.5 mm

Pin spacing: 10/10.16 mm / 0.394/0.4 inches

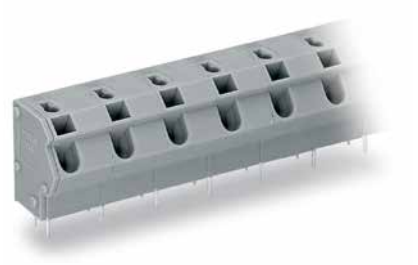

254-656

Pole number	Item No.	PU (SPU)
2	254-652	200 (50)
3	254-653	160 (40)
4	254-654	100 (25)
5	254-655	80 (20)
6	254-656	80 (20)
7	254-657	60 (15)
8	254-658	60 (15)
9	254-659	40 (10)
10	254-660	40 (10)
12	254-662	40 (10)

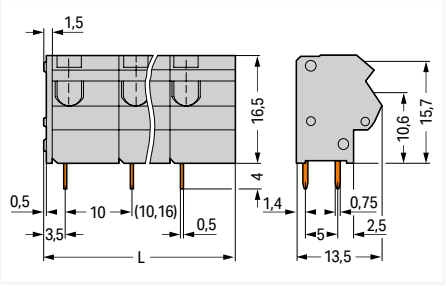

L = (pole no. x pin spacing) + 1.5 mm

PU = packaging unit; SPU = subpackaging unit; Dimensions in mm

Variants:

- Other pole numbers
- Other colors
- Mixed-color PCB connector strips
- Direct marking
- Other versions (or variants) can be requested from WAGO Sales or configured at https://configurator.wago.com/.

PCB terminal block ▸ 744 Series

PUSH WIRE® ▸ Actuation type: Operating tool ▸ 1.5 mm² ▸ Pin spacing: 3.5 mm / 0.138 inches ▸ Color: white

1

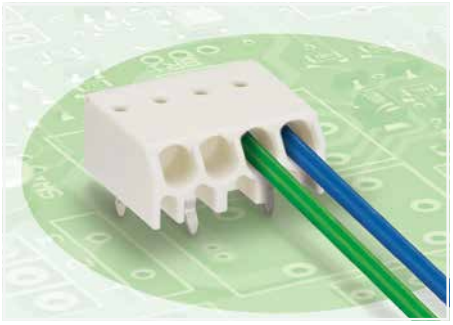

- PCB terminal blocks with PUSH WIRE® connection
- Push-in termination of solid conductors – low insertion forces
- Just 6.6 mm tall
- Conductor removal via disconnection tool or by twist & pull

Electrical data			
Pin spacing	**3.5 mm / 0.138 inches**		
Ratings per	**IEC/EN 60664-1**		
Overvoltage category	III	III	II
Pollution degree	3	2	2
Nominal voltage	250 V	320 V	630 V
Rated impulse withstand voltage	4 kV	4 kV	4 kV
Rated current	3 A	3 A	3 A
Approvals per	**UL 1059**		
Use group	B	C	D
Rated voltage	300 V	-	300 V
Rated current	6 A	-	6 A
Connection Data			
Connection technology	PUSH WIRE®		
Strip length	8 … 9 mm / 0.31 … 0.35 inches		
Conductor connection direction to PCB	0 °		
Solid conductor	0.5 … 1.5 mm² / 20 … 16 AWG		
Material data			
Material group	I		
Insulation material (main housing)	Polyamide (PA66)		
Flammability class per UL94	V0		
Clamping spring material	Copper alloy		
Contact Plating	Tin		
Mechanical data			
Solder pin arrangement	over the entire terminal strip (staggered)		
Number of solder pins per potential	1		
Solder pin dimensions	0.35 x 0.9 mm		
Drilled hole diameter	1.1 (+0.1) mm		
Environmental requirements			
Limit temperature range	-60 … +105 °C		

Tool Page 1074

See technical section for further information

Approvals and corresponding ratings, visit www.wago.com

PCB terminal block ▸ 744 Series

PUSH WIRE® ▸ Actuation type: Operating tool ▸ 1.5 mm² ▸ Pin spacing: 3.5 mm / 0.138 inches ▸ Color: white

Solder pin length: 2.4 mm



744-304/364-000

Pole number	Item No.	PU
2	**744-392/364-000**	1500
3	**744-303/364-000**	1000
4	**744-304/364-000**	800
6	**744-306/364-000**	500
7	**744-307/364-000**	300
8	**744-308/364-000**	300
10	**744-310/364-000**	200

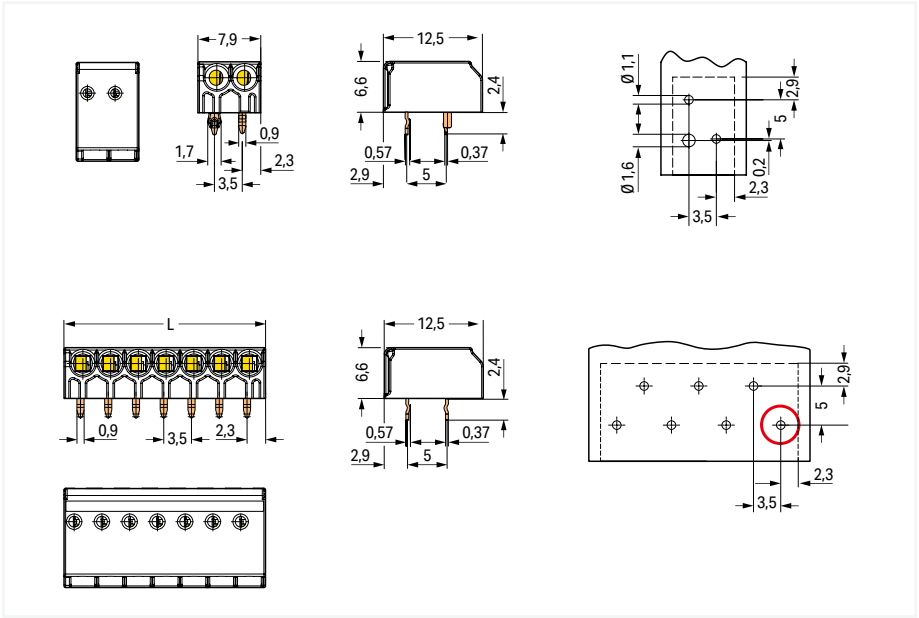

"Two-pole version with additional anti-rotating pin
For 3 poles and more, L = (pole no. x pin spacing) + 0.9 mm
First solder pin, front right (red circle)"

PU = packaging unit; SPU = subpackaging unit; Dimensions in mm

PCB terminal block ▸ 744 Series

PUSH WIRE® ▸ Actuation type: Operating tool ▸ 1.5 mm² ▸ Pin spacing: 3.5 mm / 0.138 inches ▸ Color: white

1

Solder pin length: 3.5 mm



744-304



Inserting a conductor via push-in termination.



Removing a conductor via 1.0 mm Ø disconnection tool (206-841).

Pole number	Item No.	PU
2	**744-392**	1500
3	**744-303**	1000
4	**744-304**	800
6	**744-306**	500
7	**744-307**	300
8	**744-308**	300
10	**744-310**	200

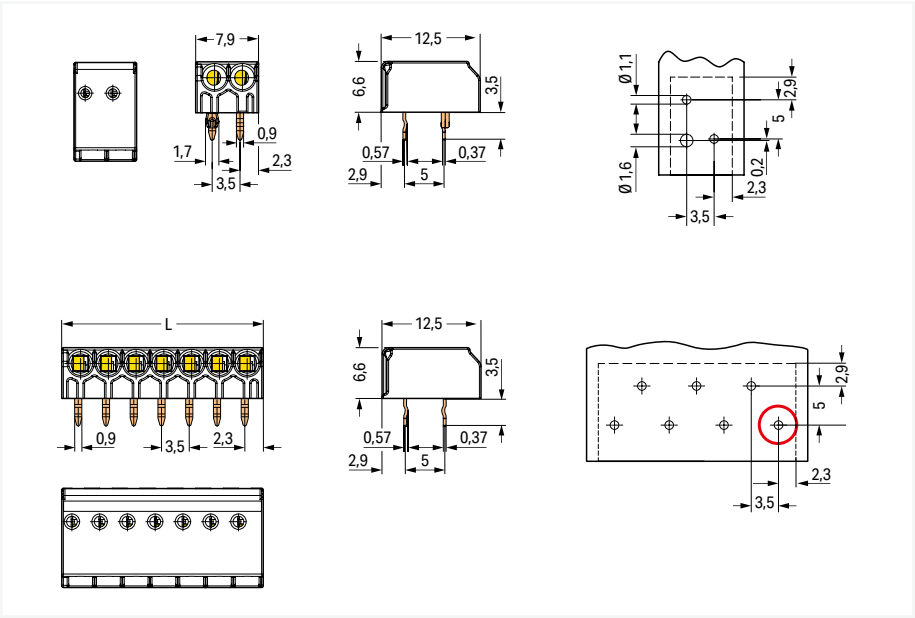

Two-pole version with additional anti-rotating pin
For 3 poles and more, L = (pole no. x pin spacing) + 0.9 mm
First solder pin, front right (red circle)

PU = packaging unit; SPU = subpackaging unit; Dimensions in mm

2-conductor PCB terminal block ▸ 253 Series

PUSH WIRE® ▸ Actuation type: Operating tool ▸ 1.5 mm² ▸ Pin spacing: 5 mm / 0.197 inches ▸ Color: gray

1

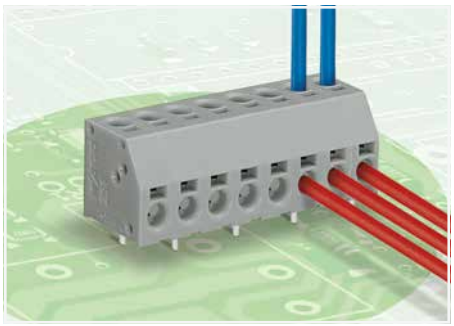

- PCB terminal strips with screwdriver-actuated PUSH WIRE® termination
- Double-conductor connection provides top-entry (vertical) and/or side-entry (horizontal) wiring
- Push-in termination of solid conductors
- Double entries for power supply and potential distribution

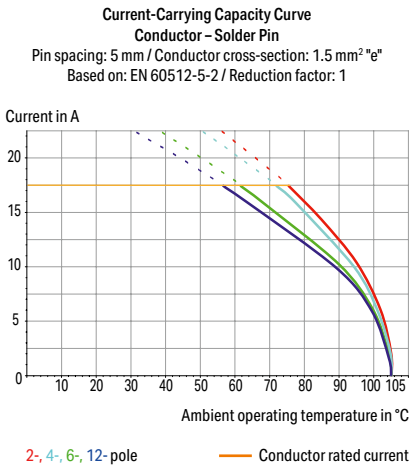

Electrical data			
Pin spacing	**5 mm / 0.197 inches**		
Ratings per	**IEC/EN 60664-1**		
Overvoltage category	III	III	II
Pollution degree	3	2	2
Nominal voltage	320 V	320 V	630 V
Rated impulse withstand voltage	4 kV	4 kV	4 kV
Rated current	17.5 A	17.5 A	17.5 A
Approvals per	**UL 1059**		
Use group	B	C	D
Rated voltage	300 V	-	300 V
Rated current	8 A	-	5 A
Approvals per	**CSA**		
Use group	B	C	D
Rated voltage	300 V	-	300 V
Rated current	8 A	-	5 A

Connection Data	
Connection type	PUSH WIRE® connection
Connection technology	PUSH WIRE®
Number of connection points	1
Strip length	8.5 … 9.5 mm / 0.33 … 0.37 inches
Note (strip length)	7 … 8 mm / 0.28 … 0.31 inch (for wiring on both sides)
Conductor connection direction to PCB	0 °
Solid conductor	0.5 … 1.5 mm² / 20 … 16 AWG
Connection type	PUSH WIRE® connection
Connection technology	PUSH WIRE®
Number of connection points	1
Strip length	8.5 … 9.5 mm / 0.33 … 0.37 inches
Note (strip length)	7 … 8 mm / 0.28 … 0.31 inch (for wiring on both sides)
Conductor connection direction to PCB	90 °
Solid conductor	0.5 … 1.5 mm² / 20 … 16 AWG

Material data	
Material group	I
Insulation material (main housing)	Polyamide (PA66)
Flammability class per UL94	V0
Clamping spring material	Chrome-nickel spring steel (CrNi)
Contact material	Electrolytic copper (E_{Cu})
Contact Plating	Tin

Mechanical data	
Solder pin arrangement	over the entire terminal strip (staggered)
Number of solder pins per potential	1
Solder pin length	3.6 mm
Solder pin dimensions	0.5 x 0.8 mm
Drilled hole diameter	1.1 $^{(+0.1)}$ mm

Environmental requirements	
Limit temperature range	-60 … +105 °C

Marking	Page 1067
Tool	Page 1072
See technical section for further information	
Approvals and corresponding ratings, visit www.wago.com	

2-conductor PCB terminal block ▸ 253 Series

PUSH WIRE® ▸ Actuation type: Operating tool ▸ 1.5 mm² ▸ Pin spacing: 5 mm / 0.197 inches ▸ Color: gray



253-112

Pole number	Item No.	PU (SPU)
2	**253-102**	400 (100)
3	**253-103**	280 (70)
4	**253-104**	220 (55)
5	**253-105**	160 (40)
6	**253-106**	140 (35)
7	**253-107**	120 (30)
8	**253-108**	100 (25)
9	**253-109**	100 (25)
10	**253-110**	80 (20)
11	**253-111**	80 (20)
12	**253-112**	60 (15)
13	**253-113**	60 (15)
14	**253-114**	60 (15)
15	**253-115**	60 (15)
16	**253-116**	40 (10)

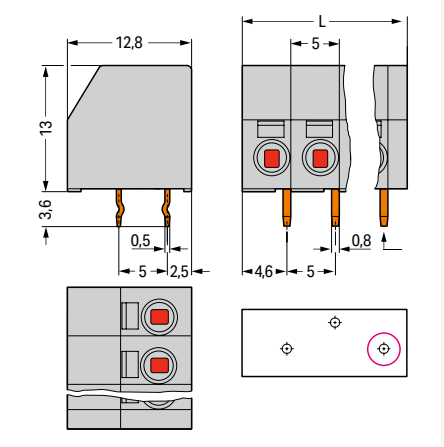

L = (pole no. x pin spacing) + 2 mm
First solder pin, front right (red circle)

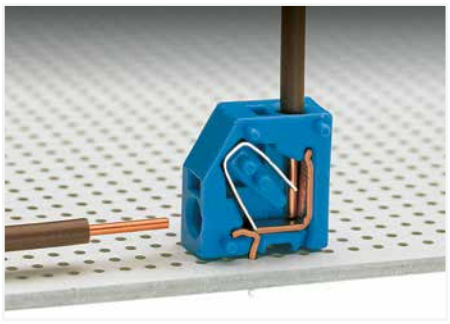

Inserting a conductor via push-in termination.

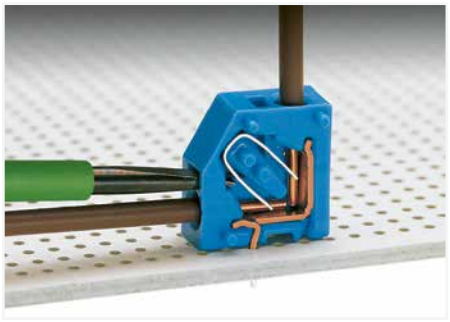

Removing a conductor via 2.5 mm screwdriver.

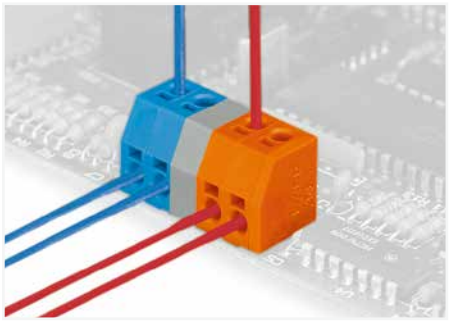

Mixed-color terminal strips (with or without spacer) are available upon request.

PU = packaging unit; SPU = subpackaging unit; Dimensions in mm

Variants:
- Other pole numbers
- Other colors
- Mixed-color PCB connector strips
- Direct marking
- Other versions (or variants) can be requested from WAGO Sales or configured at https://configurator.wago.com/.

742 Series
Description and Installation

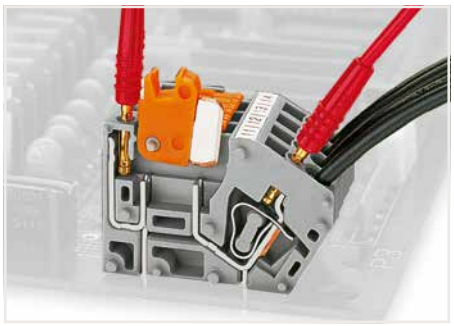
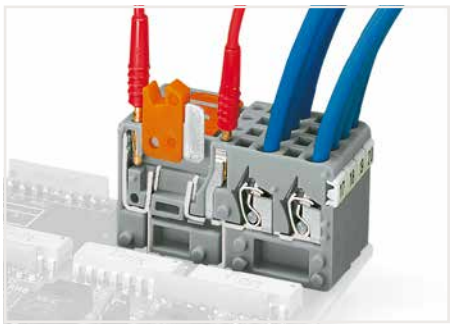
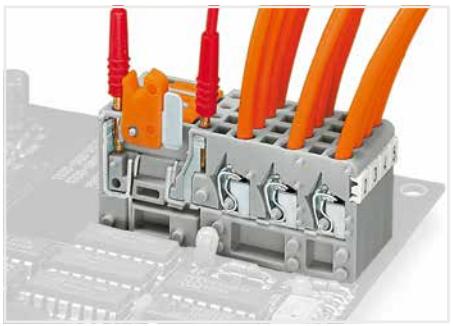

Testing all PCB disconnect terminal blocks via 2 mm or 2.3 mm Ø test plugs.



Opening a knife disconnect.

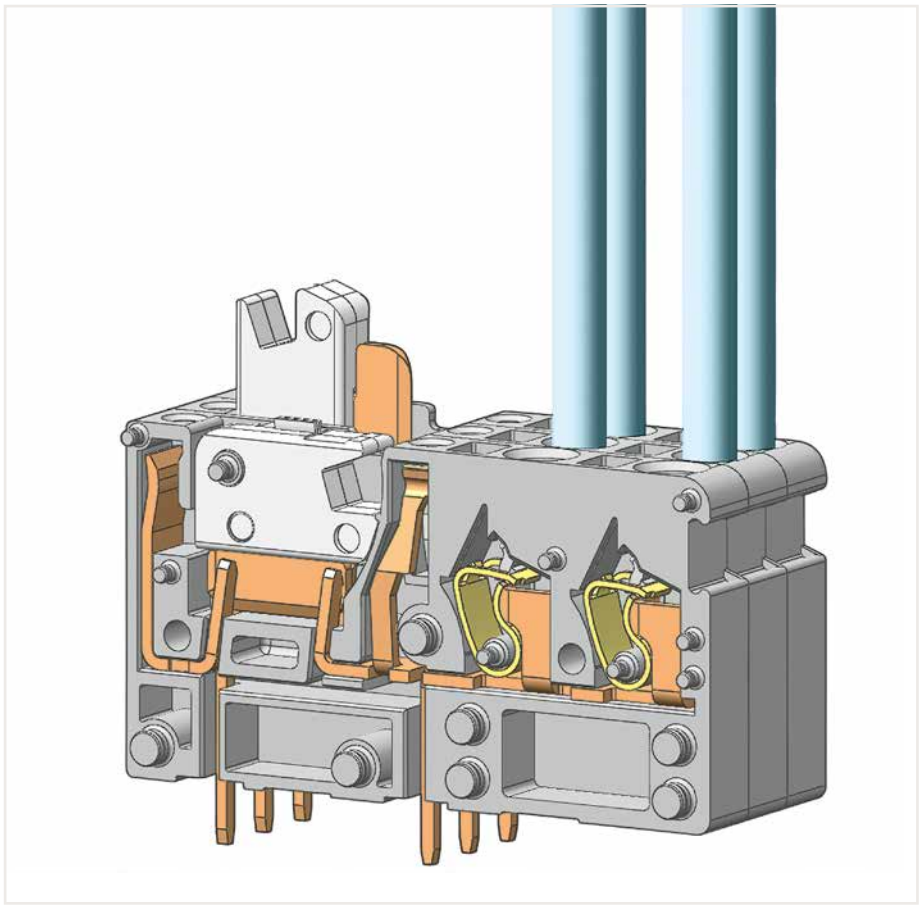

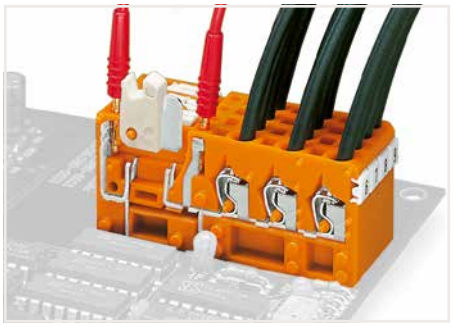

Distributing potentials via 3-conductor terminal blocks.


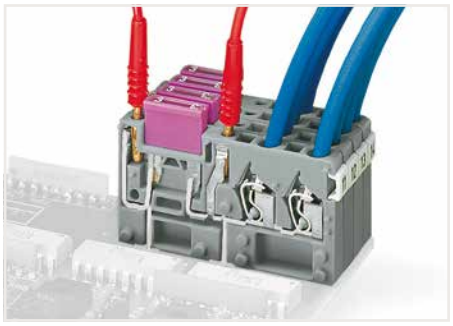


Testing all PCB fuse terminal blocks via 2 mm or 2.3 mm Ø test plugs.

742 Series
Description and Installation



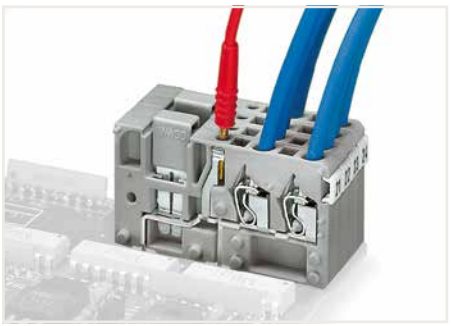

Testing all PCB terminal blocks via 2 mm or 2.3 mm Ø test plugs.

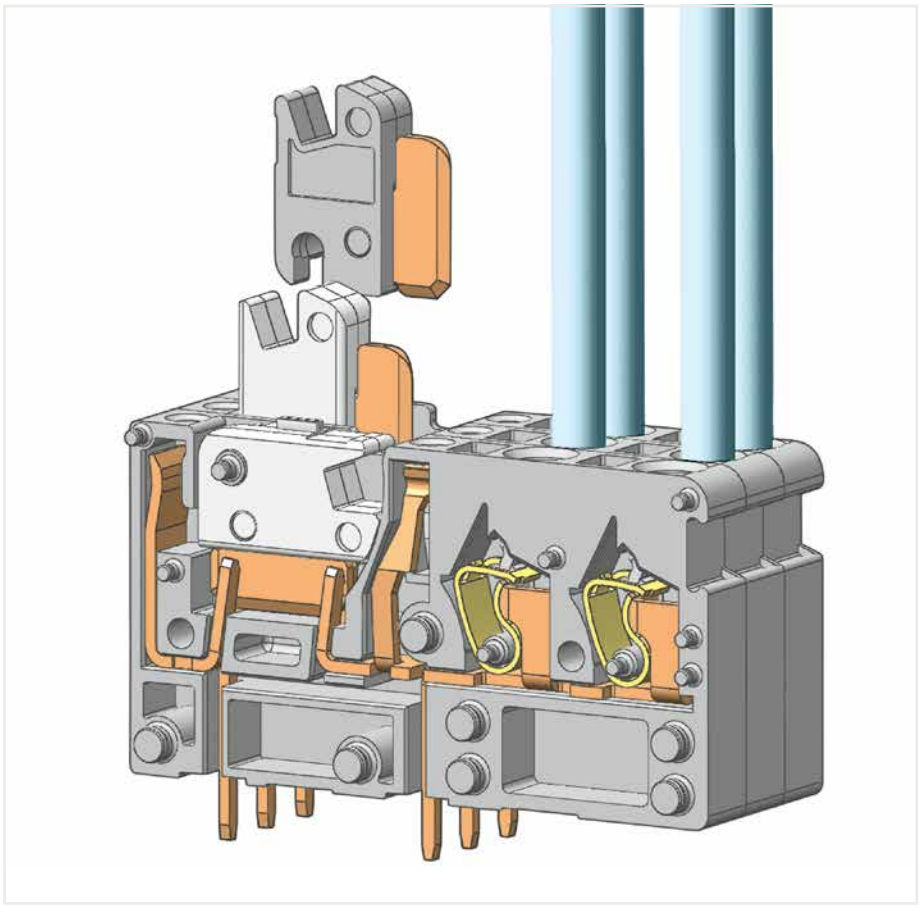

Disconnect terminal blocks with removable knife disconnect are available upon request.



Mixed-color terminal strips are available upon request.

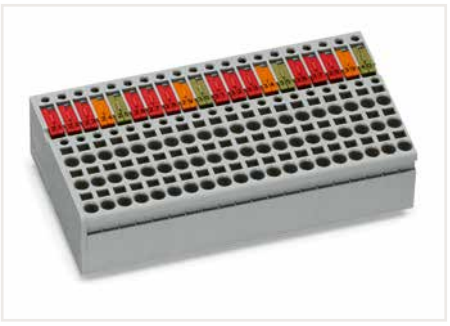

Mixed-color knife disconnect/test terminal strips are available upon request.

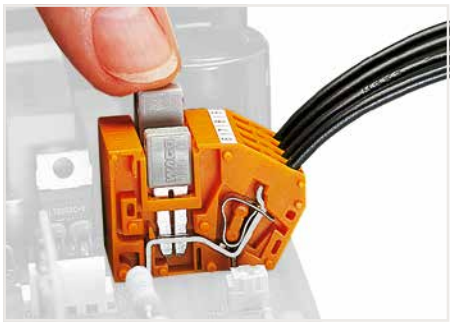

Commoning with adjacent jumpers – push jumpers down until fully inserted.



Inserting a fuse.



Custom PCB terminal strips are available upon request.

Stackable PCB terminal block ▸ 742 Series

Disconnect terminal block for test and measurement ▸ CAGE CLAMP® ▸ Actuation type: Operating tool ▸ 2.5 mm² ▸ Pin spacing: 5 mm / 0.197 inches ▸ Color: gray

1



- Modular PCB terminal blocks with screwdriver-actuated CAGE CLAMP® connection
- Power circuit disconnection via knife disconnect, e.g., for regular testing and measuring
- Test sockets on both sides of knife disconnect for 2.0 mm or 2.3 mm Ø test plugs
- 2- and 3-conductor PCB terminal blocks for distributing potentials independently of PCB
- Versions with removable knife disconnects available upon request

Electrical data						
Pin spacing	**5 mm / 0.197 inches**			**5 mm / 0.197 inches**		
Number of connection points	**1**			**2; 3**		
Ratings per	**IEC/EN 60664-1**			**IEC/EN 60664-1**		
Overvoltage category	III	III	II	III	III	II
Pollution degree	3	2	2	3	2	2
Nominal voltage	320 V	320 V	630 V	320 V	320 V	630 V
Rated impulse withstand voltage	4 kV	4 kV	4 kV	4 kV	4 kV	4 kV
Rated current	16 A	16 A	16 A	16 A	16 A	16 A
Approvals per	**UL 1059**			**UL 1059**		
Use group	B	C	D	B	C	D
Rated voltage	300 V	-	300 V	300 V	-	300 V
Rated current	10 A	-	10 A	10 A	-	10 A
Approvals per	**CSA**			**CSA**		
Use group	B	C	D	B	C	D
Rated voltage	300 V	-	300 V	300 V	-	300 V
Rated current	16 A	-	10 A	10 A	-	10 A

Connection Data	
Connection technology	CAGE CLAMP®
Solid conductor	0.08 … 2.5 mm² / 28 … 12 AWG
Fine-stranded conductor	0.08 … 2.5 mm² / 28 … 12 AWG
Fine-stranded conductor; with insulated ferrule	0.25 … 1.5 mm²
Fine-stranded conductor; with uninsulated ferrule	0.25 … 1.5 mm²
Note (conductor cross-section)	12 AWG: THHN, THWN

Material data	
Material group	I
Insulation material (main housing)	Polyamide (PA66)
Flammability class per UL94	V0
Clamping spring material	Chrome-nickel spring steel (CrNi)
Contact material	Electrolytic copper (E_{Cu})
Contact Plating	Tin

Mechanical data	
Solder pin arrangement	within the terminal block (in-line)
Number of solder pins per potential	2
Solder pin length	4 mm
Solder pin dimensions	1 x 0.8 mm
Drilled hole diameter	1.4 $^{(+0.1)}$ mm

Environmental requirements	
Limit temperature range	-60 … +105 °C

Ferrule	Page 1081
Marking	Page 1064
Test and measurement	Page 1088
Tool	Page 1072
See technical section for further information	
Approvals and corresponding ratings, visit www.wago.com	

Stackable PCB terminal block ▸ 742 Series

Disconnect terminal block for test and measurement ▸ CAGE CLAMP® ▸ Actuation type: Operating tool ▸ 2.5 mm² ▸ Pin spacing: 5 mm / 0.197 inches ▸ Color: gray

1

Conductor connection direction to PCB: 60 ° ▸ Number of connection points: 1 ▸ Strip length: 8 … 9 mm / 0.31 … 0.35 inches



742-101

Color	Pole number	Item No.	PU (SPU)
gray	1	742-101	384 (96)

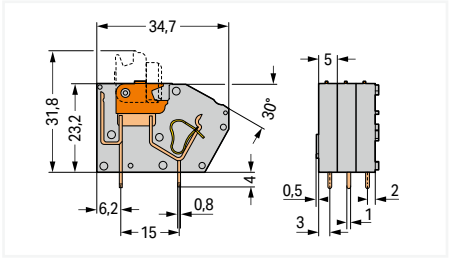

Item-Specific Accessories



End plate; Width: 1.5 mm; snap-on type

Color	Item No.	PU (SPU)
gray	742-100	300 (100)

Conductor connection direction to PCB: 90 ° ▸ Number of connection points: 2 ▸ Strip length: 6 … 7 mm / 0.24 … 0.28 inches

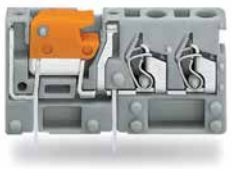

742-151

Color	Pole number	Item No.	PU
gray	1	742-151	200

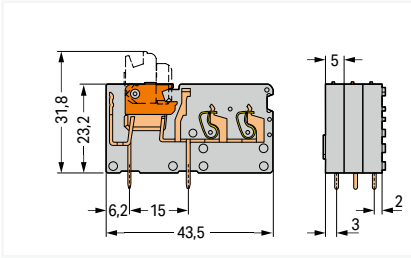

Item-Specific Accessories



End plate; Width: 1.5 mm; snap-on type

Color	Item No.	PU (SPU)
gray	742-150	300 (100)

Conductor connection direction to PCB: 90 ° ▸ Number of connection points: 3 ▸ Strip length: 6 … 7 mm / 0.24 … 0.28 inches

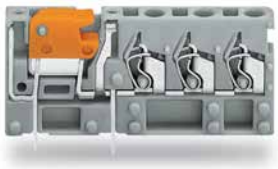

742-153

Color	Pole number	Item No.	PU
gray	1	742-153	100

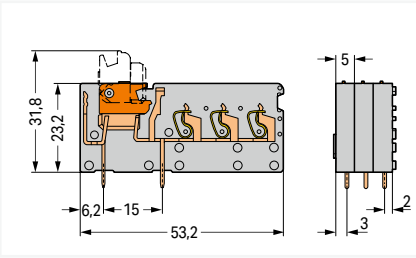

Item-Specific Accessories



End plate; Width: 1.5 mm; snap-on type

Color	Item No.	PU (SPU)
gray	742-152	300 (100)

PU = packaging unit; SPU = subpackaging unit; Dimensions in mm

Stackable PCB terminal block ▸ 742 Series

Disconnect terminal block for test and measurement ▸ CAGE CLAMP® ▸ Actuation type: Operating tool ▸ 2.5 mm² ▸ Pin spacing: 5.08 mm / 0.2 inches ▸ Color: orange

1



- Modular PCB terminal blocks with screwdriver-actuated CAGE CLAMP® connection
- Power circuit disconnection via knife disconnect, e.g., for regular testing and measuring
- Test sockets on both sides of knife disconnect for 2.0 mm or 2.3 mm Ø test plugs
- 2- and 3-conductor PCB terminal blocks for distributing potentials independently of PCB
- Versions with removable knife disconnects available upon request

Electrical data						
Pin spacing	**5.08 mm / 0.2 inches**			**5.08 mm / 0.2 inches**		
Number of connection points	**1**			**2; 3**		
Ratings per	**IEC/EN 60664-1**			**IEC/EN 60664-1**		
Overvoltage category	III	III	II	III	III	II
Pollution degree	3	2	2	3	2	2
Nominal voltage	320 V	320 V	630 V	320 V	320 V	630 V
Rated impulse withstand voltage	4 kV	4 kV	4 kV	4 kV	4 kV	4 kV
Rated current	16 A	16 A	16 A	16 A	16 A	16 A
Approvals per	**UL 1059**			**UL 1059**		
Use group	B	C	D	B	C	D
Rated voltage	300 V	-	300 V	300 V	-	300 V
Rated current	10 A	-	10 A	10 A	-	10 A
Approvals per	**CSA**			**CSA**		
Use group	B	C	D	B	C	D
Rated voltage	300 V	-	300 V	300 V	-	300 V
Rated current	16 A	-	10 A	10 A	-	10 A

Connection Data	
Connection technology	CAGE CLAMP®
Solid conductor	0.08 … 2.5 mm² / 28 … 12 AWG
Fine-stranded conductor	0.08 … 2.5 mm² / 28 … 12 AWG
Fine-stranded conductor; with insulated ferrule	0.25 … 1.5 mm²
Fine-stranded conductor; with uninsulated ferrule	0.25 … 1.5 mm²
Note (conductor cross-section)	12 AWG: THHN, THWN

Material data	
Material group	I
Insulation material (main housing)	Polyamide (PA66)
Flammability class per UL94	V0
Clamping spring material	Chrome-nickel spring steel (CrNi)
Contact material	Electrolytic copper (E_{Cu})
Contact Plating	Tin

Mechanical data	
Solder pin arrangement	within the terminal block (in-line)
Number of solder pins per potential	2
Solder pin length	4 mm
Solder pin dimensions	1 x 0.8 mm
Drilled hole diameter	1.4 $^{(+0.1)}$ mm

Environmental requirements	
Limit temperature range	-60 … +105 °C

Ferrule	Page 1081
Marking	Page 1064
Test and measurement	Page 1088
Tool	Page 1072
See technical section for further information	
Approvals and corresponding ratings, visit www.wago.com	

Stackable PCB terminal block ▸ 742 Series

Disconnect terminal block for test and measurement ▸ CAGE CLAMP® ▸ Actuation type: Operating tool ▸ 2.5 mm² ▸ Pin spacing: 5.08 mm / 0.2 inches ▸ Color: orange

Conductor connection direction to PCB: 60 ° ▸ Number of connection points: 1 ▸ Strip length: 8 … 9 mm / 0.31 … 0.35 inches



742-106

Color	Pole number	Item No.	PU (SPU)
orange	1	742-106	384 (96)

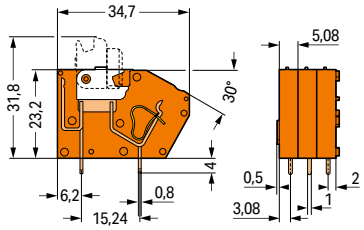

Item-Specific Accessories



End plate; Width: 1.5 mm; snap-on type

Color	Item No.	PU (SPU)
orange	742-600	300 (100)

Conductor connection direction to PCB: 90 ° ▸ Number of connection points: 2 ▸ Strip length: 6 … 7 mm / 0.24 … 0.28 inches



742-156

Color	Pole number	Item No.	PU
orange	1	742-156	200

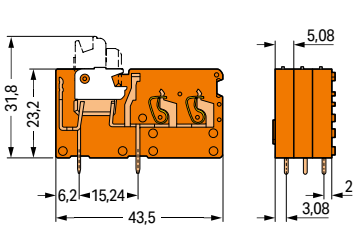

Item-Specific Accessories



End plate; Width: 1.5 mm; snap-on type

Color	Item No.	PU (SPU)
orange	742-650	300 (100)

Conductor connection direction to PCB: 90 ° ▸ Number of connection points: 3 ▸ Strip length: 6 … 7 mm / 0.24 … 0.28 inches



742-158

Color	Pole number	Item No.	PU
orange	1	742-158	100

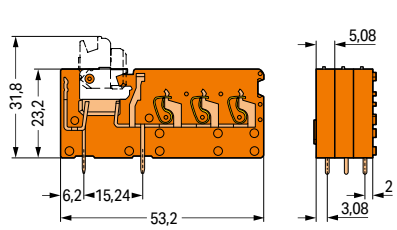

Item-Specific Accessories



End plate; Width: 1.5 mm; snap-on type

Color	Item No.	PU (SPU)
orange	742-651	300 (100)

PU = packaging unit; SPU = subpackaging unit; Dimensions in mm

Stackable PCB terminal block ▸ 742 Series

Commoning option ▸ CAGE CLAMP® ▸ Actuation type: Operating tool ▸ 2.5 mm² ▸ Pin spacing: 5 mm / 0.197 inches

1



- Modular PCB terminal blocks with screwdriver-actuated CAGE CLAMP® connection
- Adjacent jumpers for multiplying and distributing potentials
- Disconnect and fuse PCB terminal blocks can be combined to form complex function assemblies
- Test socket for 2.0 mm and 2.3 mm Ø test plugs

Electrical data						
Pin spacing	**5 mm / 0.197 inches**			**5 mm / 0.197 inches**		
Number of connection points	**1**			**2**		
Ratings per	**IEC/EN 60664-1**			**IEC/EN 60664-1**		
Overvoltage category	III	III	II	III	III	II
Pollution degree	3	2	2	3	2	2
Nominal voltage	250 V	320 V	630 V	320 V	320 V	630 V
Rated impulse withstand voltage	4 kV	4 kV	4 kV	4 kV	4 kV	4 kV
Rated current	16 A	16 A	16 A	16 A	16 A	16 A
Approvals per	**UL 1059**			**UL 1059**		
Use group	B	C	D	B	C	D
Rated voltage	300 V	-	300 V	300 V	-	300 V
Rated current	10 A	-	10 A	10 A	-	10 A
Approvals per	**CSA**			**CSA**		
Use group	B	C	D	B	C	D
Rated voltage	300 V	-	300 V	300 V	-	300 V
Rated current	16 A	-	10 A	10 A	-	10 A

Connection Data	
Connection technology	CAGE CLAMP®
Solid conductor	0.08 … 2.5 mm² / 28 … 12 AWG
Fine-stranded conductor	0.08 … 2.5 mm² / 28 … 12 AWG
Fine-stranded conductor; with insulated ferrule	0.25 … 1.5 mm²
Fine-stranded conductor; with uninsulated ferrule	0.25 … 1.5 mm²
Note (conductor cross-section)	12 AWG: THHN, THWN

Material data	
Material group	I
Insulation material (main housing)	Polyamide (PA66)
Flammability class per UL94	V0
Clamping spring material	Chrome-nickel spring steel (CrNi)
Contact material	Electrolytic copper (E_{Cu})
Contact Plating	Tin

Mechanical data	
Solder pin arrangement	within the terminal block (in-line)
Number of solder pins per potential	2
Solder pin length	4 mm
Solder pin dimensions	1 x 0.8 mm
Drilled hole diameter	1.4 $^{(+0.1)}$ mm

Environmental requirements	
Limit temperature range	-60 … +105 °C

Ferrule	Page 1081
Marking	Page 1064
Test and measurement	Page 1088
Tool	Page 1072
See technical section for further information	
Approvals and corresponding ratings, visit www.wago.com	

Stackable PCB terminal block ▸ 742 Series

Commoning option ▸ CAGE CLAMP® ▸ Actuation type: Operating tool ▸ 2.5 mm² ▸ Pin spacing: 5 mm / 0.197 inches

Conductor connection direction to PCB: 60 ° ▸ Number of connection points: 1 ▸ Strip length: 8 … 9 mm / 0.31 … 0.35 inches



742-121

Color	Item No.	PU
gray	**742-121**	300
blue	**742-124**	300
green-yellow	**742-128**	300

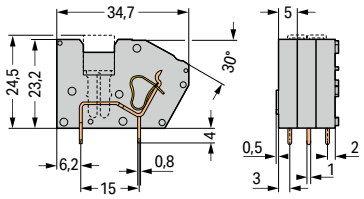

Item-Specific Accessories



End plate; Width: 1.5 mm; snap-on type

Color	Item No.	PU (SPU)
gray	**742-100**	300 (100)
blue	**742-400**	300 (100)
green-yellow	**742-800**	300 (100)

Conductor connection direction to PCB: 90 ° ▸ Number of connection points: 2 ▸ Strip length: 6 … 7 mm / 0.24 … 0.28 inches

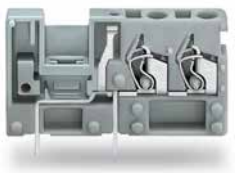

742-171

Color	Item No.	PU
gray	**742-171**	200
blue	**742-174**	200
green-yellow	**742-178**	200

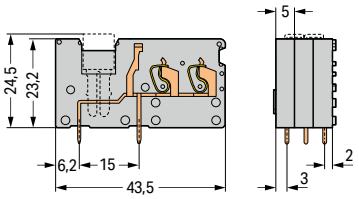

Item-Specific Accessories



End plate; Width: 1.5 mm; snap-on type

Color	Item No.	PU (SPU)
gray	**742-150**	300 (100)
blue	**742-450**	300 (100)
green-yellow	**742-850**	300 (100)

Accessories; for all products on this page



Adjacent jumper; Width: 5 mm; Rated current: 24 A

Color	Item No.	PU
gray	**280-402**	25

PU = packaging unit; SPU = subpackaging unit; Dimensions in mm

Stackable PCB terminal block ▸ 742 Series

Commoning option ▸ CAGE CLAMP® ▸ Actuation type: Operating tool ▸ 2.5 mm² ▸ Pin spacing: 5.08 mm / 0.2 inches ▸ Color: orange

1



- Modular PCB terminal blocks with screwdriver-actuated CAGE CLAMP® connection
- Adjacent jumpers for multiplying and distributing potentials
- Disconnect and fuse PCB terminal blocks can be combined to form complex function assemblies
- Test socket for 2.0 mm and 2.3 mm Ø test plugs

Electrical data						
Pin spacing	**5.08 mm / 0.2 inches**			**5.08 mm / 0.2 inches**		
Number of connection points	**1**			**2**		
Ratings per	**IEC/EN 60664-1**			**IEC/EN 60664-1**		
Overvoltage category	III	III	II	III	III	II
Pollution degree	3	2	2	3	2	2
Nominal voltage	250 V	320 V	630 V	320 V	320 V	630 V
Rated impulse withstand voltage	4 kV	4 kV	4 kV	4 kV	4 kV	4 kV
Rated current	16 A	16 A	16 A	16 A	16 A	16 A
Approvals per	**UL 1059**			**UL 1059**		
Use group	B	C	D	B	C	D
Rated voltage	300 V	-	300 V	300 V	-	300 V
Rated current	10 A	-	10 A	10 A	-	10 A
Approvals per	**CSA**			**CSA**		
Use group	B	C	D	B	C	D
Rated voltage	300 V	-	300 V	300 V	-	300 V
Rated current	16 A	-	10 A	10 A	-	10 A

Connection Data	
Connection technology	CAGE CLAMP®
Solid conductor	0.08 … 2.5 mm² / 28 … 12 AWG
Fine-stranded conductor	0.08 … 2.5 mm² / 28 … 12 AWG
Fine-stranded conductor; with insulated ferrule	0.25 … 1.5 mm²
Fine-stranded conductor; with uninsulated ferrule	0.25 … 1.5 mm²
Note (conductor cross-section)	12 AWG: THHN, THWN

Material data	
Material group	I
Insulation material (main housing)	Polyamide (PA66)
Flammability class per UL94	V0
Clamping spring material	Chrome-nickel spring steel (CrNi)
Contact material	Electrolytic copper (E_{Cu})
Contact Plating	Tin

Mechanical data	
Solder pin arrangement	within the terminal block (in-line)
Number of solder pins per potential	2
Solder pin length	4 mm
Solder pin dimensions	1 x 0.8 mm
Drilled hole diameter	1.4 $^{(+0.1)}$ mm

Environmental requirements	
Limit temperature range	-60 … +105 °C

Ferrule	Page 1081
Marking	Page 1064
Test and measurement	Page 1088
Tool	Page 1072
See technical section for further information	
Approvals and corresponding ratings, visit www.wago.com	

Stackable PCB terminal block ▸ 742 Series

Commoning option ▸ CAGE CLAMP® ▸ Actuation type: Operating tool ▸ 2.5 mm² ▸ Pin spacing: 5.08 mm / 0.2 inches ▸ Color: orange

Conductor connection direction to PCB: 60 ° ▸ Number of connection points: 1 ▸ Strip length: 8 … 9 mm / 0.31 … 0.35 inches



742-126

Color	Pole number	Item No.	PU
orange	1	742-126	300

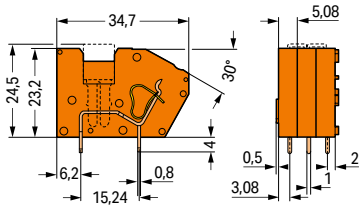

Item-Specific Accessories



End plate; Width: 1.5 mm; snap-on type

Color	Item No.	PU (SPU)
orange	742-600	300 (100)

Conductor connection direction to PCB: 90 ° ▸ Number of connection points: 2 ▸ Strip length: 6 … 7 mm / 0.24 … 0.28 inches



742-176

Color	Pole number	Item No.	PU
orange	1	742-176	200

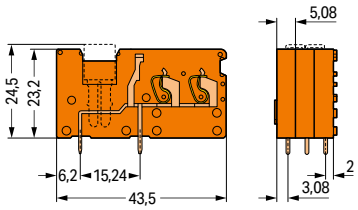

Item-Specific Accessories



End plate; Width: 1.5 mm; snap-on type

Color	Item No.	PU (SPU)
orange	742-650	300 (100)

Accessories; for all products on this page



Adjacent jumper; Width: 5 mm; Rated current: 24 A

Color	Item No.	PU
gray	280-402	25

PU = packaging unit; SPU = subpackaging unit; Dimensions in mm

Stackable PCB terminal block ▸ 742 Series

Fuse terminal block ▸ CAGE CLAMP® ▸ Actuation type: Operating tool ▸ 2.5 mm² ▸ Pin spacing: 5 mm / 0.197 inches ▸ Color: gray

1



- Modular PCB terminal blocks with screwdriver-actuated CAGE CLAMP® connection
- Quick, easy replacement of mini-automotive blade-style fuses in the event of a fault
- Test sockets on both sides of fuse for 2.0 mm or 2.3 mm Ø test plugs
- Observe protection against direct contact for voltages of 42 V and higher!
- 2- and 3-conductor PCB terminal blocks for distributing potentials independently of PCB

Electrical data						
Pin spacing	**5 mm / 0.197 inches**			**5 mm / 0.197 inches**		
Number of connection points	**1**			**2; 3**		
Ratings	**Individual arrangement**			**Individual arrangement**		
Ratings per	IEC/EN 60664-1			IEC/EN 60664-1		
Overvoltage category	III	III	II	III	III	II
Pollution degree	3	2	2	3	2	2
Nominal voltage	320 V	320 V	630 V	320 V	320 V	630 V
Rated impulse withstand voltage	4 kV	4 kV	4 kV	4 kV	4 kV	4 kV
Rated current	15 A	15 A	15 A	15 A	15 A	15 A
Ratings	**Block arrangement**			**Block arrangement**		
Ratings per	IEC/EN 60664-1			IEC/EN 60664-1		
Overvoltage category	III	III	II	III	III	II
Pollution degree	3	2	2	3	2	2
Nominal voltage	320 V	320 V	630 V	320 V	320 V	630 V
Rated impulse withstand voltage	4 kV	4 kV	4 kV	4 kV	4 kV	4 kV
Rated current	10 A	10 A	10 A	10 A	10 A	10 A
Approvals per	**UL 1059**			**UL 1059**		
Use group	B	C	D	B	C	D
Rated voltage	300 V	-	300 V	300 V	-	300 V
Rated current	10 A	-	10 A	10 A	-	10 A
Approvals per	**CSA**			**CSA**		
Use group	B	C	D	B	C	D
Rated voltage	300 V	-	300 V	300 V	-	300 V
Rated current	16 A	-	10 A	10 A	-	10 A

Connection Data	
Connection technology	CAGE CLAMP®
Solid conductor	0.08 … 2.5 mm² / 28 … 12 AWG
Fine-stranded conductor	0.08 … 2.5 mm² / 28 … 12 AWG
Fine-stranded conductor; with insulated ferrule	0.25 … 1.5 mm²
Fine-stranded conductor; with uninsulated ferrule	0.25 … 1.5 mm²
Note (conductor cross-section)	12 AWG: THHN, THWN

Material data	
Material group	I
Insulation material (main housing)	Polyamide (PA66)
Flammability class per UL94	V0
Clamping spring material	Chrome-nickel spring steel (CrNi)
Contact material	Electrolytic copper (E_{Cu})
Contact Plating	Tin

Mechanical data	
Solder pin arrangement	within the terminal block (in-line)
Number of solder pins per potential	2
Solder pin length	4 mm
Solder pin dimensions	1 x 0.8 mm
Drilled hole diameter	1.4 $^{(+0.1)}$ mm

Environmental requirements	
Limit temperature range	-60 … +105 °C

Ferrule	Page 1081
Marking	Page 1064
Test and measurement	Page 1088
Tool	Page 1072
See technical section for further information	
Approvals and corresponding ratings, visit www.wago.com	

Stackable PCB terminal block ▸ 742 Series

Fuse terminal block ▸ CAGE CLAMP® ▸ Actuation type: Operating tool ▸ 2.5 mm² ▸ Pin spacing: 5 mm / 0.197 inches ▸ Color: gray

Conductor connection direction to PCB: 60 ° ▸ Number of connection points: 1 ▸ Strip length: 8 … 9 mm / 0.31 … 0.35 inches



742-111

Color	Pole number	Item No.	PU
gray	1	742-111	300

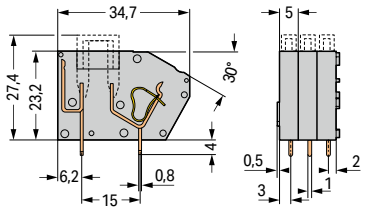

Item-Specific Accessories



End plate; Width: 1.5 mm; snap-on type

Color	Item No.	PU (SPU)
gray	742-100	300 (100)

Conductor connection direction to PCB: 90 ° ▸ Number of connection points: 2 ▸ Strip length: 6 … 7 mm / 0.24 … 0.28 inches

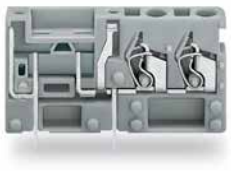

742-161

Color	Pole number	Item No.	PU
gray	1	742-161	200

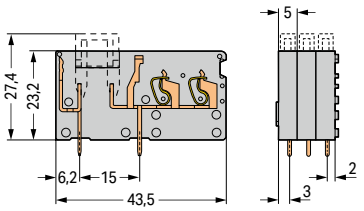

Item-Specific Accessories



End plate; Width: 1.5 mm; snap-on type

Color	Item No.	PU (SPU)
gray	742-150	300 (100)

Conductor connection direction to PCB: 90 ° ▸ Number of connection points: 3 ▸ Strip length: 6 … 7 mm / 0.24 … 0.28 inches

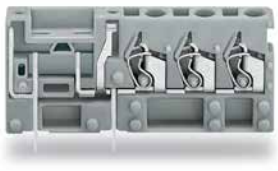

742-163

Color	Pole number	Item No.	PU
gray	1	742-163	100

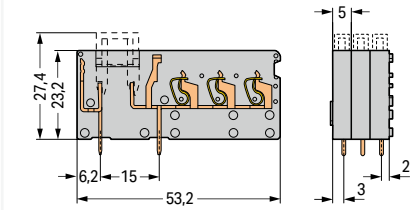

Item-Specific Accessories



End plate; Width: 1.5 mm; snap-on type

Color	Item No.	PU (SPU)
gray	742-152	300 (100)

PU = packaging unit; SPU = subpackaging unit; Dimensions in mm

Stackable PCB terminal block ▸ 742 Series

Fuse terminal block ▸ CAGE CLAMP® ▸ Actuation type: Operating tool ▸ 2.5 mm² ▸ Pin spacing: 5.08 mm / 0.2 inches ▸ Color: orange

1



- Modular PCB terminal blocks with screwdriver-actuated CAGE CLAMP® connection
- Quick, easy replacement of mini-automotive blade-style fuses in the event of a fault
- Test sockets on both sides of fuse for 2.0 mm or 2.3 mm Ø test plugs
- Observe protection against direct contact for voltages of 42 V and higher!
- 2- and 3-conductor PCB terminal blocks for distributing potentials independently of PCB

Electrical data						
Pin spacing	**5.08 mm / 0.2 inches**			**5.08 mm / 0.2 inches**		
Number of connection points	**1**			**2; 3**		
Ratings	**Individual arrangement**			**Individual arrangement**		
Ratings per	IEC/EN 60664-1			IEC/EN 60664-1		
Overvoltage category	III	III	II	III	III	II
Pollution degree	3	2	2	3	2	2
Nominal voltage	320 V	320 V	630 V	320 V	320 V	630 V
Rated impulse withstand voltage	4 kV	4 kV	4 kV	4 kV	4 kV	4 kV
Rated current	15 A	15 A	15 A	15 A	15 A	15 A
Ratings	**Block arrangement**			**Block arrangement**		
Ratings per	IEC/EN 60664-1			IEC/EN 60664-1		
Overvoltage category	III	III	II	III	III	II
Pollution degree	3	2	2	3	2	2
Nominal voltage	320 V	320 V	630 V	320 V	320 V	630 V
Rated impulse withstand voltage	4 kV	4 kV	4 kV	4 kV	4 kV	4 kV
Rated current	10 A	10 A	10 A	10 A	10 A	10 A
Approvals per	**UL 1059**			**UL 1059**		
Use group	B	C	D	B	C	D
Rated voltage	300 V	-	300 V	300 V	-	300 V
Rated current	10 A	-	10 A	10 A	-	10 A
Approvals per	**CSA**			**CSA**		
Use group	B	C	D	B	C	D
Rated voltage	300 V	-	300 V	300 V	-	300 V
Rated current	16 A	-	10 A	10 A	-	10 A

Connection Data	
Connection technology	CAGE CLAMP®
Solid conductor	0.08 … 2.5 mm² / 28 … 12 AWG
Fine-stranded conductor	0.08 … 2.5 mm² / 28 … 12 AWG
Fine-stranded conductor; with insulated ferrule	0.25 … 1.5 mm²
Fine-stranded conductor; with uninsulated ferrule	0.25 … 1.5 mm²
Note (conductor cross-section)	12 AWG: THHN, THWN

Material data	
Material group	I
Insulation material (main housing)	Polyamide (PA66)
Flammability class per UL94	V0
Clamping spring material	Chrome-nickel spring steel (CrNi)
Contact material	Electrolytic copper (E_{Cu})
Contact Plating	Tin

Mechanical data	
Solder pin arrangement	within the terminal block (in-line)
Number of solder pins per potential	2
Solder pin length	4 mm
Solder pin dimensions	1 x 0.8 mm
Drilled hole diameter	1.4 $^{(+0.1)}$ mm

Environmental requirements	
Limit temperature range	-60 … +105 °C

Ferrule	Page 1081
Marking	Page 1064
Test and measurement	Page 1088
Tool	Page 1072
See technical section for further information	
Approvals and corresponding ratings, visit www.wago.com	

Stackable PCB terminal block ▸ 742 Series

Fuse terminal block ▸ CAGE CLAMP® ▸ Actuation type: Operating tool ▸ 2.5 mm² ▸ Pin spacing: 5.08 mm / 0.2 inches ▸ Color: orange

1

Conductor connection direction to PCB: 60 ° ▸ Number of connection points: 1 ▸ Strip length: 8 … 9 mm / 0.31 … 0.35 inches



742-116

Color	Pole number	Item No.	PU
orange	1	742-116	300

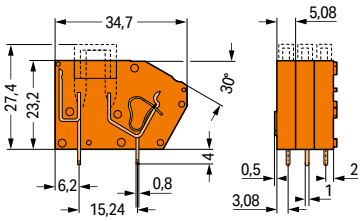

Item-Specific Accessories



End plate; Width: 1.5 mm; snap-on type

Color	Item No.	PU (SPU)
orange	742-600	300 (100)

Conductor connection direction to PCB: 90 ° ▸ Number of connection points: 2 ▸ Strip length: 6 … 7 mm / 0.24 … 0.28 inches



742-166

Color	Pole number	Item No.	PU
orange	1	742-166	200

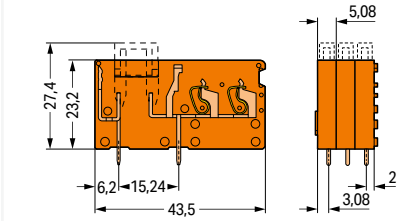

Item-Specific Accessories



End plate; Width: 1.5 mm; snap-on type

Color	Item No.	PU (SPU)
orange	742-650	300 (100)

Conductor connection direction to PCB: 90 ° ▸ Number of connection points: 3 ▸ Strip length: 6 … 7 mm / 0.24 … 0.28 inches

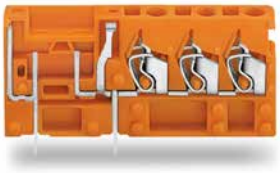

742-168

Color	Pole number	Item No.	PU
orange	1	742-168	100

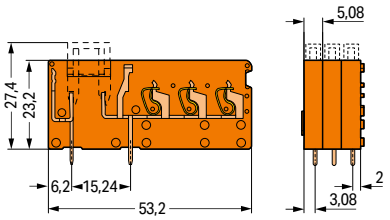

Item-Specific Accessories



End plate; Width: 1.5 mm; snap-on type

Color	Item No.	PU (SPU)
orange	742-651	300 (100)

PU = packaging unit; SPU = subpackaging unit; Dimensions in mm

Jumper ▸ Comb-style jumper bar

Suitable for 745 Series (4 mm²)



745-184

Pin spacing 5 mm / 0.197 inches		
Jumper assignment	**Item No.**	PU (SPU)
1-2	**745-182**	250 (50)
1-2-3	**745-183**	250 (50)
1-2-3-4	**745-184**	200 (50)
1-2-3-4-5	**745-185**	200 (50)
1-2-3-4-5-6-7-8-9-10	**745-180**	200 (50)
1-3	**745-181**	250 (50)

Pin spacing 7.5 mm / 0.295 inches		
Jumper assignment	**Item No.**	PU (SPU)
1-2	**745-192**	250 (50)
1-2-3	**745-193**	250 (50)
1-2-3-4	**745-194**	200 (50)
1-2-3-4-5	**745-195**	200 (50)
1-2-3-4-5-6-7-8-9-10	**745-190**	200 (50)
1-3	**745-191**	250 (50)

Pin spacing 10 mm / 0.394 inches		
Jumper assignment	**Item No.**	PU (SPU)
1-2-3	**745-283**	250 (50)
1-2-3-4	**745-284**	200 (50)
1-2-3-4-5	**745-285**	200 (50)
1-2-3-4-5-6-7-8-9-10	**745-280**	150 (50)
1-3	**745-281**	250 (50)

Suitable for 745 Series (6 mm²) and 2706 Series



745-382

Pin spacing 7.5 mm / 0.295 inches		
Jumper assignment	**Item No.**	PU (SPU)
1-2	**745-382**	250 (50)
1-2-3	**745-383**	250 (50)
1-2-3-4	**745-384**	200 (50)
1-2-3-4-5	**745-385**	200 (50)
1-2-3-4-5-6-7-8-9-10	**745-380**	200 (50)
1-3	**745-381**	250 (50)

Pin spacing 10 mm / 0.394 inches		
Jumper assignment	**Item No.**	PU (SPU)
1-2	**745-392**	250 (50)
1-2-3	**745-393**	250 (50)
1-2-3-4	**745-394**	200 (50)
1-2-3-4-5	**745-395**	200 (50)
1-2-3-4-5-6-7-8-9-10	**745-390**	200 (50)
1-3	**745-391**	250 (50)

Suitable for 745 Series (16 mm²) and 2716 Series



745-585

Pin spacing 10 mm / 0.394 inches		
Jumper assignment	**Item No.**	PU (SPU)
1-2	**745-582**	400 (50)
1-2-3	**745-583**	300 (50)
1-2-3-4	**745-584**	200 (50)
1-2-3-4-5	**745-585**	200 (50)

Pin spacing 15 mm / 0.591 inches		
Jumper assignment	**Item No.**	PU (SPU)
1-2	**745-632**	200 (50)
1-2-3	**745-633**	200 (50)
1-2-3-4	**745-634**	200 (50)
1-2-3-4-5	**745-635**	200 (50)
1-3	**745-631**	200 (50)

Pin spacing 20 mm / 0.787 inches		
Jumper assignment	**Item No.**	PU (SPU)
1-2	**745-682**	400 (50)
1-2-3	**745-683**	200 (50)
1-2-3-4	**745-684**	200 (50)
1-2-3-4-5	**745-685**	200 (50)
1-3	**745-681**	300 (50)

PU = packaging unit; SPU = subpackaging unit

Jumper ▸ Comb-style jumper bar



Inserting a comb-style jumper bar.



To insert a comb-style jumper bar, push it down using a screwdriver until it hits the backstop – 745 Series.

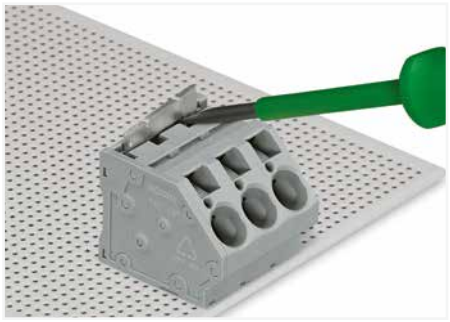

To remove the jumper bar, lift it up using a screwdriver – 745 Series.

Testing accessories ▸ Test plug adapter ▸ Suitable for PCB terminal blocks (255, 256, 257 Series); with socket for 2 mm and 2.3 mm Ø test plugs

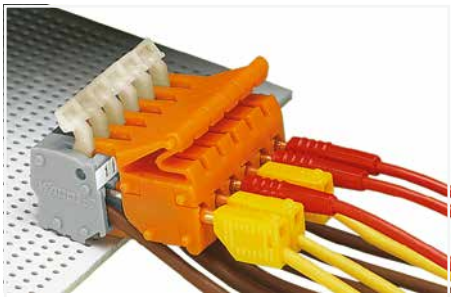

Electrical data			
Ratings per	**IEC/EN 60664-1**		
Overvoltage category	III	III	II
Pollution degree	3	2	2
Nominal voltage	-	320 V	-
Rated impulse withstand voltage	-	4 kV	-
Rated current	-	6 A	-

Material data	
Material group	I
Insulation material (main housing)	Polyamide (PA66)
Flammability class per UL94	V0

Environmental requirements	
Limit temperature range	-60 … +105 °C

See technical section for further information

Approvals and corresponding ratings, visit www.wago.com

Testing accessories ▸ Test plug adapter ▸ Suitable for PCB terminal blocks (255, 256, 257 Series); with socket for 2 mm and 2.3 mm Ø test plugs



249-110

Pin spacing: 5 mm / 0.197 inches		
Color	**Item No.**	PU (SPU)
gray	**249-110**	100 (25)

Pin spacing: 7.5 mm / 0.295 inches		
Color	**Item No.**	PU (SPU)
gray	**249-112**	100 (25)

Pin spacing: 10 mm / 0.394 inches		
Color	**Item No.**	PU (SPU)
gray	**249-114**	100 (25)

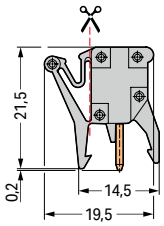

Cutting mark for separating the retaining clip and its snap-in mounting foot

Adapters with snap-in mounting foot cut off assembled on both ends (7 to 9 poles)

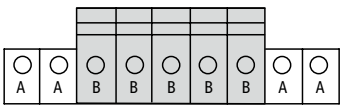

Adapters with snap-in mounting foot cut off in center position (10 to 15 poles)

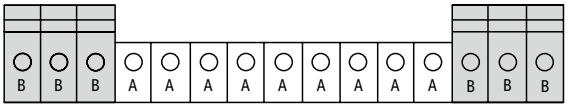

For lengths longer than 7 poles, the snap-in mounting foot with retaining clip should be cut off (see example below).

Adapters A:
Snap-in mounting foot with retaining clip cut off

Adapters B:
Standard version

PU = packaging unit; SPU = subpackaging unit; Dimensions in mm

Testing accessories ▸ Test plug adapter ▸ Suitable for PCB terminal blocks (255, 256, 257 Series); with socket for 2 mm and 2.3 mm Ø test plugs



249-111

Pin spacing: 5.08 mm / 0.2 inches		
Color	**Item No.**	PU (SPU)
orange	**249-111**	100 (25)
Pin spacing: 7.62 mm / 0.3 inches		
Color	**Item No.**	PU (SPU)
orange	**249-113**	100 (25)
Pin spacing: 10.16 mm / 0.4 inches		
Color	**Item No.**	PU (SPU)
orange	**249-115**	100 (25)

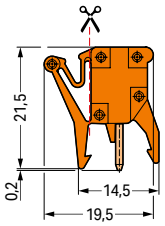

Cutting mark for separating the retaining clip and its snap-in mounting foot

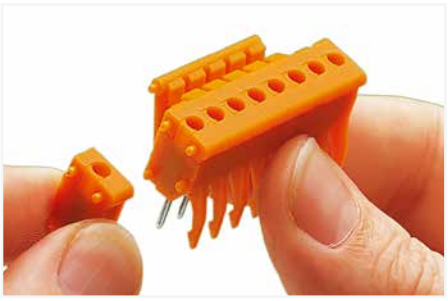

Assembling a multipole test plug adapter.

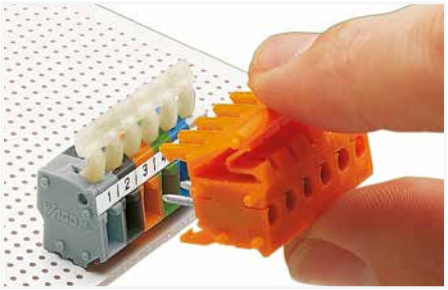

Inserting a test plug adapter into a terminal strip.

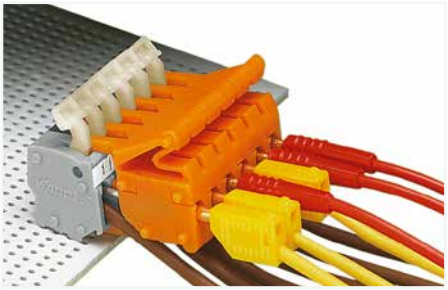

Testing wired terminal blocks.

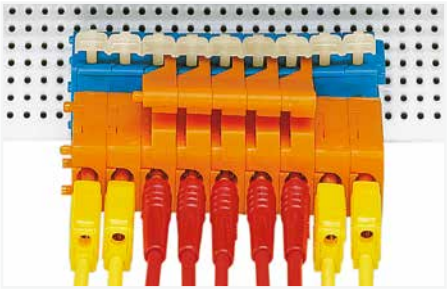

9-pole test plug adapter – external snap-in mounting feet with retaining clips cut off

Adapters with snap-in mounting foot cut off assembled on both ends (7 to 9 poles)

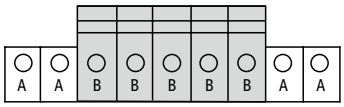

Adapters with snap-in mounting foot cut off in center position (10 to 15 poles)

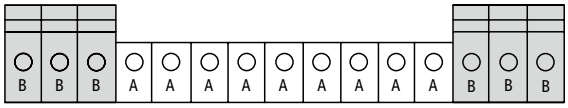

For lengths longer than 7 poles, the snap-in mounting foot with retaining clip should be cut off (see example below).

Adapters A:
Snap-in mounting foot with retaining clip cut off

Adapters B:
Standard version

PU = packaging unit; SPU = subpackaging unit; Dimensions in mm

Testing accessories ▸ Test plug module ▸ Contact type: A ▸ Testing without connected conductor

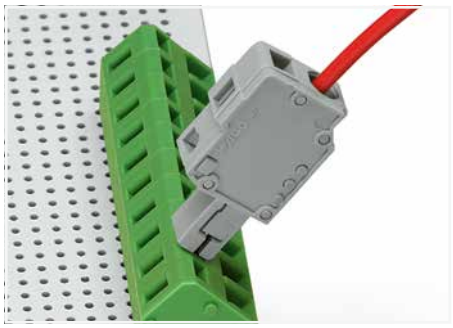

Electrical data				
Ratings per	**IEC/EN 60664-1**			
Overvoltage category	III	III	II	
Pollution degree	3	2	2	
Nominal voltage	-	250 V	-	
Rated impulse withstand voltage	-	2.5 kV	-	
Rated current	-	0.5 A	-	

Connection Data	
Connection technology	CAGE CLAMP®
Strip length	12 … 13 mm / 0.47 … 0.51 inches
Solid conductor	0.08 … 2.5 mm² / 28 … 12 AWG
Fine-stranded conductor	0.08 … 2.5 mm² / 28 … 12 AWG

Material data	
Material group	I
Insulation material (main housing)	Polyamide (PA66)
Flammability class per UL94	V0
Clamping spring material	Chrome-nickel spring steel (CrNi)
Contact material	Electrolytic copper (E_{Cu})
Contact Plating	Tin

Environmental requirements	
Limit temperature range	-60 … +105 °C
Processing temperature	-35 … +60 °C

Tool Page 637

See technical section for further information

Approvals and corresponding ratings, visit www.wago.com

Testing accessories ▸ Test plug module ▸ Contact type: A ▸ Testing without connected conductor

Test contact length: 10 mm ▸ Suitable for 236 Series



231-127

Pin spacing: 5 mm / 0.197 inches

Color	Item No.	PU
gray	231-127	100

Pin spacing: 7.5 mm / 0.295 inches

Color	Item No.	PU
gray	231-161	100

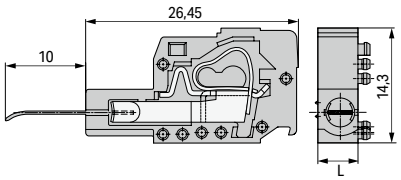

L = pin spacing

Item-Specific Accessories



End plate; Width: 1.5 mm; snap-on type

Color	Item No.	PU (SPU)
gray	231-100	200 (100)



231-128

Pin spacing: 5.08 mm / 0.2 inches

Color	Item No.	PU
orange	231-128	100

Pin spacing: 7.62 mm / 0.3 inches

Color	Item No.	PU
orange	231-125	100

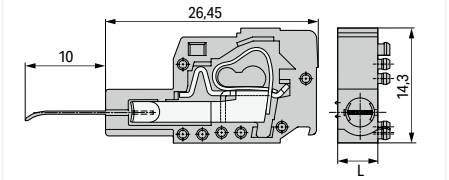

L = pin spacing

Item-Specific Accessories



End plate; Width: 1.5 mm; snap-on type

Color	Item No.	PU (SPU)
orange	231-300	200 (100)

PU = packaging unit; SPU = subpackaging unit; Dimensions in mm

Testing accessories ▸ Test plug module ▸ Contact type: A ▸ Testing without connected conductor

Test contact length: 17 mm ▸ Suitable for 280, 736, 737, 738, 780 Series

1

Pin spacing: 5 mm / 0.197 inches



231-126

Color	Item No.	PU
gray	231-126	100

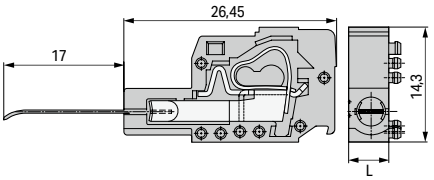

L = pin spacing

Item-Specific Accessories



End plate; Width: 1.5 mm; snap-on type

Color	Item No.	PU (SPU)
gray	231-100	200 (100)

Pin spacing: 5.08 mm / 0.2 inches

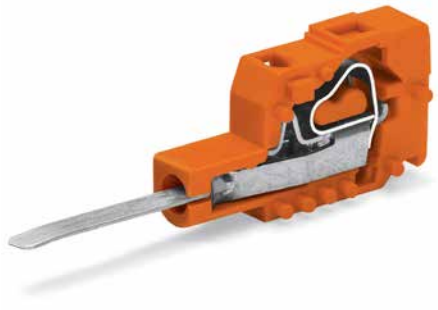

231-426

Color	Item No.	PU
orange	231-426	100

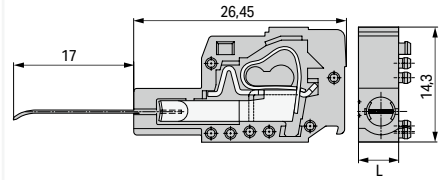

L = pin spacing

Item-Specific Accessories



End plate; Width: 1.5 mm; snap-on type

Color	Item No.	PU (SPU)
orange	231-300	200 (100)

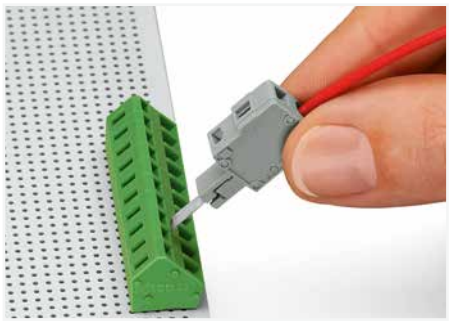

Inserting a test plug module into the operating slot.

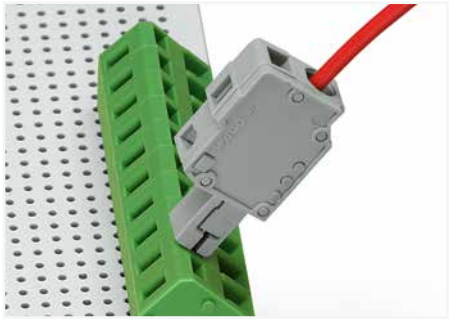

Unwired terminal strip with inserted test plug module



Contact type A:
Testing only when unwired.

PU = packaging unit; SPU = subpackaging unit; Dimensions in mm

Testing accessories ▸ Test plug module ▸ Contact type: B ▸ Test contact length: 18 mm ▸ Testing wired terminal blocks with 0.75 …1.5 mm² “f-st” or 0.5 mm² “sol.” conductors

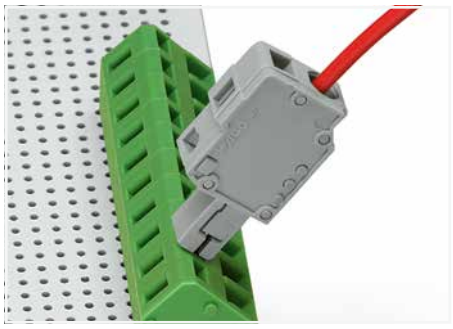

Electrical data				
Ratings per	**IEC/EN 60664-1**			
Overvoltage category	III	III	II	
Pollution degree	3	2	2	
Nominal voltage	-	250 V	-	
Rated impulse withstand voltage	-	2.5 kV	-	
Rated current	-	0.5 A	-	
Connection Data				
Connection technology	CAGE CLAMP®			
Strip length	12 … 13 mm / 0.47 … 0.51 inches			
Solid conductor	0.08 … 2.5 mm² / 28 … 12 AWG			
Fine-stranded conductor	0.08 … 2.5 mm² / 28 … 12 AWG			
Material data				
Material group	I			
Insulation material (main housing)	Polyamide (PA66)			
Flammability class per UL94	V0			
Clamping spring material	Chrome-nickel spring steel (CrNi)			
Contact material	Electrolytic copper (E_{Cu})			
Contact Plating	Tin			
Mechanical data				
Test contact length	18 mm			
Environmental requirements				
Limit temperature range	-60 … +105 °C			

Tool Page 1072

See technical section for further information

Approvals and corresponding ratings, visit www.wago.com

Testing accessories ▸ Test plug module ▸ Contact type: B ▸ Test contact length: 18 mm ▸ Testing wired terminal blocks with 0.75 …1.5 mm² “f-st” or 0.5 mm² “sol.” conductors

Suitable for 280, 736, 737, 738, 780 Series ▸ Pin spacing: 5 mm / 0.197 inches



231-155

Color	Item No.	PU
gray	231-155	100

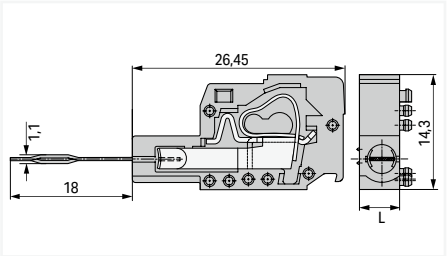

L = pin spacing

Item-Specific Accessories



End plate; Width: 1.5 mm; snap-on type

Color	Item No.	PU (SPU)
gray	231-100	200 (100)

Suitable for 736, 737 Series ▸ Pin spacing: 7.5 mm / 0.295 inches

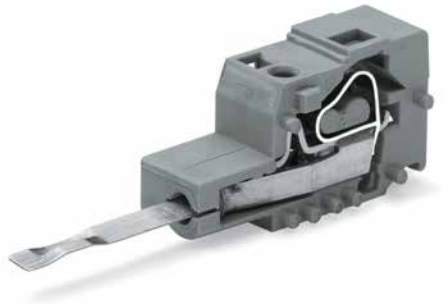

231-456

Color	Item No.	PU
gray	231-456	100

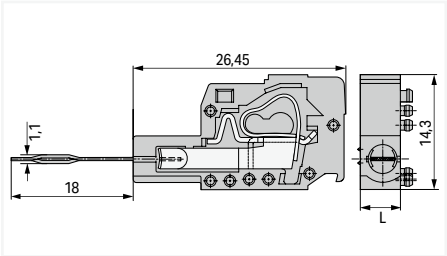

L = pin spacing

Item-Specific Accessories



End plate; Width: 1.5 mm; snap-on type

Color	Item No.	PU (SPU)
gray	231-100	200 (100)

Suitable for 736, 737, 738 Series ▸ Pin spacing: 5.08 mm / 0.2 inches



231-455

Color	Item No.	PU
orange	231-455	100

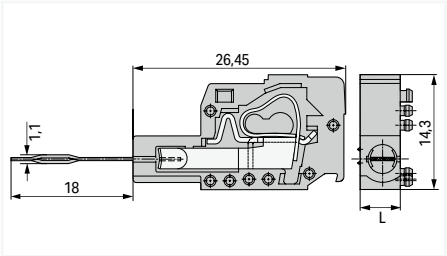

L = pin spacing

Item-Specific Accessories



End plate; Width: 1.5 mm; snap-on type

Color	Item No.	PU (SPU)
orange	231-300	200 (100)

PU = packaging unit; SPU = subpackaging unit; Dimensions in mm

Testing accessories ▸ Test plug module ▸ Contact type: B ▸ Test contact length: 18 mm ▸ Testing wired terminal blocks with 0.75 …1.5 mm² “f-st” or 0.5 mm² “sol.” conductors

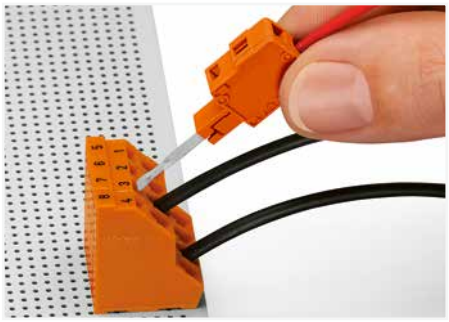

Inserting a test plug module into the operating slot.

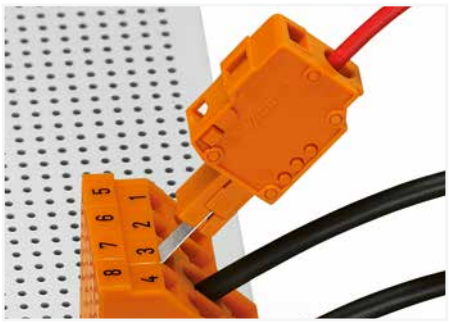

Wired terminal strip with inserted test plug module



Contact type B:
Testing only when wired –
0.75 … 1.5 mm² “f-st” or 0.5 mm2 “sol.”

Commoning Strips for PCB Terminal Strips 236, 255, 256, 257, 736, 737 and 738 Series



Horizontal commoning:
Connect adjacent potentials, e.g., as:
- "–" strip in connection modules for actuators with higher switching power
- Ground commoning strip for applications where the ground conductor shall not be looped over PCB tracks (max. short-time withstand current: 70 A/mm² for one second – observe the normative requirements of the end application!)

Note: Interruption of horizontal commoning reduces spacing to the adjacent solder pins.

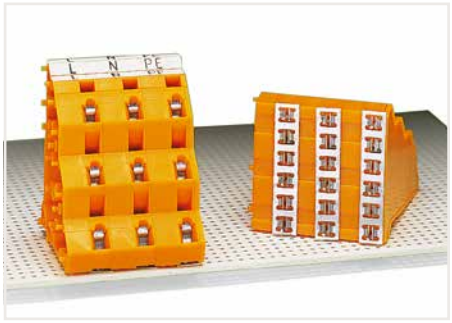

Vertical commoning (only for 736 and 737 Series starting from 7.5 mm/0.295 inch pin spacing):
Connect the (in-line) solder pins of a PCB terminal block to one potential, e.g., as:
- 3-conductor supply and distribution PCB terminal block (up to 10 A)
- Intelligent circuit modifications without changing the track layout are also possible.

WAGO's commoning strips allow PCB terminal strips to be commoned to suit customer requirements. Due to the many combination possibilities, the commoning strips can only be fitted onto the solder pins at the factory. Please refer to the order form on pages 1.70 and 1.71.

Furthermore, these commoning strips allow terminal blocks of a same potential to be created.

Commoning strips are available for the following pin spacing:
- 5 mm, 5.08 mm (up to 20 poles)
- 7.5 mm, 7.62 mm (up to 16 poles)
- 10 mm, 10.16 mm (up to 12 poles)

A spacer provides height compensation for the solder pins that are not commoned.

Technical Information on "Commoned PCB Terminal Strips"

Use of commoning strips must account for both the specific conditions of the planned application, as well as relevant standards for the normal operating conditions in which operational failures (can) occur.

Horizontal commoning (236, 255, 256, 257, 736, 737, 738 Series)

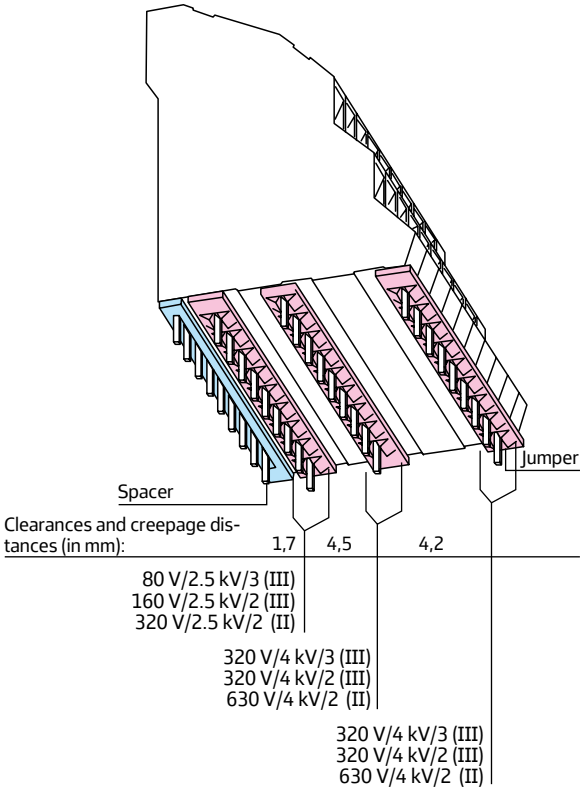

- Pin spacing combination is only possible with 5 mm, 5.08 mm, 10 mm and 10.16 mm.
- In-line or staggered arrangement of solder pins (736, 737, 738 Series).
- 236 Series: Versions with only one solder pin cannot be commoned.
- In case of different potentials within one level, ensure that at least one interim terminal block must remain uncommoned in order to maintain the necessary creepage distances and clearances (see also the ordering example).

Distances to adjacent potentials

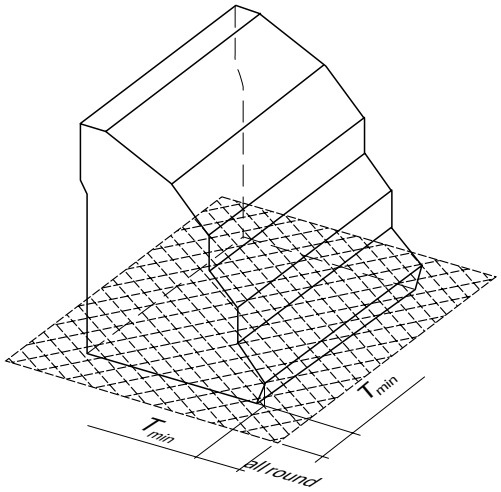

Recommendation: T_{min} = 5 mm

Please note that the distance between the commoning strips and adjacent potentials must comply with requirements for the end application as specified in the relevant standard.

Vertical commoning (only possible with 736/737 Series Multilevel PCB Terminal Blocks)

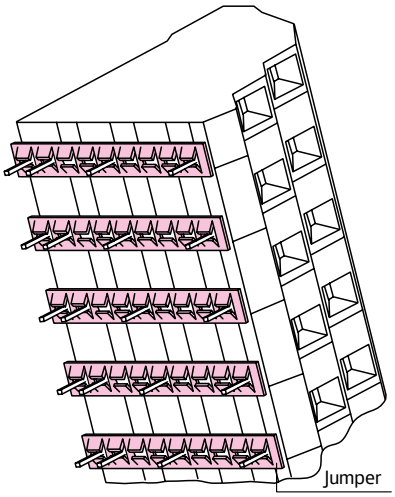

Pin spacing: 7.5 mm, 7.62 mm	Creepage distance (in mm):	Clearance (in mm):	Voltage:
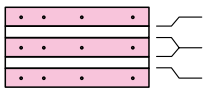	1,7 1,7	1,7 1,7	80 V/2.5 kV/3 (III) 160 V/2.5 kV/2 (III) 320 V/2.5 kV/2 (II)

Pin spacing: 10 mm, 10.16 mm	Creepage distance (in mm):	Clearance (in mm):	Voltage:
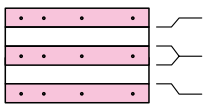	4,2 4,2	4,2 4,2	320 V/4 kV/3 (III) 320 V/4 kV/2 (III) 630 V/4 kV/2 (II)

- Not possible with 5 mm and 5.08 mm pin spacing
- Solder pins always arranged in line

Order Form "Commoned PCB Terminal Strips"

236, 255, 256, 257, 736
737, 738 Series

Company:

Drawing No.:

WAGO Item No.:

Change				
	5			
	4			
	3			
	2			
	1			
Original		Change Note	Date	Name

Page of

Release Note:

1

Ordering example: Horizontal commoning

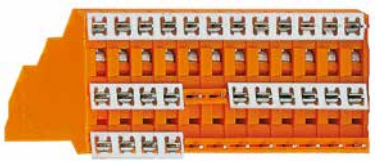

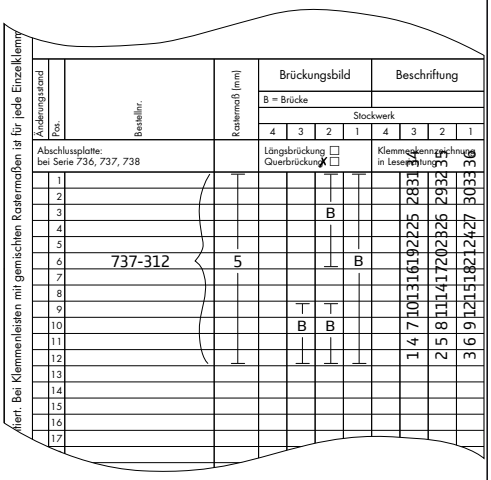

Ordering example: Vertical commoning



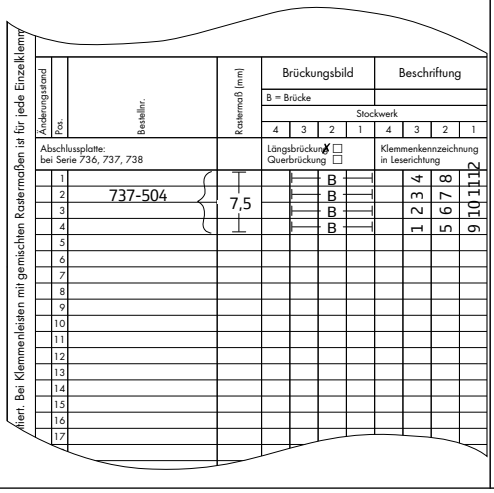

Spacers are always installed at the factory. For mixed-pin-spacing terminal strips, enter the pin spacing, not the item number of each individual terminal block.

Terminal strip design

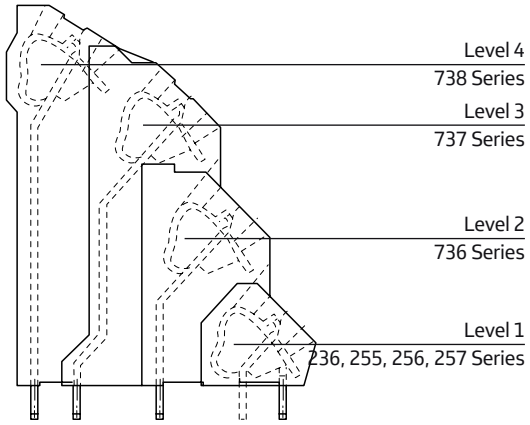

Item Changed	Item Position	Item No.	Pin Spacing (mm)	Commoning B = Jumper Level 4	3	2	1	Marking Level 4	3	2	1
		End plate: marking for 736, 737, 738 Series		Vertical commoning ☐ Horizontal commoning ☐				Terminal block in read direction			
	1										
	2										
	3										
	4										
	5										
	6										
	7										
	8										
	9										
	10										
	11										
	12										
	13										
	14										
	15										
	16										
	17										
	18										
	19										
	20										
	21										
	22										
	23										
	24										
	25										
	26										
	27										
	28										
	29										
	30										
	31										
	32										
	33										
End plate: for 236, 255, 256, 257 Series											

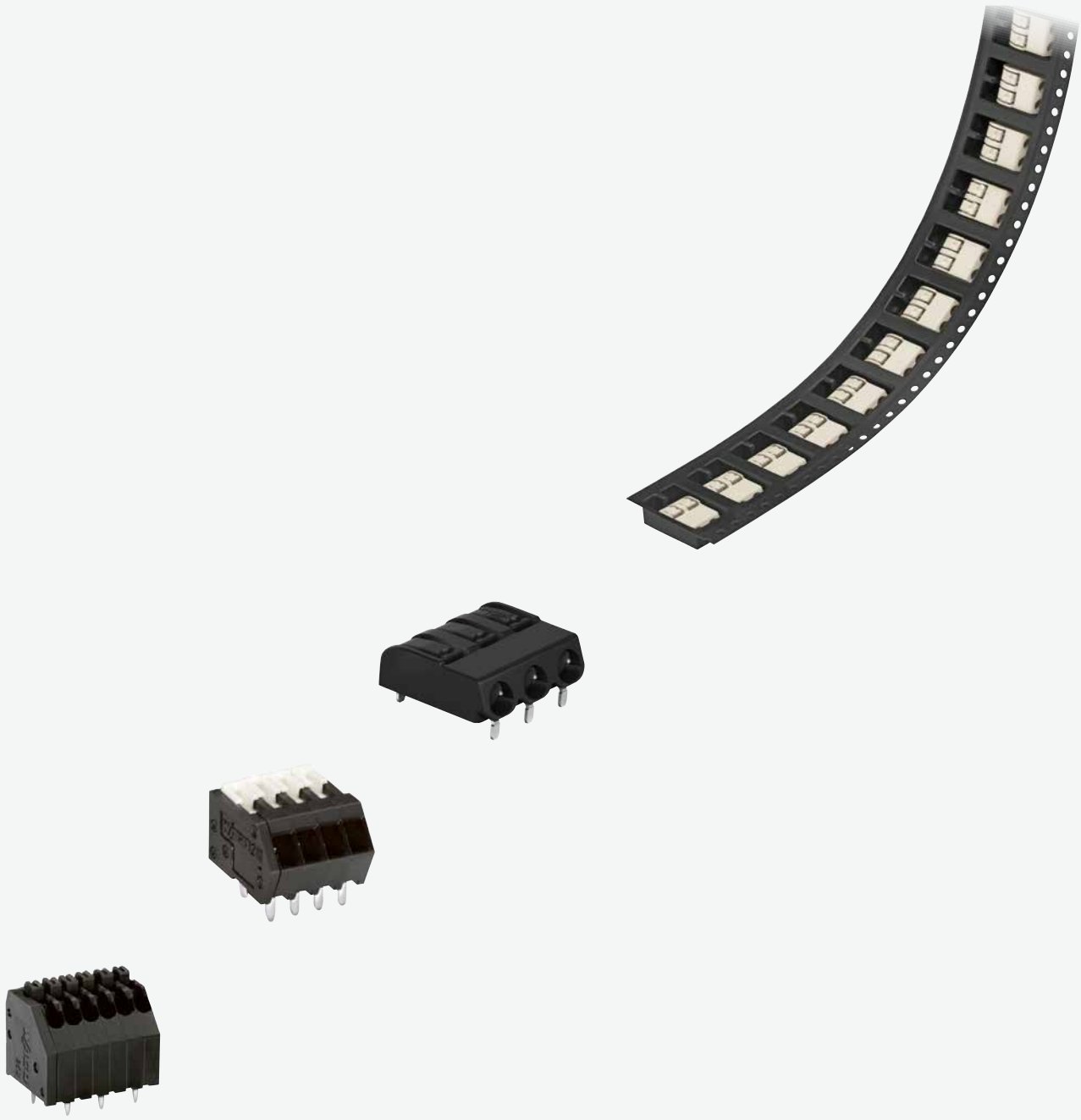

WAGO THR PCB Terminal Blocks

WAGO THR PCB Terminal Blocks

		Nominal Cross-Section	Series	Page
	THR PCB Terminal Blocks ▸ Actuation type: Push-button ▸ Push-in CAGE CLAMP®	0.75 mm² 1.5 mm²	2060 2061	280 286
	THR PCB Terminal Blocks ▸ Actuation type: Push-button ▸ Push-in CAGE CLAMP®	1.5 mm²	2086	294
	THR PCB Terminal Blocks ▸ Actuation type: Push-button ▸ Push-in CAGE CLAMP®	1.5; 2.5 mm²	250	336
	THR PCB Terminal Blocks ▸ Actuation type: Push-button ▸ Push-in CAGE CLAMP®	1.5 mm²	805	340
	THR PCB Terminal Blocks ▸ Actuation type: Operating tool ▸ CAGE CLAMP®	2.5 mm²	236	342
	THR PCB Terminal Blocks ▸ Actuation type: Confirmation slide switch ▸ CAGE CLAMP®	2.5 mm²	218	344
	Accessories for THR PCB Terminal Blocks			348
	Accessories and Tools			1063

THR (Through-Hole Reflow) Soldering Process



By using high-temperature-resistant plastic and a streamlined pin design, WAGO's THR male headers and PCB terminal blocks meet requirements for SMT process capability while maintaining the necessary stability. Both headers and terminal blocks are simply pushed into the solder paste-filled PCB holes and then soldered along with the SMT components via reflow soldering. The previous wave soldering process is no longer necessary. The result is a perfect connection – both mechanically and electrically.

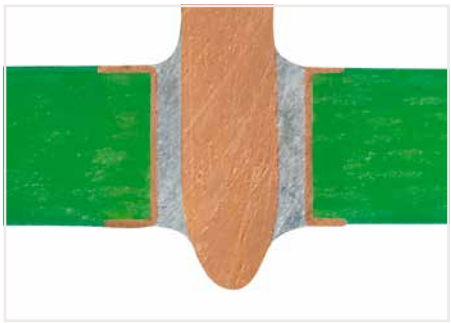



Terminal strips with an additional suction pad in tape-and-reel packaging per IEC 60286-3
WAGO recommends both a temperature profile that adheres to EN 61760-1 and the use of forced convection ovens for processing THR components.

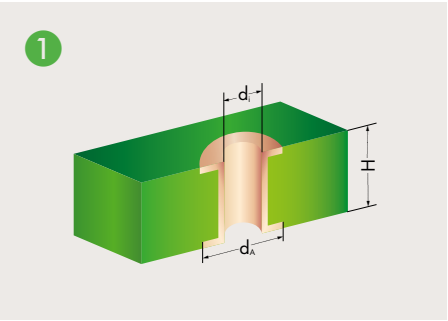

Metal-plated PCB bore hole

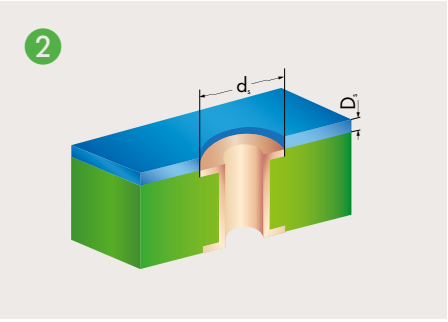

SMD positioning pattern

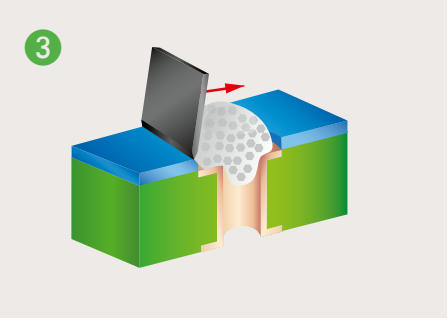

Solder paste application

Series	d_i (mm)	d_A (mm)	H (mm)	d_s (mm)	D_s (µm)	d (mm)	L (mm)
218	$1.1^{+0.1}$	1.9	< 2	1.8	150	0.9	2.8
231 (1 x 1 mm)	$1.4^{+0.1}$	2.5	< 2	2.4	150	1.2	2.4
231 (1.2 x 1.2 mm)	$1.7^{+0.1}$	2.8	< 2	2.7	150	1.5	2.4
236	$1.1^{+0.1}$	2.2	< 2	2.1	150	0.9	3.6
250	$1.1^{+0.1}$	2.0	< 2	1.9	150	0.9	2.4
713	$1.0^{+0.1}$	1.9	< 2	1.8	150	1.0	2.4
733	$1.2^{+0.1}$	1.9	< 2	1.8	150	1.0	2.4
734	$1.4^{+0.1}$	2.5	< 2	2.4	150	1.2	2.4
2060	$1.5^{+0.1}$	2.4	< 2	2.3	150	1.25	2.4
2061	$1.5^{+0.1}$	2.4	< 2	2.3	150	1.25	1.5 / 2.4
2086	$1.0^{+0.1}$	2.0	< 2	1.9	150	0.85	1.5 / 2.4

d_i: Plated through-hole diameter
d_A: Outer diameter of metal-plated PCB hole*
H: PCB thickness
d_s: Pattern hole diameter
D_s: Pattern thickness
d: Pin diagonal
L: Pin length

* When laying out the metal-plated bore holes, the clearance and creepage distance requirements – as specified in the equipment standards – must be considered.

Solder pin form

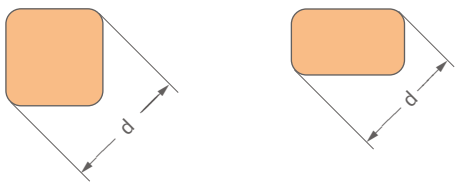

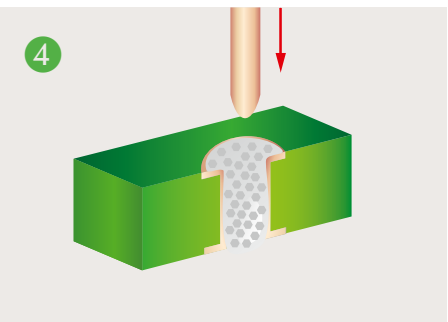

Component assembly, automatic/by hand

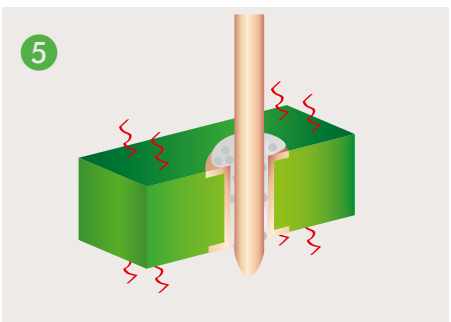

Reflow soldering process

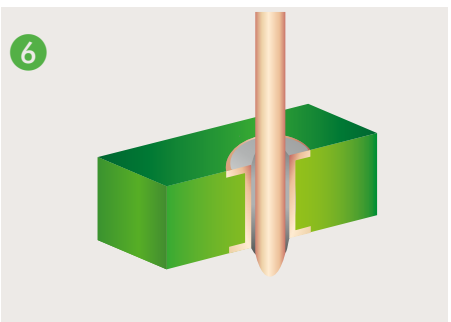

THR soldering joint

THR PCB terminal block ▸ 2060 Series

Push-in CAGE CLAMP® ▸ Actuation type: Push-button ▸ 0.75 mm² ▸ Pin spacing: 4 mm / 0.157 inches ▸ Solder pin length: 2.4 mm

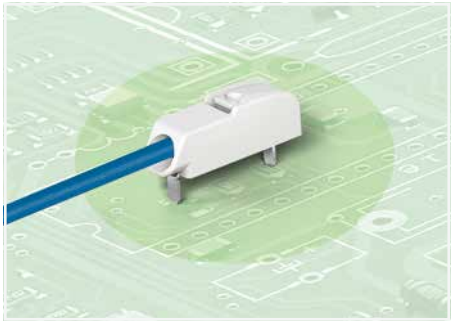

- THR PCB terminal blocks with Push-in CAGE CLAMP® connection technology and push-buttons
- Push-in termination of solid and ferruled conductors
- Convenient termination/removal of fine-stranded conductors via push-buttons
- Just 4.5 mm tall
- Available in tape-and-reel packaging for automated assembly
- Also suitable for wave soldering

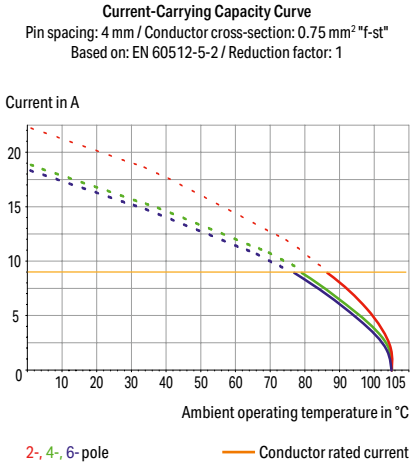

Electrical data			
Pin spacing	**4 mm / 0.157 inches**		
Ratings per	**IEC/EN 60664-1**		
Overvoltage category	III	III	II
Pollution degree	3	2	2
Nominal voltage	63 V	160 V	320 V
Rated impulse withstand voltage	2.5 kV	2.5 kV	2.5 kV
Rated current	9 A	9 A	9 A
Ratings			
Approvals per	UL 1977		
Rated voltage	600 V		
Rated current	9 A		

Connection Data	
Connection technology	Push-in CAGE CLAMP®
Strip length	6 … 7 mm / 0.24 … 0.28 inches
Conductor connection direction to PCB	0 °
Solid conductor	0.2 … 0.75 mm² / 24 … 18 AWG
Fine-stranded conductor	0.2 … 0.75 mm² / 24 … 18 AWG
Fine-stranded conductor; with insulated ferrule	0.25 … 0.34 mm²
Fine-stranded conductor; with uninsulated ferrule	0.25 … 0.34 mm²

Material data	
Material group	I
Insulation material (main housing)	Polyphthalamide (PPA GF)
Flammability class per UL94	V0
Clamping spring material	Copper alloy
Contact material	Copper alloy
Contact Plating	Tin

Mechanical data	
Solder pin arrangement	over the entire terminal strip (in-line)
Number of solder pins per potential	2
Solder pin length	2.4 mm
Solder pin dimensions	1.2 x 0.75 mm
Plated through-hole diameter (THR)	1.5 $^{(+0.1)}$ mm
Reel diameter of tape-and-reel packaging	330 mm

Environmental requirements	
Limit temperature range	-60 … +105 °C

Note:
Application notes:
Suitable for lead-free, reflow-soldering profiles per DIN EN 61760-1 and IEC 60068-2-58 up to max. 260°C peak temperature. Due to application-specific variables (component configuration and orientation, type of soldering machine, solder paste), trial runs are recommended to ensure product and process compatibility under actual manufacturing conditions. Depending on reflow soldering temperatures and times, color deviations may occur. These deviations will have no impact on functionality.
Recommendation for stencil:
150 µm material thickness
Stencil hole diameter identical to metal-plated PCB hole outer diameter

THR soldering	Page 278
Ferrule	Page 1081
Tool	Page 348
See technical section for further information	
Approvals and corresponding ratings, visit www.wago.com	

THR PCB terminal block ▸ 2060 Series

Push-in CAGE CLAMP® ▸ Actuation type: Push-button ▸ 0.75 mm² ▸ Pin spacing: 4 mm / 0.157 inches ▸ Solder pin length: 2.4 mm

Color: white



2060-1451/998-404

Pole number	Item No.	PU (SPU)
1	2060-1451/998-404	10800 (1200)

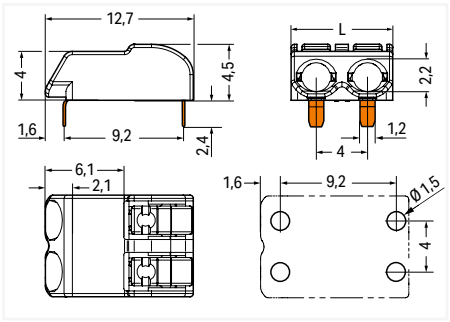

L = (pole no. x pin spacing) – 0.1 mm

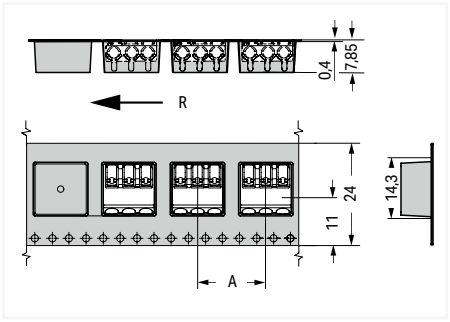

R = feed direction
A = (pole no. x pin spacing) + 4 mm

Color: black



2060-1471/998-404

Pole number	Item No.	PU (SPU)
1	2060-1471/998-404	10800 (1200)

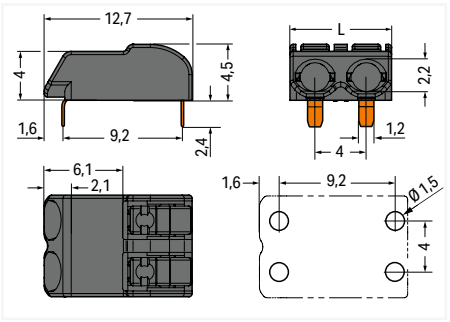

L = (pole no. x pin spacing) – 0.1 mm

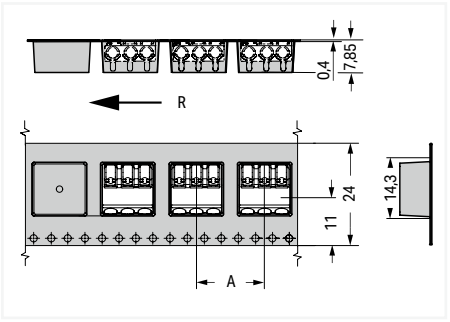

R = feed direction
A = (pole no. x pin spacing) + 4 mm



Insert solid conductors via push-in termination.



Insert/remove fine-stranded conductors by lightly pressing on push-button, e.g., via optional operating tool (206-860).

PU = packaging unit; SPU = subpackaging unit; Dimensions in mm

THR PCB terminal block ▸ 2060 Series

Push-in CAGE CLAMP® ▸ Actuation type: Push-button ▸ 0.75 mm² ▸ Pin spacing: 4 mm / 0.157 inches ▸ Solder pin length: 2.4 mm

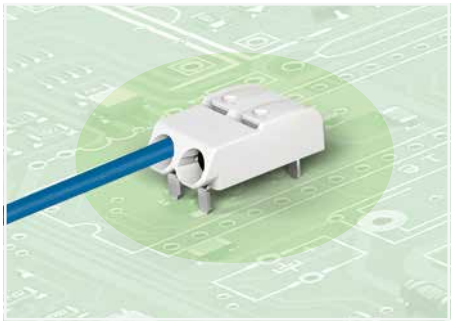

- THR PCB terminal blocks with Push-in CAGE CLAMP® connection technology and push-buttons
- Push-in termination of solid and ferruled conductors
- Convenient termination/removal of fine-stranded conductors via push-buttons
- Just 4.5 mm tall
- Available in tape-and-reel packaging for automated assembly
- Also suitable for wave soldering

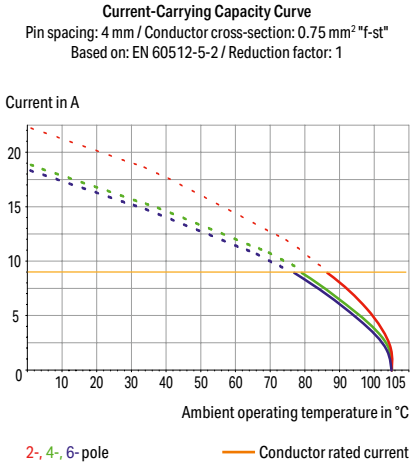

Electrical data			
Pin spacing	**4 mm / 0.157 inches**		
Ratings per	**IEC/EN 60664-1**		
Overvoltage category	III	III	II
Pollution degree	3	2	2
Nominal voltage	63 V	160 V	320 V
Rated impulse withstand voltage	2.5 kV	2.5 kV	2.5 kV
Rated current	9 A	9 A	9 A
Ratings			
Approvals per	UL 1977		
Rated voltage	600 V		
Rated current	9 A		

Connection Data	
Connection technology	Push-in CAGE CLAMP®
Strip length	6 … 7 mm / 0.24 … 0.28 inches
Conductor connection direction to PCB	0 °
Solid conductor	0.2 … 0.75 mm² / 24 … 18 AWG
Fine-stranded conductor	0.2 … 0.75 mm² / 24 … 18 AWG
Fine-stranded conductor; with insulated ferrule	0.25 … 0.34 mm²
Fine-stranded conductor; with uninsulated ferrule	0.25 … 0.34 mm²

Material data	
Material group	I
Insulation material (main housing)	Polyphthalamide (PPA GF)
Flammability class per UL94	V0
Clamping spring material	Copper alloy
Contact material	Copper alloy
Contact Plating	Tin

Mechanical data	
Solder pin arrangement	over the entire terminal strip (in-line)
Number of solder pins per potential	2
Solder pin length	2.4 mm
Solder pin dimensions	1.2 x 0.75 mm
Plated through-hole diameter (THR)	1.5 $^{(+0.1)}$ mm
Reel diameter of tape-and-reel packaging	330 mm

Environmental requirements	
Limit temperature range	-60 … +105 °C

Note:
Application notes:
Suitable for lead-free, reflow-soldering profiles per DIN EN 61760-1 and IEC 60068-2-58 up to max. 260°C peak temperature. Due to application-specific variables (component configuration and orientation, type of soldering machine, solder paste), trial runs are recommended to ensure product and process compatibility under actual manufacturing conditions. Depending on reflow soldering temperatures and times, color deviations may occur. These deviations will have no impact on functionality.
Recommendation for stencil:
150 µm material thickness
Stencil hole diameter identical to metal-plated PCB hole outer diameter

THR soldering	Page 278
Ferrule	Page 1081
Tool	Page 348

See technical section for further information

Approvals and corresponding ratings, visit www.wago.com

THR PCB terminal block ▸ 2060 Series

Push-in CAGE CLAMP® ▸ Actuation type: Push-button ▸ 0.75 mm² ▸ Pin spacing: 4 mm / 0.157 inches ▸ Solder pin length: 2.4 mm

Color: white



2060-1452/998-404

Pole number	Item No.	PU (SPU)
2	**2060-1452/998-404**	6750 (750)
3	**2060-1453/998-404**	4950 (550)

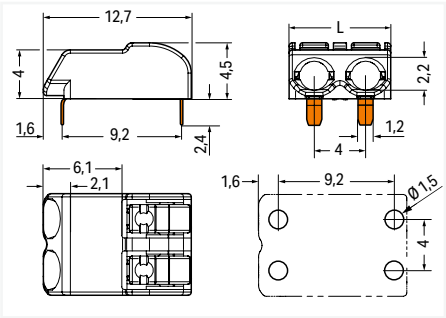

L = (pole no. x pin spacing) – 0.1 mm

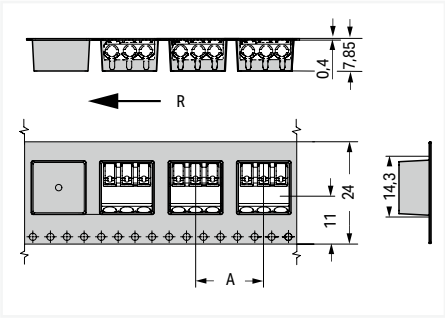

R = feed direction
A = (pole no. x pin spacing) + 4 mm

Color: black



2060-1472/998-404

Pole number	Item No.	PU (SPU)
2	**2060-1472/998-404**	6750 (750)
3	**2060-1473/998-404**	4950 (550)

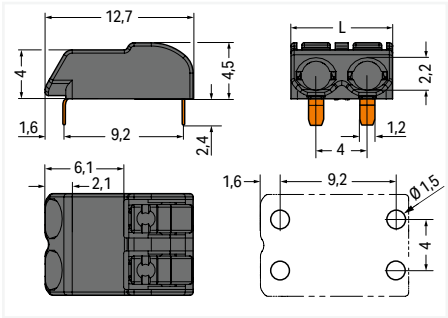

L = (pole no. x pin spacing) – 0.1 mm

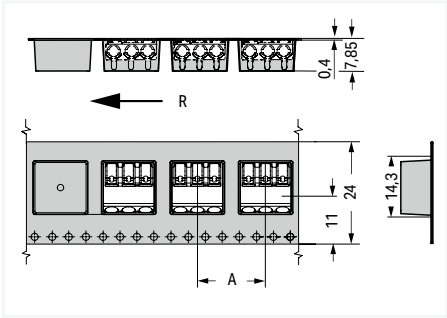

R = feed direction
A = (pole no. x pin spacing) + 4 mm



Insert solid conductors via push-in termination.



Insert/remove fine-stranded conductors by lightly pressing on push-button, e.g., via optional operating tool (206-860).

PU = packaging unit; SPU = subpackaging unit; Dimensions in mm

THR PCB terminal block ▸ 2060 Series

Push-in CAGE CLAMP® ▸ Actuation type: Push-button ▸ 0.75 mm² ▸ Pin spacing: 8 mm / 0.314 inches ▸ Solder pin length: 2.4 mm



- THR PCB terminal blocks with Push-in CAGE CLAMP® connection technology and push-buttons
- Push-in termination of solid and ferruled conductors
- Convenient termination/removal of fine-stranded conductors via push-buttons
- Just 4.5 mm tall
- Available in tape-and-reel packaging for automated assembly
- Also suitable for wave soldering

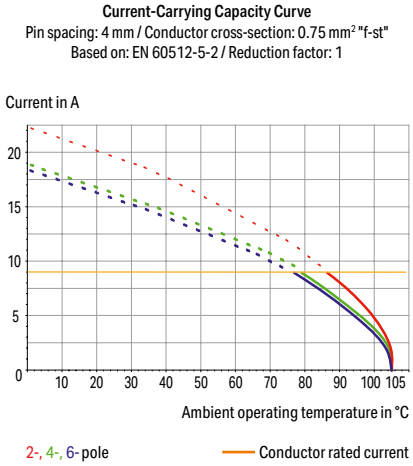

Electrical data			
Pin spacing	**8 mm / 0.314 inches**		
Ratings per	**IEC/EN 60664-1**		
Overvoltage category	III	III	II
Pollution degree	3	2	2
Nominal voltage	400 V	630 V	1000 V
Rated impulse withstand voltage	6 kV	6 kV	6 kV
Rated current	9 A	9 A	9 A

Connection Data	
Connection technology	Push-in CAGE CLAMP®
Strip length	6 … 7 mm / 0.24 … 0.28 inches
Conductor connection direction to PCB	0 °
Solid conductor	0.2 … 0.75 mm² / 24 … 18 AWG
Fine-stranded conductor	0.2 … 0.75 mm² / 24 … 18 AWG
Fine-stranded conductor; with insulated ferrule	0.25 … 0.34 mm²
Fine-stranded conductor; with uninsulated ferrule	0.25 … 0.34 mm²

Material data	
Material group	I
Insulation material (main housing)	Polyphthalamide (PPA GF)
Flammability class per UL94	V0
Clamping spring material	Copper alloy
Contact material	Copper alloy
Contact Plating	Tin

Mechanical data	
Solder pin arrangement	over the entire terminal strip (in-line)
Number of solder pins per potential	2
Solder pin length	2.4 mm
Solder pin dimensions	1.2 x 0.75 mm
Plated through-hole diameter (THR)	1.5 $^{(+0.1)}$ mm
Reel diameter of tape-and-reel packaging	330 mm

Environmental requirements	
Limit temperature range	-60 … +105 °C

Note:
Application notes:
Suitable for lead-free, reflow-soldering profiles per DIN EN 61760-1 and IEC 60068-2-58 up to max. 260°C peak temperature. Due to application-specific variables (component configuration and orientation, type of soldering machine, solder paste), trial runs are recommended to ensure product and process compatibility under actual manufacturing conditions. Depending on reflow soldering temperatures and times, color deviations may occur. These deviations will have no impact on functionality.
Recommendation for stencil:
150 µm material thickness
Stencil hole diameter identical to metal-plated PCB hole outer diameter

THR soldering	Page 278
Ferrule	Page 1081
Tool	Page 348
See technical section for further information	
Approvals and corresponding ratings, visit www.wago.com	

THR PCB terminal block ▸ 2060 Series

Push-in CAGE CLAMP® ▸ Actuation type: Push-button ▸ 0.75 mm² ▸ Pin spacing: 8 mm / 0.314 inches ▸ Solder pin length: 2.4 mm

Color: white



2060-1852/998-404

Pole number	Item No.	PU (SPU)
2	**2060-1852/998-404**	4950 (550)

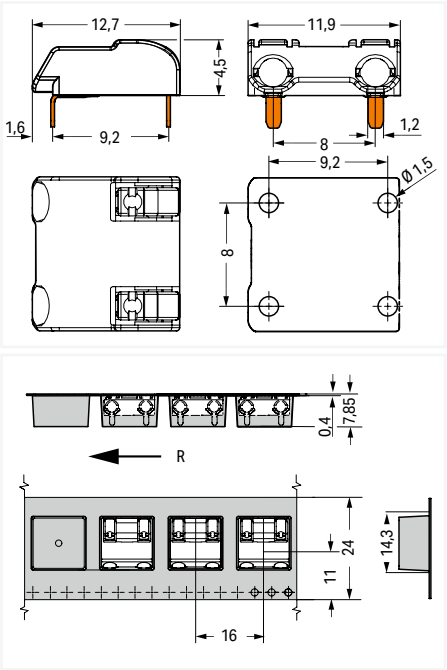

R = feed direction

Color: black



2060-1872/998-404

Pole number	Item No.	PU (SPU)
2	**2060-1872/998-404**	4950 (550)

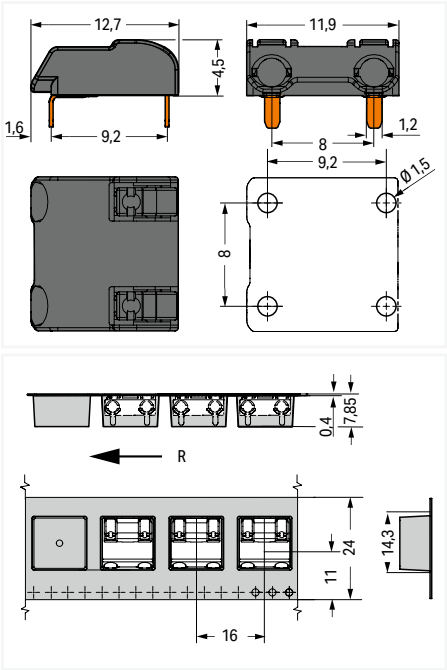

R = feed direction



Insert solid conductors via push-in termination.



Insert/remove fine-stranded conductors by lightly pressing on push-button, e.g., via optional operating tool (206-860).

PU = packaging unit; SPU = subpackaging unit; Dimensions in mm

THR PCB terminal block ▸ 2061 Series

Push-in CAGE CLAMP® ▸ Actuation type: Push-button ▸ 1.5 mm² ▸ Pin spacing: 6 mm / 0.24 inches ▸ Solder pin length: 1.5 mm

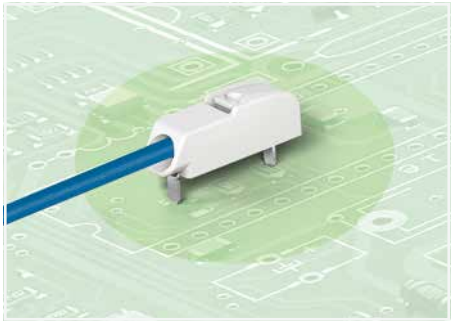

- THR PCB terminal blocks with Push-in CAGE CLAMP® connection technology and push-buttons
- Push-in termination of solid and ferruled conductors
- Convenient termination/removal of fine-stranded conductors via push-buttons
- Just 5.6 mm tall
- Available in tape-and-reel packaging for automated assembly
- Also suitable for wave soldering
- Assemble terminal blocks without pole loss

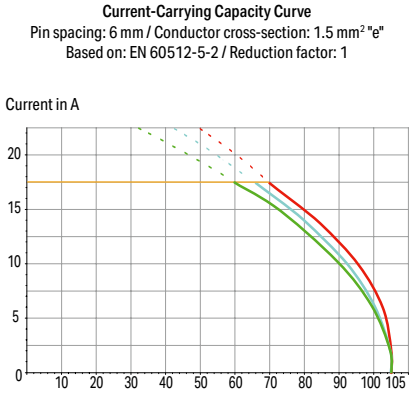

Electrical data			
Pin spacing	**6 mm / 0.24 inches**		
Ratings per	**IEC/EN 60664-1**		
Overvoltage category	III	III	II
Pollution degree	3	2	2
Nominal voltage	250 V	320 V	630 V
Rated impulse withstand voltage	4 kV	4 kV	4 kV
Rated current	17.5 A	17.5 A	17.5 A
Approvals per	**UL 1059**		
Use group	B	C	D
Rated voltage	600 V	-	600 V
Rated current	10 A	-	5 A

Connection Data	
Connection technology	Push-in CAGE CLAMP®
Strip length	7 … 10 mm / 0.28 … 0.39 inches
Conductor connection direction to PCB	0 °
Solid conductor	0.25 … 1.5 mm² / 20 … 16 AWG
Fine-stranded conductor	0.5 … 1.5 mm² / 20 … 16 AWG
Fine-stranded conductor; with insulated ferrule	0.5 … 0.75 mm²
Fine-stranded conductor; with uninsulated ferrule	0.5 … 0.75 mm²

Material data	
Material group	I
Insulation material (main housing)	Polyphthalamide (PPA GF)
Flammability class per UL94	V0
Contact material	Copper alloy
Contact Plating	Tin

Mechanical data	
Solder pin arrangement	over the entire terminal strip (in-line)
Number of solder pins per potential	2
Solder pin length	1.5 mm
Solder pin dimensions	1.2 x 0.35 mm
Plated through-hole diameter (THR)	1.5 (+0.1) mm
Reel diameter of tape-and-reel packaging	330 mm

Environmental requirements	
Limit temperature range	-60 … +105 °C

Note:
Application notes:
Suitable for lead-free, reflow-soldering profiles per DIN EN 61760-1 and IEC 60068-2-58 up to max. 260°C peak temperature. Due to application-specific variables (component configuration and orientation, type of soldering machine, solder paste), trial runs are recommended to ensure product and process compatibility under actual manufacturing conditions. Depending on reflow soldering temperatures and times, color deviations may occur. These deviations will have no impact on functionality.
Recommendation for stencil:
150 µm material thickness
Stencil hole diameter identical to metal-plated PCB hole outer diameter

THR soldering	Page 278
Ferrule	Page 1081
Tool	Page 349
See technical section for further information	
Approvals and corresponding ratings, visit www.wago.com	

THR PCB terminal block ▸ 2061 Series

Push-in CAGE CLAMP® ▸ Actuation type: Push-button ▸ 1.5 mm² ▸ Pin spacing: 6 mm / 0.24 inches ▸ Solder pin length: 1.5 mm

Color: white



2061-1641/998-404

Pole number	Item No.	PU (SPU)
1	2061-1641/998-404	5760 (640)

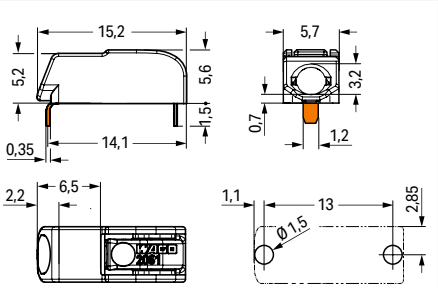

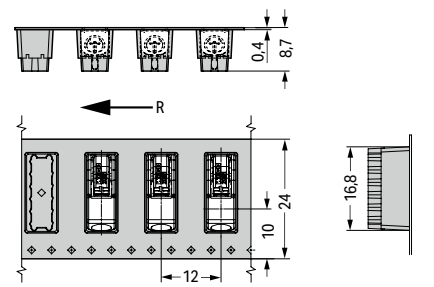

R = feed direction

Color: black



2061-1661/998-404

Pole number	Item No.	PU (SPU)
1	2061-1661/998-404	5760 (640)

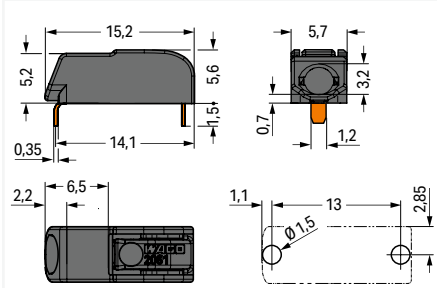

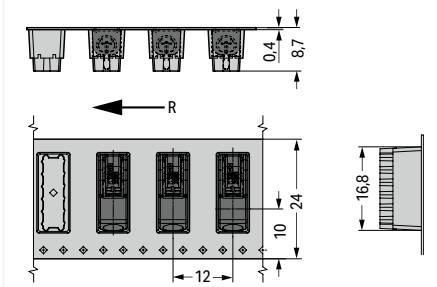

R = feed direction



Inserting solid conductors via push-in termination.



Easy conductor removal, e.g., via operating tool (206-861)

PU = packaging unit; SPU = subpackaging unit; Dimensions in mm

THR PCB terminal block ▸ 2061 Series

Push-in CAGE CLAMP® ▸ Actuation type: Push-button ▸ 1.5 mm² ▸ Pin spacing: 6 mm / 0.24 inches ▸ Solder pin length: 1.5 mm

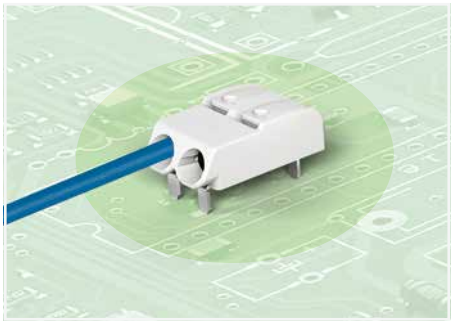

- THR PCB terminal blocks with Push-in CAGE CLAMP® connection technology and push-buttons
- Push-in termination of solid and ferruled conductors
- Convenient termination/removal of fine-stranded conductors via push-buttons
- Just 5.6 mm tall
- Available in tape-and-reel packaging for automated assembly
- Also suitable for wave soldering
- Assemble terminal blocks without pole loss

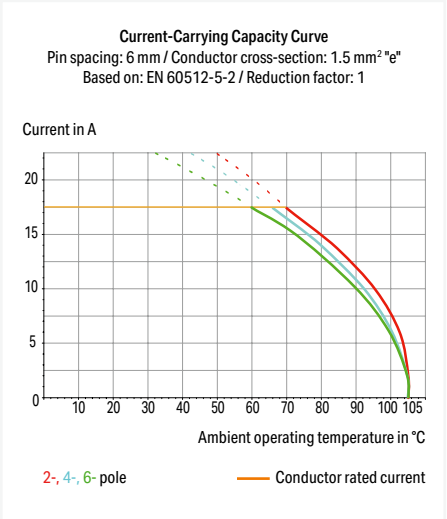

Electrical data			
Pin spacing	**6 mm / 0.24 inches**		
Ratings per	**IEC/EN 60664-1**		
Overvoltage category	III	III	II
Pollution degree	3	2	2
Nominal voltage	250 V	320 V	630 V
Rated impulse withstand voltage	4 kV	4 kV	4 kV
Rated current	17.5 A	17.5 A	17.5 A
Approvals per	**UL 1059**		
Use group	B	C	D
Rated voltage	300 V	-	300 V
Rated current	10 A	-	10 A

Connection Data	
Connection technology	Push-in CAGE CLAMP®
Strip length	7 … 10 mm / 0.28 … 0.39 inches
Conductor connection direction to PCB	0 °
Solid conductor	0.25 … 1.5 mm² / 20 … 16 AWG
Fine-stranded conductor	0.5 … 1.5 mm² / 20 … 16 AWG
Fine-stranded conductor; with insulated ferrule	0.5 … 0.75 mm²
Fine-stranded conductor; with uninsulated ferrule	0.5 … 0.75 mm²

Material data	
Material group	I
Insulation material (main housing)	Polyphthalamide (PPA GF)
Flammability class per UL94	V0
Contact material	Copper alloy
Contact Plating	Tin

Mechanical data	
Solder pin arrangement	over the entire terminal strip (in-line)
Number of solder pins per potential	2
Solder pin length	1.5 mm
Solder pin dimensions	1.2 x 0.35 mm
Plated through-hole diameter (THR)	1.5 (+0.1) mm
Reel diameter of tape-and-reel packaging	330 mm

Environmental requirements	
Limit temperature range	-60 … +105 °C

Note:
Application notes:
Suitable for lead-free, reflow-soldering profiles per DIN EN 61760-1 and IEC 60068-2-58 up to max. 260°C peak temperature. Due to application-specific variables (component configuration and orientation, type of soldering machine, solder paste), trial runs are recommended to ensure product and process compatibility under actual manufacturing conditions. Depending on reflow soldering temperatures and times, color deviations may occur. These deviations will have no impact on functionality.
Recommendation for stencil:
150 µm material thickness
Stencil hole diameter identical to metal-plated PCB hole outer diameter

THR soldering	Page 278
Ferrule	Page 1081
Tool	Page 349
See technical section for further information	
Approvals and corresponding ratings, visit www.wago.com	

THR PCB terminal block ▸ 2061 Series

Push-in CAGE CLAMP® ▸ Actuation type: Push-button ▸ 1.5 mm² ▸ Pin spacing: 6 mm / 0.24 inches ▸ Solder pin length: 1.5 mm

Color: white



2061-1642/998-404

Pole number	Item No.	PU (SPU)
2	**2061-1642/998-404**	4320 (480)
3	**2061-1643/998-404**	2880 (320)

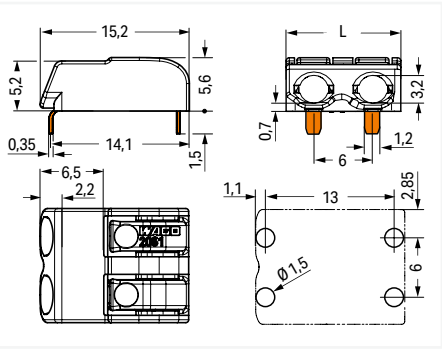

L = (pole no. x pin spacing) – 0.3 mm

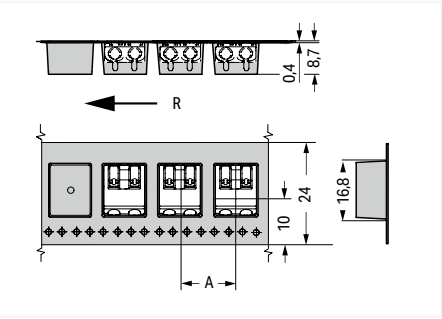

R = feed direction
A = 16 mm (2-pole)
A = 22 mm (3-pole)

Color: black



2061-1662/998-404

Pole number	Item No.	PU (SPU)
2	**2061-1662/998-404**	4320 (480)
3	**2061-1663/998-404**	2880 (320)

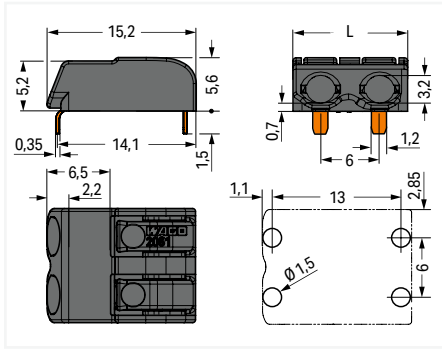

L = (pole no. x pin spacing) – 0.3 mm

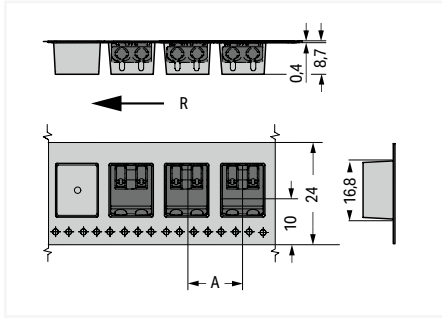

R = feed direction
A = 16 mm (2-pole)
A = 22 mm (3-pole)



Inserting solid conductors via push-in termination.



Easy conductor removal, e.g., via operating tool (206-861)

PU = packaging unit; SPU = subpackaging unit; Dimensions in mm

THR PCB terminal block ▸ 2061 Series

Push-in CAGE CLAMP® ▸ Actuation type: Push-button ▸ 1.5 mm² ▸ Pin spacing: 6 mm / 0.24 inches ▸ Solder pin length: 2.4 mm

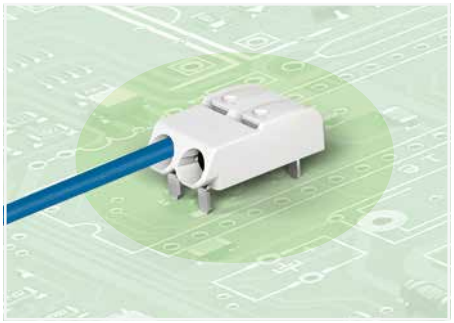

- THR PCB terminal blocks with Push-in CAGE CLAMP® connection technology and push-buttons
- Push-in termination of solid and ferruled conductors
- Convenient termination/removal of fine-stranded conductors via push-buttons
- Just 5.6 mm tall
- Available in tape-and-reel packaging for automated assembly
- Also suitable for wave soldering
- Assemble terminal blocks without pole loss

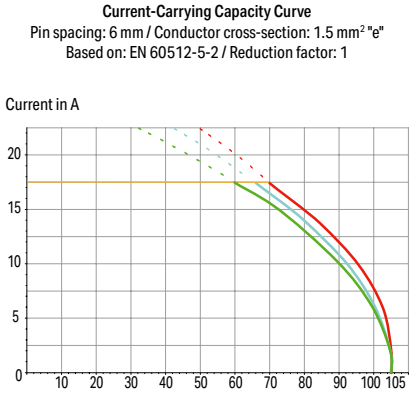

Electrical data			
Pin spacing	**6 mm / 0.24 inches**		
Ratings per	**IEC/EN 60664-1**		
Overvoltage category	III	III	II
Pollution degree	3	2	2
Nominal voltage	250 V	320 V	630 V
Rated impulse withstand voltage	4 kV	4 kV	4 kV
Rated current	17.5 A	17.5 A	17.5 A
Approvals per	**UL 1059**		
Use group	B	C	D
Rated voltage	600 V	-	600 V
Rated current	10 A	-	5 A

Connection Data	
Connection technology	Push-in CAGE CLAMP®
Strip length	7 … 10 mm / 0.28 … 0.39 inches
Conductor connection direction to PCB	0 °
Solid conductor	0.25 … 1.5 mm² / 20 … 16 AWG
Fine-stranded conductor	0.5 … 1.5 mm² / 20 … 16 AWG
Fine-stranded conductor; with insulated ferrule	0.5 … 0.75 mm²
Fine-stranded conductor; with uninsulated ferrule	0.5 … 0.75 mm²

Material data	
Material group	I
Insulation material (main housing)	Polyphthalamide (PPA GF)
Flammability class per UL94	V0
Contact material	Copper alloy
Contact Plating	Tin

Mechanical data	
Solder pin arrangement	over the entire terminal strip (in-line)
Number of solder pins per potential	2
Solder pin length	2.4 mm
Solder pin dimensions	1.2 x 0.35 mm
Plated through-hole diameter (THR)	1.5 $^{(+0.1)}$ mm
Reel diameter of tape-and-reel packaging	330 mm

Environmental requirements	
Limit temperature range	-60 … +105 °C

Note:
Application notes:
Suitable for lead-free, reflow-soldering profiles per DIN EN 61760-1 and IEC 60068-2-58 up to max. 260°C peak temperature. Due to application-specific variables (component configuration and orientation, type of soldering machine, solder paste), trial runs are recommended to ensure product and process compatibility under actual manufacturing conditions. Depending on reflow soldering temperatures and times, color deviations may occur. These deviations will have no impact on functionality.
Recommendation for stencil:
150 µm material thickness
Stencil hole diameter identical to metal-plated PCB hole outer diameter

THR soldering	Page 278
Ferrule	Page 1081
Tool	Page 349
See technical section for further information	
Approvals and corresponding ratings, visit www.wago.com	

THR PCB terminal block ▸ 2061 Series

Push-in CAGE CLAMP® ▸ Actuation type: Push-button ▸ 1.5 mm² ▸ Pin spacing: 6 mm / 0.24 inches ▸ Solder pin length: 2.4 mm

Color: white



2061-1601/998-404

Pole number	Item No.	PU (SPU)
1	2061-1601/998-404	5760 (640)

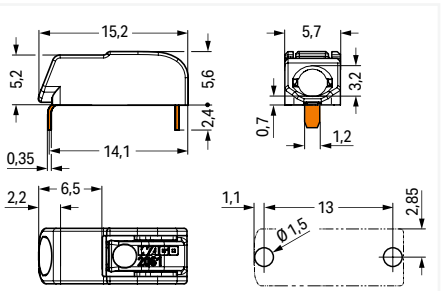

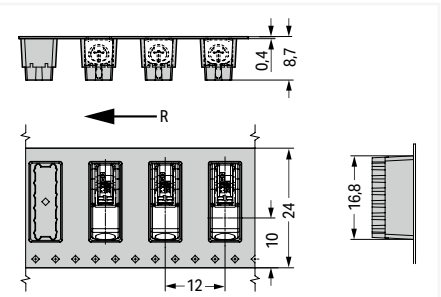

R = feed direction

Color: black



2061-1621/998-404

Pole number	Item No.	PU (SPU)
1	2061-1621/998-404	5760 (640)

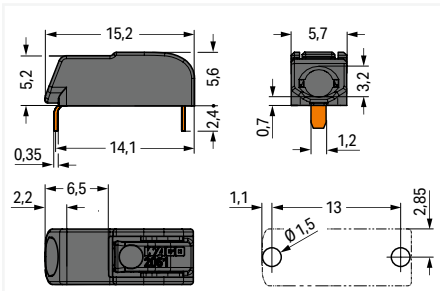

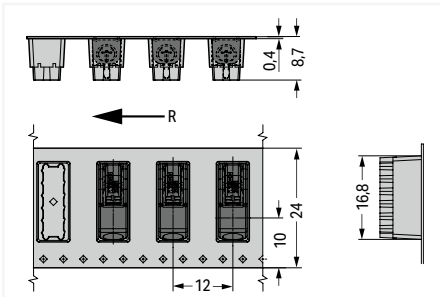

R = feed direction



Inserting solid conductors via push-in termination.



Easy conductor removal, e.g., via operating tool (206-861)

PU = packaging unit; SPU = subpackaging unit; Dimensions in mm

THR PCB terminal block ▸ 2061 Series

Push-in CAGE CLAMP® ▸ Actuation type: Push-button ▸ 1.5 mm² ▸ Pin spacing: 6 mm / 0.24 inches ▸ Solder pin length: 2.4 mm

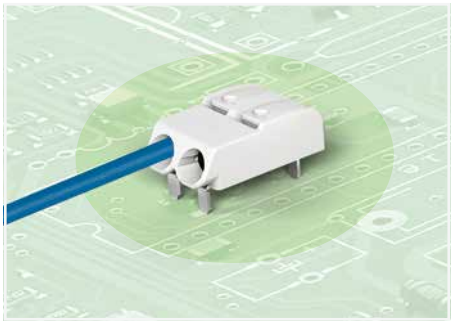

- THR PCB terminal blocks with Push-in CAGE CLAMP® connection technology and push-buttons
- Push-in termination of solid and ferruled conductors
- Convenient termination/removal of fine-stranded conductors via push-buttons
- Just 5.6 mm tall
- Available in tape-and-reel packaging for automated assembly
- Also suitable for wave soldering
- Assemble terminal blocks without pole loss

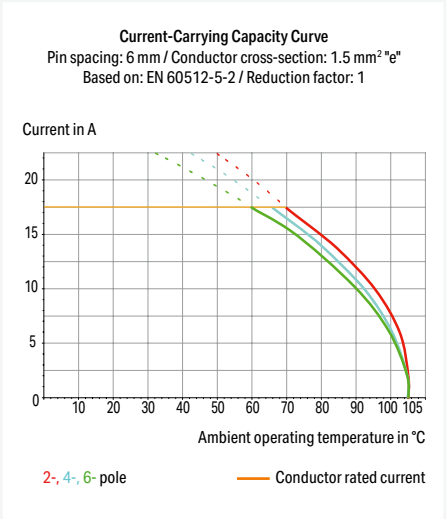

Electrical data			
Pin spacing	**6 mm / 0.24 inches**		
Ratings per	**IEC/EN 60664-1**		
Overvoltage category	III	III	II
Pollution degree	3	2	2
Nominal voltage	250 V	320 V	630 V
Rated impulse withstand voltage	4 kV	4 kV	4 kV
Rated current	17.5 A	17.5 A	17.5 A
Approvals per	**UL 1059**		
Use group	B	C	D
Rated voltage	300 V	-	300 V
Rated current	10 A	-	10 A

Connection Data	
Connection technology	Push-in CAGE CLAMP®
Strip length	7 … 10 mm / 0.28 … 0.39 inches
Conductor connection direction to PCB	0 °
Solid conductor	0.25 … 1.5 mm² / 20 … 16 AWG
Fine-stranded conductor	0.5 … 1.5 mm² / 20 … 16 AWG
Fine-stranded conductor; with insulated ferrule	0.5 … 0.75 mm²
Fine-stranded conductor; with uninsulated ferrule	0.5 … 0.75 mm²

Material data	
Material group	I
Insulation material (main housing)	Polyphthalamide (PPA GF)
Flammability class per UL94	V0
Contact material	Copper alloy
Contact Plating	Tin

Mechanical data	
Solder pin arrangement	over the entire terminal strip (in-line)
Number of solder pins per potential	2
Solder pin length	2.4 mm
Solder pin dimensions	1.2 x 0.35 mm
Plated through-hole diameter (THR)	1.5 $^{(+0.1)}$ mm
Reel diameter of tape-and-reel packaging	330 mm

Environmental requirements	
Limit temperature range	-60 … +105 °C

Note:
Application notes:
Suitable for lead-free, reflow-soldering profiles per DIN EN 61760-1 and IEC 60068-2-58 up to max. 260°C peak temperature. Due to application-specific variables (component configuration and orientation, type of soldering machine, solder paste), trial runs are recommended to ensure product and process compatibility under actual manufacturing conditions. Depending on reflow soldering temperatures and times, color deviations may occur. These deviations will have no impact on functionality.
Recommendation for stencil:
150 µm material thickness
Stencil hole diameter identical to metal-plated PCB hole outer diameter

THR soldering	Page 278
Ferrule	Page 1081
Tool	Page 349
See technical section for further information	
Approvals and corresponding ratings, visit www.wago.com	

THR PCB terminal block ▸ 2061 Series

Push-in CAGE CLAMP® ▸ Actuation type: Push-button ▸ 1.5 mm² ▸ Pin spacing: 6 mm / 0.24 inches ▸ Solder pin length: 2.4 mm

Color: white



2061-1602/998-404

Pole number	Item No.	PU (SPU)
2	**2061-1602/998-404**	4320 (480)
3	**2061-1603/998-404**	2880 (320)

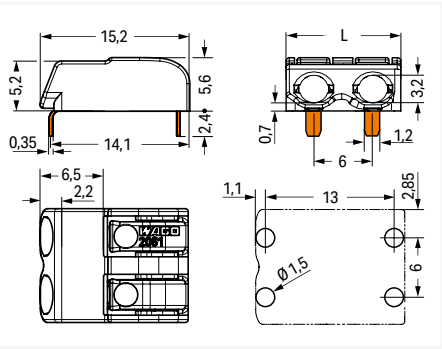

L = (pole no. x pin spacing) – 0.3 mm

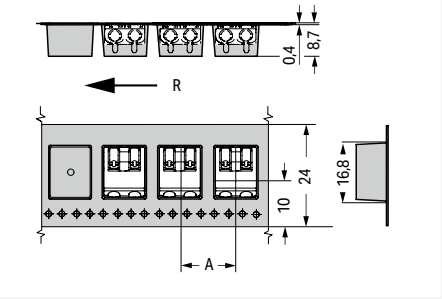

R = feed direction
A = 16 mm (2-pole)
A = 22 mm (3-pole)

Color: black



2061-1622/998-404

Pole number	Item No.	PU (SPU)
2	**2061-1622/998-404**	4320 (480)
3	**2061-1623/998-404**	2880 (320)

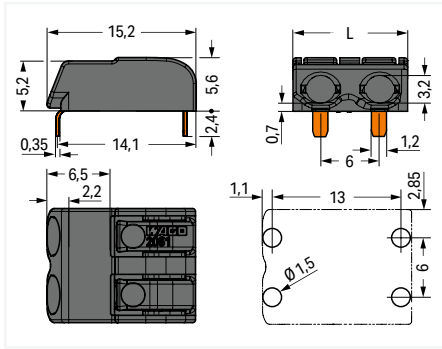

L = (pole no. x pin spacing) – 0.3 mm

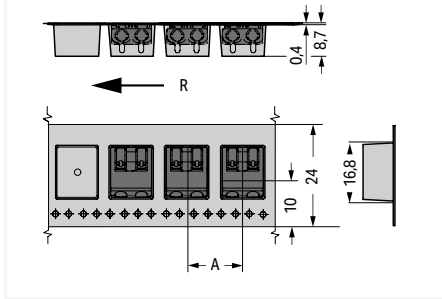

R = feed direction
A = 16 mm (2-pole)
A = 22 mm (3-pole)



Inserting solid conductors via push-in termination.



Easy conductor removal, e.g., via operating tool (206-861)

PU = packaging unit; SPU = subpackaging unit; Dimensions in mm

THR PCB terminal block ▸ 2086 Series

Push-in CAGE CLAMP® ▸ Actuation type: Push-button ▸ 1.5 mm² ▸ Pin spacing: 3.5 mm / 0.138 inches ▸ Solder pin arrangement: over the entire terminal strip (in-line) ▸ Color: black



- Ideal for compact device connection, panel feedthrough and tight spaces
- Push-in CAGE CLAMP® termination of solid and ferruled fine-stranded conductors
- SMD and THR variants available
- Push-button moves in direction of conductor connection
- Conductor connection and mating direction parallel or perpendicular to the PCB
- Optionally available with in-line or staggered pins (3.5 and 5 mm pin spacing)

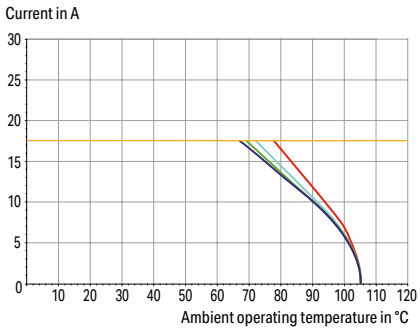

Electrical data			
Ratings per	**IEC/EN 60664-1**		
Overvoltage category	III	III	II
Pollution degree	3	2	2
Nominal voltage	160 V	160 V	320 V
Rated impulse withstand voltage	2.5 kV	2.5 kV	2.5 kV
Rated current	17.5 A	17.5 A	17.5 A
Approvals per	**UL 1059**		
Use group	B	C	D
Rated voltage	300 V	-	300 V
Rated current	14 A	-	10 A
Approvals per	**CSA**		
Use group	B	C	D
Rated voltage	300 V	-	300 V
Rated current	14 A	-	14 A

Connection Data	
Connection technology	Push-in CAGE CLAMP®
Strip length	8 … 9 mm / 0.31 … 0.35 inches
Solid conductor	0.14 … 1.5 mm² / 28 … 16 AWG
Fine-stranded conductor	0.14 … 1.5 mm² / 26 … 14 AWG
Fine-stranded conductor; with insulated ferrule	0.25 … 0.75 mm²
Fine-stranded conductor; with uninsulated ferrule	0.25 … 1.5 mm²

Material data	
Material group	I
Insulation material (main housing)	Polyphthalamide (PPA GF)
Flammability class per UL94	V0
Clamping spring material	Chrome-nickel spring steel (CrNi)
Contact material	Electrolytic copper (E_{Cu})
Contact Plating	Tin

Mechanical data	
Solder pin arrangement	over the entire terminal strip (in-line)
Number of solder pins per potential	2
Solder pin dimensions	0.3 x 0.8 mm
Plated through-hole diameter (THR)	1 $^{(+0.1)}$ mm

Environmental requirements	
Limit temperature range	-60 … +105 °C
Processing temperature	-35 … +60 °C
Continuous operating temperature	-60 … +105 °C

Note:
Application notes:
Suitable for lead-free, reflow-soldering profiles per DIN EN 61760-1 and IEC 60068-2-58 up to max. 260°C peak temperature. Due to application-specific variables (component configuration and orientation, type of soldering machine, solder paste), trial runs are recommended to ensure product and process compatibility under actual manufacturing conditions.

Ferrule	Page 1081
Test and measurement	Page 1088
Tool	Page 1072
See technical section for further information	
Approvals and corresponding ratings, visit www.wago.com	

THR PCB terminal block ▸ 2086 Series

Push-in CAGE CLAMP® ▸ Actuation type: Push-button ▸ 1.5 mm² ▸ Pin spacing: 3.5 mm / 0.138 inches ▸ Solder pin arrangement: over the entire terminal strip (in-line) ▸ Color: black

Solder pin length: 1.5 mm

Conductor connection direction to PCB 0 °

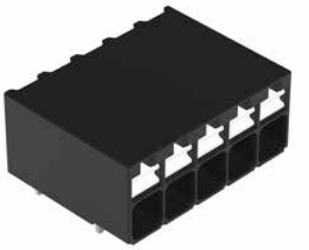

2086-1205/300-000

Pole number	Item No.	PU
2	2086-1202/300-000	432
3	2086-1203/300-000	288
4	2086-1204/300-000	216
5	2086-1205/300-000	180
6	2086-1206/300-000	144
7	2086-1207/300-000	132
8	2086-1208/300-000	108
9	2086-1209/300-000	96
10	2086-1210/300-000	84
11	2086-1211/300-000	84
12	2086-1212/300-000	72

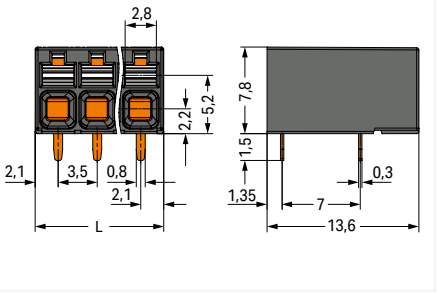

L = (pole no. – 1) x pin spacing + 4.2 mm

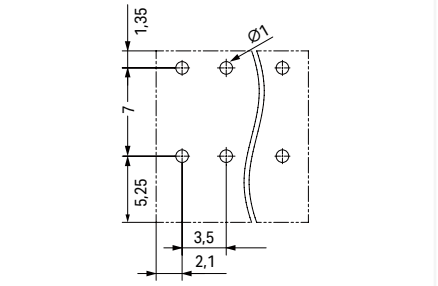

Conductor connection direction to PCB 90 °



2086-1105/300-000

Pole number	Item No.	PU
2	2086-1102/300-000	432
3	2086-1103/300-000	288
4	2086-1104/300-000	216
5	2086-1105/300-000	180
6	2086-1106/300-000	144
7	2086-1107/300-000	132
8	2086-1108/300-000	108
9	2086-1109/300-000	96
10	2086-1110/300-000	84
11	2086-1111/300-000	84
12	2086-1112/300-000	72

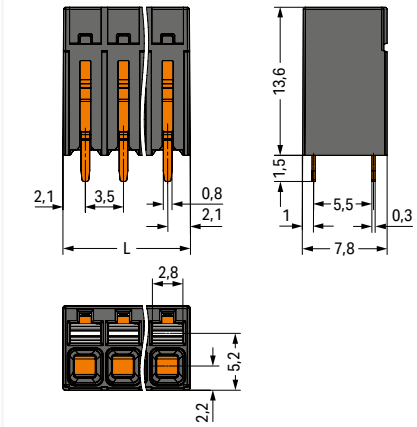

L = (pole no. – 1) x pin spacing + 4.2 mm

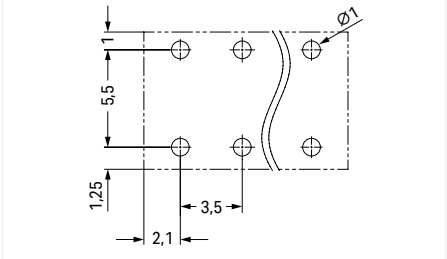

PU = packaging unit; SPU = subpackaging unit; Dimensions in mm

THR PCB terminal block ▸ 2086 Series

Push-in CAGE CLAMP® ▸ Actuation type: Push-button ▸ 1.5 mm² ▸ Pin spacing: 3.5 mm / 0.138 inches ▸ Solder pin arrangement: over the entire terminal strip (in-line) ▸ Color: black

Solder pin length: 2.4 mm

Conductor connection direction to PCB 0 °



2086-1205

Pole number	Item No.	PU (SPU)
2	2086-1202	432
3	2086-1203	288
4	2086-1204	216
5	2086-1205	180
6	2086-1206	144
7	2086-1207	132
8	2086-1208	108 (1)
9	2086-1209	96
10	2086-1210	84
11	2086-1211	84
12	2086-1212	72

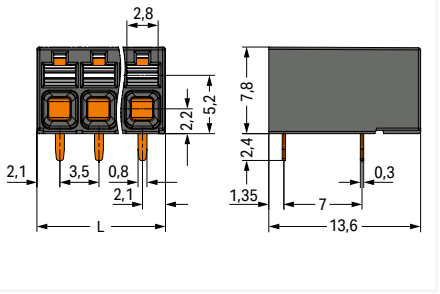

L = (pole no. – 1) x pin spacing + 4.2 mm

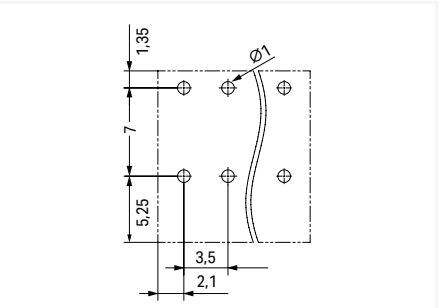

Conductor connection direction to PCB 90 °



2086-1105

Pole number	Item No.	PU
2	2086-1102	432
3	2086-1103	288
4	2086-1104	216
5	2086-1105	180
6	2086-1106	144
7	2086-1107	132
8	2086-1108	108
9	2086-1109	96
10	2086-1110	84
11	2086-1111	84
12	2086-1112	72

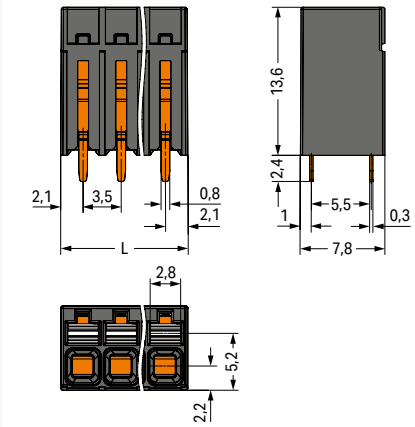

L = (pole no. – 1) x pin spacing + 4.2 mm

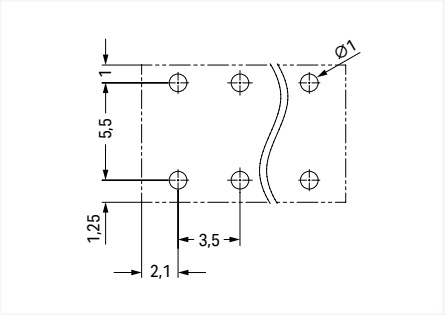

PU = packaging unit; SPU = subpackaging unit; Dimensions in mm

THR PCB terminal block ▸ 2086 Series

Push-in CAGE CLAMP® ▸ Actuation type: Push-button ▸ 1.5 mm² ▸ Pin spacing: 3.5 mm / 0.138 inches ▸ Solder pin arrangement: over the entire terminal strip (staggered) ▸ Color: black



- Ideal for compact device connection, panel feedthrough and tight spaces
- Push-in CAGE CLAMP® termination of solid and ferruled fine-stranded conductors
- SMD and THR variants available
- Push-button moves in direction of conductor connection
- Conductor connection and mating direction parallel or perpendicular to the PCB
- Optionally available with in-line or staggered pins (3.5 and 5 mm pin spacing)

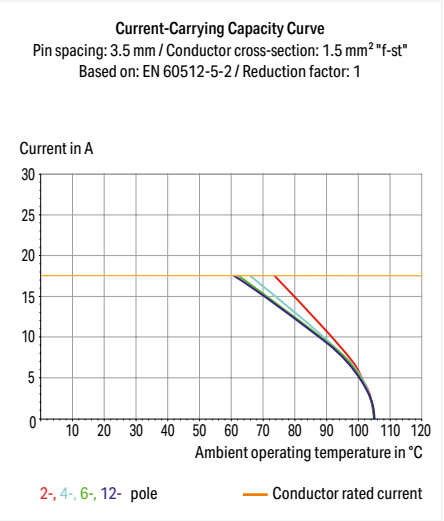

Electrical data			
Ratings per	**IEC/EN 60664-1**		
Overvoltage category	III	III	II
Pollution degree	3	2	2
Nominal voltage	250 V	320 V	630 V
Rated impulse withstand voltage	4 kV	4 kV	4 kV
Rated current	17.5 A	17.5 A	17.5 A
Approvals per	**UL 1059**		
Use group	B	C	D
Rated voltage	300 V	-	300 V
Rated current	14 A	-	10 A
Approvals per	**CSA**		
Use group	B	C	D
Rated voltage	300 V	-	300 V
Rated current	14 A	-	14 A

Connection Data	
Connection technology	Push-in CAGE CLAMP®
Strip length	8 … 9 mm / 0.31 … 0.35 inches
Solid conductor	0.14 … 1.5 mm² / 28 … 16 AWG
Fine-stranded conductor	0.14 … 1.5 mm² / 26 … 14 AWG
Fine-stranded conductor; with insulated ferrule	0.25 … 0.75 mm²
Fine-stranded conductor; with uninsulated ferrule	0.25 … 1.5 mm²

Material data	
Material group	I
Insulation material (main housing)	Polyphthalamide (PPA GF)
Flammability class per UL94	V0
Clamping spring material	Chrome-nickel spring steel (CrNi)
Contact material	Electrolytic copper (E_{Cu})
Contact Plating	Tin

Mechanical data	
Solder pin arrangement	over the entire terminal strip (staggered)
Number of solder pins per potential	1
Solder pin dimensions	0.3 x 0.8 mm
Plated through-hole diameter (THR)	1 $^{(+0.1)}$ mm

Environmental requirements	
Limit temperature range	-60 … +105 °C
Processing temperature	-35 … +60 °C
Continuous operating temperature	-60 … +105 °C

Note:
Application notes:
Suitable for lead-free, reflow-soldering profiles per DIN EN 61760-1 and IEC 60068-2-58 up to max. 260°C peak temperature. Due to application-specific variables (component configuration and orientation, type of soldering machine, solder paste), trial runs are recommended to ensure product and process compatibility under actual manufacturing conditions. The mechanical stability of a two-pole terminal strip (2086 Series) with alternating pin spacing is lower than that of a multi-pole terminal strip with alternating pin spacing or a terminal strip with double pin spacing when subjected to external forces, owing to its design. It must be ensured that, in the application, additional support, temporary restraint of the connected conductors, and corresponding operating instructions protect the terminal strip from excessive mechanical stress, such as torsional or bending forces, both during conductor connection and in use.

Ferrule	Page 1081
Test and measurement	Page 1088
Tool	Page 1072
See technical section for further information	
Approvals and corresponding ratings, visit www.wago.com	

THR PCB terminal block ▸ 2086 Series

Push-in CAGE CLAMP® ▸ Actuation type: Push-button ▸ 1.5 mm² ▸ Pin spacing: 3.5 mm / 0.138 inches ▸ Solder pin arrangement: over the entire terminal strip (staggered) ▸ Color: black

Solder pin length: 1.5 mm

Conductor connection direction to PCB 0 °

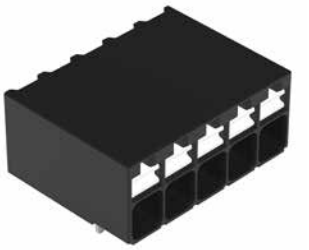

2086-1225/300-000

Pole number	Item No.	PU
2	2086-1222/300-000	432
3	2086-1223/300-000	288
4	2086-1224/300-000	216
5	2086-1225/300-000	180
6	2086-1226/300-000	144
7	2086-1227/300-000	132
8	2086-1228/300-000	108
9	2086-1229/300-000	96
10	2086-1230/300-000	84
11	2086-1231/300-000	84
12	2086-1232/300-000	72

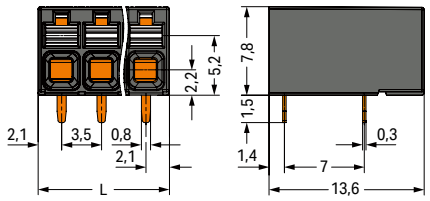

L = (pole no. – 1) x pin spacing + 4.2 mm

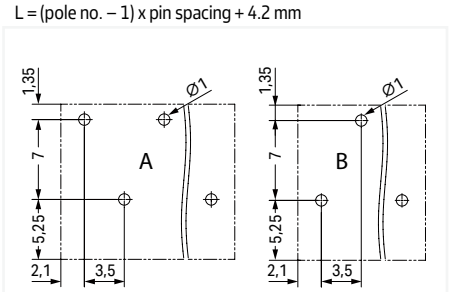

A = Even pole numbers
B = Odd pole numbers

Conductor connection direction to PCB 90 °



2086-1125/300-000

Pole number	Item No.	PU
2	2086-1122/300-000	432
3	2086-1123/300-000	288
4	2086-1124/300-000	216
5	2086-1125/300-000	180
6	2086-1126/300-000	144
7	2086-1127/300-000	132
8	2086-1128/300-000	108
9	2086-1129/300-000	96
10	2086-1130/300-000	84
11	2086-1131/300-000	84
12	2086-1132/300-000	72

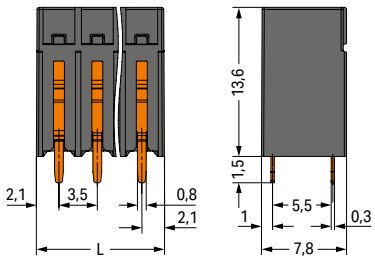

L = (pole no. – 1) x pin spacing + 4.2 mm

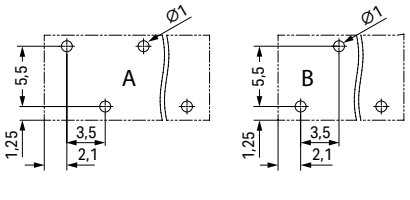

A = Even pole numbers
B = Odd pole numbers

PU = packaging unit; SPU = subpackaging unit; Dimensions in mm

THR PCB terminal block ▸ 2086 Series

Push-in CAGE CLAMP® ▸ Actuation type: Push-button ▸ 1.5 mm² ▸ Pin spacing: 3.5 mm / 0.138 inches ▸ Solder pin arrangement: over the entire terminal strip (staggered) ▸ Color: black

Solder pin length: 2.4 mm

Conductor connection direction to PCB 0 °



2086-1225

Pole number	Item No.	PU
2	2086-1222	432
3	2086-1223	288
4	2086-1224	216
5	2086-1225	180
6	2086-1226	144
7	2086-1227	132
8	2086-1228	108
9	2086-1229	96
10	2086-1230	84
11	2086-1231	84
12	2086-1232	72

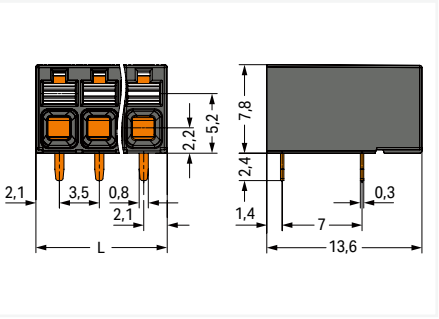

L = (pole no. – 1) x pin spacing + 4.2 mm

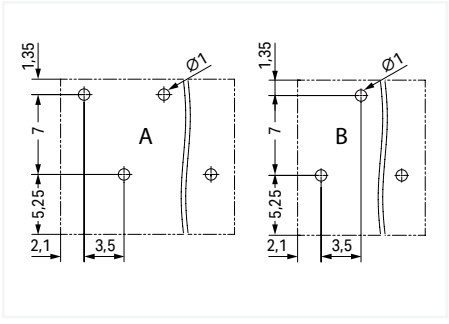

A = Even pole numbers
B = Odd pole numbers

Conductor connection direction to PCB 90 °



2086-1125

Pole number	Item No.	PU
2	2086-1122	432
3	2086-1123	288
4	2086-1124	216
5	2086-1125	180
6	2086-1126	144
7	2086-1127	132
8	2086-1128	108
9	2086-1129	96
10	2086-1130	84
11	2086-1131	84
12	2086-1132	72

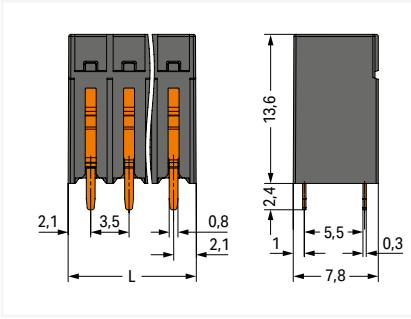

L = (pole no. – 1) x pin spacing + 4.2 mm

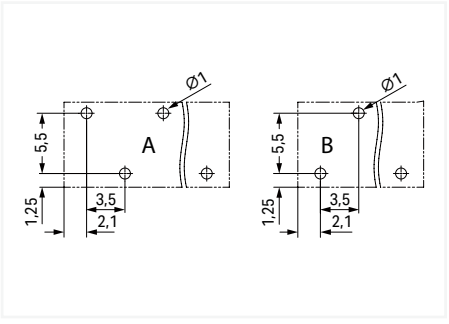

A = Even pole numbers
B = Odd pole numbers

PU = packaging unit; SPU = subpackaging unit; Dimensions in mm

THR PCB terminal block ▸ 2086 Series

Push-in CAGE CLAMP® ▸ Actuation type: Push-button ▸ 1.5 mm² ▸ Pin spacing: 3.5 mm / 0.138 inches ▸ Suitable for automated assembly ▸ Solder pin arrangement: over the entire terminal strip (in-line) ▸ Color: black



- Ideal for compact device connection, panel feedthrough and tight spaces
- Push-in CAGE CLAMP® termination of solid and ferruled fine-stranded conductors
- SMD and THR variants available
- Push-button moves in direction of conductor connection
- Conductor connection and mating direction parallel or perpendicular to the PCB
- Optionally available with in-line or staggered pins (3.5 and 5 mm pin spacing)

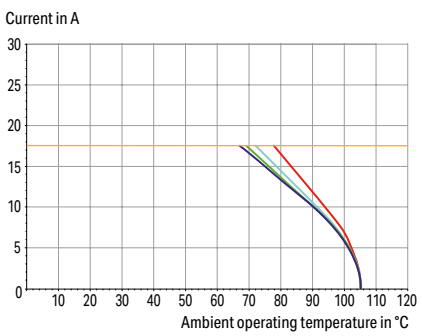

Electrical data			
Ratings per	**IEC/EN 60664-1**		
Overvoltage category	III	III	II
Pollution degree	3	2	2
Nominal voltage	160 V	160 V	320 V
Rated impulse withstand voltage	2.5 kV	2.5 kV	2.5 kV
Rated current	17.5 A	17.5 A	17.5 A
Approvals per	**UL 1059**		
Use group	B	C	D
Rated voltage	300 V	-	300 V
Rated current	14 A	-	10 A
Approvals per	**CSA**		
Use group	B	C	D
Rated voltage	300 V	-	300 V
Rated current	14 A	-	14 A

Connection Data	
Connection technology	Push-in CAGE CLAMP®
Strip length	8 … 9 mm / 0.31 … 0.35 inches
Solid conductor	0.14 … 1.5 mm² / 28 … 16 AWG
Fine-stranded conductor	0.14 … 1.5 mm² / 26 … 14 AWG
Fine-stranded conductor; with insulated ferrule	0.25 … 0.75 mm²
Fine-stranded conductor; with uninsulated ferrule	0.25 … 1.5 mm²

Material data	
Material group	I
Insulation material (main housing)	Polyphthalamide (PPA GF)
Flammability class per UL94	V0
Clamping spring material	Chrome-nickel spring steel (CrNi)
Contact material	Electrolytic copper (E_{Cu})
Contact Plating	Tin

Mechanical data	
Solder pin arrangement	over the entire terminal strip (in-line)
Number of solder pins per potential	2
Solder pin dimensions	0.3 x 0.8 mm
Plated through-hole diameter (THR)	1 $^{(+0.1)}$ mm
Reel diameter of tape-and-reel packaging	380 mm

Environmental requirements	
Limit temperature range	-60 … +105 °C
Processing temperature	-35 … +60 °C
Continuous operating temperature	-60 … +105 °C

Note:
Application notes:
Suitable for lead-free, reflow-soldering profiles per DIN EN 61760-1 and IEC 60068-2-58 up to max. 260°C peak temperature. Due to application-specific variables (component configuration and orientation, type of soldering machine, solder paste), trial runs are recommended to ensure product and process compatibility under actual manufacturing conditions.

Ferrule	Page 1081
Test and measurement	Page 1088
Tool	Page 1072
See technical section for further information	
Approvals and corresponding ratings, visit www.wago.com	

THR PCB terminal block ▸ 2086 Series

Push-in CAGE CLAMP® ▸ Actuation type: Push-button ▸ 1.5 mm² ▸ Pin spacing: 3.5 mm / 0.138 inches ▸ Suitable for automated assembly ▸ Solder pin arrangement: over the entire terminal strip (in-line) ▸ Color: black

Solder pin length: 1.5 mm

Conductor connection direction to PCB 0 °



2086-1205/300-000/997-605

Pole number	Tape width	Item No.	PU (SPU)
2	24 mm	**2086-1202/300-000/997-604**	3735 (415)
3	32 mm	**2086-1203/300-000/997-605**	2905 (415)
4	32 mm	**2086-1204/300-000/997-605**	2905 (415)
5	32 mm	**2086-1205/300-000/997-605**	2905 (415)
6	56 mm	**2086-1206/300-000/997-607**	1660 (415)
7	56 mm	**2086-1207/300-000/997-607**	1660 (415)
8	56 mm	**2086-1208/300-000/997-607**	1660 (415)
9	56 mm	**2086-1209/300-000/997-607**	1660 (415)
10	56 mm	**2086-1210/300-000/997-607**	1660 (415)
11	56 mm	**2086-1211/300-000/997-607**	1660 (415)
12	56 mm	**2086-1212/300-000/997-607**	1660 (415)

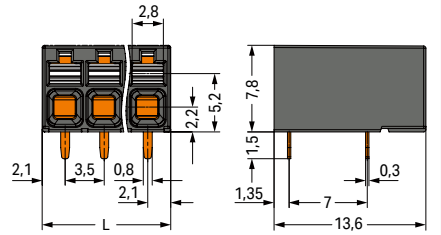

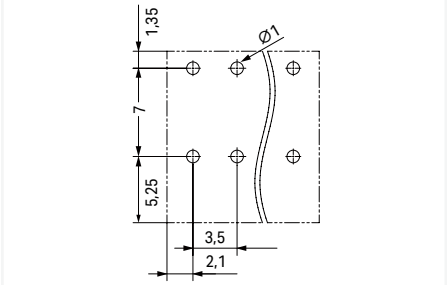

L = (pole no. – 1) x pin spacing + 4.2 mm

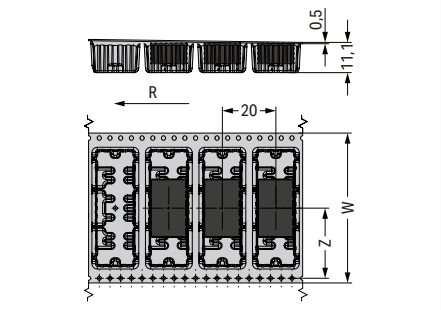

W = Tape width
R = Feed direction
Pole number 3, 5: Z = 13.95 mm
Pole number 4: Z = 12.2 mm
Pole number 6, 8, 10, 12: Z = 26.2 mm
Pole number 7, 9, 11: Z = 24.45 mm

PU = packaging unit; SPU = subpackaging unit; Dimensions in mm

THR PCB terminal block ▸ 2086 Series

Push-in CAGE CLAMP® ▸ Actuation type: Push-button ▸ 1.5 mm² ▸ Pin spacing: 3.5 mm / 0.138 inches ▸ Suitable for automated assembly ▸ Solder pin arrangement: over the entire terminal strip (in-line) ▸ Color: black

Solder pin length: 1.5 mm

Conductor connection direction to PCB 90 °



2086-1105/300-000/997-605

Pole number	Tape width	Item No.	PU (SPU)
2	24 mm	**2086-1102/300-000/997-604**	2115 (235)
3	32 mm	**2086-1103/300-000/997-605**	1645 (235)
4	32 mm	**2086-1104/300-000/997-605**	1645 (235)
5	32 mm	**2086-1105/300-000/997-605**	1645 (235)
6	56 mm	**2086-1106/300-000/997-607**	940 (235)
7	56 mm	**2086-1107/300-000/997-607**	940 (235)
8	56 mm	**2086-1108/300-000/997-607**	940 (235)
9	56 mm	**2086-1109/300-000/997-607**	940 (235)
10	56 mm	**2086-1110/300-000/997-607**	940 (235)
11	56 mm	**2086-1111/300-000/997-607**	940 (235)
12	56 mm	**2086-1112/300-000/997-607**	940 (235)

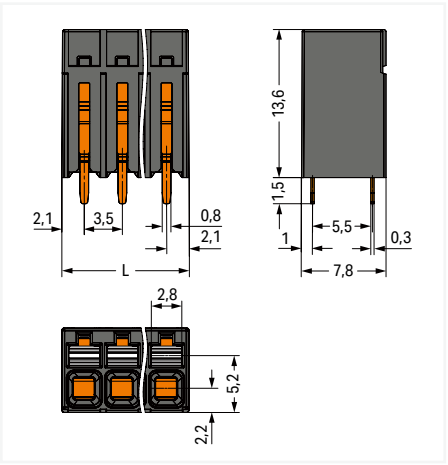

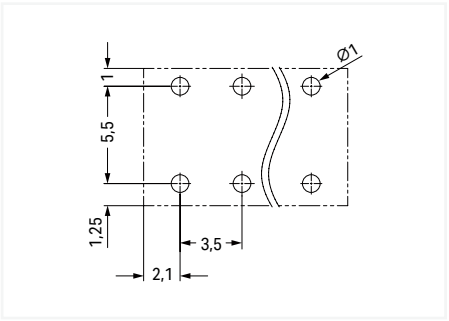

L = (pole no. – 1) x pin spacing + 4.2 mm

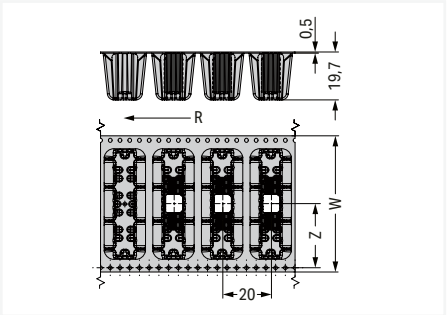

W= Tape width
R = Feed direction
Pole no. 2: Z = 11.5 mm
Pole no. 3 ... 5: Z = 12.4 mm
Pole no. 6 ... 12: Z = 26.4 mm

PU = packaging unit; SPU = subpackaging unit; Dimensions in mm

THR PCB terminal block ▸ 2086 Series

Push-in CAGE CLAMP® ▸ Actuation type: Push-button ▸ 1.5 mm² ▸ Pin spacing: 3.5 mm / 0.138 inches ▸ Suitable for automated assembly ▸ Solder pin arrangement: over the entire terminal strip (in-line) ▸ Color: black

Solder pin length: 2.4 mm

Conductor connection direction to PCB 0 °



2086-1205/997-605

Pole number	Tape width	Item No.	PU (SPU)
2	24 mm	**2086-1202/997-604**	3735 (415)
3	32 mm	**2086-1203/997-605**	2905 (415)
4	32 mm	**2086-1204/997-605**	2905 (415)
5	32 mm	**2086-1205/997-605**	2905 (415)
6	56 mm	**2086-1206/997-607**	1660 (415)
7	56 mm	**2086-1207/997-607**	1660 (415)
8	56 mm	**2086-1208/997-607**	1660 (415)
9	56 mm	**2086-1209/997-607**	1660 (415)
10	56 mm	**2086-1210/997-607**	1660 (415)
11	56 mm	**2086-1211/997-607**	1660 (415)
12	56 mm	**2086-1212/997-607**	1660 (415)

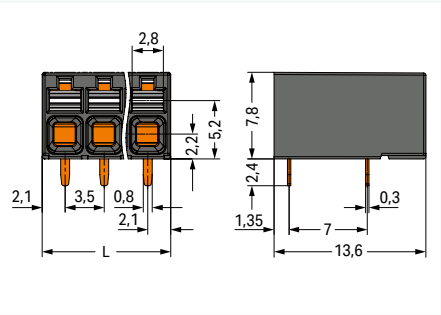

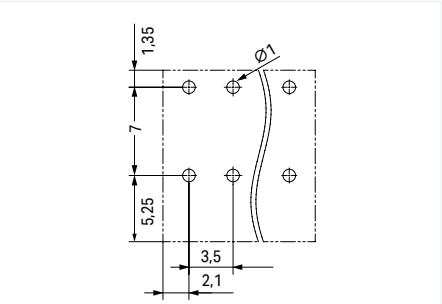

L = (pole no. – 1) x pin spacing + 4.2 mm

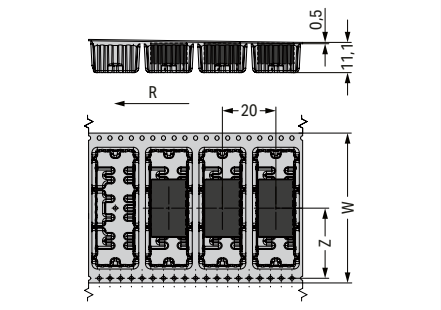

W = Tape width
R = Feed direction
Pole number 3, 5: Z = 13.95 mm
Pole number 4: Z = 12.2 mm
Pole number 6, 8, 10, 12: Z = 26.2 mm
Pole number 7, 9, 11: Z = 24.45 mm

PU = packaging unit; SPU = subpackaging unit; Dimensions in mm

THR PCB terminal block ▸ 2086 Series

Push-in CAGE CLAMP® ▸ Actuation type: Push-button ▸ 1.5 mm² ▸ Pin spacing: 3.5 mm / 0.138 inches ▸ Suitable for automated assembly ▸ Solder pin arrangement: over the entire terminal strip (in-line) ▸ Color: black

Solder pin length: 2.4 mm

Conductor connection direction to PCB 90 °



2086-1105/997-605

Pole number	Tape width	Item No.	PU (SPU)
2	24 mm	**2086-1102/997-604**	2115 (235)
3	32 mm	**2086-1103/997-605**	1645 (235)
4	32 mm	**2086-1104/997-605**	1645 (235)
5	32 mm	**2086-1105/997-605**	1645 (235)
6	56 mm	**2086-1106/997-607**	940 (235)
7	56 mm	**2086-1107/997-607**	940 (235)
8	56 mm	**2086-1108/997-607**	940 (235)
9	56 mm	**2086-1109/997-607**	940 (235)
10	56 mm	**2086-1110/997-607**	940 (235)
11	56 mm	**2086-1111/997-607**	940 (235)
12	56 mm	**2086-1112/997-607**	940 (235)

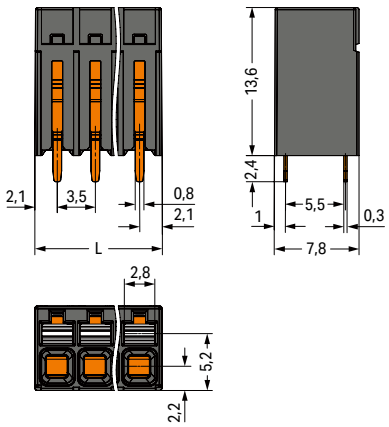

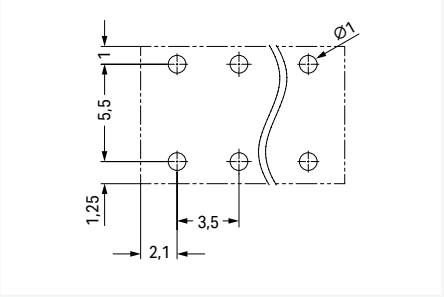

L = (pole no. – 1) x pin spacing + 4.2 mm

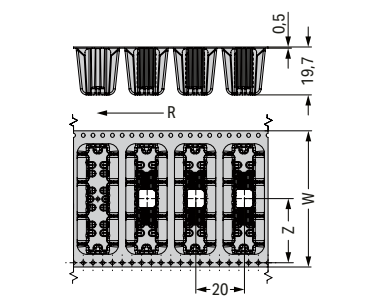

W= Tape width
R = Feed direction
Pole no. 2: Z = 11.5 mm
Pole no. 3 ... 5: Z = 12.4 mm
Pole no. 6 ... 12: Z = 26.4 mm

PU = packaging unit; SPU = subpackaging unit; Dimensions in mm

THR PCB terminal block ▸ 2086 Series

Push-in CAGE CLAMP® ▸ Actuation type: Push-button ▸ 1.5 mm² ▸ Pin spacing: 3.5 mm / 0.138 inches ▸ Suitable for automated assembly ▸ Solder pin arrangement: over the entire terminal strip (staggered) ▸ Color: black



- Ideal for compact device connection, panel feedthrough and tight spaces
- Push-in CAGE CLAMP® termination of solid and ferruled fine-stranded conductors
- SMD and THR variants available
- Push-button moves in direction of conductor connection
- Conductor connection and mating direction parallel or perpendicular to the PCB
- Optionally available with in-line or staggered pins (3.5 and 5 mm pin spacing)

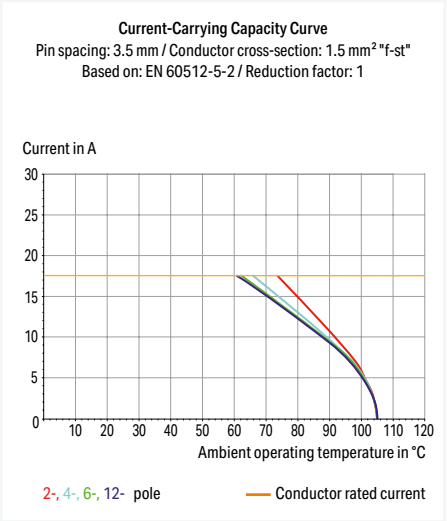

Electrical data			
Ratings per	**IEC/EN 60664-1**		
Overvoltage category	III	III	II
Pollution degree	3	2	2
Nominal voltage	250 V	320 V	630 V
Rated impulse withstand voltage	4 kV	4 kV	4 kV
Rated current	17.5 A	17.5 A	17.5 A
Approvals per	**UL 1059**		
Use group	B	C	D
Rated voltage	300 V	-	300 V
Rated current	14 A	-	10 A
Approvals per	**CSA**		
Use group	B	C	D
Rated voltage	300 V	-	300 V
Rated current	14 A	-	14 A

Connection Data	
Connection technology	Push-in CAGE CLAMP®
Strip length	8 … 9 mm / 0.31 … 0.35 inches
Solid conductor	0.14 … 1.5 mm² / 28 … 16 AWG
Fine-stranded conductor	0.14 … 1.5 mm² / 26 … 14 AWG
Fine-stranded conductor; with insulated ferrule	0.25 … 0.75 mm²
Fine-stranded conductor; with uninsulated ferrule	0.25 … 1.5 mm²

Material data	
Material group	I
Insulation material (main housing)	Polyphthalamide (PPA GF)
Flammability class per UL94	V0
Clamping spring material	Chrome-nickel spring steel (CrNi)
Contact material	Electrolytic copper (E_{Cu})
Contact Plating	Tin

Mechanical data	
Solder pin arrangement	over the entire terminal strip (staggered)
Number of solder pins per potential	1
Solder pin dimensions	0.3 x 0.8 mm
Plated through-hole diameter (THR)	1 $^{(+0.1)}$ mm
Reel diameter of tape-and-reel packaging	380 mm

Environmental requirements	
Limit temperature range	-60 … +105 °C
Processing temperature	-35 … +60 °C
Continuous operating temperature	-60 … +105 °C

Note:
Application notes:
Suitable for lead-free, reflow-soldering profiles per DIN EN 61760-1 and IEC 60068-2-58 up to max. 260°C peak temperature. Due to application-specific variables (component configuration and orientation, type of soldering machine, solder paste), trial runs are recommended to ensure product and process compatibility under actual manufacturing conditions. The mechanical stability of a two-pole terminal strip (2086 Series) with alternating pin spacing is lower than that of a multi-pole terminal strip with alternating pin spacing or a terminal strip with double pin spacing when subjected to external forces, owing to its design. It must be ensured that, in the application, additional support, temporary restraint of the connected conductors, and corresponding operating instructions protect the terminal strip from excessive mechanical stress, such as torsional or bending forces, both during conductor connection and in use.

Ferrule	Page 1081
Test and measurement	Page 1088
Tool	Page 1072
See technical section for further information	
Approvals and corresponding ratings, visit www.wago.com	

THR PCB terminal block ▸ 2086 Series

Push-in CAGE CLAMP® ▸ Actuation type: Push-button ▸ 1.5 mm² ▸ Pin spacing: 3.5 mm / 0.138 inches ▸ Suitable for automated assembly ▸ Solder pin arrangement: over the entire terminal strip (staggered) ▸ Color: black

Solder pin length: 1.5 mm

Conductor connection direction to PCB 0 °



2086-1225/300-000/997-605

Pole number	Tape width	Item No.	PU (SPU)
2	24 mm	**2086-1222/300-000/997-604**	3735 (415)
3	32 mm	**2086-1223/300-000/997-605**	2905 (415)
4	32 mm	**2086-1224/300-000/997-605**	2905 (415)
5	32 mm	**2086-1225/300-000/997-605**	2905 (415)
6	56 mm	**2086-1226/300-000/997-607**	1660 (415)
7	56 mm	**2086-1227/300-000/997-607**	1660 (415)
8	56 mm	**2086-1228/300-000/997-607**	1660 (415)
9	56 mm	**2086-1229/300-000/997-607**	1660 (415)
10	56 mm	**2086-1230/300-000/997-607**	1660 (415)
11	56 mm	**2086-1231/300-000/997-607**	1660 (415)
12	56 mm	**2086-1232/300-000/997-607**	1660 (415)

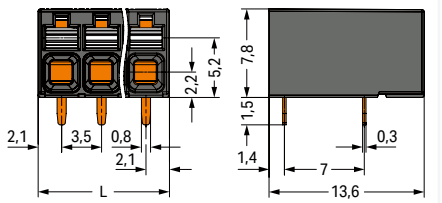

L = (pole no. – 1) x pin spacing + 4.2 mm

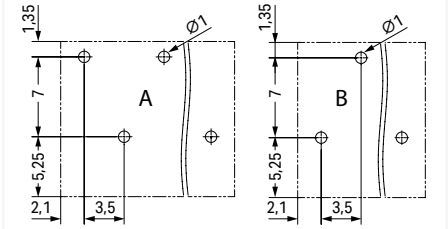

A = Even pole numbers
B = Odd pole numbers

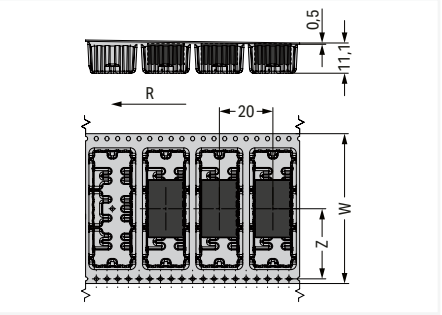

W = Tape width
R = Feed direction
Pole number 3, 5: Z = 13.95 mm
Pole number 4: Z = 12.2 mm
Pole number 6, 8, 10, 12: Z = 26.2 mm
Pole number 7, 9, 11: Z = 24.45 mm

PU = packaging unit; SPU = subpackaging unit; Dimensions in mm

THR PCB terminal block ▸ 2086 Series

Push-in CAGE CLAMP® ▸ Actuation type: Push-button ▸ 1.5 mm² ▸ Pin spacing: 3.5 mm / 0.138 inches ▸ Suitable for automated assembly ▸ Solder pin arrangement: over the entire terminal strip (staggered) ▸ Color: black

Solder pin length: 1.5 mm

Conductor connection direction to PCB 90 °



2086-1125/300-000/997-605

Pole number	Tape width	Item No.	PU (SPU)
2	24 mm	**2086-1122/300-000/997-604**	2115 (235)
3	32 mm	**2086-1123/300-000/997-605**	1645 (235)
4	32 mm	**2086-1124/300-000/997-605**	1645 (235)
5	32 mm	**2086-1125/300-000/997-605**	1645 (235)
6	56 mm	**2086-1126/300-000/997-607**	940 (235)
7	56 mm	**2086-1127/300-000/997-607**	940 (235)
8	56 mm	**2086-1128/300-000/997-607**	940 (235)
9	56 mm	**2086-1129/300-000/997-607**	940 (235)
10	56 mm	**2086-1130/300-000/997-607**	940 (235)
11	56 mm	**2086-1131/300-000/997-607**	940 (235)
12	56 mm	**2086-1132/300-000/997-607**	940 (235)

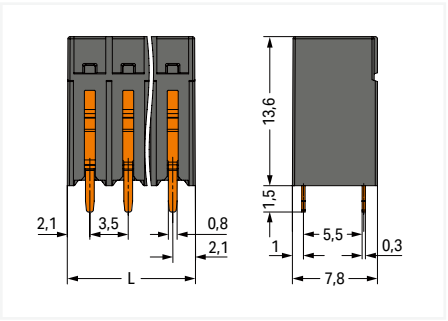

L = (pole no. – 1) x pin spacing + 4.2 mm

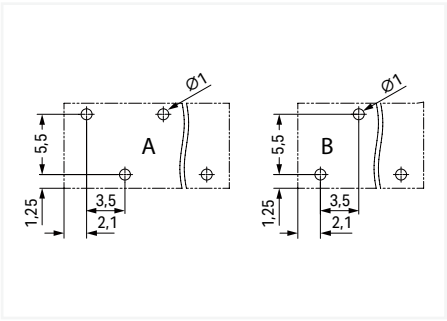

A = Even pole numbers
B = Odd pole numbers

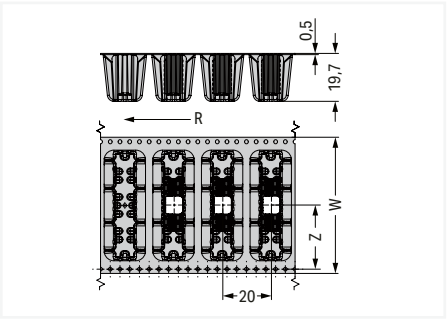

W= Tape width
R = Feed direction
Pole no. 2: Z = 11.5 mm
Pole no. 3 ... 5: Z = 12.4 mm
Pole no. 6 ... 12: Z = 26.4 mm

PU = packaging unit; SPU = subpackaging unit; Dimensions in mm

THR PCB terminal block ▸ 2086 Series

Push-in CAGE CLAMP® ▸ Actuation type: Push-button ▸ 1.5 mm² ▸ Pin spacing: 3.5 mm / 0.138 inches ▸ Suitable for automated assembly ▸ Solder pin arrangement: over the entire terminal strip (staggered) ▸ Color: black

Solder pin length: 2.4 mm

Conductor connection direction to PCB 0 °



2086-1225/997-605

Pole number	Tape width	Item No.	PU (SPU)
2	24 mm	**2086-1222/997-604**	3735 (415)
3	32 mm	**2086-1223/997-605**	2905 (415)
4	32 mm	**2086-1224/997-605**	2905 (415)
5	32 mm	**2086-1225/997-605**	2905 (415)
6	56 mm	**2086-1226/997-607**	1660 (415)
7	56 mm	**2086-1227/997-607**	1660 (415)
8	56 mm	**2086-1228/997-607**	1660 (415)
9	56 mm	**2086-1229/997-607**	1660 (415)
10	56 mm	**2086-1230/997-607**	1660 (415)
11	56 mm	**2086-1231/997-607**	1660 (415)
12	56 mm	**2086-1232/997-607**	1660 (415)

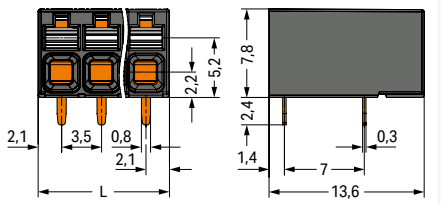

L = (pole no. – 1) x pin spacing + 4.2 mm

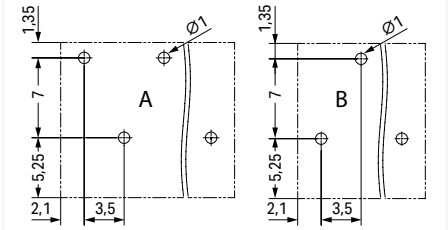

A = Even pole numbers
B = Odd pole numbers

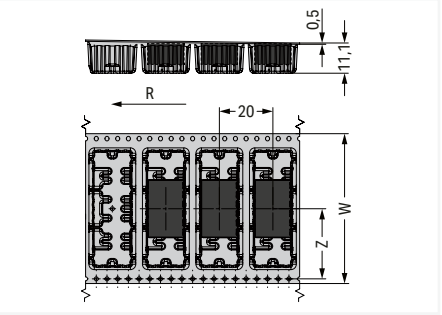

W = Tape width
R = Feed direction
Pole number 3, 5: Z = 13.95 mm
Pole number 4: Z = 12.2 mm
Pole number 6, 8, 10, 12: Z = 26.2 mm
Pole number 7, 9, 11: Z = 24.45 mm

PU = packaging unit; SPU = subpackaging unit; Dimensions in mm

THR PCB terminal block ▸ 2086 Series

Push-in CAGE CLAMP® ▸ Actuation type: Push-button ▸ 1.5 mm² ▸ Pin spacing: 3.5 mm / 0.138 inches ▸ Suitable for automated assembly ▸ Solder pin arrangement: over the entire terminal strip (staggered) ▸ Color: black

Solder pin length: 2.4 mm

Conductor connection direction to PCB 90 °

2



2086-1125/997-605

Pole number	Tape width	Item No.	PU (SPU)
2	24 mm	**2086-1122/997-604**	2115 (235)
3	32 mm	**2086-1123/997-605**	1645 (235)
4	32 mm	**2086-1124/997-605**	1645 (235)
5	32 mm	**2086-1125/997-605**	1645 (235)
6	56 mm	**2086-1126/997-607**	940 (235)
7	56 mm	**2086-1127/997-607**	940 (235)
8	56 mm	**2086-1128/997-607**	940 (235)
9	56 mm	**2086-1129/997-607**	940 (235)
10	56 mm	**2086-1130/997-607**	940 (235)
11	56 mm	**2086-1131/997-607**	940 (235)
12	56 mm	**2086-1132/997-607**	940 (235)

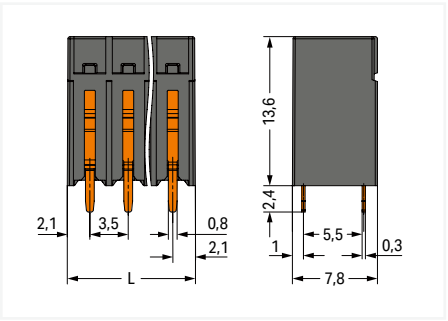

L = (pole no. – 1) x pin spacing + 4.2 mm

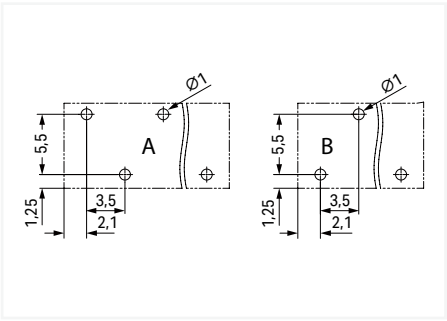

A = Even pole numbers
B = Odd pole numbers

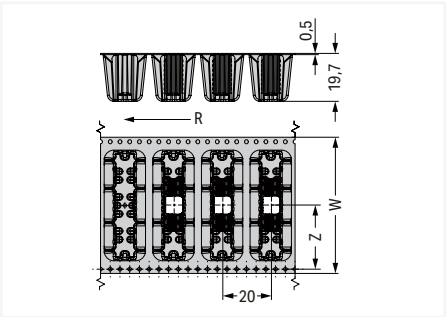

W= Tape width
R = Feed direction
Pole no. 2: Z = 11.5 mm
Pole no. 3 ... 5: Z = 12.4 mm
Pole no. 6 ... 12: Z = 26.4 mm

PU = packaging unit; SPU = subpackaging unit; Dimensions in mm

THR PCB terminal block ▸ 2086 Series

Push-in CAGE CLAMP® ▸ Actuation type: Push-button ▸ 1.5 mm² ▸ Pin spacing: 5 mm / 0.197 inches ▸ Solder pin arrangement: over the entire terminal strip (in-line) ▸ Color: black



- Ideal for compact device connection, panel feedthrough and tight spaces
- Push-in CAGE CLAMP® termination of solid and ferruled fine-stranded conductors
- SMD and THR variants available
- Push-button moves in direction of conductor connection
- Conductor connection and mating direction parallel or perpendicular to the PCB
- Optionally available with in-line or staggered pins (3.5 and 5 mm pin spacing)

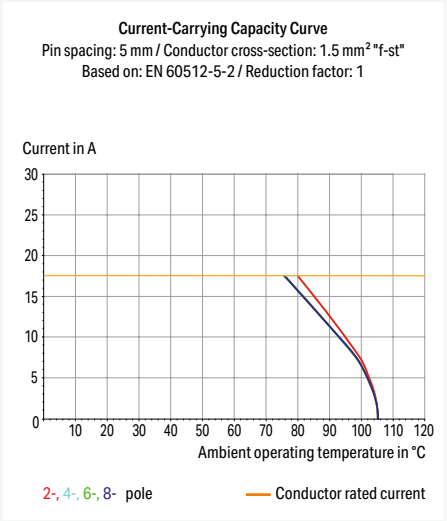

Electrical data			
Ratings per	**IEC/EN 60664-1**		
Overvoltage category	III	III	II
Pollution degree	3	2	2
Nominal voltage	320 V	320 V	630 V
Rated impulse withstand voltage	4 kV	4 kV	4 kV
Rated current	17.5 A	17.5 A	17.5 A
Approvals per	**UL 1059**		
Use group	B	C	D
Rated voltage	300 V	-	300 V
Rated current	14 A	-	10 A
Approvals per	**CSA**		
Use group	B	C	D
Rated voltage	300 V	-	300 V
Rated current	14 A	-	14 A

Connection Data	
Connection technology	Push-in CAGE CLAMP®
Strip length	8 … 9 mm / 0.31 … 0.35 inches
Solid conductor	0.14 … 1.5 mm² / 28 … 16 AWG
Fine-stranded conductor	0.14 … 1.5 mm² / 26 … 14 AWG
Fine-stranded conductor; with insulated ferrule	0.25 … 0.75 mm²
Fine-stranded conductor; with uninsulated ferrule	0.25 … 1.5 mm²

Material data	
Material group	I
Insulation material (main housing)	Polyphthalamide (PPA GF)
Flammability class per UL94	V0
Clamping spring material	Chrome-nickel spring steel (CrNi)
Contact material	Electrolytic copper (E_{Cu})
Contact Plating	Tin

Mechanical data	
Solder pin arrangement	over the entire terminal strip (in-line)
Number of solder pins per potential	2
Solder pin dimensions	0.3 x 0.8 mm
Plated through-hole diameter (THR)	1 $^{(+0.1)}$ mm

Environmental requirements	
Limit temperature range	-60 … +105 °C
Processing temperature	-35 … +60 °C
Continuous operating temperature	-60 … +105 °C

Note:
Application notes:
Suitable for lead-free, reflow-soldering profiles per DIN EN 61760-1 and IEC 60068-2-58 up to max. 260°C peak temperature. Due to application-specific variables (component configuration and orientation, type of soldering machine, solder paste), trial runs are recommended to ensure product and process compatibility under actual manufacturing conditions.

Ferrule	Page 1081
Test and measurement	Page 1088
Tool	Page 1072
See technical section for further information	
Approvals and corresponding ratings, visit www.wago.com	

THR PCB terminal block ▸ 2086 Series

Push-in CAGE CLAMP® ▸ Actuation type: Push-button ▸ 1.5 mm² ▸ Pin spacing: 5 mm / 0.197 inches ▸ Solder pin arrangement: over the entire terminal strip (in-line) ▸ Color: black

Solder pin length: 1.5 mm

Conductor connection direction to PCB 0 °

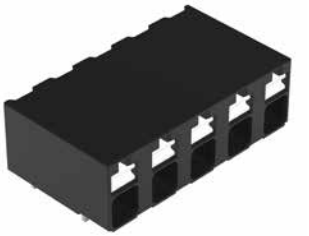

2086-3205/300-000

Pole number	Item No.	PU
2	2086-3202/300-000	360
3	2086-3203/300-000	228
4	2086-3204/300-000	168
5	2086-3205/300-000	132
6	2086-3206/300-000	108
7	2086-3207/300-000	96
8	2086-3208/300-000	84

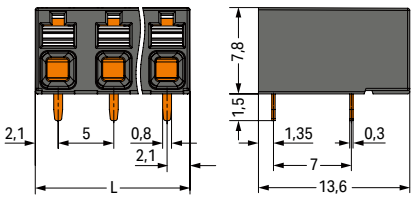

L = (pole no. – 1) x pin spacing + 4.2 mm

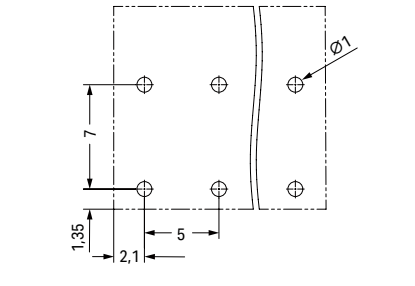

Conductor connection direction to PCB 90 °



2086-3105/300-000

Pole number	Item No.	PU
2	2086-3102/300-000	360
3	2086-3103/300-000	228
4	2086-3104/300-000	168
5	2086-3105/300-000	132
6	2086-3106/300-000	108
7	2086-3107/300-000	96
8	2086-3108/300-000	84

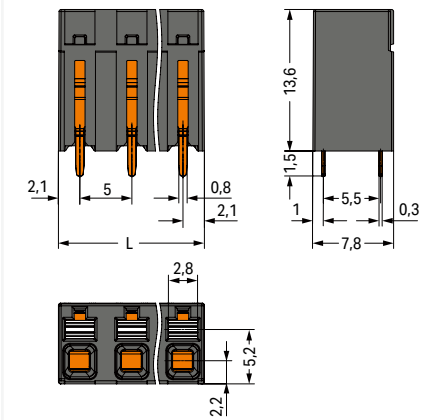

L = (pole no. – 1) x pin spacing + 4.2 mm

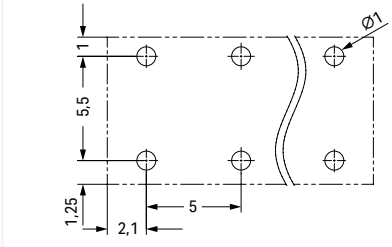

PU = packaging unit; SPU = subpackaging unit; Dimensions in mm

THR PCB terminal block ▸ 2086 Series

Push-in CAGE CLAMP® ▸ Actuation type: Push-button ▸ 1.5 mm² ▸ Pin spacing: 5 mm / 0.197 inches ▸ Solder pin arrangement: over the entire terminal strip (in-line) ▸ Color: black

Solder pin length: 2.4 mm

Conductor connection direction to PCB 0 °



2086-3205

Pole number	Item No.	PU (SPU)
2	2086-3202	360
3	2086-3203	228
4	2086-3204	168 (1)
5	2086-3205	132
6	2086-3206	108
7	2086-3207	96
8	2086-3208	84

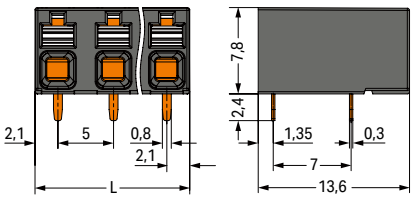

L = (pole no. – 1) x pin spacing + 4.2 mm

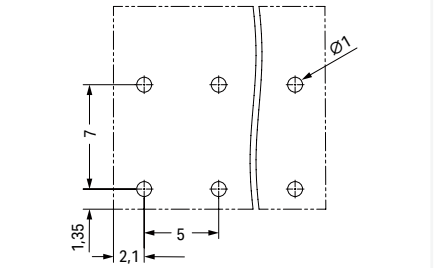

Conductor connection direction to PCB 90 °



2086-3105

Pole number	Item No.	PU (SPU)
2	2086-3102	360
3	2086-3103	228
4	2086-3104	168 (1)
5	2086-3105	132
6	2086-3106	108
7	2086-3107	96
8	2086-3108	84

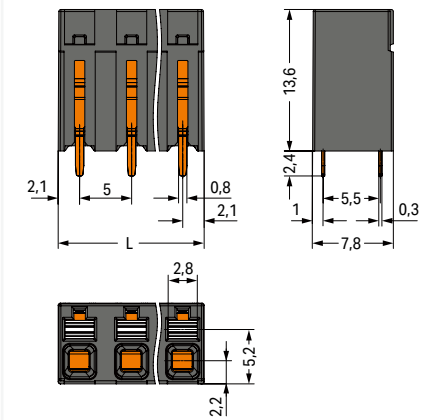

L = (pole no. – 1) x pin spacing + 4.2 mm

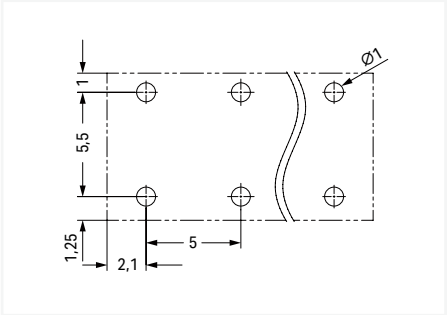

PU = packaging unit; SPU = subpackaging unit; Dimensions in mm

THR PCB terminal block ▸ 2086 Series

Push-in CAGE CLAMP® ▸ Actuation type: Push-button ▸ 1.5 mm² ▸ Pin spacing: 5 mm / 0.197 inches ▸ Solder pin arrangement: over the entire terminal strip (staggered) ▸ Color: black



- Ideal for compact device connection, panel feedthrough and tight spaces
- Push-in CAGE CLAMP® termination of solid and ferruled fine-stranded conductors
- SMD and THR variants available
- Push-button moves in direction of conductor connection
- Conductor connection and mating direction parallel or perpendicular to the PCB
- Optionally available with in-line or staggered pins (3.5 and 5 mm pin spacing)

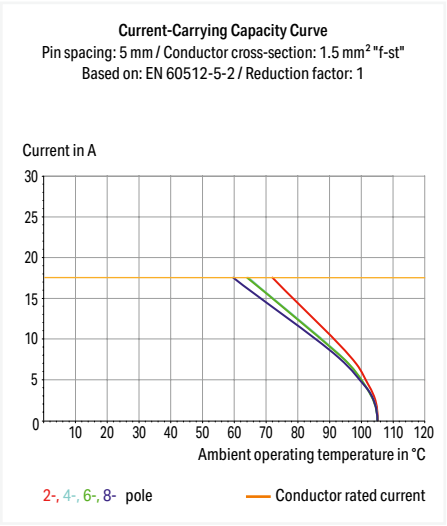

Electrical data			
Ratings per	**IEC/EN 60664-1**		
Overvoltage category	III	III	II
Pollution degree	3	2	2
Nominal voltage	500 V	630 V	1000 V
Rated impulse withstand voltage	6 kV	6 kV	6 kV
Rated current	17.5 A	17.5 A	17.5 A
Approvals per	**UL 1059**		
Use group	B	C	D
Rated voltage	300 V	-	300 V
Rated current	14 A	-	10 A
Approvals per	**CSA**		
Use group	B	C	D
Rated voltage	300 V	-	300 V
Rated current	14 A	-	14 A

Connection Data	
Connection technology	Push-in CAGE CLAMP®
Strip length	8 … 9 mm / 0.31 … 0.35 inches
Solid conductor	0.14 … 1.5 mm² / 28 … 16 AWG
Fine-stranded conductor	0.14 … 1.5 mm² / 26 … 14 AWG
Fine-stranded conductor; with insulated ferrule	0.25 … 0.75 mm²
Fine-stranded conductor; with uninsulated ferrule	0.25 … 1.5 mm²

Material data	
Material group	I
Insulation material (main housing)	Polyphthalamide (PPA GF)
Flammability class per UL94	V0
Clamping spring material	Chrome-nickel spring steel (CrNi)
Contact material	Electrolytic copper (E_{Cu})
Contact Plating	Tin

Mechanical data	
Solder pin arrangement	over the entire terminal strip (staggered)
Number of solder pins per potential	1
Solder pin dimensions	0.3 x 0.8 mm
Plated through-hole diameter (THR)	1 $^{(+0.1)}$ mm

Environmental requirements	
Limit temperature range	-60 … +105 °C
Processing temperature	-35 … +60 °C
Continuous operating temperature	-60 … +105 °C

Note:
Application notes:
Suitable for lead-free, reflow-soldering profiles per DIN EN 61760-1 and IEC 60068-2-58 up to max. 260°C peak temperature. Due to application-specific variables (component configuration and orientation, type of soldering machine, solder paste), trial runs are recommended to ensure product and process compatibility under actual manufacturing conditions. The mechanical stability of a two-pole terminal strip (2086 Series) with alternating pin spacing is lower than that of a multi-pole terminal strip with alternating pin spacing or a terminal strip with double pin spacing when subjected to external forces, owing to its design. It must be ensured that, in the application, additional support, temporary restraint of the connected conductors, and corresponding operating instructions protect the terminal strip from excessive mechanical stress, such as torsional or bending forces, both during conductor connection and in use.

Ferrule	Page 1081
Test and measurement	Page 1088
Tool	Page 1072
See technical section for further information	
Approvals and corresponding ratings, visit www.wago.com	

THR PCB terminal block ▸ 2086 Series

Push-in CAGE CLAMP® ▸ Actuation type: Push-button ▸ 1.5 mm² ▸ Pin spacing: 5 mm / 0.197 inches ▸ Solder pin arrangement: over the entire terminal strip (staggered) ▸ Color: black

Solder pin length: 1.5 mm

Conductor connection direction to PCB 0 °

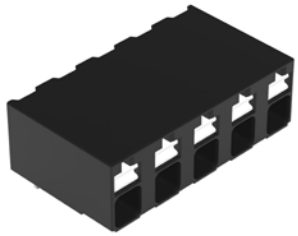

2086-3225/300-000

Pole number	Item No.	PU
2	2086-3222/300-000	360
3	2086-3223/300-000	228
4	2086-3224/300-000	168
5	2086-3225/300-000	132
6	2086-3226/300-000	108
7	2086-3227/300-000	96
8	2086-3228/300-000	84

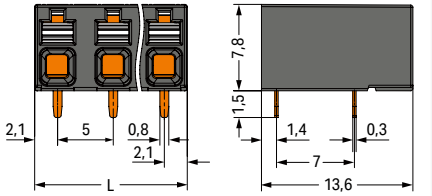

L = (pole no. – 1) x pin spacing + 4.2 mm

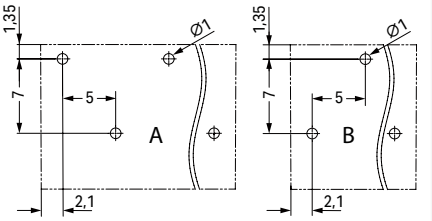

A = Even pole numbers
B = Odd pole numbers

Conductor connection direction to PCB 90 °



2086-3125/300-000

Pole number	Item No.	PU
2	2086-3122/300-000	360
3	2086-3123/300-000	228
4	2086-3124/300-000	168
5	2086-3125/300-000	132
6	2086-3126/300-000	108
7	2086-3127/300-000	96
8	2086-3128/300-000	84

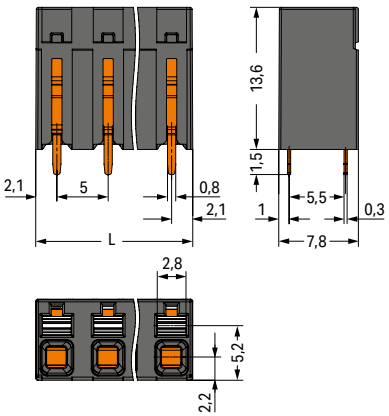

L = (pole no. – 1) x pin spacing + 4.2 mm

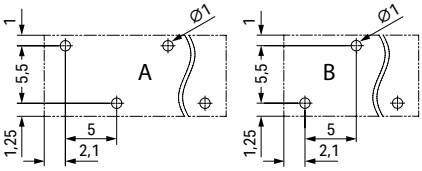

A = Even pole numbers
B = Odd pole numbers

PU = packaging unit; SPU = subpackaging unit; Dimensions in mm

THR PCB terminal block ▸ 2086 Series

Push-in CAGE CLAMP® ▸ Actuation type: Push-button ▸ 1.5 mm² ▸ Pin spacing: 5 mm / 0.197 inches ▸ Solder pin arrangement: over the entire terminal strip (staggered) ▸ Color: black

Solder pin length: 2.4 mm

Conductor connection direction to PCB 0 °

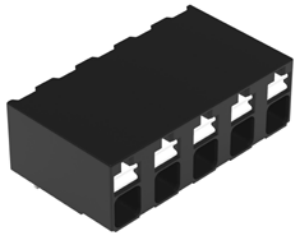

2086-3225

Pole number	Item No.	PU
2	**2086-3222**	360
3	**2086-3223**	228
4	**2086-3224**	168
5	**2086-3225**	132
6	**2086-3226**	108
7	**2086-3227**	96
8	**2086-3228**	84

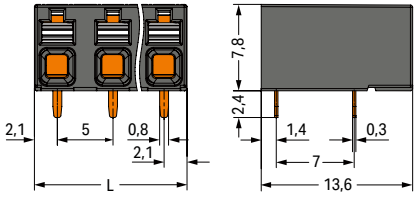

L = (pole no. – 1) x pin spacing + 4.2 mm

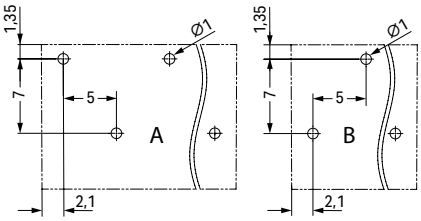

A = Even pole numbers
B = Odd pole numbers

Conductor connection direction to PCB 90 °



2086-3125

Pole number	Item No.	PU
2	**2086-3122**	360
3	**2086-3123**	228
4	**2086-3124**	168
5	**2086-3125**	132
6	**2086-3126**	108
7	**2086-3127**	96
8	**2086-3128**	84

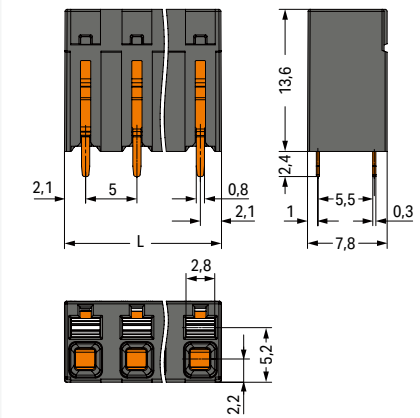

L = (pole no. – 1) x pin spacing + 4.2 mm

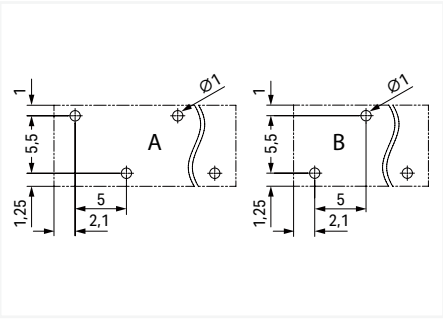

A = Even pole numbers
B = Odd pole numbers

PU = packaging unit; SPU = subpackaging unit; Dimensions in mm

THR PCB terminal block ▸ 2086 Series

Push-in CAGE CLAMP® ▸ Actuation type: Push-button ▸ 1.5 mm² ▸ Pin spacing: 5 mm / 0.197 inches ▸ Suitable for automated assembly ▸ Solder pin arrangement: over the entire terminal strip (in-line) ▸ Color: black



- Ideal for compact device connection, panel feedthrough and tight spaces
- Push-in CAGE CLAMP® termination of solid and ferruled fine-stranded conductors
- SMD and THR variants available
- Push-button moves in direction of conductor connection
- Conductor connection and mating direction parallel or perpendicular to the PCB
- Optionally available with in-line or staggered pins (3.5 and 5 mm pin spacing)

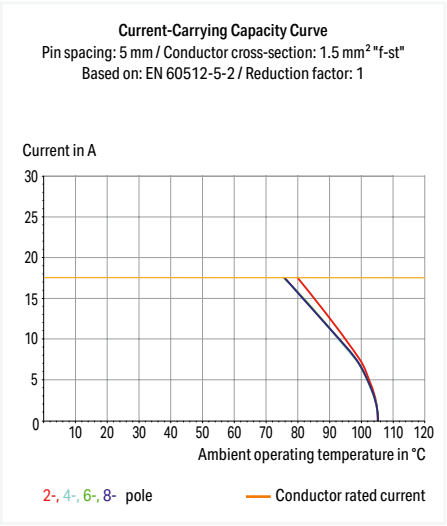

Electrical data			
Ratings per	**IEC/EN 60664-1**		
Overvoltage category	III	III	II
Pollution degree	3	2	2
Nominal voltage	320 V	320 V	630 V
Rated impulse withstand voltage	4 kV	4 kV	4 kV
Rated current	17.5 A	17.5 A	17.5 A
Approvals per	**UL 1059**		
Use group	B	C	D
Rated voltage	300 V	-	300 V
Rated current	14 A	-	10 A
Approvals per	**CSA**		
Use group	B	C	D
Rated voltage	300 V	-	300 V
Rated current	14 A	-	14 A

Connection Data	
Connection technology	Push-in CAGE CLAMP®
Strip length	8 … 9 mm / 0.31 … 0.35 inches
Solid conductor	0.14 … 1.5 mm² / 28 … 16 AWG
Fine-stranded conductor	0.14 … 1.5 mm² / 26 … 14 AWG
Fine-stranded conductor; with insulated ferrule	0.25 … 0.75 mm²
Fine-stranded conductor; with uninsulated ferrule	0.25 … 1.5 mm²

Material data	
Material group	I
Insulation material (main housing)	Polyphthalamide (PPA GF)
Flammability class per UL94	V0
Clamping spring material	Chrome-nickel spring steel (CrNi)
Contact material	Electrolytic copper (E_{Cu})
Contact Plating	Tin

Mechanical data	
Solder pin arrangement	over the entire terminal strip (in-line)
Number of solder pins per potential	2
Solder pin dimensions	0.3 x 0.8 mm
Plated through-hole diameter (THR)	1 $^{(+0.1)}$ mm
Reel diameter of tape-and-reel packaging	380 mm

Environmental requirements	
Limit temperature range	-60 … +105 °C
Processing temperature	-35 … +60 °C
Continuous operating temperature	-60 … +105 °C

Note:
Application notes:
Suitable for lead-free, reflow-soldering profiles per DIN EN 61760-1 and IEC 60068-2-58 up to max. 260°C peak temperature. Due to application-specific variables (component configuration and orientation, type of soldering machine, solder paste), trial runs are recommended to ensure product and process compatibility under actual manufacturing conditions.

Ferrule	Page 1081
Test and measurement	Page 1088
Tool	Page 1072
See technical section for further information	
Approvals and corresponding ratings, visit www.wago.com	

THR PCB terminal block ▸ 2086 Series

Push-in CAGE CLAMP® ▸ Actuation type: Push-button ▸ 1.5 mm² ▸ Pin spacing: 5 mm / 0.197 inches ▸ Suitable for automated assembly ▸ Solder pin arrangement: over the entire terminal strip (in-line) ▸ Color: black

Solder pin length: 1.5 mm

Conductor connection direction to PCB 0 °



2086-3205/300-000/997-607

Pole number	Tape width	Item No.	PU (SPU)
2	24 mm	**2086-3202/300-000/997-604**	3735 (415)
3	32 mm	**2086-3203/300-000/997-605**	2905 (415)
4	32 mm	**2086-3204/300-000/997-605**	2905 (415)
5	56 mm	**2086-3205/300-000/997-607**	1660 (415)
6	56 mm	**2086-3206/300-000/997-607**	1660 (415)
7	56 mm	**2086-3207/300-000/997-607**	1660 (415)
8	56 mm	**2086-3208/300-000/997-607**	1660 (415)

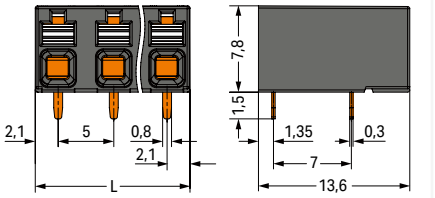

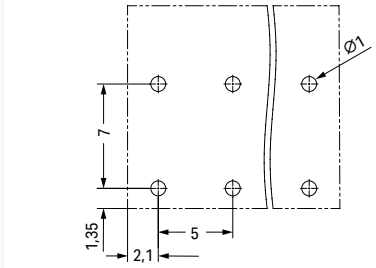

L = (pole no. – 1) x pin spacing + 4.2 mm

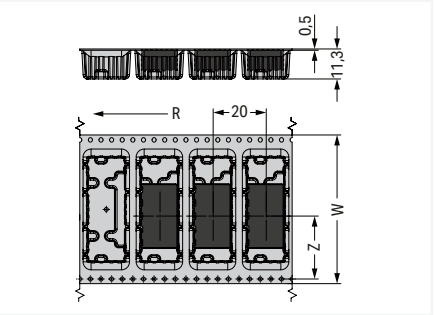

W = Tape width
R = Feed direction
Pole number 2: Z = 11.5 mm
Pole number 3: Z = 11.7 mm
Pole number 4: Z = 14.2 mm
Pole number 5 + 7: Z = 23.7 mm
Pole number 6 + 8: Z = 26.2 mm

PU = packaging unit; SPU = subpackaging unit; Dimensions in mm

THR PCB terminal block ▸ 2086 Series

Push-in CAGE CLAMP® ▸ Actuation type: Push-button ▸ 1.5 mm² ▸ Pin spacing: 5 mm / 0.197 inches ▸ Suitable for automated assembly ▸ Solder pin arrangement: over the entire terminal strip (in-line) ▸ Color: black

Solder pin length: 1.5 mm

Conductor connection direction to PCB 90 °



2086-3105/300-000/997-607

Pole number	Tape width	Item No.	PU (SPU)
2	24 mm	**2086-3102/300-000/997-604**	2115 (235)
3	32 mm	**2086-3103/300-000/997-605**	1645 (235)
4	32 mm	**2086-3104/300-000/997-605**	1645 (235)
5	56 mm	**2086-3105/300-000/997-607**	940 (235)
6	56 mm	**2086-3106/300-000/997-607**	940 (235)
7	56 mm	**2086-3107/300-000/997-607**	940 (235)
8	56 mm	**2086-3108/300-000/997-607**	940 (235)

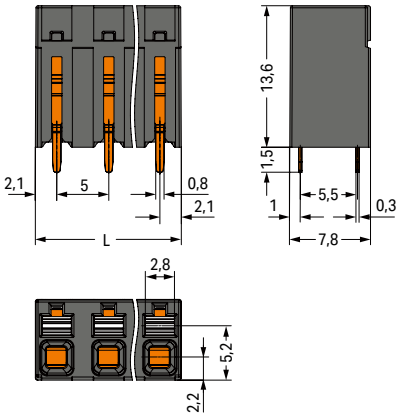

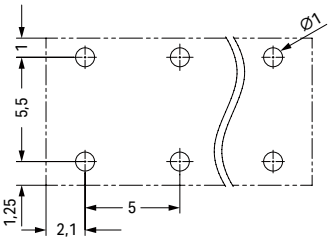

L = (pole no. – 1) x pin spacing + 4.2 mm

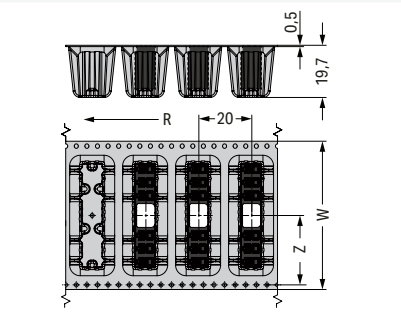

W= Tape width
R = Feed direction
Pole no. 2: Z = 11.5 mm
Pole no. 3 ... 4: Z = 14.2 mm
Pole no. 5 ... 8: Z = 26.2 mm

PU = packaging unit; SPU = subpackaging unit; Dimensions in mm

THR PCB terminal block ▸ 2086 Series

Push-in CAGE CLAMP® ▸ Actuation type: Push-button ▸ 1.5 mm² ▸ Pin spacing: 5 mm / 0.197 inches ▸ Suitable for automated assembly ▸ Solder pin arrangement: over the entire terminal strip (in-line) ▸ Color: black

Solder pin length: 2.4 mm

Conductor connection direction to PCB 0 °



2086-3205/997-607

Pole number	Tape width	Item No.	PU (SPU)
2	24 mm	**2086-3202/997-604**	3735 (415)
3	32 mm	**2086-3203/997-605**	2905 (415)
4	32 mm	**2086-3204/997-605**	2905 (415)
5	56 mm	**2086-3205/997-607**	1660 (415)
6	56 mm	**2086-3206/997-607**	1660 (415)
7	56 mm	**2086-3207/997-607**	1660 (415)
8	56 mm	**2086-3208/997-607**	1660 (415)

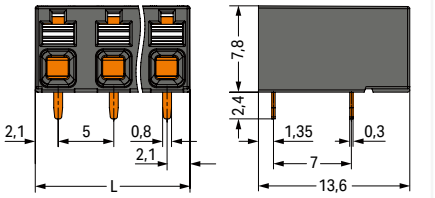

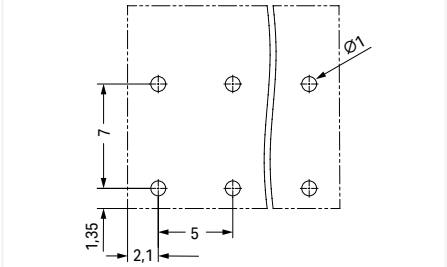

L = (pole no. – 1) x pin spacing + 4.2 mm

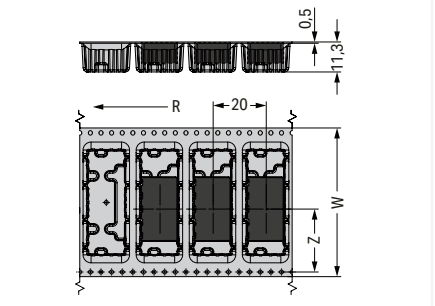

W = Tape width
R = Feed direction
Pole number 2: Z = 11.5 mm
Pole number 3: Z = 11.7 mm
Pole number 4: Z = 14.2 mm
Pole number 5 + 7: Z = 23.7 mm
Pole number 6 + 8: Z = 26.2 mm

PU = packaging unit; SPU = subpackaging unit; Dimensions in mm

THR PCB terminal block ▸ 2086 Series

Push-in CAGE CLAMP® ▸ Actuation type: Push-button ▸ 1.5 mm² ▸ Pin spacing: 5 mm / 0.197 inches ▸ Suitable for automated assembly ▸ Solder pin arrangement: over the entire terminal strip (in-line) ▸ Color: black

Solder pin length: 2.4 mm

Conductor connection direction to PCB 90 °



2086-3105/997-607

Pole number	Tape width	Item No.	PU (SPU)
2	24 mm	**2086-3102/997-604**	2115 (235)
3	32 mm	**2086-3103/997-605**	1645 (235)
4	32 mm	**2086-3104/997-605**	1645 (235)
5	56 mm	**2086-3105/997-607**	940 (235)
6	56 mm	**2086-3106/997-607**	940 (235)
7	56 mm	**2086-3107/997-607**	940 (235)
8	56 mm	**2086-3108/997-607**	940 (235)

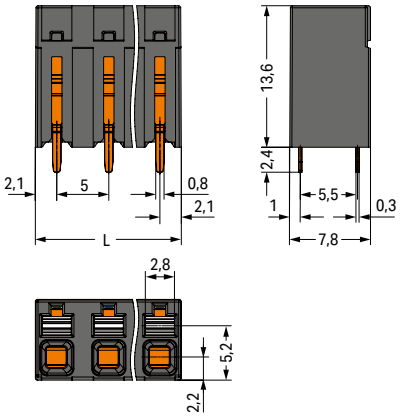

L = (pole no. – 1) x pin spacing + 4.2 mm

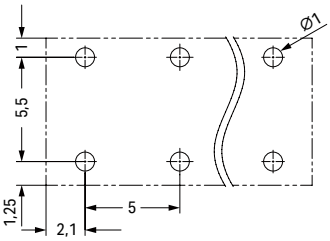

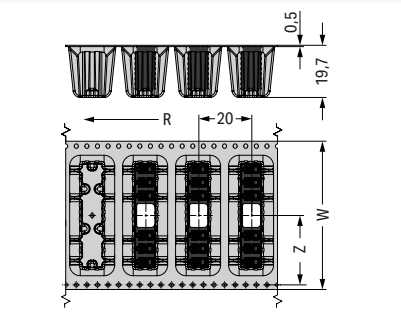

W= Tape width
R = Feed direction
Pole no. 2: Z = 11.5 mm
Pole no. 3 ... 4: Z = 14.2 mm
Pole no. 5 ... 8: Z = 26.2 mm

PU = packaging unit; SPU = subpackaging unit; Dimensions in mm

THR PCB terminal block ▸ 2086 Series

Push-in CAGE CLAMP® ▸ Actuation type: Push-button ▸ 1.5 mm² ▸ Pin spacing: 5 mm / 0.197 inches ▸ Suitable for automated assembly ▸ Solder pin arrangement: over the entire terminal strip (staggered) ▸ Color: black



- Ideal for compact device connection, panel feedthrough and tight spaces
- Push-in CAGE CLAMP® termination of solid and ferruled fine-stranded conductors
- SMD and THR variants available
- Push-button moves in direction of conductor connection
- Conductor connection and mating direction parallel or perpendicular to the PCB
- Optionally available with in-line or staggered pins (3.5 and 5 mm pin spacing)

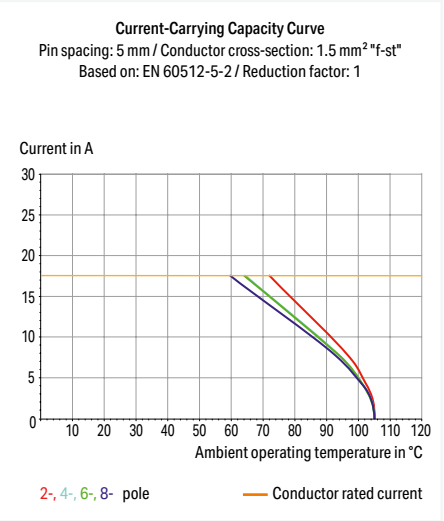

Electrical data			
Ratings per	**IEC/EN 60664-1**		
Overvoltage category	III	III	II
Pollution degree	3	2	2
Nominal voltage	500 V	630 V	1000 V
Rated impulse withstand voltage	6 kV	6 kV	6 kV
Rated current	17.5 A	17.5 A	17.5 A
Approvals per	**UL 1059**		
Use group	B	C	D
Rated voltage	300 V	-	300 V
Rated current	14 A	-	10 A
Approvals per	**CSA**		
Use group	B	C	D
Rated voltage	300 V	-	300 V
Rated current	14 A	-	14 A

Connection Data	
Connection technology	Push-in CAGE CLAMP®
Strip length	8 … 9 mm / 0.31 … 0.35 inches
Solid conductor	0.14 … 1.5 mm² / 28 … 16 AWG
Fine-stranded conductor	0.14 … 1.5 mm² / 26 … 14 AWG
Fine-stranded conductor; with insulated ferrule	0.25 … 0.75 mm²
Fine-stranded conductor; with uninsulated ferrule	0.25 … 1.5 mm²

Material data	
Insulation material (main housing)	Polyphthalamide (PPA GF)
Flammability class per UL94	V0
Clamping spring material	Chrome-nickel spring steel (CrNi)
Contact material	Electrolytic copper (E_{Cu})
Contact Plating	Tin

Mechanical data	
Solder pin arrangement	over the entire terminal strip (staggered)
Number of solder pins per potential	1
Solder pin dimensions	0.3 x 0.8 mm
Plated through-hole diameter (THR)	1 $^{(+0.1)}$ mm
Reel diameter of tape-and-reel packaging	380 mm

Environmental requirements	
Limit temperature range	-60 … +105 °C

Note:
Application notes:
Suitable for lead-free, reflow-soldering profiles per DIN EN 61760-1 and IEC 60068-2-58 up to max. 260°C peak temperature. Due to application-specific variables (component configuration and orientation, type of soldering machine, solder paste), trial runs are recommended to ensure product and process compatibility under actual manufacturing conditions. The mechanical stability of a two-pole terminal strip (2086 Series) with alternating pin spacing is lower than that of a multi-pole terminal strip with alternating pin spacing or a terminal strip with double pin spacing when subjected to external forces, owing to its design. It must be ensured that, in the application, additional support, temporary restraint of the connected conductors, and corresponding operating instructions protect the terminal strip from excessive mechanical stress, such as torsional or bending forces, both during conductor connection and in use.

Ferrule	Page 1081
Test and measurement	Page 1088
Tool	Page 1072
See technical section for further information	
Approvals and corresponding ratings, visit www.wago.com	

THR PCB terminal block ▸ 2086 Series

Push-in CAGE CLAMP® ▸ Actuation type: Push-button ▸ 1.5 mm² ▸ Pin spacing: 5 mm / 0.197 inches ▸ Suitable for automated assembly ▸ Solder pin arrangement: over the entire terminal strip (staggered) ▸ Color: black

Solder pin length: 1.5 mm

Conductor connection direction to PCB 0 °



2086-3225/300-000/997-607

Pole number	Tape width	Item No.	PU (SPU)
2	24 mm	**2086-3222/300-000/997-604**	3735 (415)
5	56 mm	**2086-3225/300-000/997-607**	1660 (415)
6	56 mm	**2086-3226/300-000/997-607**	1660 (415)
7	56 mm	**2086-3227/300-000/997-607**	1660 (415)
8	56 mm	**2086-3228/300-000/997-607**	1660 (415)

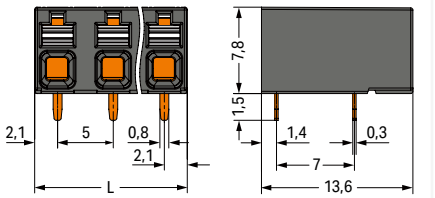

L = (pole no. – 1) x pin spacing + 4.2 mm

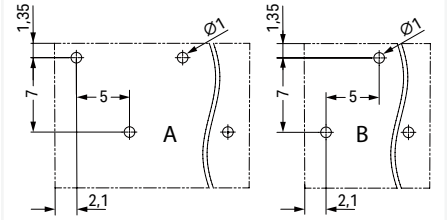

A = Even pole numbers
B = Odd pole numbers

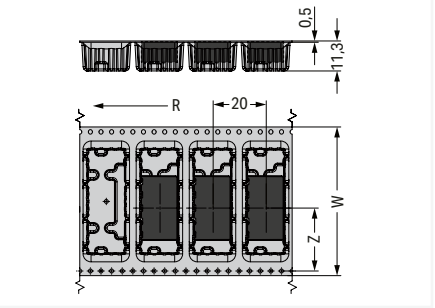

W = Tape width
R = Feed direction
Pole number 2: Z = 11.5 mm
Pole number 3: Z = 11.7 mm
Pole number 4: Z = 14.2 mm
Pole number 5 + 7: Z = 23.7 mm
Pole number 6 + 8: Z = 26.2 mm

PU = packaging unit; SPU = subpackaging unit; Dimensions in mm

THR PCB terminal block ▸ 2086 Series

Push-in CAGE CLAMP® ▸ Actuation type: Push-button ▸ 1.5 mm² ▸ Pin spacing: 5 mm / 0.197 inches ▸ Suitable for automated assembly ▸ Solder pin arrangement: over the entire terminal strip (staggered) ▸ Color: black

Solder pin length: 1.5 mm

Conductor connection direction to PCB 90 °

2



2086-3125/300-000/997-607

Pole number	Tape width	Item No.	PU (SPU)
2	24 mm	**2086-3122/300-000/997-604**	2115 (235)
3	32 mm	**2086-3123/300-000/997-605**	1645 (235)
4	32 mm	**2086-3124/300-000/997-605**	1645 (235)
5	56 mm	**2086-3125/300-000/997-607**	940 (235)
6	56 mm	**2086-3126/300-000/997-607**	940 (235)
7	56 mm	**2086-3127/300-000/997-607**	940 (235)
8	56 mm	**2086-3128/300-000/997-607**	940 (235)

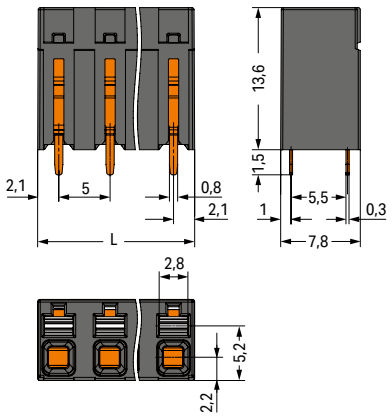

L = (pole no. – 1) x pin spacing + 4.2 mm

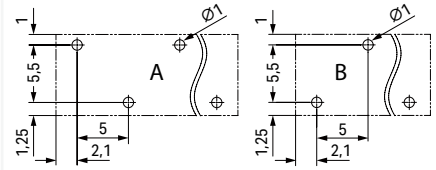

A = Even pole numbers
B = Odd pole numbers

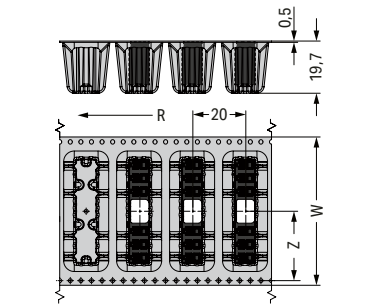

W= Tape width
R = Feed direction
Pole no. 2: Z = 11.5 mm
Pole no. 3 ... 4: Z = 14.2 mm
Pole no. 5 ... 8: Z = 26.2 mm

PU = packaging unit; SPU = subpackaging unit; Dimensions in mm

THR PCB terminal block ▸ 2086 Series

Push-in CAGE CLAMP® ▸ Actuation type: Push-button ▸ 1.5 mm² ▸ Pin spacing: 5 mm / 0.197 inches ▸ Suitable for automated assembly ▸ Solder pin arrangement: over the entire terminal strip (staggered) ▸ Color: black

Solder pin length: 2.4 mm

Conductor connection direction to PCB 0 °



2086-3225/997-607

Pole number	Tape width	Item No.	PU (SPU)
2	24 mm	**2086-3222/997-604**	3735 (415)
5	56 mm	**2086-3225/997-607**	1660 (415)
6	56 mm	**2086-3226/997-607**	1660 (415)
7	56 mm	**2086-3227/997-607**	1660 (415)
8	56 mm	**2086-3228/997-607**	1660 (415)

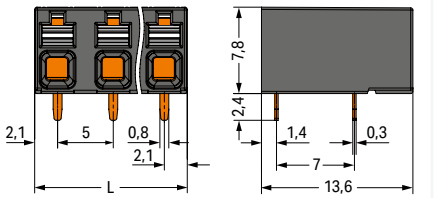

L = (pole no. – 1) x pin spacing + 4.2 mm

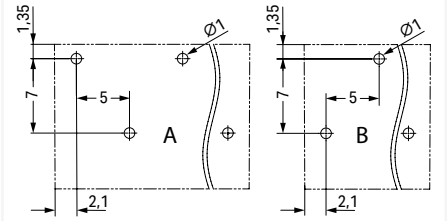

A = Even pole numbers
B = Odd pole numbers

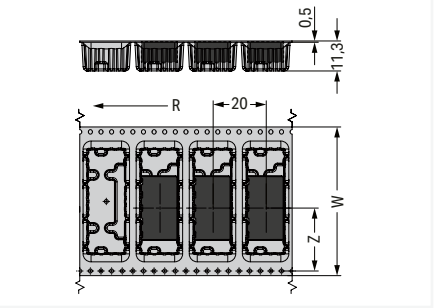

W = Tape width
R = Feed direction
Pole number 2: Z = 11.5 mm
Pole number 3: Z = 11.7 mm
Pole number 4: Z = 14.2 mm
Pole number 5 + 7: Z = 23.7 mm
Pole number 6 + 8: Z = 26.2 mm

PU = packaging unit; SPU = subpackaging unit; Dimensions in mm

THR PCB terminal block ▸ 2086 Series

Push-in CAGE CLAMP® ▸ Actuation type: Push-button ▸ 1.5 mm² ▸ Pin spacing: 5 mm / 0.197 inches ▸ Suitable for automated assembly ▸ Solder pin arrangement: over the entire terminal strip (staggered) ▸ Color: black

Solder pin length: 2.4 mm

Conductor connection direction to PCB 90 °

2



2086-3125/997-607

Pole number	Tape width	Item No.	PU (SPU)
2	24 mm	**2086-3122/997-604**	2115 (235)
3	32 mm	**2086-3123/997-605**	1645 (235)
4	32 mm	**2086-3124/997-605**	1645 (235)
5	56 mm	**2086-3125/997-607**	940 (235)
6	56 mm	**2086-3126/997-607**	940 (235)
7	56 mm	**2086-3127/997-607**	940 (235)
8	56 mm	**2086-3128/997-607**	940 (235)

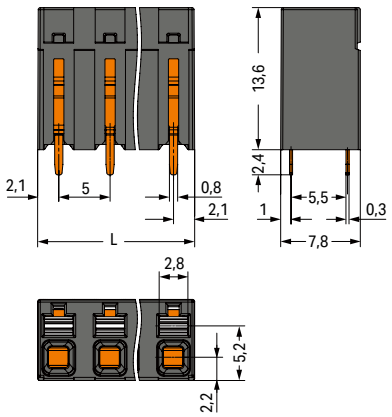

L = (pole no. – 1) x pin spacing + 4.2 mm

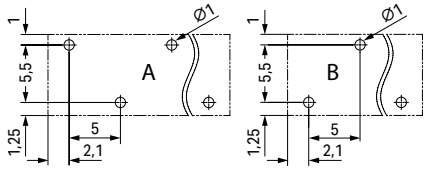

A = Even pole numbers
B = Odd pole numbers

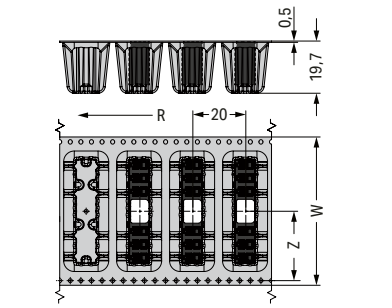

W= Tape width
R = Feed direction
Pole no. 2: Z = 11.5 mm
Pole no. 3 ... 4: Z = 14.2 mm
Pole no. 5 ... 8: Z = 26.2 mm

PU = packaging unit; SPU = subpackaging unit; Dimensions in mm

218 Series
Description and Installation

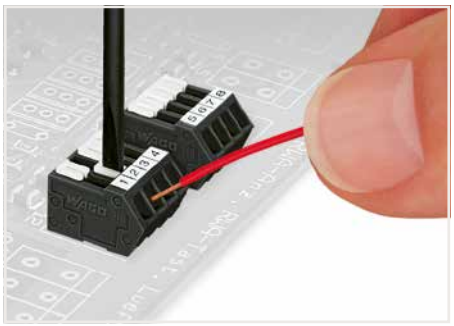

Terminating stranded conductors in confined spaces requires a great deal of patience, unless you use the new 218 Series PCB Terminal Strips. The clamping units of these strips can be held open during termination process via integrated locking slide.

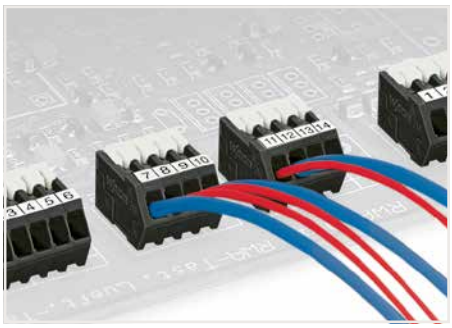

Terminating 0.75 mm² (18 AWG) conductors is possible; however, insulation diameter allows only every other clamping unit to be terminated with this conductor size.

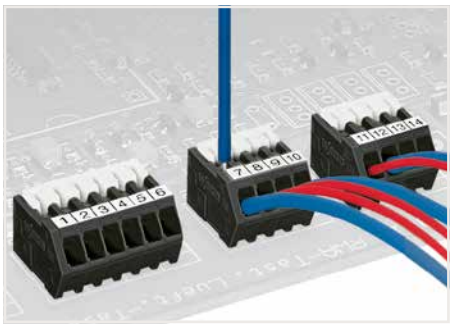

Testing directly on the clamping spring.

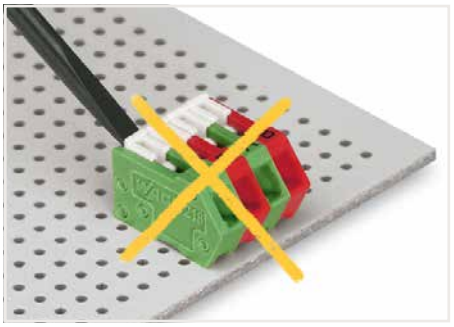

Incorrect – do not operate the locking slides from the back.

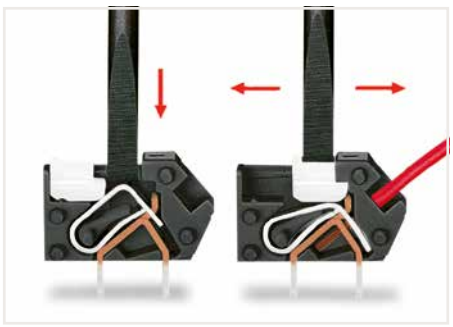

Conductor termination: To momentarily open the clamping unit, use screwdriver and then insert a stripped conductor. To open clamping unit for an extended period, move locking slide toward conductor entry hole. Then fully insert stripped conductor and move locking slide back to original position (also possible to perform with fingernail).

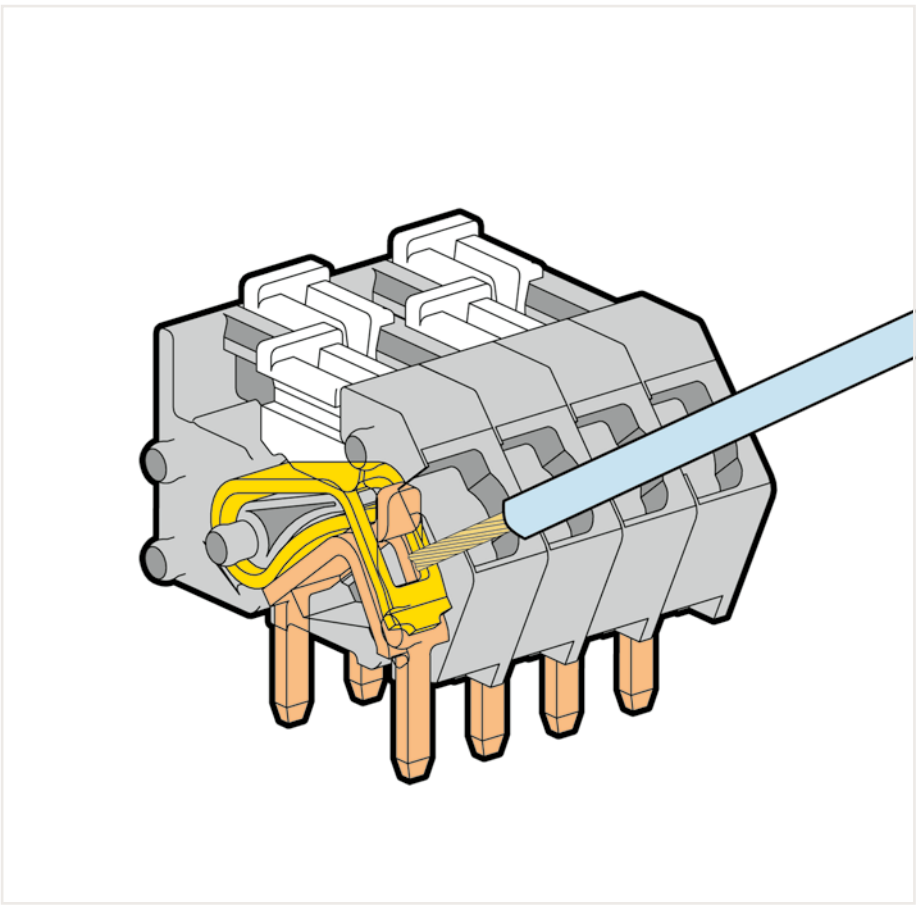

218 Series

236 and 250 Series
Description and Installation



Inserting a conductor via 3.5 mm screwdriver.
Screwdriver actuation parallel to conductor entry.



Inserting a conductor via 3.5 mm screwdriver.
Screwdriver actuation perpendicular to conductor entry.

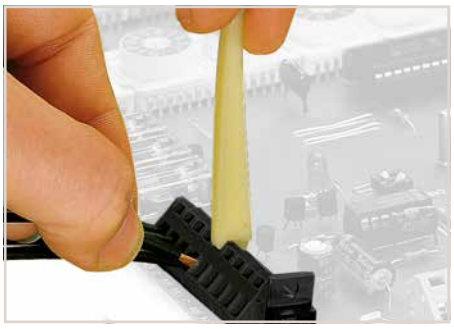

Inserting a conductor via operating tool.



Inserting solid conductors via push-in termination.
Inserting fine-stranded conductors via push-buttons,
250 Series – 3.5 mm pin spacing.



Testing with 11 mm Ø test pin, on the conductor,
250 Series – 2.5 … 3.5 mm pin spacing.

THR PCB terminal block ▸ 250 Series

Push-in CAGE CLAMP® ▸ Actuation type: Push-button ▸ Terminal strip ▸ 0.5 mm² ▸ Pin spacing: 2.5 mm / 0.098 inches ▸ Color: black



- Cost-effective integration of high-temperature resistant THR terminal strips into SMT reflow soldering processes
- Push-in termination of solid and ferruled conductors
- Termination/removal of fine-stranded conductors via push-buttons
- 45° conductor entry angle provides easy, space-saving wiring

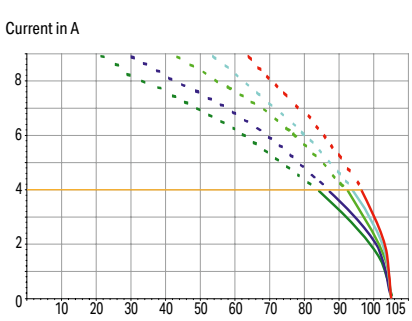

Electrical data			
Pin spacing	**2.5 mm / 0.098 inches**		
Ratings per	**IEC/EN 60664-1**		
Overvoltage category	III	III	II
Pollution degree	3	2	2
Nominal voltage	160 V	160 V	250 V
Rated impulse withstand voltage	2.5 kV	2.5 kV	2.5 kV
Rated current	4 A	4 A	4 A
Approvals per	**UL 1059**		
Use group	B	C	D
Rated voltage	300 V	-	300 V
Rated current	5 A	-	5 A
Approvals per	**CSA**		
Use group	B	C	D
Rated voltage	300 V	-	300 V
Rated current	5 A	-	5 A

Connection Data	
Connection technology	Push-in CAGE CLAMP®
Strip length	8.5 … 9.5 mm / 0.33 … 0.37 inches
Conductor connection direction to PCB	45 °
Solid conductor	0.14 … 0.5 mm² / 24 … 20 AWG
Fine-stranded conductor	0.2 … 0.5 mm² / 24 … 20 AWG
Conductor diameter	0.4 … 0.8 mm / 24 … 20 AWG

Material data	
Material group	IIIa
Insulation material (main housing)	Polyamide (PA46)
Flammability class per UL94	V2
Clamping spring material	Copper alloy
Contact Plating	Tin

Mechanical data	
Solder pin arrangement	over the entire terminal strip (staggered)
Number of solder pins per potential	1
Solder pin length	2.4 mm
Solder pin dimensions	0.4 x 0.75 mm

Environmental requirements	
Limit temperature range	-60 … +105 °C

Note:
Application notes:
Suitable for lead-free, reflow-soldering profiles per DIN EN 61760-1 and IEC 60068-2-58 up to max. 260°C peak temperature. Due to application-specific variables (component configuration and orientation, type of soldering machine, solder paste), trial runs are recommended to ensure product and process compatibility under actual manufacturing conditions.

THR soldering	Page 278
Marking	Page 1066
Test and measurement	Page 1088
Tool	Page 1072
See technical section for further information	
Approvals and corresponding ratings, visit www.wago.com	

THR PCB terminal block ▸ 250 Series

Push-in CAGE CLAMP® ▸ Actuation type: Push-button ▸ Terminal strip ▸ 0.5 mm² ▸ Pin spacing: 2.5 mm / 0.098 inches ▸ Color: black



250-406/350-604

Pole number	Item No.	PU (SPU)
2	**250-402/353-604**	720 (180)
3	**250-403/353-604**	520 (130)
4	**250-404/353-604**	400 (100)
5	**250-405/353-604**	340 (85)
6	**250-406/353-604**	280 (70)
7	**250-407/353-604**	240 (60)
8	**250-408/353-604**	220 (55)
10	**250-410/353-604**	180 (45)

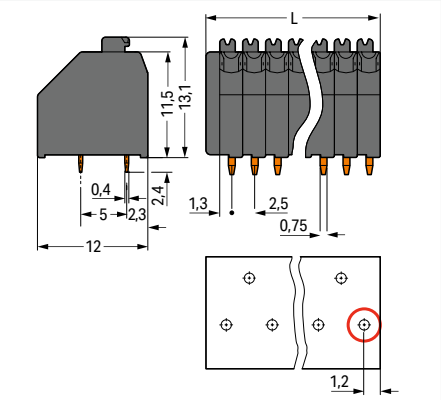

L = (pole no. x pin spacing) + 1.5 mm
First solder pin, front right (red circle)

PU = packaging unit; SPU = subpackaging unit; Dimensions in mm

Variants:
- Other pole numbers
- Direct marking
- Other versions (or variants) can be requested from WAGO Sales or configured at https://configurator.wago.com/.

THR PCB terminal block ▸ 250 Series

Push-in CAGE CLAMP® ▸ Actuation type: Push-button ▸ Terminal strip ▸ 1.5 mm² ▸ Pin spacing: 3.5 mm / 0.138 inches ▸ Color: black



- Cost-effective integration of high-temperature resistant THR terminal strips into SMT reflow soldering processes
- Versions with suction pads are available in tape-and-reel packaging for automated assembly
- Push-in termination of solid and ferruled conductors
- Termination/removal of fine-stranded conductors via push-buttons
- 45° conductor entry angle provides easy, space-saving wiring

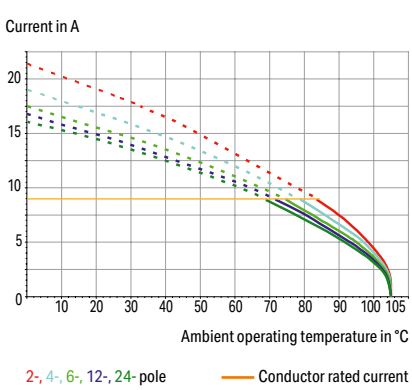

Electrical data			
Pin spacing	**3.5 mm / 0.138 inches**		
Ratings per	**IEC/EN 60664-1**		
Overvoltage category	III	III	II
Pollution degree	3	2	2
Nominal voltage	200 V	320 V	320 V
Rated impulse withstand voltage	4 kV	4 kV	4 kV
Rated current	8 A	8 A	8 A
Approvals per	**UL 1059**		
Use group	B	C	D
Rated voltage	300 V	-	300 V
Rated current	8 A	-	5 A
Approvals per	**CSA**		
Use group	B	C	D
Rated voltage	300 V	-	300 V
Rated current	10 A	-	10 A

Connection Data	
Connection technology	Push-in CAGE CLAMP®
Strip length	8.5 … 9.5 mm / 0.33 … 0.37 inches
Conductor connection direction to PCB	45 °
Solid conductor	0.2 … 1.5 mm² / 24 … 16 AWG
Fine-stranded conductor	0.2 … 1.5 mm² / 24 … 16 AWG
Fine-stranded conductor; with insulated ferrule	0.25 … 1 mm²
Fine-stranded conductor; with uninsulated ferrule	0.25 … 1 mm²

Material data	
Material group	IIIa
Insulation material (main housing)	Polyamide (PA46)
Flammability class per UL94	V2
Clamping spring material	Copper alloy
Contact Plating	Tin

Mechanical data	
Solder pin arrangement	over the entire terminal strip (staggered)
Number of solder pins per potential	1
Solder pin length	2.4 mm
Solder pin dimensions	0.4 x 0.75 mm

Environmental requirements	
Limit temperature range	-60 … +105 °C

Note:
Application notes:
Suitable for lead-free, reflow-soldering profiles per DIN EN 61760-1 and IEC 60068-2-58 up to max. 260°C peak temperature. Due to application-specific variables (component configuration and orientation, type of soldering machine, solder paste), trial runs are recommended to ensure product and process compatibility under actual manufacturing conditions.

THR soldering	Page 278
Marking	Page 1066
Test and measurement	Page 1088
Tool	Page 1072
See technical section for further information	
Approvals and corresponding ratings, visit www.wago.com	

THR PCB terminal block ▸ 250 Series

Push-in CAGE CLAMP® ▸ Actuation type: Push-button ▸ Terminal strip ▸ 1.5 mm² ▸ Pin spacing: 3.5 mm / 0.138 inches ▸ Color: black



250-206/350-604

Pole number	Item No.	PU (SPU)
2	250-202/353-604	560 (140)
3	250-203/353-604	400 (100)
4	250-204/353-604	300 (75)
5	250-205/353-604	240 (60)
6	250-206/353-604	200 (50)
7	250-207/353-604	180 (45)
8	250-208/353-604	160 (40)

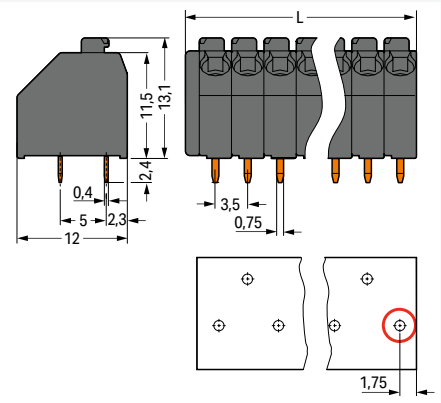

L = (pole no. x pin spacing) + 1.5 mm
First solder pin, front right (red circle)

Suitable for automated assembly



250-208/353-604/997-406

Pole number	Tape width	Item No.	PU
2	24 mm	250-202/353-604/997-404	160
3	24 mm	250-203/353-604/997-404	160
4	32 mm	250-204/353-604/997-405	160
5	32 mm	250-205/353-604/997-405	160
6	44 mm	250-206/353-604/997-406	160
7	44 mm	250-207/353-604/997-406	160
8	44 mm	250-208/353-604/997-406	160

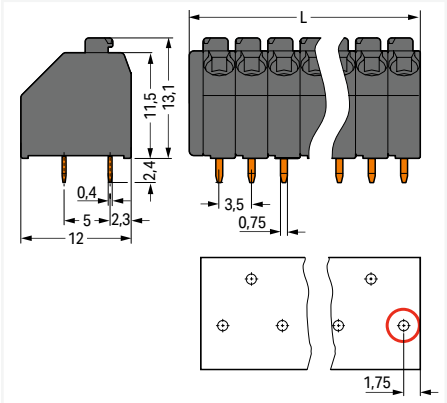

L = (pole no. x pin spacing) + 1.5 mm
First solder pin, front right (red circle)

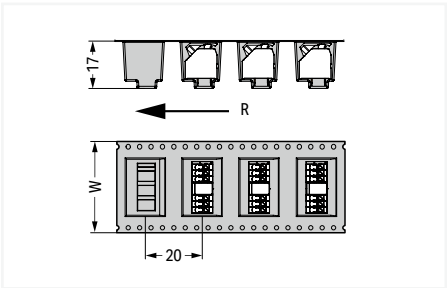

W = tape width
R = feed direction

PU = packaging unit; SPU = subpackaging unit; Dimensions in mm

Variants:
- Other pole numbers
- Direct marking
- Other versions (or variants) can be requested from WAGO Sales or configured at https://configurator.wago.com/.

THR PCB terminal block ▸ 805 Series

Push-in CAGE CLAMP® ▸ Actuation type: Push-button ▸ Terminal strip ▸ Pin spacing: 3.5 mm / 0.138 inches ▸ 1.5 mm² ▸ Color: black

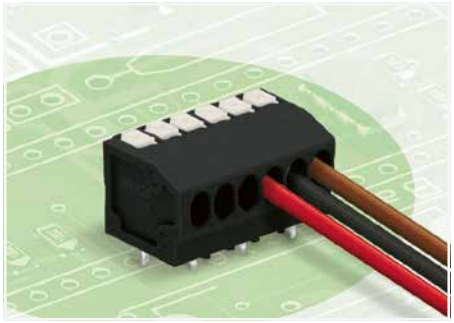

- THR PCB terminal strips with Push-in CAGE CLAMP® connection and push-button actuation
- Push-in termination of solid and ferruled conductors
- Flush-mount push-buttons that close with minimal force for convenient termination/removal of fine-stranded conductors
- Convenient, tool-free operation

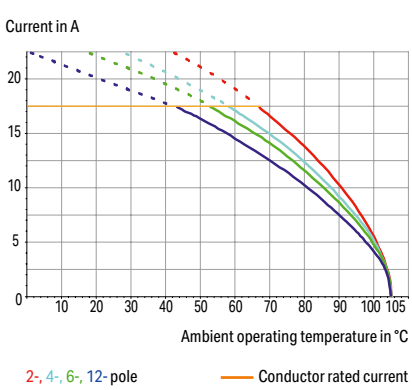

Electrical data			
Pin spacing	**3.5 mm / 0.138 inches**		
Ratings per	**IEC/EN 60664-1**		
Overvoltage category	III	III	II
Pollution degree	3	2	2
Nominal voltage	200 V	320 V	320 V
Rated impulse withstand voltage	4 kV	4 kV	4 kV
Rated current	17.5 A	17.5 A	17.5 A
Approvals per	**UL 1059**		
Use group	B	C	D
Rated voltage	300 V	150 V	300 V
Rated current	10 A	10 A	10 A

Connection Data	
Connection technology	Push-in CAGE CLAMP®
Strip length	9 … 10 mm / 0.35 … 0.39 inches
Conductor connection direction to PCB	0 °
Solid conductor	0.2 … 1.5 mm² / 24 … 16 AWG
Fine-stranded conductor	0.2 … 1.5 mm² / 24 … 16 AWG
Fine-stranded conductor; with insulated ferrule	0.25 … 1 mm²
Fine-stranded conductor; with uninsulated ferrule	0.25 … 1 mm²
Material data	
Material group	IIIa
Insulation material (main housing)	Polyamide (PA46)
Flammability class per UL94	V2
Clamping spring material	Chrome-nickel spring steel (CrNi)
Contact material	Electrolytic copper (E_{Cu})
Contact Plating	Tin
Mechanical data	
Solder pin arrangement	over the entire terminal strip (staggered)
Number of solder pins per potential	1
Solder pin length	2.2 mm
Solder pin dimensions	0.5 x 0.75 mm
Environmental requirements	
Limit temperature range	-60 … +105 °C

Note:
Application notes:
Suitable for lead-free, reflow-soldering profiles per DIN EN 61760-1 and IEC 60068-2-58 up to max. 260°C peak temperature. Due to application-specific variables (component configuration and orientation, type of soldering machine, solder paste), trial runs are recommended to ensure product and process compatibility under actual manufacturing conditions.

THR soldering	Page 278
Marking	Page 1066
Tool	Page 1072
See technical section for further information	
Approvals and corresponding ratings, visit www.wago.com	

THR PCB terminal block ▸ 805 Series

Push-in CAGE CLAMP® ▸ Actuation type: Push-button ▸ Terminal strip ▸ Pin spacing: 3.5 mm / 0.138 inches ▸ 1.5 mm² ▸ Color: black

Suitable for automated assembly





805-306/200-604

Pole number	Item No.	PU (SPU)
2	805-302/200-604	580 (145)
3	805-303/200-604	420 (105)
4	805-304/200-604	320 (80)
5	805-305/200-604	260 (65)
6	805-306/200-604	220 (55)
7	805-307/200-604	180 (45)
8	805-308/200-604	160 (40)

805-308/200-604/997-406

Pole number	Item No.	PU
6	805-306/200-604/997-406	160
7	805-307/200-604/997-406	160
8	805-308/200-604/997-406	160

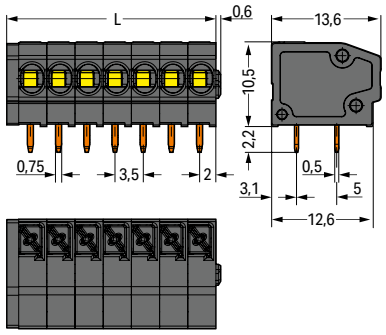

L = (pole no. x pin spacing) + 1.5 mm

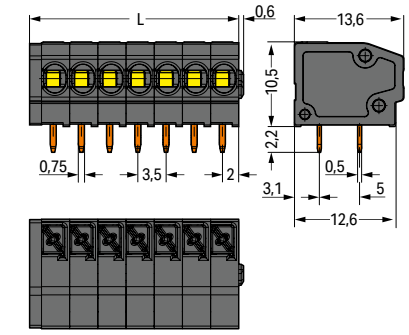

L = (pole no. x pin spacing) + 1.5 mm

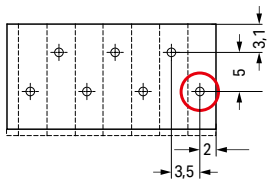

First solder pin, front right (red circle)

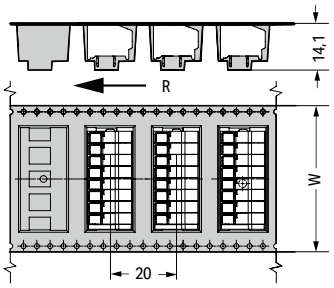

R = feed direction
W = tape width

PU = packaging unit; SPU = subpackaging unit; Dimensions in mm

Variants:
- Other pole numbers
- Other colors
- Mixed-color PCB connector strips
- Direct marking
- Other versions (or variants) can be requested from WAGO Sales or configured at https://configurator.wago.com/.

THR PCB terminal block ▸ 236 Series

CAGE CLAMP® ▸ Actuation type: Operating tool ▸ 2.5 mm² ▸ Terminal strip ▸ Pin spacing: 5 mm / 0.197 inches ▸ Color: black

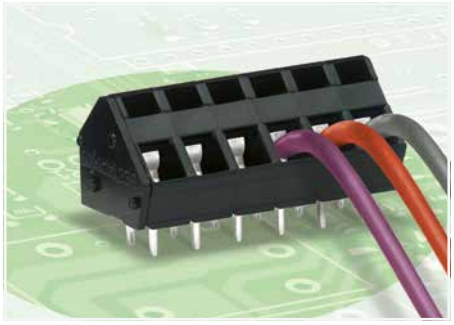

- PCB terminal strips made of high-temperature resistant plastic are suitable for SMT reflow soldering
- Double solder pins for high mechanical stability

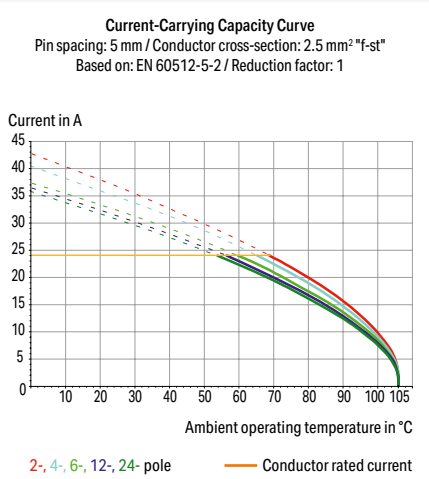

Electrical data			
Pin spacing	**5 mm / 0.197 inches**		
Ratings per	**IEC/EN 60664-1**		
Overvoltage category	III	III	II
Pollution degree	3	2	2
Nominal voltage	200 V	320 V	320 V
Rated impulse withstand voltage	4 kV	4 kV	4 kV
Rated current	24 A	24 A	24 A
Approvals per	**UL 1059**		
Use group	B	C	D
Rated voltage	300 V	-	300 V
Rated current	15 A	-	10 A
Approvals per	**CSA**		
Use group	B	C	D
Rated voltage	300 V	-	300 V
Rated current	15 A	-	10 A

Connection Data	
Connection technology	CAGE CLAMP®
Strip length	5 … 6 mm / 0.2 … 0.24 inches
Conductor connection direction to PCB	45 °
Solid conductor	0.08 … 2.5 mm² / 28 … 12 AWG
Fine-stranded conductor	0.08 … 2.5 mm² / 28 … 12 AWG
Fine-stranded conductor; with insulated ferrule	0.25 … 1.5 mm²
Fine-stranded conductor; with uninsulated ferrule	0.25 … 1.5 mm²
Note (conductor cross-section)	12 AWG: THHN, THWN

Material data	
Material group	IIIa
Insulation material (main housing)	Polyamide (PA46)
Flammability class per UL94	V2
Clamping spring material	Chrome-nickel spring steel (CrNi)
Contact material	Electrolytic copper (E_{Cu})
Contact Plating	Tin

Mechanical data	
Solder pin arrangement	over the entire terminal strip (in-line)
Number of solder pins per potential	2
Solder pin length	3.6 mm
Solder pin dimensions	0.7 x 0.7 mm
Plated through-hole diameter (THR)	1.1 $^{(+0.1)}$ mm

Environmental requirements	
Limit temperature range	-60 … +115 °C

Note:
Application notes:
Suitable for lead-free, reflow-soldering profiles per DIN EN 61760-1 and IEC 60068-2-58 up to max. 260°C peak temperature. Due to application-specific variables (component configuration and orientation, type of soldering machine, solder paste), trial runs are recommended to ensure product and process compatibility under actual manufacturing conditions.

THR soldering	Page 278
Ferrule	Page 1081
Marking	Page 1067
Stickers with operating instructions	Page 1069
Test and measurement	Page 351
Tool	Page 1072
See technical section for further information	
Approvals and corresponding ratings, visit www.wago.com	

THR PCB terminal block ▸ 236 Series

CAGE CLAMP® ▸ Actuation type: Operating tool ▸ 2.5 mm² ▸ Terminal strip ▸ Pin spacing: 5 mm / 0.197 inches ▸ Color: black



236-406/334-604

Pole number	Item No.	PU (SPU)
2	236-402/334-604	420 (105)
3	236-403/334-604	280 (70)
4	236-404/334-604	220 (55)
5	236-405/334-604	180 (45)
6	236-406/334-604	140 (35)

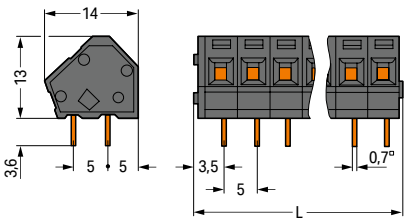

L = (pole no. x pin spacing) + 2.3 mm

Suitable for automated assembly



236-402/334-604/997-405

Pole number	Tape width	Item No.	PU
2	32 mm	236-402/334-604/997-405	140
3	32 mm	236-403/334-604/997-405	140
4	44 mm	236-404/334-604/997-406	140
5	44 mm	236-405/334-604/997-406	140
6	44 mm	236-406/334-604/997-406	140

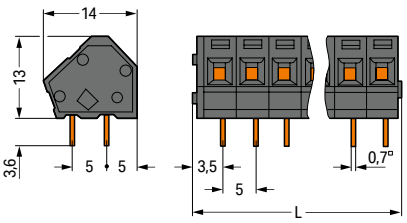

L = (pole no. x pin spacing) + 2.3 mm

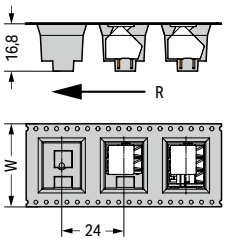

W = tape width
R = feed direction

PU = packaging unit; SPU = subpackaging unit; Dimensions in mm

Variants:
- Other pole numbers
- Direct marking
- Other versions (or variants) can be requested from WAGO Sales or configured at https://configurator.wago.com/.

THR PCB terminal block ▸ 218 Series

CAGE CLAMP® ▸ Actuation type: Slider ▸ Actuation type: Slider ▸ 0.5 mm² ▸ Color: black

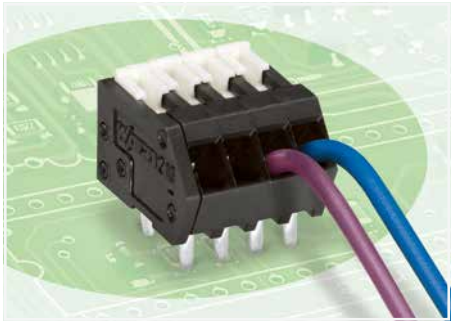

- Terminal strips are just 8.1 mm tall and feature an innovative, locking slide-actuated CAGE CLAMP® .
- Several clamping units can be held open simultaneously.
- Easily terminate stranded conductors in tight spaces (e.g., bus connectors).
- THR soldering provides integration into SMT assembly and soldering processes.

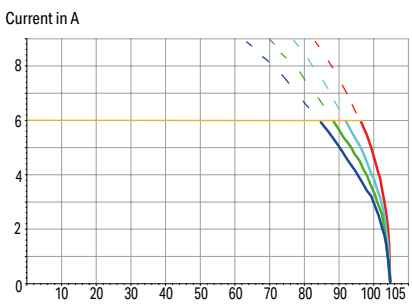

Electrical data			
Pin spacing	**2.5 mm / 0.098 inches; 2.54 mm / 0.1 inches**		
Ratings per	**IEC/EN 60664-1**		
Overvoltage category	III	III	II
Pollution degree	3	2	2
Nominal voltage	32 V	160 V	320 V
Rated impulse withstand voltage	2.5 kV	2.5 kV	2.5 kV
Rated current	6 A	6 A	6 A

Connection Data	
Connection technology	CAGE CLAMP®
Strip length	5 … 6 mm / 0.2 … 0.24 inches
Conductor connection direction to PCB	40 °
Solid conductor	0.08 … 0.5 mm² / 28 … 20 AWG
Fine-stranded conductor	0.08 … 0.5 mm² / 28 … 20 AWG
Fine-stranded conductor; with insulated ferrule	0.25 mm²
Fine-stranded conductor; with uninsulated ferrule	0.25 mm²
Note (conductor cross-section)	Terminating 0.75 mm²/18 AWG conductors is possible; however insulation diameter allows only every other clamping unit to be terminated with this conductor size.

Material data	
Material group	IIIa
Insulation material (main housing)	Polyamide (PA46)
Flammability class per UL94	V2
Clamping spring material	Chrome-nickel spring steel (CrNi)
Contact material	Electrolytic copper (E_{Cu})
Contact Plating	Tin

Mechanical data	
Solder pin arrangement	over the entire terminal strip (in-line)
Number of solder pins per potential	2
Solder pin length	2.8 mm
Solder pin dimensions	0.5 x 0.75 mm
Plated through-hole diameter (THR)	1.1 $^{(+0.1)}$ mm

Environmental requirements	
Limit temperature range	-60 … +105 °C

Note:
Application notes:
Suitable for lead-free, reflow-soldering profiles per DIN EN 61760-1 and IEC 60068-2-58 up to max. 260°C peak temperature. Due to application-specific variables (component configuration and orientation, type of soldering machine, solder paste), trial runs are recommended to ensure product and process compatibility under actual manufacturing conditions.

THR soldering	Page 278
Ferrule	Page 1081
Marking	Page 1066
Test and measurement	Page 1088
Tool	Page 1072
See technical section for further information	
Approvals and corresponding ratings, visit www.wago.com	

THR PCB terminal block ▸ 218 Series

CAGE CLAMP® ▸ Actuation type: Slider ▸ Actuation type: Slider ▸ 0.5 mm² ▸ Color: black

Pin spacing: 2.5 mm / 0.098 inches

Suitable for automated assembly



218-104/000-604

Pole number	Item No.	PU (SPU)
2	218-102/000-604	760 (190)
3	218-103/000-604	540 (135)
4	218-104/000-604	420 (105)
5	218-105/000-604	340 (85)
6	218-106/000-604	280 (70)
7	218-107/000-604	240 (60)



218-102/000-604/997-403

Pole number	Tape width	Item No.	PU
2	16 mm	218-102/000-604/997-403	250
3	32 mm	218-103/000-604/997-405	250
4	32 mm	218-104/000-604/997-405	250
5	32 mm	218-105/000-604/997-405	250
6	32 mm	218-106/000-604/997-405	250
7	32 mm	218-107/000-604/997-405	250

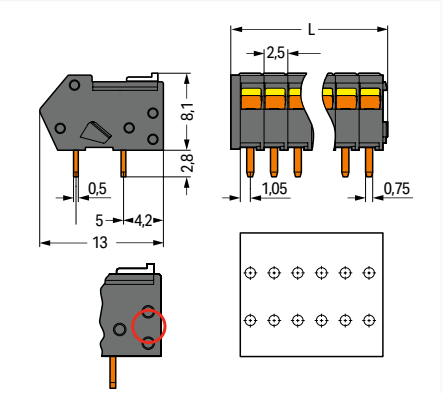

L = (pole no. x pin spacing) + 1.5 mm

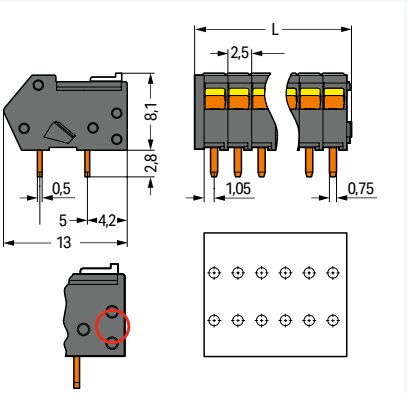

L = (pole no. x pin spacing) + 1.5 mm

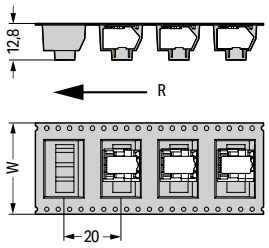

W = tape width
R = feed direction

PU = packaging unit; SPU = subpackaging unit; Dimensions in mm

Variants:
- Other pole numbers
- Direct marking
- Other versions (or variants) can be requested from WAGO Sales or configured at https://configurator.wago.com/.

THR PCB terminal block ▸ 218 Series

CAGE CLAMP® ▸ Actuation type: Slider ▸ Actuation type: Slider ▸ 0.5 mm² ▸ Color: black

Pin spacing: 2.54 mm / 0.1 inches

Suitable for automated assembly





218-504/000-604

Pole number	Item No.	PU (SPU)
2	218-502/000-604	1000 (100)
3	218-503/000-604	1000 (100)
4	218-504/000-604	500 (100)
5	218-505/000-604	500 (100)
6	218-506/000-604	280 (70)
7	218-507/000-604	240 (60)

218-102/000-604/997-403

Pole number	Tape width	Item No.	PU
2	16 mm	218-502/000-604/997-403	250
3	32 mm	218-503/000-604/997-405	250
4	32 mm	218-504/000-604/997-405	250
5	32 mm	218-505/000-604/997-405	250
6	32 mm	218-506/000-604/997-405	250
7	32 mm	218-507/000-604/997-405	250

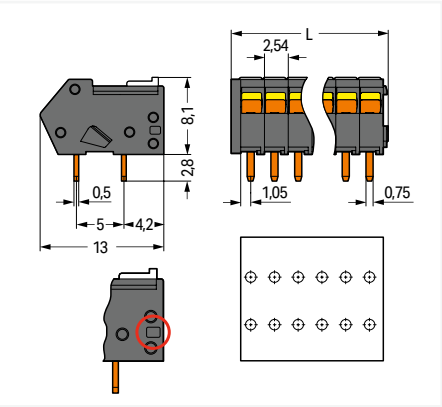

L = (pole no. x pin spacing) + 1.5 mm
A groove at the back of the terminal strip indicates the 2.54 mm pin spacing (red circle).

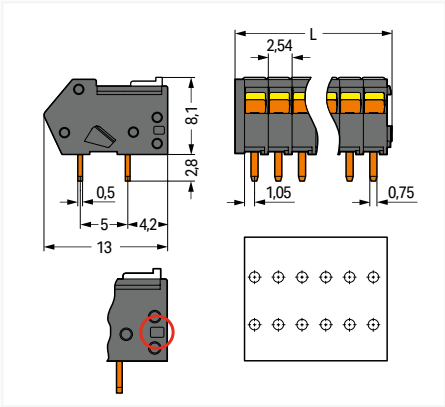

L = (pole no. x pin spacing) + 1.5 mm
A groove at the back of the terminal strip indicates the 2.54 mm pin spacing (red circle).

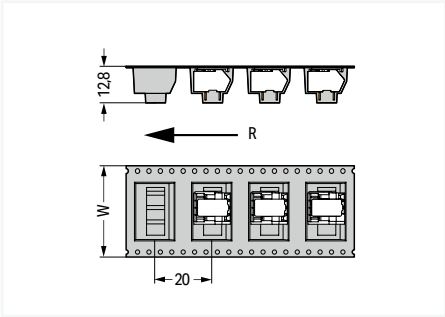

W = tape width
R = feed direction

PU = packaging unit; SPU = subpackaging unit; Dimensions in mm

Variants:
- Other pole numbers
- Direct marking
- Other versions (or variants) can be requested from WAGO Sales or configured at https://configurator.wago.com/.

Operating tool ▸ Suitable for 2060 Series

2

insulated



2060-189

	Item No.	PU (SPU)
	2060-189	300 (50)

metal; partially insulated



206-860

	Item No.	PU
	206-860	5



Inserting/removing fine-stranded conductors by lightly pressing on a push-button.

PU = packaging unit; SPU = subpackaging unit

Operating tool ▸ Suitable for 2061 Series



2061-189

	Item No.	PU (SPU)
	2061-190	300 (50)

PU = packaging unit; SPU = subpackaging unit

Testing accessories ▸ Test plug module ▸ Contact type: A ▸ Test contact length: 10 mm ▸ Suitable for 236 Series ▸ Testing without connected conductor ▸ Pin spacing: 5 mm / 0.197 inches

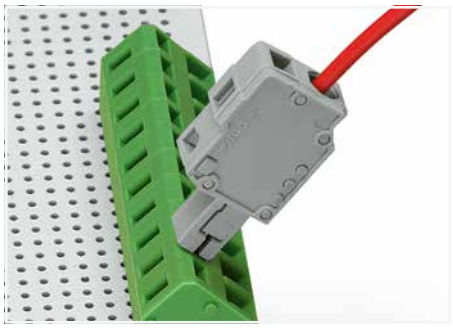

Electrical data				
Ratings per	**IEC/EN 60664-1**			
Overvoltage category	III	III	II	
Pollution degree	3	2	2	
Nominal voltage	-	250 V	-	
Rated impulse withstand voltage	-	2.5 kV	-	
Rated current	-	0.5 A	-	
Connection Data				
Connection technology	CAGE CLAMP®			
Strip length	12 … 13 mm / 0.47 … 0.51 inches			
Solid conductor	0.08 … 2.5 mm² / 28 … 12 AWG			
Fine-stranded conductor	0.08 … 2.5 mm² / 28 … 12 AWG			
Material data				
Material group	I			
Insulation material (main housing)	Polyamide (PA66)			
Flammability class per UL94	V0			
Clamping spring material	Chrome-nickel spring steel (CrNi)			
Contact material	Electrolytic copper (E_{Cu})			
Contact Plating	Tin			
Mechanical data				
Test contact length	10 mm			
Environmental requirements				
Limit temperature range	-60 … +105 °C			
Processing temperature	-35 … +60 °C			

Tool Page 637

See technical section for further information

Approvals and corresponding ratings, visit www.wago.com

Testing accessories ▸ Test plug module ▸ Contact type: A ▸ Test contact length: 10 mm ▸ Suitable for 236 Series ▸ Testing without connected conductor ▸ Pin spacing: 5 mm / 0.197 inches



231-127

Color	Item No.	PU
gray	231-127	100

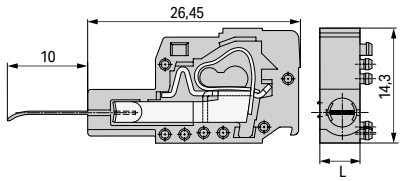

L = pin spacing

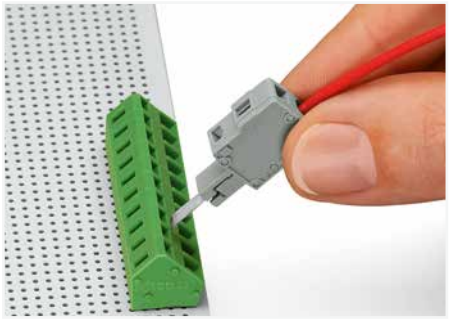

Inserting a test plug module into the operating slot.

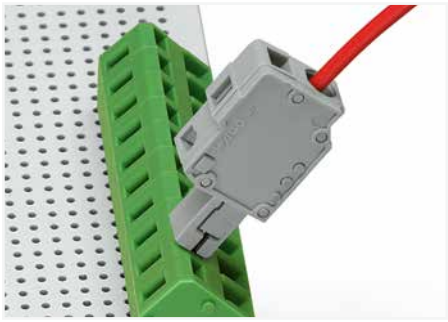

Unwired terminal strip with inserted test plug module



Contact type A:
Testing only when unwired.

Accessories; for all products on this page



End plate; Width: 1.5 mm; snap-on type

Color	Item No.	PU (SPU)
gray	231-100	200 (100)

PU = packaging unit; SPU = subpackaging unit; Dimensions in mm

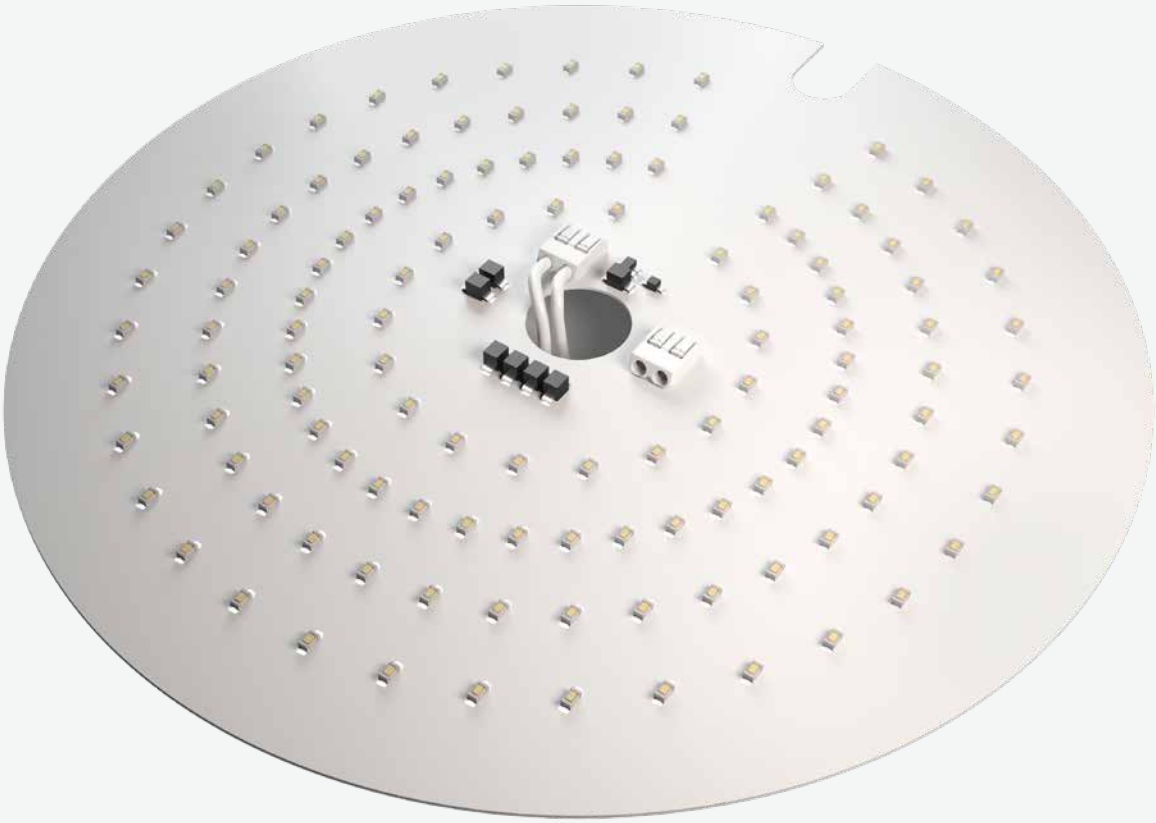

WAGO SMD PCB Terminal Blocks

WAGO SMD PCB Terminal Blocks

		Nominal Cross-Section	Series	Page
	SMD PCB Terminal Blocks ▸ Actuation type: Push-button ▸ PUSH WIRE®	0,34 mm²	2059	354
	SMD PCB Terminal Blocks ▸ Actuation type: Push-button ▸ Push-in CAGE CLAMP®	0,75 mm²	2060	358
	SMD PCB Terminal Blocks ▸ Actuation type: Push-button ▸ Push-in CAGE CLAMP®	1,5 mm²	2061	364
	SMD PCB Terminal Blocks ▸ Actuation type: Push-in ▸ PUSH WIRE® SMD PCB Terminal Blocks ▸ Actuation type: Push-button ▸ Push-in CAGE CLAMP®	0,75 mm² 0,75 mm²	2065 2065	368 370
	Through-Board SMD PCB Terminal Block ▸ Actuation type: Push-in ▸ PUSH WIRE®	0,75 mm²	2075	372
	Through-Board-SMD-Leiterplattenklemmen ▸ Betätigungsart: ▸ Betätigungswerkzeug ▸ Push-in CAGE CLAMP®	0,75 mm²	2070	374
	SMD PCB Terminal Blocks ▸ Actuation type: Push-button ▸ Push-in CAGE CLAMP®	1,5 mm²	2086	380
	Board-to-Board Links for SMD PCB Terminal Blocks	0,5 mm² 0,75 mm² 1,5 mm² 0,75 mm²	2059 2060 2061 2065	398 402 406 410
	Accessories for SMD PCB Terminal Blocks Accessories and Tools			392 1063

SMD PCB terminal block ▸ 2059 Series

PUSH WIRE® ▸ Pin spacing: 3 mm / 0.118 inches ▸ Actuation type: Operating tool ▸ 0.34 mm²



- SMD PCB terminal blocks with PUSH WIRE® connection technology
- Push-in termination of solid conductors
- Easy conductor removal via operating tool
- Just 2.7 mm tall
- Assemble terminal blocks without pole loss
- Available in tape-and-reel packaging for automated assembly

3

Electrical data			
Pin spacing	**3 mm / 0.118 inches**		
Ratings per	**IEC/EN 60664-1**		
Overvoltage category	III	III	II
Pollution degree	3	2	2
Nominal voltage	63 V	160 V	320 V
Rated impulse withstand voltage	2.5 kV	2.5 kV	2.5 kV
Rated current	3 A	3 A	3 A

Connection Data	
Connection technology	PUSH WIRE®
Strip length	4 … 5.5 mm / 0.16 … 0.22 inches
Conductor connection direction to PCB	0 °
Solid conductor	0.14 … 0.34 mm² / 26 … 22 AWG
Note (conductor cross-section)	For conductors (26 AWG) that are not rigid enough, the clamping unit must be opened using an operating tool.
Strip length	6 … 7.5 mm / 0.24 … 0.3 inches
Solid conductor	0.5 mm² / 20 AWG
Note (conductor cross-section)	No reconnection of smaller conductor cross-sections (0.5 mm²/20 AWG)
Material data	
Material group	I
Insulation material (main housing)	Polyphthalamide (PPA GF)
Flammability class per UL94	V0
Contact material	Copper alloy
Contact Plating	Tin
Mechanical data	
Solder pin arrangement	over the entire terminal strip (in-line)
Number of solder pins per potential	2
Reel diameter of tape-and-reel packaging	330 mm
Environmental requirements	
Limit temperature range	-60 … +105 °C

Note:
Application notes:
Suitable for lead-free, reflow-soldering profiles per DIN EN 61760-1 and IEC 60068-2-58 up to max. 260°C peak temperature. Due to application-specific variables (component configuration and orientation, type of soldering machine, solder paste), trial runs are recommended to ensure product and process compatibility under actual manufacturing conditions. Depending on reflow soldering temperatures and times, color deviations may occur. These deviations will have no impact on functionality.
Recommendation for stencil:
150 µm material thickness; Pattern layout identical to solder pad layout

Board-to-board link	Page 399
Tool	Page 392
See technical section for further information	
Approvals and corresponding ratings, visit www.wago.com	

SMD PCB terminal block ▸ 2059 Series

PUSH WIRE® ▸ Pin spacing: 3 mm / 0.118 inches ▸ Actuation type: Operating tool ▸ 0.34 mm²

Color: white



2059-301/998-403

Pole number	Item No.	PU (SPU)
1	2059-301/998-403	31800 (2650)

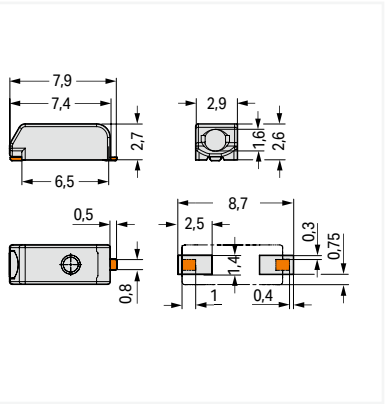

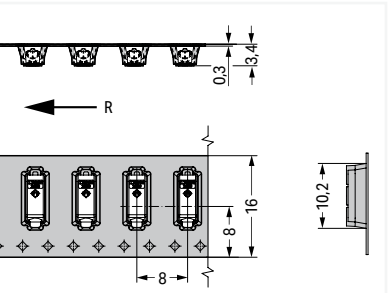

R = feed direction

Color: black



2059-321/998-403

Pole number	Item No.	PU (SPU)
1	2059-321/998-403	31800 (2650)

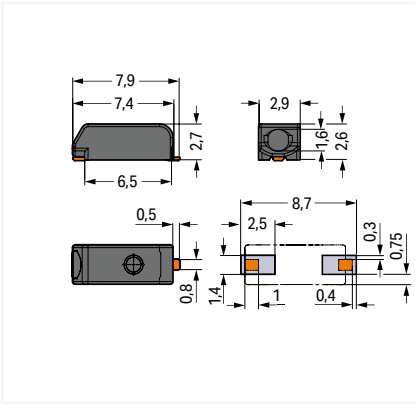

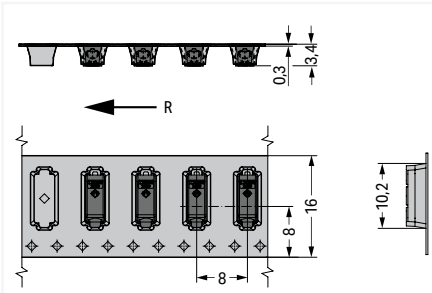

R = feed direction



Insert solid conductors via push-in termination.



Easy conductor removal, e.g., via operating tool (Item No. 206-859) or "twist & pull" (max. 10 x, no reconnection of smaller conductors possible)

PU = packaging unit; SPU = subpackaging unit; Dimensions in mm

SMD PCB terminal block ▸ 2059 Series

PUSH WIRE® ▸ Pin spacing: 3 mm / 0.118 inches ▸ Actuation type: Operating tool ▸ 0.34 mm²

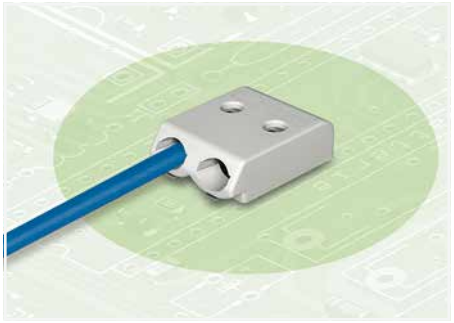

- SMD PCB terminal blocks with PUSH WIRE® connection technology
- Push-in termination of solid conductors
- Easy conductor removal via operating tool
- Just 2.7 mm tall
- Assemble terminal blocks without pole loss
- Available in tape-and-reel packaging for automated assembly

3

Electrical data			
Pin spacing	**3 mm / 0.118 inches**		
Ratings per	**IEC/EN 60664-1**		
Overvoltage category	III	III	II
Pollution degree	3	2	2
Nominal voltage	63 V	160 V	320 V
Rated impulse withstand voltage	2.5 kV	2.5 kV	2.5 kV
Rated current	3 A	3 A	3 A

Connection Data	
Connection technology	PUSH WIRE®
Strip length	4 … 5.5 mm / 0.16 … 0.22 inches
Conductor connection direction to PCB	0 °
Solid conductor	0.14 … 0.34 mm² / 26 … 22 AWG
Note (conductor cross-section)	For conductors (26 AWG) that are not rigid enough, the clamping unit must be opened using an operating tool.
Strip length	6 … 7.5 mm / 0.24 … 0.3 inches
Solid conductor	0.5 mm² / 20 AWG
Note (conductor cross-section)	No reconnection of smaller conductor cross-sections (0.5 mm²/20 AWG)
Material data	
Material group	I
Insulation material (main housing)	Polyphthalamide (PPA GF)
Flammability class per UL94	V0
Contact material	Copper alloy
Contact Plating	Tin
Mechanical data	
Solder pin arrangement	over the entire terminal strip (in-line)
Number of solder pins per potential	2
Reel diameter of tape-and-reel packaging	330 mm
Environmental requirements	
Limit temperature range	-60 … +105 °C

Note:
Application notes:
Suitable for lead-free, reflow-soldering profiles per DIN EN 61760-1 and IEC 60068-2-58 up to max. 260°C peak temperature. Due to application-specific variables (component configuration and orientation, type of soldering machine, solder paste), trial runs are recommended to ensure product and process compatibility under actual manufacturing conditions. Depending on reflow soldering temperatures and times, color deviations may occur. These deviations will have no impact on functionality.
Recommendation for stencil:
150 µm material thickness; Pattern layout identical to solder pad layout

Board-to-board link	Page 399
Tool	Page 392
See technical section for further information	
Approvals and corresponding ratings, visit www.wago.com	

SMD PCB terminal block ▸ 2059 Series

PUSH WIRE® ▸ Pin spacing: 3 mm / 0.118 inches ▸ Actuation type: Operating tool ▸ 0.34 mm²

Color: white



2059-302/998-403

Pole number	Item No.	PU (SPU)
2	**2059-302/998-403**	21000 (1750)
3	**2059-303/998-403**	21000 (1750)

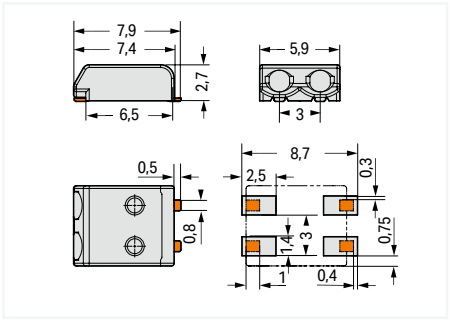

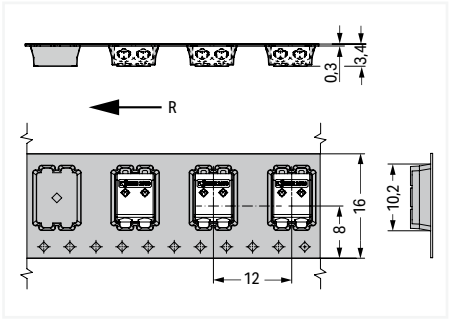

R = feed direction

Color: black



2059-322/998-403

Pole number	Item No.	PU (SPU)
2	**2059-322/998-403**	21000 (1750)
3	**2059-323/998-403**	21000 (1750)

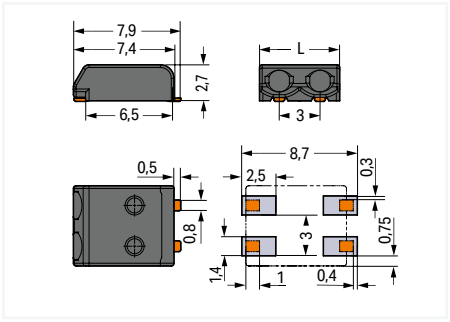

L = (pole no. x pin spacing) – 0.1 mm

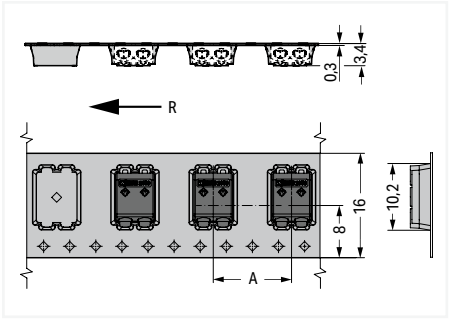

R = feed direction
A = 12 mm (2- and 3-pole)



Insert solid conductors via push-in termination.



Easy conductor removal, e.g., via operating tool (Item No. 206-859) or "twist & pull" (max. 10 x, no reconnection of smaller conductors possible)

PU = packaging unit; SPU = subpackaging unit; Dimensions in mm

SMD PCB terminal block ▸ 2060 Series

Push-in CAGE CLAMP® ▸ Pin spacing: 4 mm / 0.157 inches ▸ Actuation type: Push-button ▸ 0.75 mm²



- SMD PCB terminal blocks with Push-in CAGE CLAMP® connection technology and push-buttons
- Push-in termination of solid and ferruled conductors
- Convenient termination/removal of fine-stranded conductors via push-buttons
- Just 4.5 mm tall
- Available in tape-and-reel packaging for automated assembly

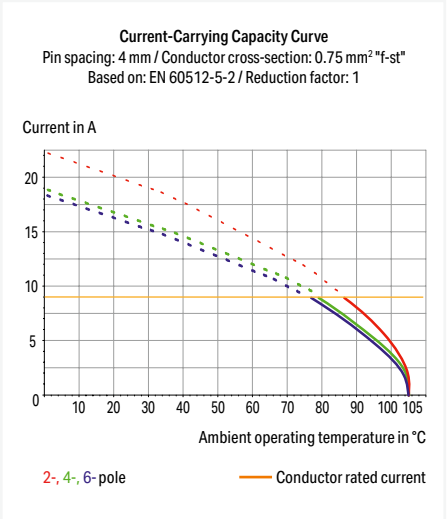

Electrical data			
Pin spacing	**4 mm / 0.157 inches**		
Ratings per	**IEC/EN 60664-1**		
Overvoltage category	III	III	II
Pollution degree	3	2	2
Nominal voltage	63 V	160 V	320 V
Rated impulse withstand voltage	2.5 kV	2.5 kV	2.5 kV
Rated current	9 A	9 A	9 A
Ratings			
Approvals per	UL 1977		
Rated voltage	600 V		
Rated current	9 A		

Connection Data	
Connection technology	Push-in CAGE CLAMP®
Strip length	7 … 9 mm / 0.28 … 0.35 inches
Conductor connection direction to PCB	0 °
Solid conductor	0.2 … 0.75 mm² / 24 … 18 AWG
Fine-stranded conductor	0.2 … 0.75 mm² / 24 … 18 AWG
Fine-stranded conductor; with insulated ferrule	0.25 … 0.34 mm²
Fine-stranded conductor; with uninsulated ferrule	0.25 … 0.34 mm²

Material data	
Material group	I
Insulation material (main housing)	Polyphthalamide (PPA GF)
Flammability class per UL94	V0
Clamping spring material	Copper alloy
Contact material	Copper alloy
Contact Plating	Tin

Mechanical data	
Solder pin arrangement	over the entire terminal strip (in-line)
Number of solder pins per potential	2
Reel diameter of tape-and-reel packaging	330 mm

Environmental requirements	
Limit temperature range	-60 … +105 °C

Note:
Application notes:
Suitable for lead-free, reflow-soldering profiles per DIN EN 61760-1 and IEC 60068-2-58 up to max. 260°C peak temperature. Due to application-specific variables (component configuration and orientation, type of soldering machine, solder paste), trial runs are recommended to ensure product and process compatibility under actual manufacturing conditions. Depending on reflow soldering temperatures and times, color deviations may occur. These deviations will have no impact on functionality.
Recommendation for stencil:
150 µm material thickness; Pattern layout identical to solder pad layout

Board-to-board link	Page 403
Ferrule	Page 1081
Tool	Page 393
See technical section for further information	
Approvals and corresponding ratings, visit www.wago.com	

SMD PCB terminal block ▸ 2060 Series

Push-in CAGE CLAMP® ▸ Pin spacing: 4 mm / 0.157 inches ▸ Actuation type: Push-button ▸ 0.75 mm²

Color: white



2060-451/998-404

Pole number	Item No.	PU (SPU)
1	2060-451/998-404	13500 (1500)

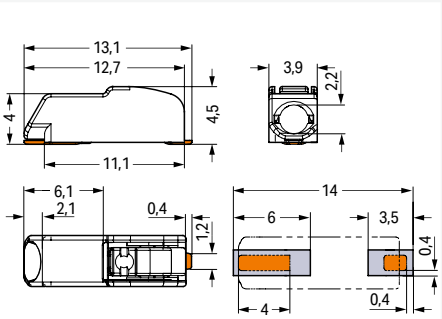

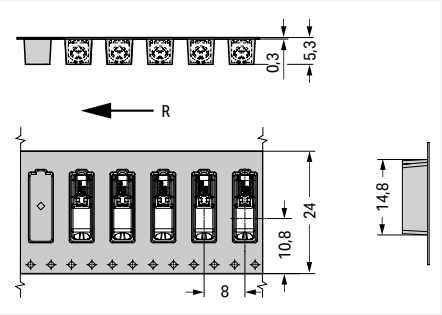

R = feed direction

Color: black



2060-471/998-404

Pole number	Item No.	PU (SPU)
1	2060-471/998-404	13500 (1500)

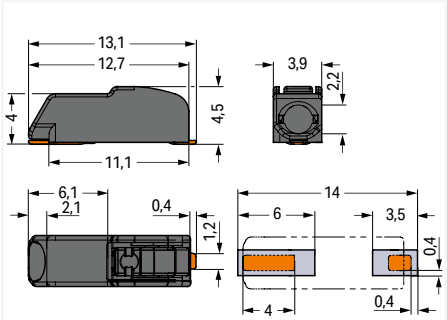

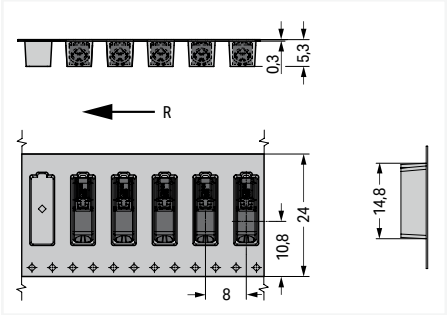

R = feed direction



Insert solid conductors via push-in termination.



Insert/remove fine-stranded conductors by lightly pressing on push-button, e.g., via optional operating tool (206-860).

PU = packaging unit; SPU = subpackaging unit; Dimensions in mm

SMD PCB terminal block ▸ 2060 Series

Push-in CAGE CLAMP® ▸ Pin spacing: 4 mm / 0.157 inches ▸ Actuation type: Push-button ▸ 0.75 mm²

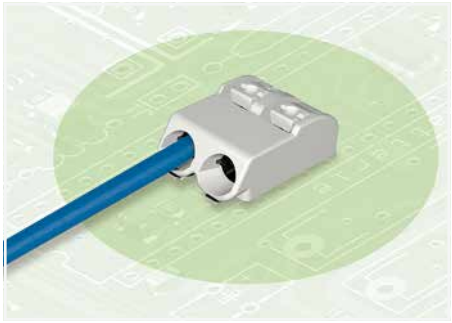

- SMD PCB terminal blocks with Push-in CAGE CLAMP® connection technology and push-buttons
- Push-in termination of solid and ferruled conductors
- Convenient termination/removal of fine-stranded conductors via push-buttons
- Just 4.5 mm tall
- Available in tape-and-reel packaging for automated assembly

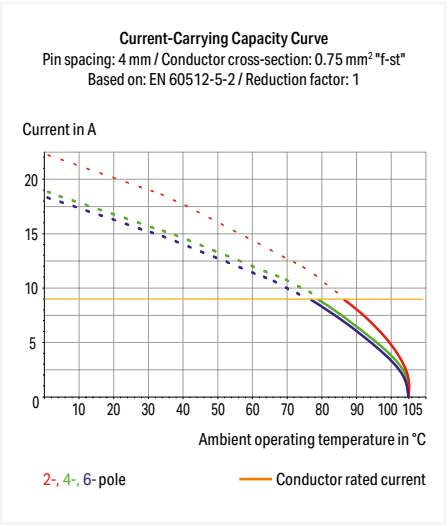

Electrical data			
Pin spacing	**4 mm / 0.157 inches**		
Ratings per	**IEC/EN 60664-1**		
Overvoltage category	III	III	II
Pollution degree	3	2	2
Nominal voltage	63 V	160 V	320 V
Rated impulse withstand voltage	2.5 kV	2.5 kV	2.5 kV
Rated current	9 A	9 A	9 A
Ratings			
Approvals per	UL 1977		
Rated voltage	600 V		
Rated current	9 A		
Connection Data			
Connection technology	Push-in CAGE CLAMP®		
Strip length	7 … 9 mm / 0.28 … 0.35 inches		
Conductor connection direction to PCB	0 °		
Solid conductor	0.2 … 0.75 mm² / 24 … 18 AWG		
Fine-stranded conductor	0.2 … 0.75 mm² / 24 … 18 AWG		
Fine-stranded conductor; with insulated ferrule	0.25 … 0.34 mm²		
Fine-stranded conductor; with uninsulated ferrule	0.25 … 0.34 mm²		
Material data			
Material group	I		
Insulation material (main housing)	Polyphthalamide (PPA GF)		
Flammability class per UL94	V0		
Clamping spring material	Copper alloy		
Contact material	Copper alloy		
Contact Plating	Tin		
Mechanical data			
Solder pin arrangement	over the entire terminal strip (in-line)		
Number of solder pins per potential	2		
Reel diameter of tape-and-reel packaging	330 mm		
Environmental requirements			
Limit temperature range	-60 … +105 °C		

Note:
Application notes:
Suitable for lead-free, reflow-soldering profiles per DIN EN 61760-1 and IEC 60068-2-58 up to max. 260°C peak temperature. Due to application-specific variables (component configuration and orientation, type of soldering machine, solder paste), trial runs are recommended to ensure product and process compatibility under actual manufacturing conditions. Depending on reflow soldering temperatures and times, color deviations may occur. These deviations will have no impact on functionality.
Recommendation for stencil:
150 µm material thickness; Pattern layout identical to solder pad layout

Board-to-board link	Page 403
Ferrule	Page 1081
Tool	Page 393
See technical section for further information	
Approvals and corresponding ratings, visit www.wago.com	

SMD PCB terminal block ▸ 2060 Series

Push-in CAGE CLAMP® ▸ Pin spacing: 4 mm / 0.157 inches ▸ Actuation type: Push-button ▸ 0.75 mm²

Color: white



2060-452/998-404

Pole number	Item No.	PU (SPU)
2	**2060-452/998-404**	9000 (1000)
3	**2060-453/998-404**	6750 (750)

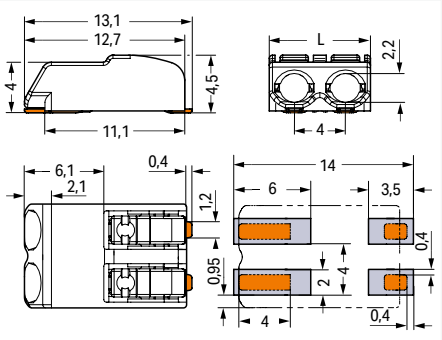

L = (pole no. x pin spacing) – 0.1 mm

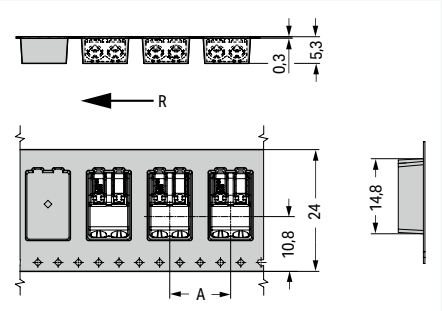

R = feed direction
A = (pole no. x pin spacing) + 4 mm

Color: black



2060-472/998-404

Pole number	Item No.	PU (SPU)
2	**2060-472/998-404**	9000 (1000)
3	**2060-473/998-404**	6750 (750)

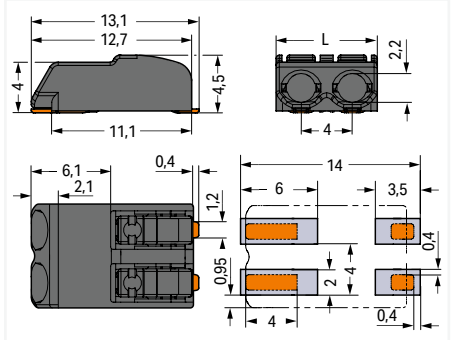

L = (pole no. x pin spacing) – 0.1 mm

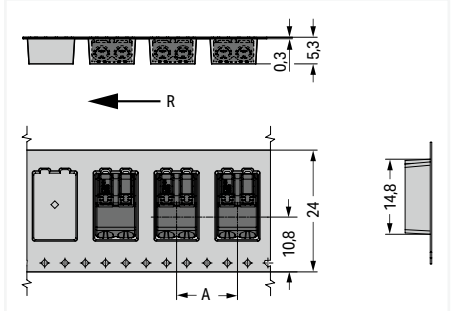

R = feed direction
A = (pole no. x pin spacing) + 4 mm



Insert solid conductors via push-in termination.



Insert/remove fine-stranded conductors by lightly pressing on push-button, e.g., via optional operating tool (206-860).

3

PU = packaging unit; SPU = subpackaging unit; Dimensions in mm

SMD PCB terminal block ▸ 2060 Series

Push-in CAGE CLAMP® ▸ Pin spacing: 8 mm / 0.314 inches ▸ Actuation type: Push-button ▸ 0.75 mm²



- SMD PCB terminal blocks with Push-in CAGE CLAMP® connection technology and push-buttons
- Push-in termination of solid and ferruled conductors
- Convenient termination/removal of fine-stranded conductors via push-buttons
- Just 4.5 mm tall
- Available in tape-and-reel packaging for automated assembly

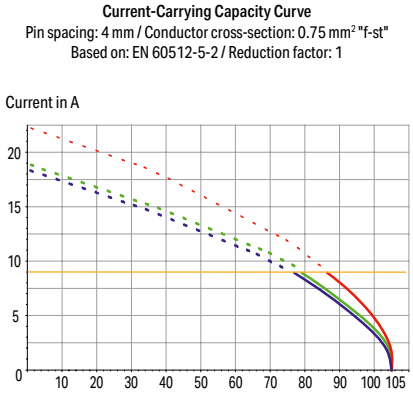

Electrical data			
Pin spacing	**8 mm / 0.314 inches**		
Ratings per	**IEC/EN 60664-1**		
Overvoltage category	III	III	II
Pollution degree	3	2	2
Nominal voltage	400 V	630 V	1000 V
Rated impulse withstand voltage	6 kV	6 kV	6 kV
Rated current	9 A	9 A	9 A
Ratings			
Approvals per	UL 1977		
Rated voltage	600 V		
Rated current	9 A		

Connection Data	
Connection technology	Push-in CAGE CLAMP®
Strip length	7 … 9 mm / 0.28 … 0.35 inches
Conductor connection direction to PCB	0 °
Solid conductor	0.2 … 0.75 mm² / 24 … 18 AWG
Fine-stranded conductor	0.2 … 0.75 mm² / 24 … 18 AWG
Fine-stranded conductor; with insulated ferrule	0.25 … 0.34 mm²
Fine-stranded conductor; with uninsulated ferrule	0.25 … 0.34 mm²

Material data	
Material group	I
Insulation material (main housing)	Polyphthalamide (PPA GF)
Flammability class per UL94	V0
Clamping spring material	Copper alloy
Contact material	Copper alloy
Contact Plating	Tin

Mechanical data	
Solder pin arrangement	over the entire terminal strip (in-line)
Number of solder pins per potential	2
Reel diameter of tape-and-reel packaging	330 mm

Environmental requirements	
Limit temperature range	-60 … +105 °C

Note:
Application notes:
Suitable for lead-free, reflow-soldering profiles per DIN EN 61760-1 and IEC 60068-2-58 up to max. 260°C peak temperature. Due to application-specific variables (component configuration and orientation, type of soldering machine, solder paste), trial runs are recommended to ensure product and process compatibility under actual manufacturing conditions. Depending on reflow soldering temperatures and times, color deviations may occur. These deviations will have no impact on functionality.
Recommendation for stencil:
150 µm material thickness; Pattern layout identical to solder pad layout

Board-to-board link	Page 404
Ferrule	Page 1081
Tool	Page 393
See technical section for further information	
Approvals and corresponding ratings, visit www.wago.com	

SMD PCB terminal block ▸ 2060 Series

Push-in CAGE CLAMP® ▸ Pin spacing: 8 mm / 0.314 inches ▸ Actuation type: Push-button ▸ 0.75 mm²

Color: white



2060-852/998-404

Pole number	Item No.	PU (SPU)
2	2060-852/998-404	6750 (750)

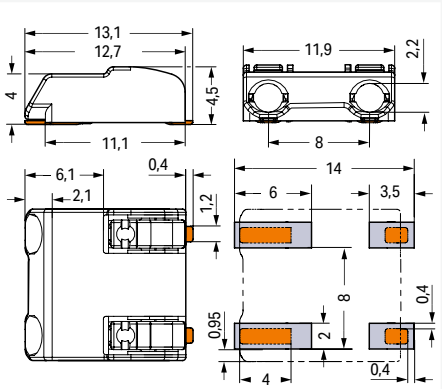

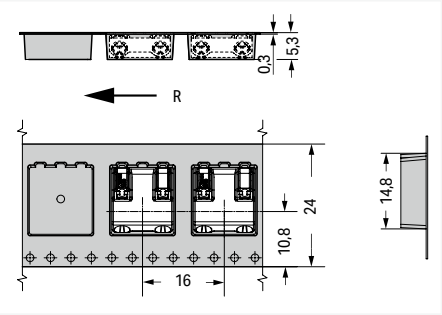

R = feed direction

Color: black



2060-872/998-404

Pole number	Item No.	PU (SPU)
2	2060-872/998-404	6750 (750)

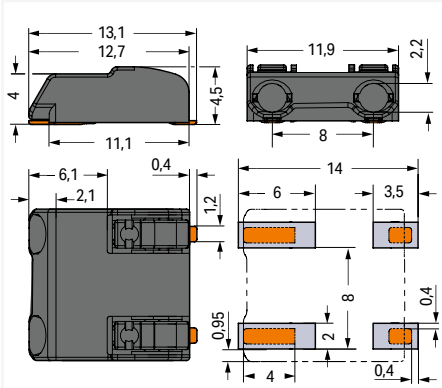

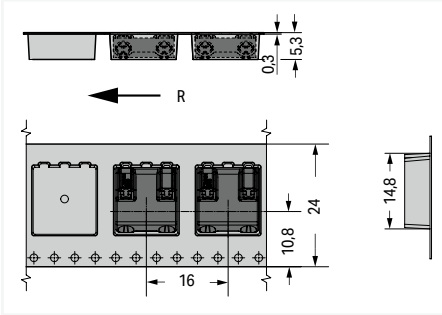

R = feed direction



Insert solid conductors via push-in termination.



Insert/remove fine-stranded conductors by lightly pressing on push-button, e.g., via optional operating tool (206-860).

PU = packaging unit; SPU = subpackaging unit; Dimensions in mm

SMD PCB terminal block ▸ 2061 Series

Push-in CAGE CLAMP® ▸ Pin spacing: 6 mm / 0.24 inches ▸ Actuation type: Push-button ▸ 1.5 mm²

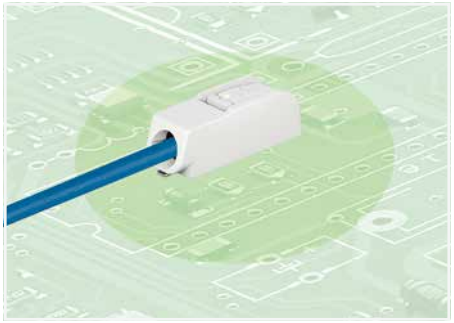

- SMD PCB terminal blocks with Push-in CAGE CLAMP® connection technology and push-buttons
- Just 5.6 mm tall
- Push-in termination of solid and ferruled conductors
- Push-button for easy connection and disconnection of all conductor types
- Available in tape-and-reel packaging for automated assembly

3

Current-Carrying Capacity Curve
Pin spacing: 6 mm / Conductor cross-section: 1.5 mm² "e"
Based on: EN 60512-5-2 / Reduction factor: 1

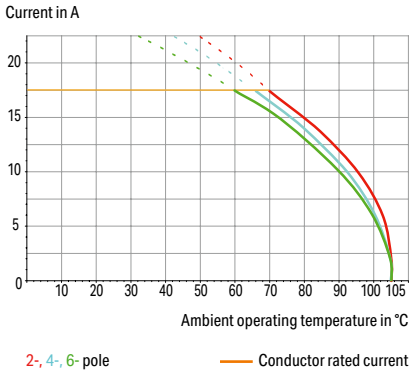

Electrical data			
Pin spacing	**6 mm / 0.24 inches**		
Ratings per	**IEC/EN 60664-1**		
Overvoltage category	III	III	II
Pollution degree	3	2	2
Nominal voltage	250 V	320 V	630 V
Rated impulse withstand voltage	4 kV	4 kV	4 kV
Rated current	17.5 A	17.5 A	17.5 A
Approvals per	**UL 1059**		
Use group	B	C	D
Rated voltage	600 V	-	600 V
Rated current	10 A	-	5 A

Connection Data	
Connection technology	Push-in CAGE CLAMP®
Strip length	7 … 10 mm / 0.28 … 0.39 inches
Conductor connection direction to PCB	0 °
Solid conductor	0.25 … 1.5 mm² / 20 … 16 AWG
Fine-stranded conductor	0.5 … 1.5 mm² / 20 … 16 AWG
Fine-stranded conductor; with insulated ferrule	0.5 … 0.75 mm²
Fine-stranded conductor; with uninsulated ferrule	0.5 … 0.75 mm²
Material data	
Material group	I
Insulation material (main housing)	Polyphthalamide (PPA GF)
Flammability class per UL94	V0
Contact material	Copper alloy
Contact Plating	Tin
Mechanical data	
Solder pin arrangement	over the entire terminal strip (in-line)
Number of solder pins per potential	2
Reel diameter of tape-and-reel packaging	330 mm
Environmental requirements	
Limit temperature range	-60 … +105 °C

Note:
Application notes:
Suitable for lead-free, reflow-soldering profiles per DIN EN 61760-1 and IEC 60068-2-58 up to max. 260°C peak temperature. Due to application-specific variables (component configuration and orientation, type of soldering machine, solder paste), trial runs are recommended to ensure product and process compatibility under actual manufacturing conditions. Depending on reflow soldering temperatures and times, color deviations may occur. These deviations will have no impact on functionality.
Recommendation for stencil:
150 µm material thickness; Pattern layout identical to solder pad layout

Board-to-board link	Page 407
Ferrule	Page 1081
Tool	Page 394
See technical section for further information	
Approvals and corresponding ratings, visit www.wago.com	

SMD PCB terminal block ▸ 2061 Series

Push-in CAGE CLAMP® ▸ Pin spacing: 6 mm / 0.24 inches ▸ Actuation type: Push-button ▸ 1.5 mm²

Color: white



2061-601/998-404

Pole number	Item No.	PU (SPU)
1	2061-601/998-404	8100 (900)

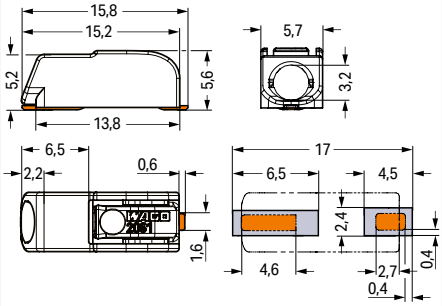

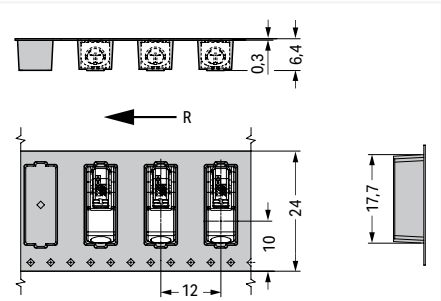

R = feed direction

Color: black



2061-621/998-404

Pole number	Item No.	PU (SPU)
1	2061-621/998-404	8100 (900)

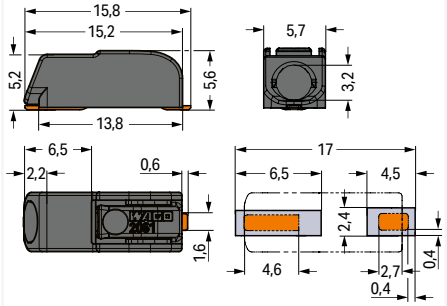

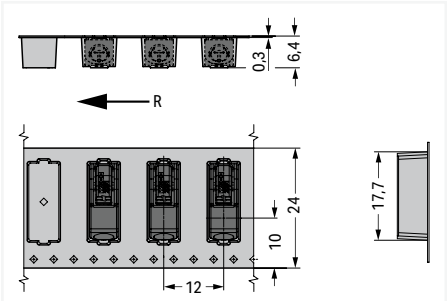

R = feed direction



Inserting solid conductors via push-in termination.



Easy conductor removal, e.g., via operating tool (206-861)

PU = packaging unit; SPU = subpackaging unit; Dimensions in mm

SMD PCB terminal block ▸ 2061 Series

Push-in CAGE CLAMP® ▸ Pin spacing: 6 mm / 0.24 inches ▸ Actuation type: Push-button ▸ 1.5 mm²



- SMD PCB terminal blocks with Push-in CAGE CLAMP® connection technology and push-buttons
- Just 5.6 mm tall
- Push-in termination of solid and ferruled conductors
- Push-button for easy connection and disconnection of all conductor types
- Available in tape-and-reel packaging for automated assembly

Current-Carrying Capacity Curve
Pin spacing: 6 mm / Conductor cross-section: 1.5 mm² "e"
Based on: EN 60512-5-2 / Reduction factor: 1

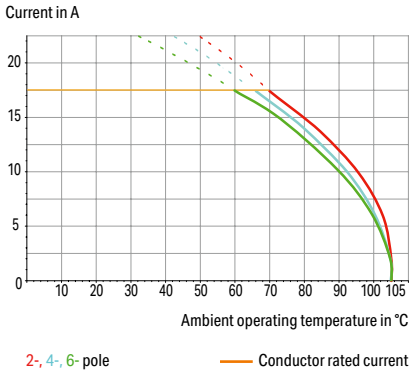

Electrical data			
Pin spacing	**6 mm / 0.24 inches**		
Ratings per	**IEC/EN 60664-1**		
Overvoltage category	III	III	II
Pollution degree	3	2	2
Nominal voltage	250 V	320 V	630 V
Rated impulse withstand voltage	4 kV	4 kV	4 kV
Rated current	17.5 A	17.5 A	17.5 A
Approvals per	**UL 1059**		
Use group	B	C	D
Rated voltage	300 V	-	300 V
Rated current	10 A	-	10 A

Connection Data	
Connection technology	Push-in CAGE CLAMP®
Strip length	7 … 10 mm / 0.28 … 0.39 inches
Conductor connection direction to PCB	0 °
Solid conductor	0.25 … 1.5 mm² / 20 … 16 AWG
Fine-stranded conductor	0.5 … 1.5 mm² / 20 … 16 AWG
Fine-stranded conductor; with insulated ferrule	0.5 … 0.75 mm²
Fine-stranded conductor; with uninsulated ferrule	0.5 … 0.75 mm²
Material data	
Material group	I
Insulation material (main housing)	Polyphthalamide (PPA GF)
Flammability class per UL94	V0
Contact material	Copper alloy
Contact Plating	Tin
Mechanical data	
Solder pin arrangement	over the entire terminal strip (in-line)
Number of solder pins per potential	2
Reel diameter of tape-and-reel packaging	330 mm
Environmental requirements	
Limit temperature range	-60 … +105 °C

Note:
Application notes:
Suitable for lead-free, reflow-soldering profiles per DIN EN 61760-1 and IEC 60068-2-58 up to max. 260°C peak temperature. Due to application-specific variables (component configuration and orientation, type of soldering machine, solder paste), trial runs are recommended to ensure product and process compatibility under actual manufacturing conditions. Depending on reflow soldering temperatures and times, color deviations may occur. These deviations will have no impact on functionality.
Recommendation for stencil:
150 µm material thickness; Pattern layout identical to solder pad layout

Board-to-board link	Page 407
Ferrule	Page 1081
Tool	Page 394
See technical section for further information	
Approvals and corresponding ratings, visit www.wago.com	

SMD PCB terminal block ▸ 2061 Series

Push-in CAGE CLAMP® ▸ Pin spacing: 6 mm / 0.24 inches ▸ Actuation type: Push-button ▸ 1.5 mm²

Color: white



2061-602/998-404

Pole number	Item No.	PU (SPU)
2	**2061-602/998-404**	6300 (700)
3	**2061-603/998-404**	4050 (450)

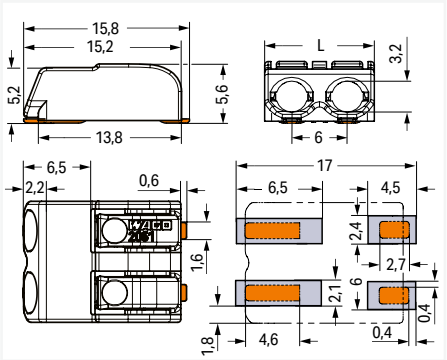

L = (pole no. x pin spacing) – 0.3 mm

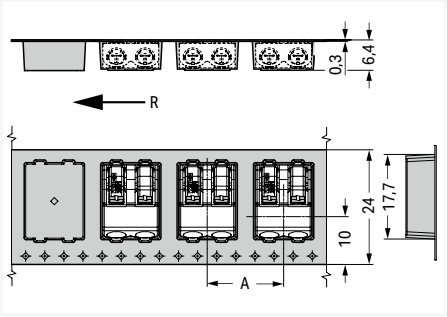

R = feed direction
A = 16 mm (2-pole)
A = 22 mm (3-pole)

Color: black



2061-622/998-404

Pole number	Item No.	PU (SPU)
2	**2061-622/998-404**	6300 (700)
3	**2061-623/998-404**	4050 (450)

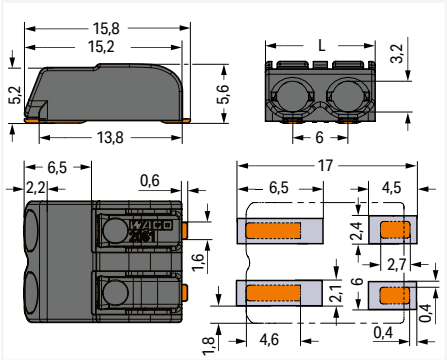

L = (pole no. x pin spacing) – 0.3 mm

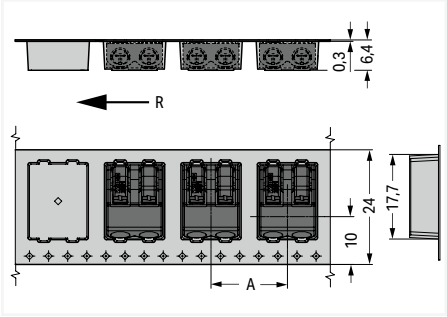

R = feed direction
A = 16 mm (2-pole)
A = 22 mm (3-pole)



Inserting solid conductors via push-in termination.



Easy conductor removal, e.g., via operating tool (206-861)

3

PU = packaging unit; SPU = subpackaging unit; Dimensions in mm

SMD PCB terminal block ▸ 2065 Series

PUSH WIRE® ▸ Pin spacing: 6 mm / 0.236 inches ▸ Actuation type: Push-in ▸ 0.75 mm² ▸ Color: silver-colored

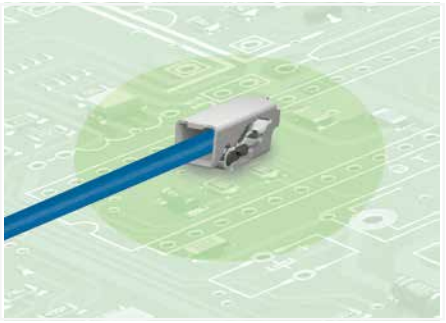

- SMD PCB terminal block with PUSH WIRE® connection technology
- Push-in termination of solid conductors
- Just 2.7 mm tall
- Available in tape-and-reel packaging for automated assembly

3

Electrical data			
Pin spacing	**6 mm / 0.236 inches**		
Ratings per	**IEC/EN 60664-1**		
Overvoltage category	III	III	II
Pollution degree	3	2	2
Nominal voltage	250 V	320 V	630 V
Rated impulse withstand voltage	-	4 kV	4 kV
Rated current	9 A	9 A	9 A

Connection Data	
Connection technology	PUSH WIRE®
Strip length	7.5 … 9.5 mm / 0.3 … 0.37 inches
Conductor connection direction to PCB	0 °
Solid conductor	0.2 … 0.75 mm² / 24 … 18 AWG

Material data	
Clamping spring material	Chrome-nickel spring steel (CrNi)
Contact material	Copper alloy
Contact Plating	Tin

Mechanical data	
Solder pin arrangement	over the entire terminal strip (in-line)
Number of solder pins per potential	1
Reel diameter of tape-and-reel packaging	330 mm

Environmental requirements	
Limit temperature range	-60 … +120 °C

Note:
The ratings are based on an example pin spacing of 6 mm. The layout must meet the requirements of the insulation coordination standard EN/IEC 60664-1 and applicable end product standards.
Notice: Terminal block without insulation housing! Protection against accidental contact must be provided at voltages higher than low voltages (e.g., SELV/PELV) for the relevant application.

Board-to-board link Page 411

See technical section for further information

Approvals and corresponding ratings, visit www.wago.com

SMD PCB terminal block ▸ 2065 Series

PUSH WIRE® ▸ Pin spacing: 6 mm / 0.236 inches ▸ Actuation type: Push-in ▸ 0.75 mm² ▸ Color: silver-colored



2065-101/998-403

Pole number	Item No.	PU (SPU)
1	**2065-101/998-403**	31800 (2650)

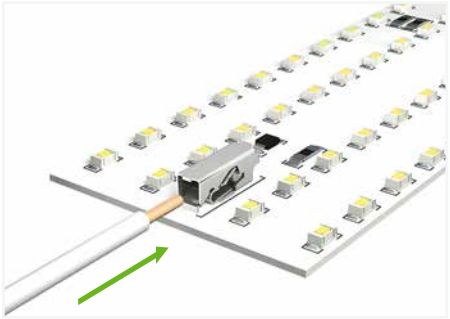

PUSH WIRE® version without push-buttons: Even more space savings when using exclusively solid conductors

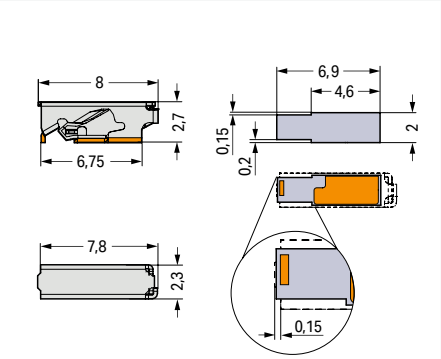

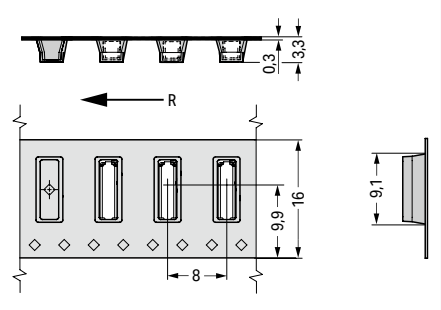

R = feed direction

PU = packaging unit; SPU = subpackaging unit; Dimensions in mm

SMD PCB terminal block ▸ 2065 Series

Push-in CAGE CLAMP® ▸ Pin spacing: 6.5 mm / 0.256 inches ▸ Actuation type: Push-button ▸ 0.75 mm² ▸ Color: silver-colored

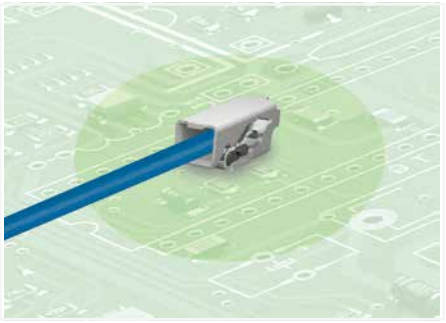

- SMD PCB terminal block with Push-in CAGE CLAMP® connection technology and push-button
- Push-in termination of solid conductors
- Convenient termination/removal of fine-stranded conductors via push-button and operating tool
- Just 2.7 mm tall
- Available in tape-and-reel packaging for automated assembly
- Also available in a PUSH WIRE® variant without push-button (only for solid conductors)
- As if from a single mold: Miniaturized connection technology meets elegant design.
- Slim SMD metal contact enables space-saving and convenient conductor connection.

Electrical data			
Pin spacing	**6.5 mm / 0.256 inches**		
Ratings per	**IEC/EN 60664-1**		
Overvoltage category	III	III	II
Pollution degree	3	2	2
Nominal voltage	-	320 V	630 V
Rated impulse withstand voltage	-	4 kV	4 kV
Rated current	-	9 A	9 A
Ratings			
Approvals per	UL 1977		
Rated voltage	600 V		
Rated current	9 A		
Connection Data			
Connection technology	Push-in CAGE CLAMP®		
Strip length	7.5 … 9.5 mm / 0.3 … 0.37 inches		
Conductor connection direction to PCB	0 °		
Solid conductor	0.2 … 0.75 mm² / 24 … 18 AWG		
Fine-stranded conductor	0.2 … 0.75 mm² / 24 … 18 AWG		
Material data			
Clamping spring material	Chrome-nickel spring steel (CrNi)		
Contact material	Copper alloy		
Contact Plating	Tin		
Mechanical data			
Solder pin arrangement	over the entire terminal strip (in-line)		
Number of solder pins per potential	1		
Reel diameter of tape-and-reel packaging	330 mm		
Environmental requirements			
Limit temperature range	-60 … +120 °C		

Note:
The ratings are based on an example pin spacing of 6.5 mm. The layout must meet the requirements of the insulation coordination standard EN/IEC 60664-1 and applicable end product standards.
Notice: Terminal block without insulation housing! Protection against accidental contact must be provided at voltages higher than low voltages (e.g., SELV/PELV) for the relevant application.

Board-to-board link Page 411
Tool Page 395

See technical section for further information

Approvals and corresponding ratings, visit www.wago.com

SMD PCB terminal block ▸ 2065 Series

Push-in CAGE CLAMP® ▸ Pin spacing: 6.5 mm / 0.256 inches ▸ Actuation type: Push-button ▸ 0.75 mm² ▸ Color: silver-colored



2065-100/998-403

Pole number	Item No.	PU (SPU)
1	2065-100/998-403	31800 (2650)

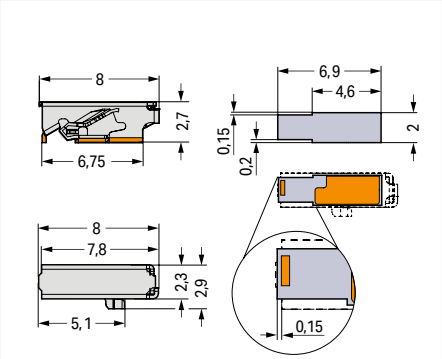

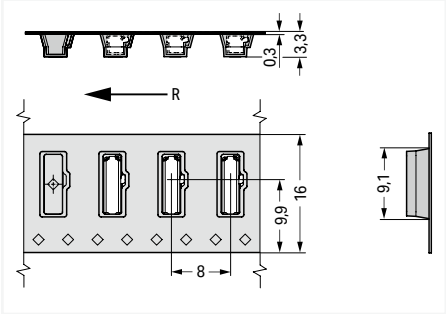

R = feed direction

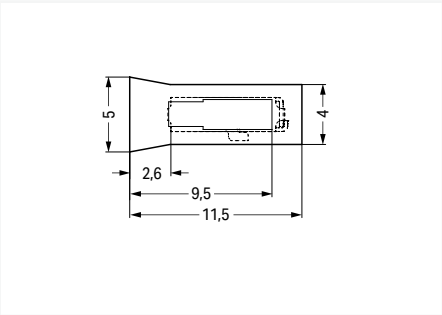

Required space for operating tool

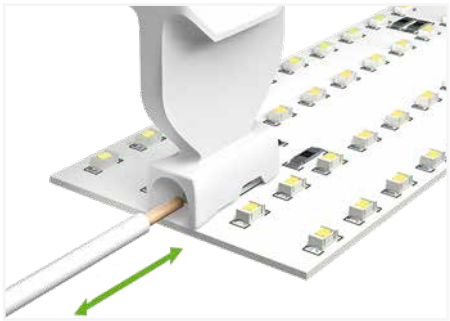

Push-in CAGE CLAMP® variant: Insert fine-stranded conductors and remove all conductor types via operating tool. Solid conductors can also be terminated by simply pushing them in.

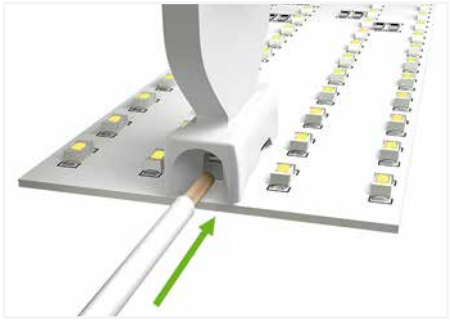

The 2065-189 Operating Tool's funneled conductor entry securely guides all conductor types into the Push-in CAGE CLAMP®.

PU = packaging unit; SPU = subpackaging unit; Dimensions in mm

Through-Board SMD PCB Terminal Block ▸ 2075 Series

PUSH WIRE® ▸ Actuation type: Push-in ▸ 0.75 mm² ▸ Color: silver-colored



- For vertical wiring
- Wiring performed on the back of the LED module simplifies lighting manufacturing
- Low installation height minimizes on-board LED shadowing
- Compact design provides uniform light distribution
- An economical alternative to wire soldering
- For manual and automated wiring systems

3

Electrical data				
Ratings per	**IEC/EN 60664-1**			
Overvoltage category	III	III	II	
Pollution degree	3	2	2	
Nominal voltage	-	-	500 V	
Rated impulse withstand voltage	-	-	4 kV	
Rated current	-	-	9 A	

Connection Data	
Connection technology	PUSH WIRE®
Strip length	3.7 mm / 0.15 inches
Conductor connection direction to PCB	90 °
Solid conductor	0.34 … 0.75 mm² / 20 … 18 AWG

Material data	
Flammability class per UL94	V0
Clamping spring material	Copper alloy
Contact material	Electrolytic copper (E_{Cu})
Contact Plating	Tin

Mechanical data	
Number of solder pins per potential	2
Reel diameter of tape-and-reel packaging	330 mm

Environmental requirements	
Limit temperature range	-60 … +105 °C

Note:
Terminal block without insulation housing!

Protection against accidental contact must be provided at voltages higher than low voltages (e.g., SELV/PELV) for the relevant application.

See technical section for further information

Approvals and corresponding ratings, visit www.wago.com

Through-Board SMD PCB Terminal Block ▸ 2075 Series

PUSH WIRE® ▸ Actuation type: Push-in ▸ 0.75 mm² ▸ Color: silver-colored



2075-381/997-404

Pole number	Item No.	PU (SPU)
1	**2075-381/997-404**	18000 (2000)

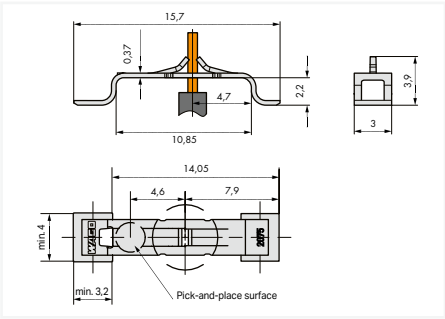

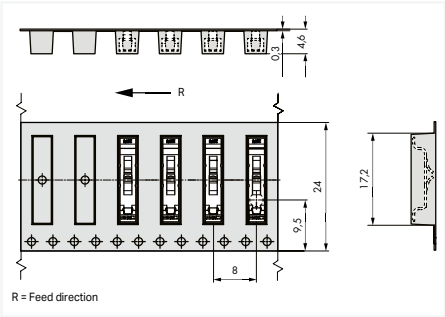

PU = packaging unit; SPU = subpackaging unit; Dimensions in mm

Through-Board SMD PCB Terminal Block ▸ 2070 Series

Push-in CAGE CLAMP® ▸ Pin spacing: 6.5 mm / 0.256 inches ▸ Actuation type: Operating tool ▸ 0.75 mm² ▸ Color: white

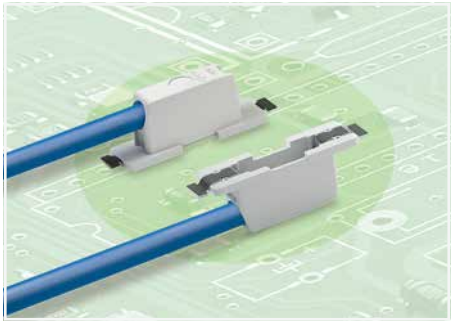

- SMD PCB terminal block with Push-in CAGE CLAMP® for back-side wiring of LED modules
- Low profile of just 1.1 mm on the module's front side
- Push-in termination of solid conductors
- Insert fine-stranded conductors and remove all conductors via operating tool

3

Electrical data				
Pin spacing	**6.5 mm / 0.256 inches**			
Ratings	**Electrical data for FR4 PCB type**			
Ratings per	IEC/EN 60664-1			
Overvoltage category	III	III	II	
Pollution degree	3	2	2	
Nominal voltage	320 V	320 V	630 V	
Rated impulse withstand voltage	4 kV	4 kV	4 kV	
Rated current	9 A	9 A	9 A	
Ratings	**Electrical data for metal-core PCBs**			
Ratings per	IEC/EN 60664-1			
Overvoltage category	III	III	II	
Pollution degree	3	2	2	
Nominal voltage	200 V	320 V	500 V	
Rated impulse withstand voltage	4 kV	4 kV	4 kV	
Rated current	9 A	9 A	9 A	
Ratings				
Approvals per	UL 1977			
Rated voltage	600 V			
Rated current	9 A			
Connection Data				
Connection technology	Push-in CAGE CLAMP®			
Strip length	8 … 10 mm / 0.31 … 0.39 inches			
Conductor connection direction to PCB	0 °			
Solid conductor	0.2 … 0.75 mm² / 24 … 18 AWG			
Fine-stranded conductor	0.2 … 0.75 mm² / 24 … 18 AWG			
Material data				
Material group	I			
Insulation material (main housing)	Polyphthalamide (PPA GF)			
Flammability class per UL94	V0			
Contact material	Copper alloy			
Contact Plating	Tin			
Mechanical data				
Solder pin arrangement	over the entire terminal strip (in-line)			
Number of solder pins per potential	2			
Reel diameter of tape-and-reel packaging	330 mm			
Environmental requirements				
Limit temperature range	-60 … +105 °C			

Note:
Depending on reflow soldering temperatures and times, color deviations may occur. These deviations will have no impact on functionality.

Tool Page 396

See technical section for further information

Approvals and corresponding ratings, visit www.wago.com

Through-Board SMD PCB Terminal Block ▸ 2070 Series

Push-in CAGE CLAMP® ▸ Pin spacing: 6.5 mm / 0.256 inches ▸ Actuation type: Operating tool ▸ 0.75 mm² ▸ Color: white

without cover



2070-451/998-406

Pole number	Item No.	PU (SPU)
1	**2070-451/998-406**	4770 (954)

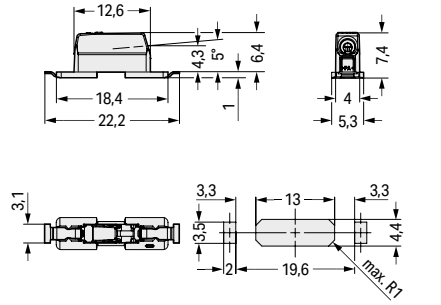

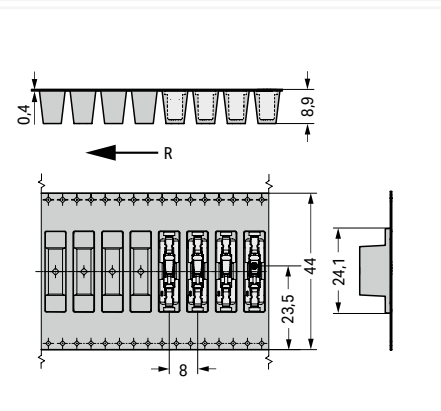

R = feed direction

without cover



2070-452/998-406

Pole number	Item No.	PU (SPU)
2	**2070-452/998-406**	2385 (477)

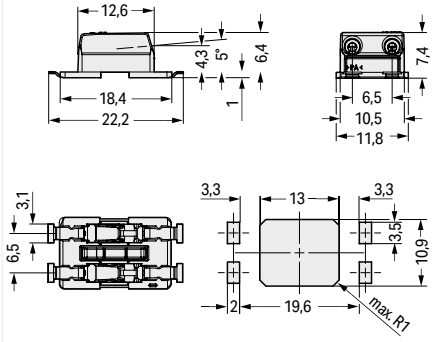

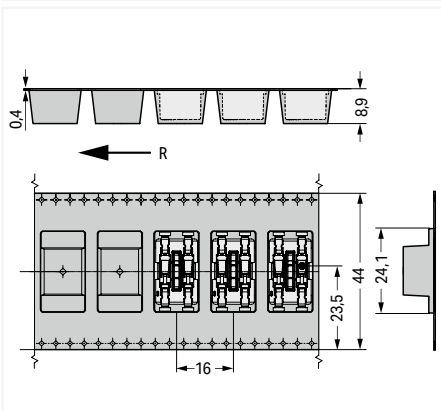

R = feed direction

without cover

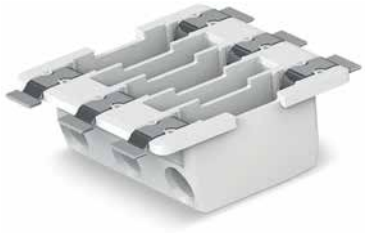

2070-453/998-406

Pole number	Item No.	PU (SPU)
3	**2070-453/998-406**	1590 (318)

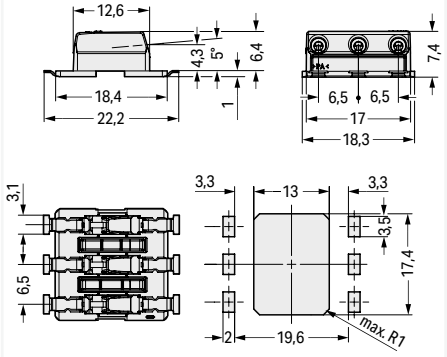

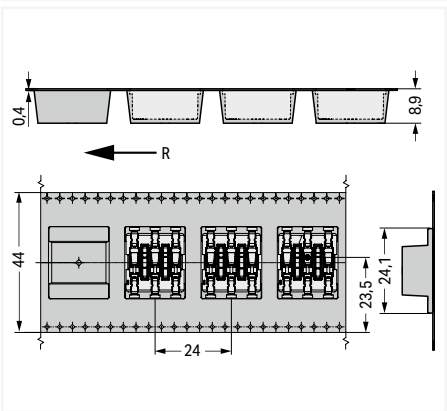

R = feed direction

PU = packaging unit; SPU = subpackaging unit; Dimensions in mm

Variants:

- Reel diameter of tape-and-reel packaging: 381 mm
- Other versions (or variants) can be requested from WAGO Sales or configured at https://configurator.wago.com/.

Through-Board SMD PCB Terminal Block ▸ 2070 Series

Push-in CAGE CLAMP® ▸ Pin spacing: 6.5 mm / 0.256 inches ▸ Actuation type: Operating tool ▸ 0.75 mm² ▸ Color: white

3

with cover



2070-461/998-406

Pole number	Item No.	PU (SPU)
1	2070-461/998-406	4770 (954)

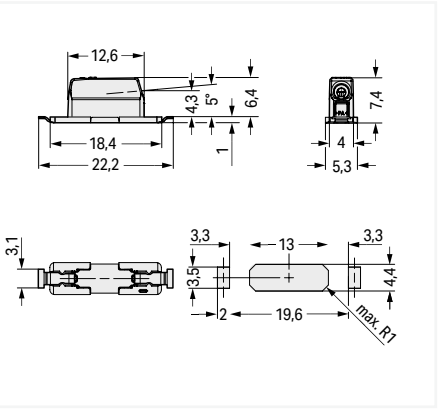

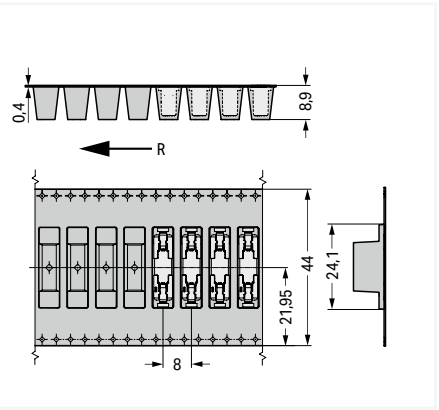

R = feed direction

with cover



2070-462/998-406

Pole number	Item No.	PU (SPU)
2	2070-462/998-406	2385 (477)

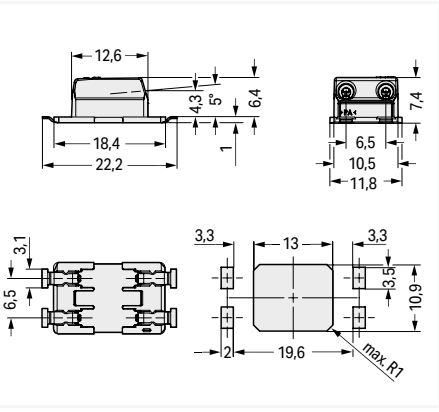

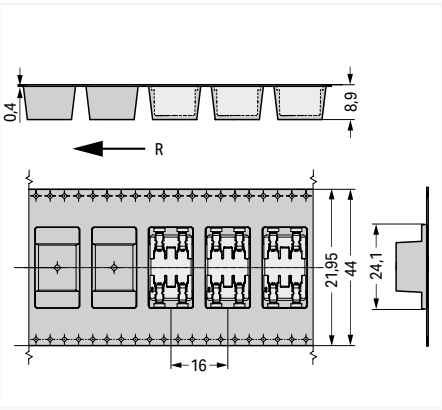

R = feed direction

with cover



2070-463/998-406

Pole number	Item No.	PU (SPU)
3	2070-463/998-406	1590 (318)

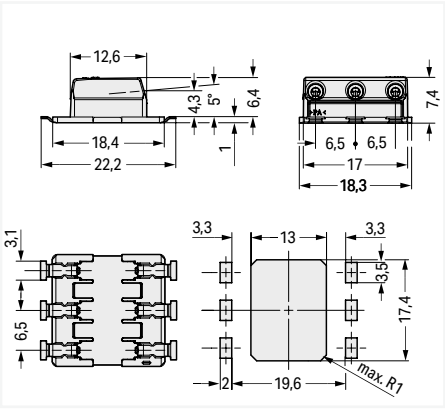

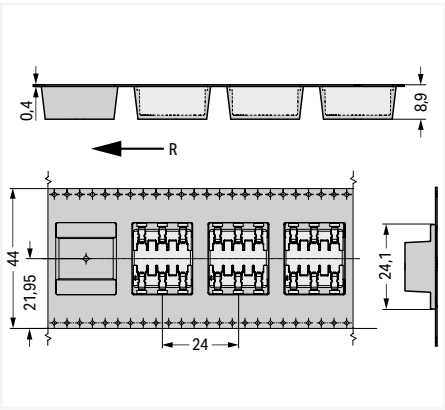

R = feed direction

PU = packaging unit; SPU = subpackaging unit; Dimensions in mm

Variants:

- Reel diameter of tape-and-reel packaging: 381 mm
- Other versions (or variants) can be requested from WAGO Sales or configured at https://configurator.wago.com/.

Through-Board SMD PCB Terminal Block ▸ 2070 Series

Push-in CAGE CLAMP® ▸ Pin spacing: 6.5 mm / 0.256 inches ▸ Actuation type: Operating tool ▸ 0.75 mm² ▸ Color: white

with cover ▸ Marking: +



2070-521/998-406

Pole number	Item No.	PU (SPU)
1	**2070-521/998-406**	4770 (954)

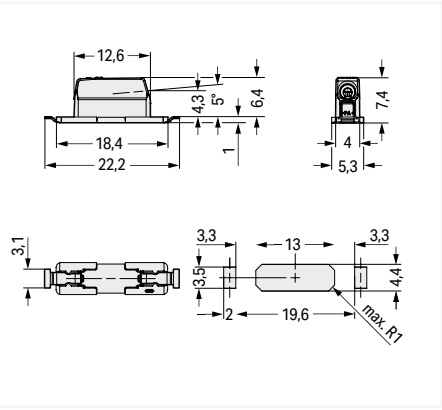

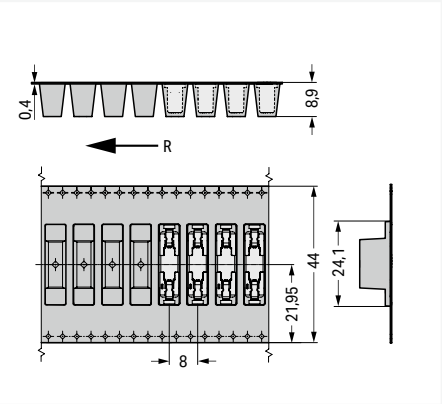

R = feed direction

with cover ▸ Marking: + -



2070-522/998-406

Pole number	Item No.	PU (SPU)
2	**2070-522/998-406**	2385 (477)

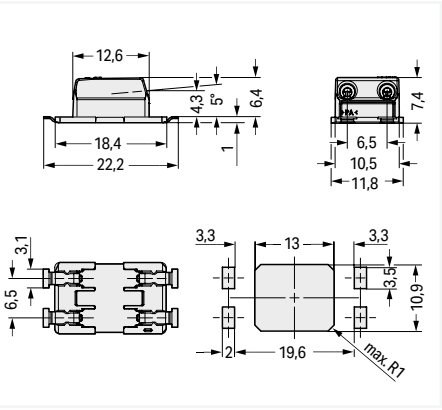

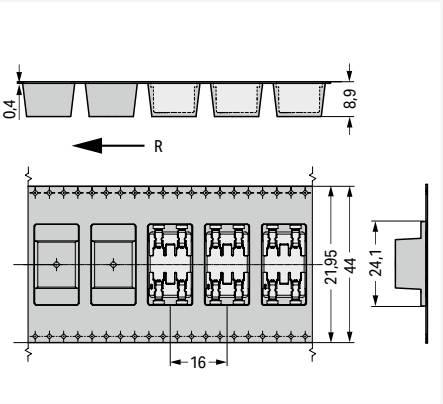

R = feed direction

with cover ▸ Marking: + - plain



2070-523/998-406

Pole number	Item No.	PU (SPU)
3	**2070-523/998-406**	1590 (318)

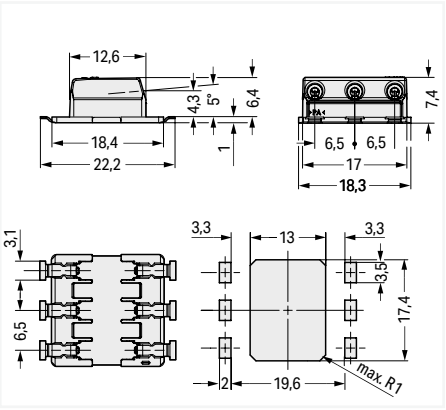

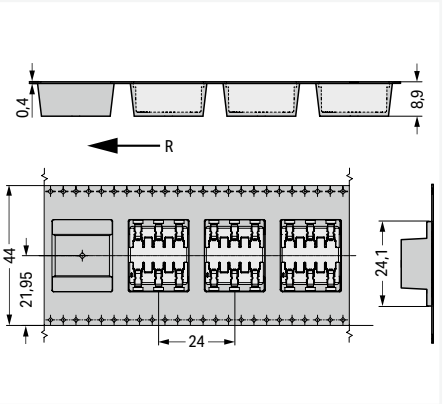

R = feed direction

PU = packaging unit; SPU = subpackaging unit; Dimensions in mm

Variants:

- Reel diameter of tape-and-reel packaging: 381 mm
- Other versions (or variants) can be requested from WAGO Sales or configured at https://configurator.wago.com/.

Through-Board SMD PCB Terminal Block ▸ 2070 Series

Push-in CAGE CLAMP® ▸ Pin spacing: 6.5 mm / 0.256 inches ▸ Actuation type: Operating tool ▸ 0.75 mm² ▸ Color: white

3

with cover ▸ Marking: -



2070-541/998-406

Pole number	Item No.	PU (SPU)
1	2070-541/998-406	4770 (954)

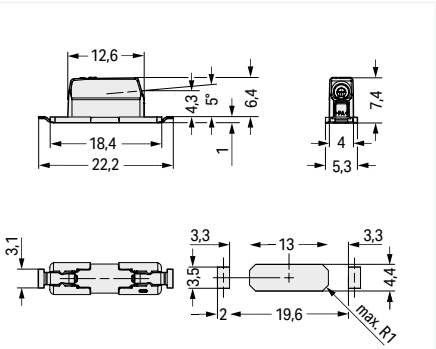

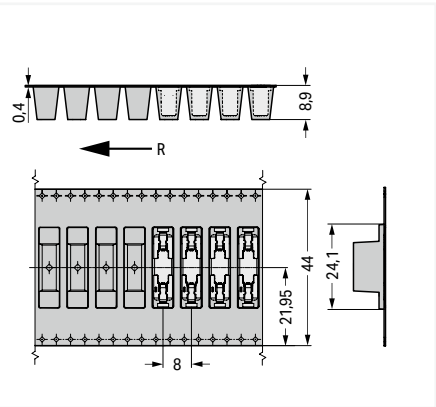

R = feed direction

with cover ▸ Marking: - +



2070-542/998-406

Pole number	Item No.	PU (SPU)
2	2070-542/998-406	2385 (477)

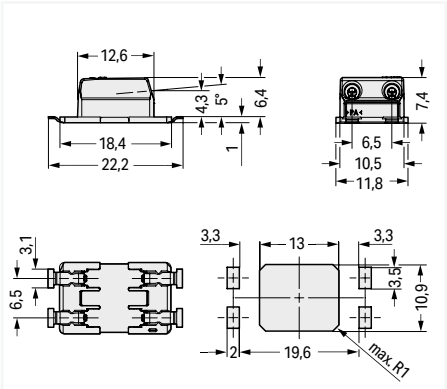

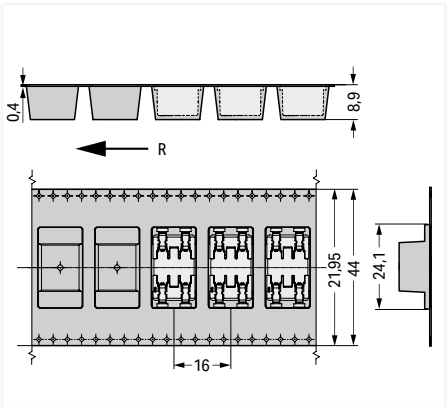

R = feed direction

with cover ▸ Marking: plain - +



2070-543/998-406

Pole number	Item No.	PU (SPU)
3	2070-543/998-406	1590 (318)

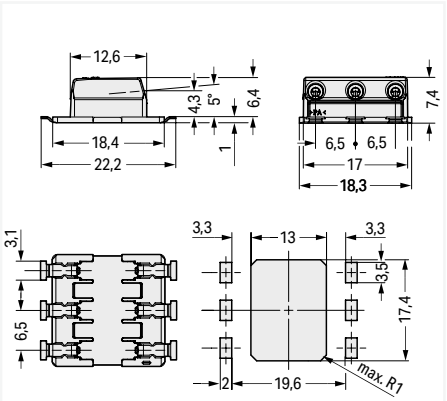

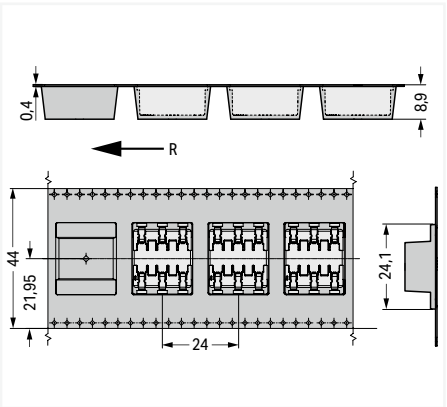

R = feed direction

PU = packaging unit; SPU = subpackaging unit; Dimensions in mm

Variants:

- Reel diameter of tape-and-reel packaging: 381 mm
- Other versions (or variants) can be requested from WAGO Sales or configured at https://configurator.wago.com/.

Through-Board SMD PCB Terminal Block ▸ 2070 Series

Push-in CAGE CLAMP® ▸ Pin spacing: 6.5 mm / 0.256 inches ▸ Actuation type: Operating tool ▸ 0.75 mm² ▸ Color: white

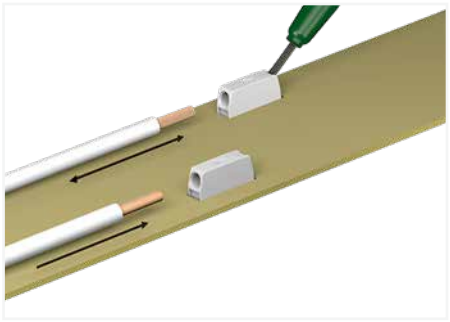

Insert fine-stranded conductors and remove all conductor types via operating tool. Solid conductors can also be terminated by simply pushing them in.

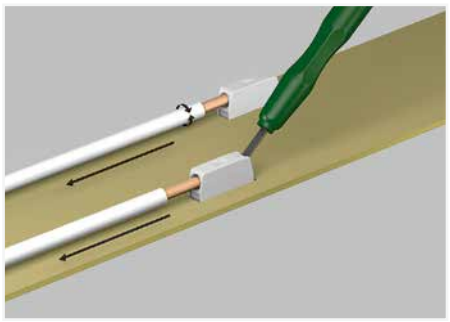

Use an operating tool or simply “twist and pull” to remove solid conductors.

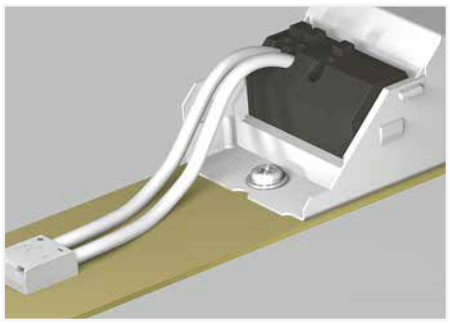

Shift wiring to the back of the LED module via 2070 Series SMD PCB Terminal Blocks.

SMD PCB terminal block ▸ 2086 Series

Push-in CAGE CLAMP® ▸ Actuation type : Push-button ▸ 1.5 mm² ▸ Pin spacing: 3.5 mm / 0.138 inches



- Ideal for compact device connection, panel feedthrough and tight spaces
- Push-in CAGE CLAMP® termination of solid and ferruled fine-stranded conductors
- SMD and THR variants available
- Delivery in tape-and-reel packaging for full integration into SMT soldering process
- Push-button moves in direction of conductor connection
- Conductor connection and mating direction parallel or perpendicular to the PCB

3

Current-Carrying Capacity Curve
Pin spacing: 3.5 mm / Conductor cross-section: 1.5 mm² "f-st"
Based on: EN 60512-5-2 / Reduction factor: 1

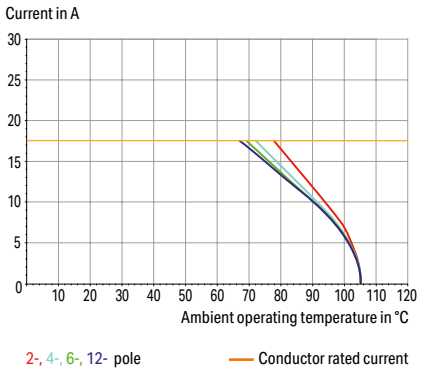

Electrical data			
Ratings per	**IEC/EN 60664-1**		
Overvoltage category	III	III	II
Pollution degree	3	2	2
Nominal voltage	160 V	160 V	320 V
Rated impulse withstand voltage	2.5 kV	2.5 kV	2.5 kV
Rated current	17.5 A	17.5 A	17.5 A
Approvals per	**UL 1059**		
Use group	B	C	D
Rated voltage	300 V	-	300 V
Rated current	14 A	-	10 A
Approvals per	**CSA**		
Use group	B	C	D
Rated voltage	300 V	-	300 V
Rated current	14 A	-	14 A

Connection Data	
Connection technology	Push-in CAGE CLAMP®
Strip length	8 … 9 mm / 0.31 … 0.35 inches
Solid conductor	0.14 … 1.5 mm² / 28 … 16 AWG
Fine-stranded conductor	0.14 … 1.5 mm² / 26 … 14 AWG
Fine-stranded conductor; with insulated ferrule	0.25 … 0.75 mm²
Fine-stranded conductor; with uninsulated ferrule	0.25 … 1.5 mm²

Material data	
Material group	I
Insulation material (main housing)	Polyphthalamide (PPA GF)
Flammability class per UL94	V0
Clamping spring material	Chrome-nickel spring steel (CrNi)
Contact material	Electrolytic copper (E_{Cu})
Contact Plating	Tin

Mechanical data	
Solder pin arrangement	over the entire terminal strip (in-line)
Number of solder pins per potential	2
Reel diameter of tape-and-reel packaging	380 mm

Environmental requirements	
Limit temperature range	-60 … +105 °C
Processing temperature	-35 … +60 °C
Continuous operating temperature	-60 … +105 °C

Ferrule	Page 1081
Test and measurement	Page 1088
Tool	Page 1072
See technical section for further information	
Approvals and corresponding ratings, visit www.wago.com	

SMD PCB terminal block ▸ 2086 Series

Push-in CAGE CLAMP® ▸ Actuation type : Push-button ▸ 1.5 mm² ▸ Pin spacing: 3.5 mm / 0.138 inches

Color: black

Conductor connection direction to PCB: 0 °

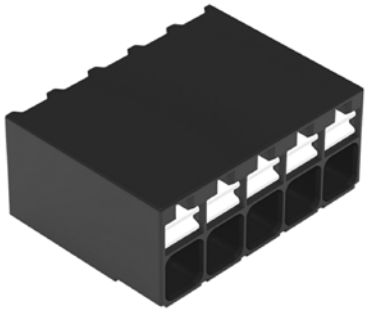

2086-1205/700-000/997-605

Pole number	Tape width	Item No.	PU (SPU)
2	24 mm	**2086-1202/700-000/997-604**	4635 (515)
3	32 mm	**2086-1203/700-000/997-605**	3605 (515)
4	32 mm	**2086-1204/700-000/997-605**	3605 (515)
5	32 mm	**2086-1205/700-000/997-605**	3605 (515)
6	56 mm	**2086-1206/700-000/997-607**	2060 (515)
7	56 mm	**2086-1207/700-000/997-607**	2060 (515)
8	56 mm	**2086-1208/700-000/997-607**	2060 (515)
9	56 mm	**2086-1209/700-000/997-607**	2060 (515)
10	56 mm	**2086-1210/700-000/997-607**	2060 (515)
11	56 mm	**2086-1211/700-000/997-607**	2060 (515)
12	56 mm	**2086-1212/700-000/997-607**	2060 (515)

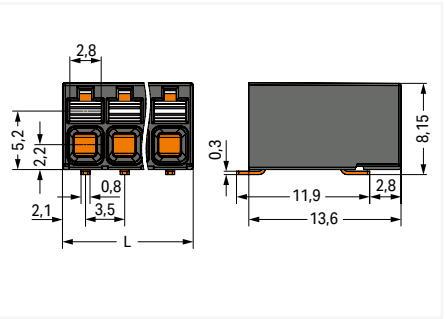

L = (pole no. – 1) x pin spacing + 4.2 mm

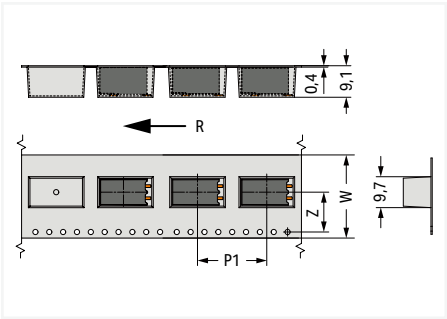

W= Tape width
R = Feed direction
Pole no. 2: Z = 11.5 mm
Pole no. 3: Z = 10.7 mm
Pole no. 4: Z = 12.5 mm
Pole no. 5: Z = 14.2 mm
Pole no. 6; 8; 10; 12: Z = 26.2 mm
Pole no. 7; 9; 11: Z = 24.5 mm

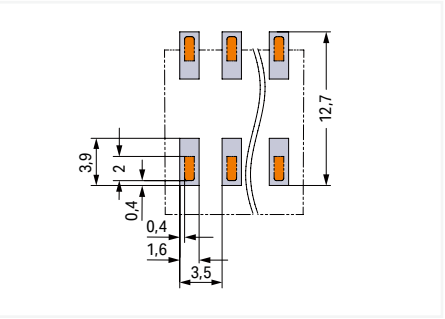

PU = packaging unit; SPU = subpackaging unit; Dimensions in mm

SMD PCB terminal block ▸ 2086 Series

Push-in CAGE CLAMP® ▸ Actuation type : Push-button ▸ 1.5 mm² ▸ Pin spacing: 3.5 mm / 0.138 inches

Color: black

Conductor connection direction to PCB: 90 °



2086-1105/700-000/997-605

Pole number	Tape width	Item No.	PU (SPU)
2	24 mm	**2086-1102/700-000/997-604**	2430 (270)
3	32 mm	**2086-1103/700-000/997-605**	1890 (270)
4	32 mm	**2086-1104/700-000/997-605**	1890 (270)
5	32 mm	**2086-1105/700-000/997-605**	1890 (270)
6	56 mm	**2086-1106/700-000/997-607**	1080 (270)
7	56 mm	**2086-1107/700-000/997-607**	1080 (270)
8	56 mm	**2086-1108/700-000/997-607**	1080 (270)
9	56 mm	**2086-1109/700-000/997-607**	1080 (270)
10	56 mm	**2086-1110/700-000/997-607**	1080 (270)
11	56 mm	**2086-1111/700-000/997-607**	1080 (270)
12	56 mm	**2086-1112/700-000/997-607**	1080 (270)

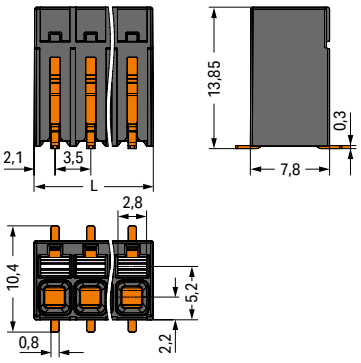

L = (pole no. – 1) x pin spacing + 4.2 mm

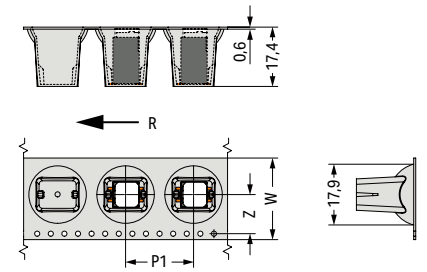

W= Tape width
R = Feed direction
Pole no. 2: Z = 11.5 mm
Pole no. 3 ... 5: Z = 12.4 mm
Pole no. 6 ... 12: Z = 26.2 mm

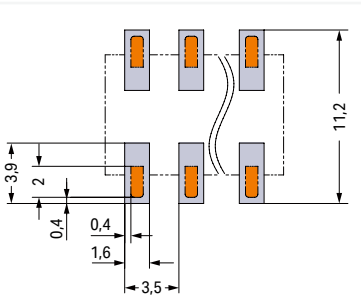

PU = packaging unit; SPU = subpackaging unit; Dimensions in mm

SMD PCB terminal block ▸ 2086 Series

Push-in CAGE CLAMP® ▸ Actuation type : Push-button ▸ 1.5 mm² ▸ Pin spacing: 3.5 mm / 0.138 inches

Color: white

Conductor connection direction to PCB: 0 °

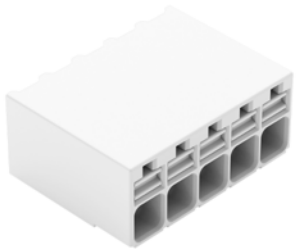

2086-1205/700-650/997-605

Pole number	Tape width	Item No.	PU (SPU)
2	24 mm	**2086-1202/700-650/997-604**	4635 (515)
3	32 mm	**2086-1203/700-650/997-605**	3605 (515)
4	32 mm	**2086-1204/700-650/997-605**	3605 (515)
5	32 mm	**2086-1205/700-650/997-605**	3605 (515)
6	56 mm	**2086-1206/700-650/997-607**	2060 (515)
7	56 mm	**2086-1207/700-650/997-607**	2060 (515)
8	56 mm	**2086-1208/700-650/997-607**	2060 (515)
9	56 mm	**2086-1209/700-650/997-607**	2060 (515)
10	56 mm	**2086-1210/700-650/997-607**	2060 (515)
11	56 mm	**2086-1211/700-650/997-607**	2060 (515)
12	56 mm	**2086-1212/700-650/997-607**	2060 (515)

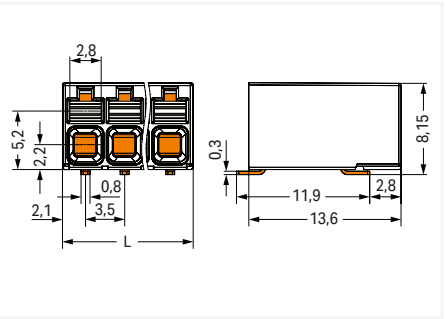

L = (pole no. – 1) x pin spacing + 4.2 mm

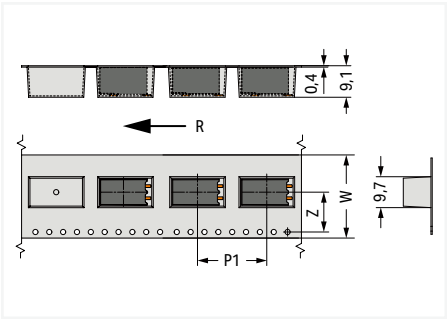

W= Tape width
R = Feed direction
Pole no. 2: Z = 11.5 mm
Pole no. 3: Z = 10.7 mm
Pole no. 4: Z = 12.5 mm
Pole no. 5: Z = 14.2 mm
Pole no. 6; 8; 10; 12: Z = 26.2 mm
Pole no. 7; 9; 11: Z = 24.5 mm

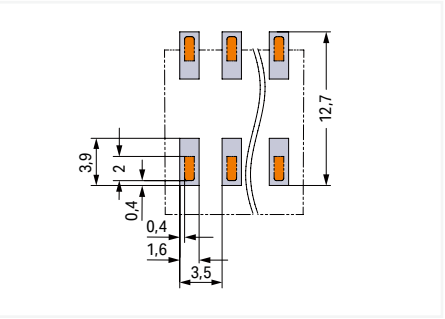

PU = packaging unit; SPU = subpackaging unit; Dimensions in mm

SMD PCB terminal block ▸ 2086 Series

Push-in CAGE CLAMP® ▸ Actuation type : Push-button ▸ 1.5 mm² ▸ Pin spacing: 3.5 mm / 0.138 inches

Color: white

Conductor connection direction to PCB: 90 °



2086-1105/700-650/997-605

Pole number	Tape width	Item No.	PU (SPU)
2	24 mm	**2086-1102/700-650/997-604**	2430 (270)
3	32 mm	**2086-1103/700-650/997-605**	1890 (270)
4	32 mm	**2086-1104/700-650/997-605**	1890 (270)
5	32 mm	**2086-1105/700-650/997-605**	1890 (270)
6	56 mm	**2086-1106/700-650/997-607**	1080 (270)
7	56 mm	**2086-1107/700-650/997-607**	1080 (270)
8	56 mm	**2086-1108/700-650/997-607**	1080 (270)
9	56 mm	**2086-1109/700-650/997-607**	1080 (270)
10	56 mm	**2086-1110/700-650/997-607**	1080 (270)
11	56 mm	**2086-1111/700-650/997-607**	1080 (270)
12	56 mm	**2086-1112/700-650/997-607**	1080 (270)

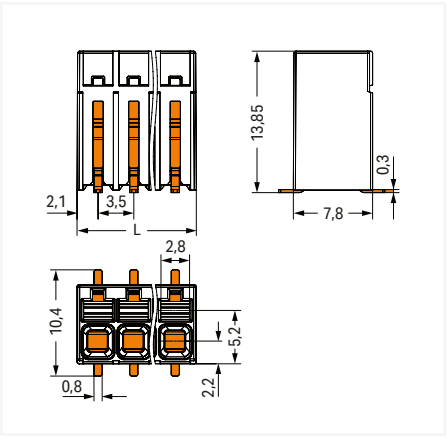

L = (pole no. – 1) x pin spacing + 4.2 mm

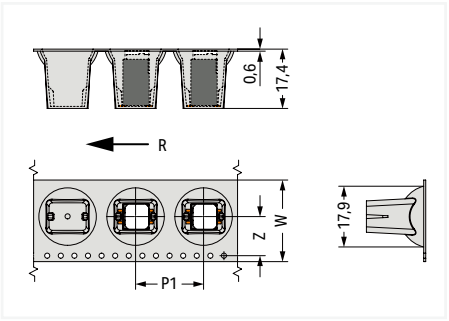

W= Tape width
R = Feed direction
Pole no. 2: Z = 11.5 mm
Pole no. 3 ... 5: Z = 12.4 mm
Pole no. 6 ... 12: Z = 26.2 mm

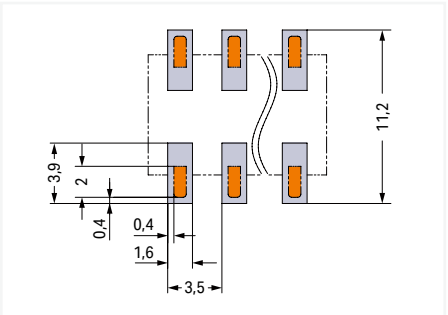

PU = packaging unit; SPU = subpackaging unit; Dimensions in mm

SMD PCB terminal block ▸ 2086 Series

Push-in CAGE CLAMP® ▸ Actuation type : Push-button ▸ 1.5 mm² ▸ Pin spacing: 5 mm / 0.197 inches



- Ideal for compact device connection, panel feedthrough and tight spaces
- Push-in CAGE CLAMP® termination of solid and ferruled fine-stranded conductors
- SMD and THR variants available
- Delivery in tape-and-reel packaging for full integration into SMT soldering process
- Push-button moves in direction of conductor connection
- Conductor connection and mating direction parallel or perpendicular to the PCB

3

Current-Carrying Capacity Curve
Pin spacing: 5 mm / Conductor cross-section: 1.5 mm² "f-st"
Based on: EN 60512-5-2 / Reduction factor: 1

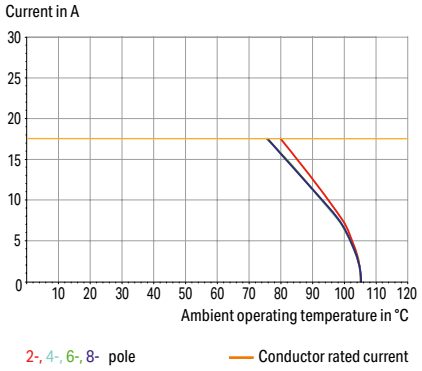

Electrical data			
Ratings per	**IEC/EN 60664-1**		
Overvoltage category	III	III	II
Pollution degree	3	2	2
Nominal voltage	320 V	320 V	630 V
Rated impulse withstand voltage	4 kV	4 kV	4 kV
Rated current	17.5 A	17.5 A	17.5 A
Approvals per	**UL 1059**		
Use group	B	C	D
Rated voltage	300 V	-	300 V
Rated current	14 A	-	10 A
Approvals per	**CSA**		
Use group	B	C	D
Rated voltage	300 V	-	300 V
Rated current	14 A	-	14 A

Connection Data	
Connection technology	Push-in CAGE CLAMP®
Strip length	8 … 9 mm / 0.31 … 0.35 inches
Solid conductor	0.14 … 1.5 mm² / 28 … 16 AWG
Fine-stranded conductor	0.14 … 1.5 mm² / 26 … 14 AWG
Fine-stranded conductor; with insulated ferrule	0.25 … 0.75 mm²
Fine-stranded conductor; with uninsulated ferrule	0.25 … 1.5 mm²

Material data	
Material group	I
Insulation material (main housing)	Polyphthalamide (PPA GF)
Flammability class per UL94	V0
Clamping spring material	Chrome-nickel spring steel (CrNi)
Contact material	Electrolytic copper (E_{Cu})
Contact Plating	Tin

Mechanical data	
Solder pin arrangement	over the entire terminal strip (in-line)
Number of solder pins per potential	2
Reel diameter of tape-and-reel packaging	380 mm

Environmental requirements	
Limit temperature range	-60 … +105 °C
Processing temperature	-35 … +60 °C
Continuous operating temperature	-60 … +105 °C

Ferrule	Page 1081
Test and measurement	Page 1088
Tool	Page 1072
See technical section for further information	
Approvals and corresponding ratings, visit www.wago.com	

SMD PCB terminal block ▸ 2086 Series

Push-in CAGE CLAMP® ▸ Actuation type : Push-button ▸ 1.5 mm² ▸ Pin spacing: 5 mm / 0.197 inches

Color: black

Conductor connection direction to PCB: 0 °

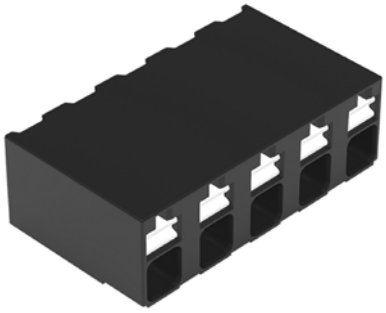

2086-3205/700-000/997-607

Pole number	Tape width	Item No.	PU (SPU)
2	24 mm	**2086-3202/700-000/997-604**	4635 (515)
3	32 mm	**2086-3203/700-000/997-605**	3605 (515)
4	32 mm	**2086-3204/700-000/997-605**	3605 (515)
5	56 mm	**2086-3205/700-000/997-607**	2060 (515)
6	56 mm	**2086-3206/700-000/997-607**	2060 (515)
7	56 mm	**2086-3207/700-000/997-607**	2060 (515)
8	56 mm	**2086-3208/700-000/997-607**	2060 (515)

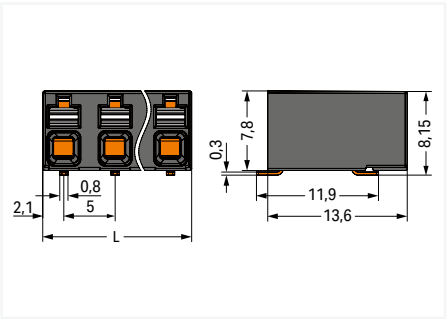

L = (pole no. – 1) x pin spacing + 4.2 mm

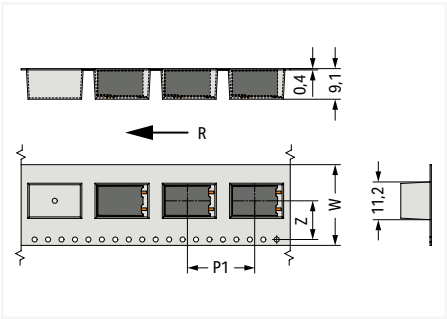

W= Tape width
R = Feed direction
Pole no. 2: Z = 11.5 mm
Pole no. 3: Z = 11.7 mm
Pole no. 4: Z = 14.2 mm
Pole no. 5: Z = 23.7 mm
Pole no. 6: Z = 21.2 mm
Pole no. 7: Z = 23.7 mm
Pole no. 8: Z = 26.2 mm

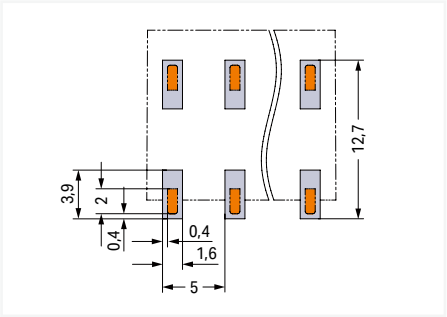

PU = packaging unit; SPU = subpackaging unit; Dimensions in mm

SMD PCB terminal block ▸ 2086 Series

Push-in CAGE CLAMP® ▸ Actuation type : Push-button ▸ 1.5 mm² ▸ Pin spacing: 5 mm / 0.197 inches

Color: black

Conductor connection direction to PCB: 90 °



2086-3105/700-000/997-607

Pole number	Tape width	Item No.	PU (SPU)
2	24 mm	**2086-3102/700-000/997-604**	2430 (270)
3	32 mm	**2086-3103/700-000/997-605**	1890 (270)
4	32 mm	**2086-3104/700-000/997-605**	1890 (270)
5	56 mm	**2086-3105/700-000/997-607**	1080 (270)
6	56 mm	**2086-3106/700-000/997-607**	1080 (270)
7	56 mm	**2086-3107/700-000/997-607**	1080 (270)
8	56 mm	**2086-3108/700-000/997-607**	1080 (270)

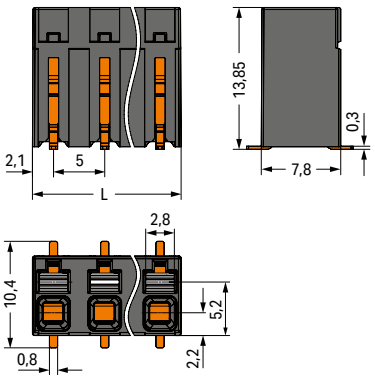

L = (pole no. – 1) x pin spacing + 4.2 mm

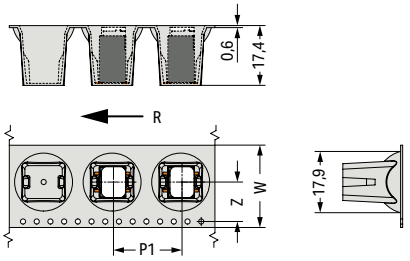

W= Tape width
R = Feed direction
Pole no. 2: Z = 11.5 mm
Pole no. 3; 4: Z = 14.2 mm
Pole no. 5; 6; 7; 8: Z = 26.2 mm

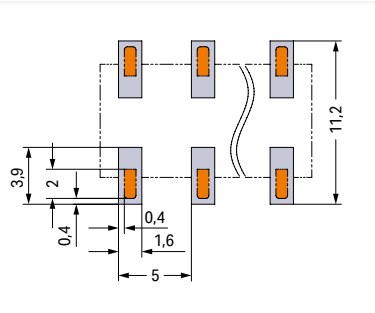

PU = packaging unit; SPU = subpackaging unit; Dimensions in mm

SMD PCB terminal block ▸ 2086 Series

Push-in CAGE CLAMP® ▸ Actuation type : Push-button ▸ 1.5 mm² ▸ Pin spacing: 5 mm / 0.197 inches

Color: white

Conductor connection direction to PCB: 0 °



2086-3205/700-650/997-607

Pole number	Tape width	Item No.	PU (SPU)
2	24 mm	**2086-3202/700-650/997-604**	4635 (515)
3	32 mm	**2086-3203/700-650/997-605**	3605 (515)
4	32 mm	**2086-3204/700-650/997-605**	3605 (515)
5	56 mm	**2086-3205/700-650/997-607**	2060 (515)
6	56 mm	**2086-3206/700-650/997-607**	2060 (515)
7	56 mm	**2086-3207/700-650/997-607**	2060 (515)
8	56 mm	**2086-3208/700-650/997-607**	2060 (515)

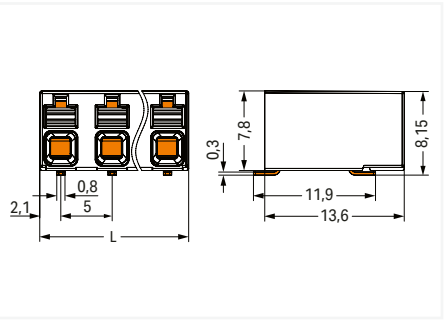

L = (pole no. – 1) x pin spacing + 4.2 mm

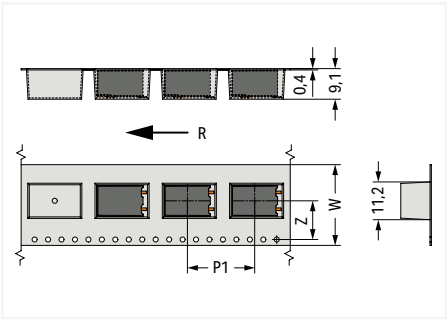

W= Tape width
R = Feed direction
Pole no. 2: Z = 11.5 mm
Pole no. 3: Z = 11.7 mm
Pole no. 4: Z = 14.2 mm
Pole no. 5: Z = 23.7 mm
Pole no. 6: Z = 21.2 mm
Pole no. 7: Z = 23.7 mm
Pole no. 8: Z = 26.2 mm

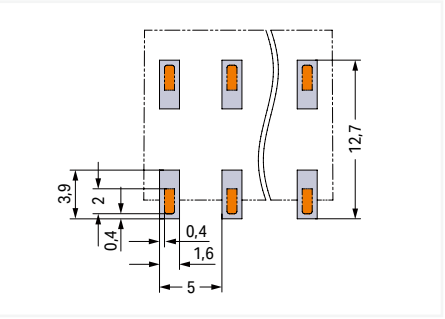

PU = packaging unit; SPU = subpackaging unit; Dimensions in mm

SMD PCB terminal block ▸ 2086 Series

Push-in CAGE CLAMP® ▸ Actuation type : Push-button ▸ 1.5 mm² ▸ Pin spacing: 5 mm / 0.197 inches

Color: white

Conductor connection direction to PCB: 90 °



2086-3105/700-650/997-607

Pole number	Tape width	Item No.	PU (SPU)
2	24 mm	**2086-3102/700-650/997-604**	2430 (270)
3	32 mm	**2086-3103/700-650/997-605**	1890 (270)
4	32 mm	**2086-3104/700-650/997-605**	1890 (270)
5	56 mm	**2086-3105/700-650/997-607**	1080 (270)
6	56 mm	**2086-3106/700-650/997-607**	1080 (270)
7	56 mm	**2086-3107/700-650/997-607**	1080 (270)
8	56 mm	**2086-3108/700-650/997-607**	1080 (270)

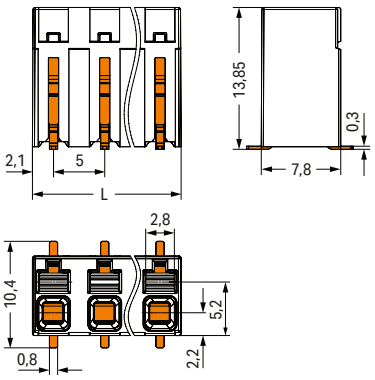

L = (pole no. – 1) x pin spacing + 4.2 mm

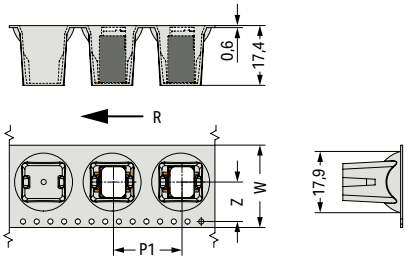

W= Tape width
R = Feed direction
Pole no. 2: Z = 11.5 mm
Pole no. 3; 4: Z = 14.2 mm
Pole no. 5; 6; 7; 8: Z = 26.2 mm

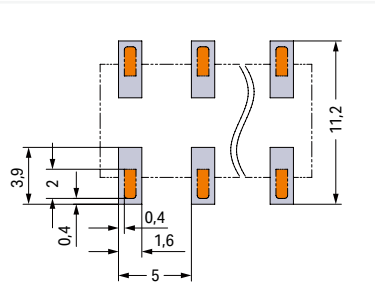

PU = packaging unit; SPU = subpackaging unit; Dimensions in mm

Operating tool ▸ Suitable for 2059 Series

insulated



2059-189

	Item No.	PU (SPU)
	2059-189	600 (50)

metal; partially insulated



206-859

	Item No.	PU
	206-859	5



Insert/remove solid conductors by lightly pressing on push-button.

PU = packaging unit; SPU = subpackaging unit

Operating tool ▸ Suitable for 2060 Series

insulated



2060-189

Item No.	PU (SPU)
2060-189	300 (50)

metal; partially insulated



206-860

Item No.	PU
206-860	5



Inserting/removing fine-stranded conductors by lightly pressing on a push-button.

PU = packaging unit; SPU = subpackaging unit

Operating tool ▸ Suitable for 2061 Series



2061-189

	Item No.	PU (SPU)
	2061-190	300 (50)

PU = packaging unit; SPU = subpackaging unit

Operating tool ▸ Suitable for 2065 Series ▸ insulated



2065-189

Item No.	PU (SPU)
2065-189	600 (50)

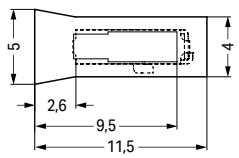

Required space for operating tool

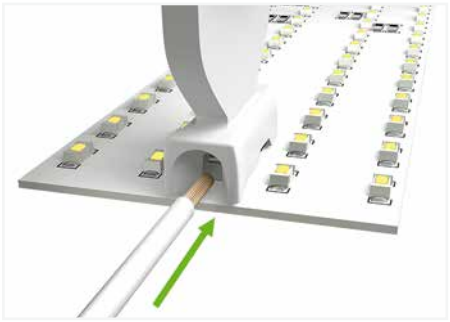

The 2065-189 Operating Tool's funneled conductor entry securely guides all conductor types into the Push-in CAGE CLAMP®.

3

PU = packaging unit; SPU = subpackaging unit; Dimensions in mm

Operating tool ▸ Suitable for 2070 Series ▸ metal; partially insulated



2070-400

Item No.	PU
2070-400	1

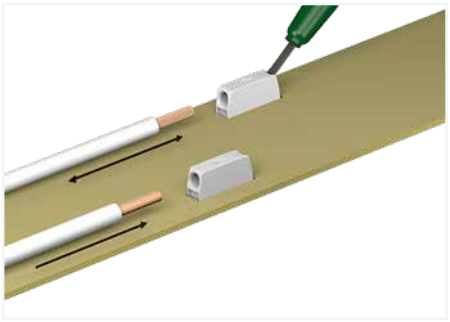

Insert fine-stranded conductors and remove all conductor types via operating tool. Solid conductors can also be terminated by simply pushing them in.

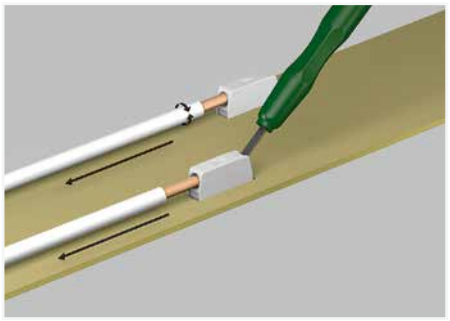

Use an operating tool or simply "twist and pull" to remove solid conductors.

PU = packaging unit; SPU = subpackaging unit

Board-to-board link ▸ 2059 ▸ Pin spacing : 3 mm / 0.118 inches



- Board-to-board links simplify LED module assembly
- Easy push-in connection and disconnection

3

Electrical data				
Ratings per	**IEC/EN 60664-1**			
Overvoltage category	III	III	II	
Pollution degree	3	2	2	
Nominal voltage	63 V	160 V	320 V	
Rated impulse withstand voltage	2.5 kV	2.5 kV	2.5 kV	
Rated current	3 A	3 A	3 A	

Material data	
Material group	I
Insulation material (main housing)	Polyamide (PA66)
Flammability class per UL94	V0
Contact material	Copper alloy
Contact Plating	Silver

Mechanical data	
Mating cycles (max.)	10
Number of mating cycles	10 connections/disconnections (max.)

Environmental requirements	
Limit temperature range	-60 … +105 °C

See technical section for further information

Approvals and corresponding ratings, visit www.wago.com

Board-to-board link ▸ 2059 ▸ Pin spacing : 3 mm / 0.118 inches

Depth 15.3 mm



2059-901

Pole number	Item No.	PU
1	**2059-901**	1500
2	**2059-902**	500
3	**2059-903**	375

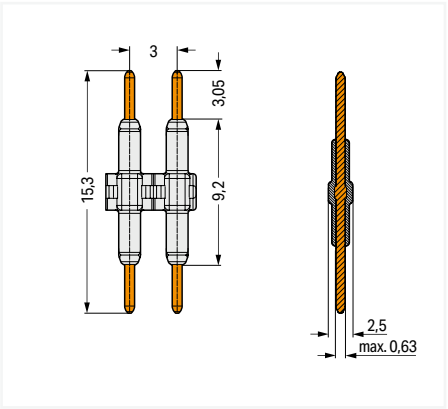

Depth 17.5 mm



2059-901/018-000

Pole number	Item No.	PU
1	**2059-901/018-000**	1500
2	**2059-902/018-000**	500
3	**2059-903/018-000**	375

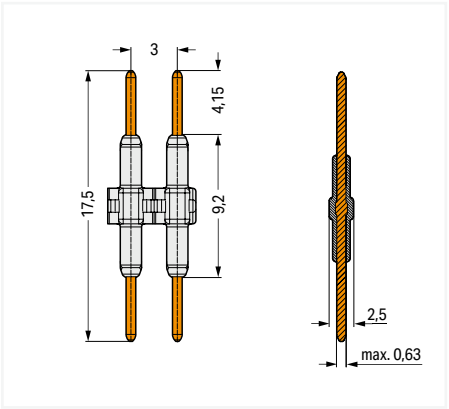

Depth 20.5 mm

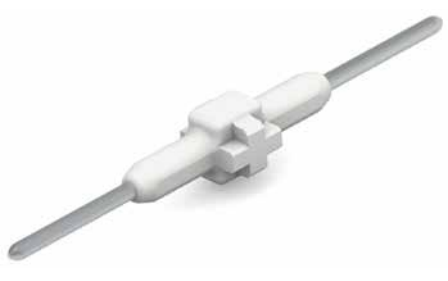

2059-901/021-000

Pole number	Item No.	PU
1	**2059-901/021-000**	1500
2	**2059-902/021-000**	500
3	**2059-903/021-000**	375

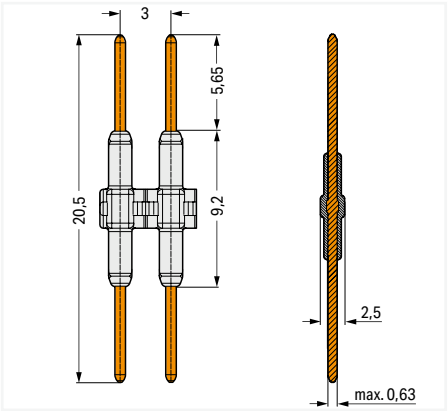

PU = packaging unit; SPU = subpackaging unit; Dimensions in mm

Board-to-board link ▸ 2059 ▸ Pin spacing : 3 mm / 0.118 inches



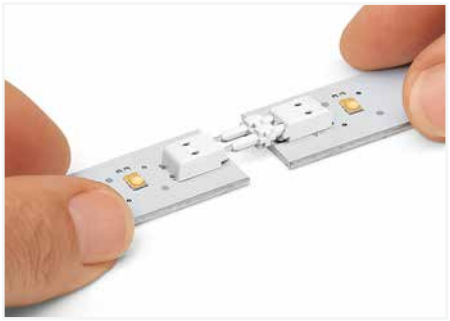

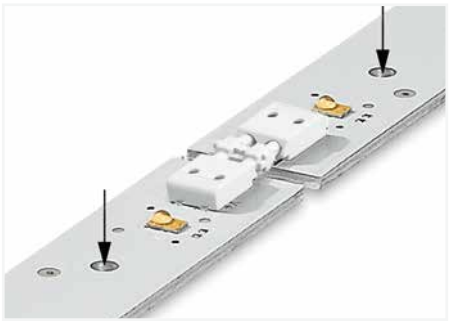

Board-to-Board Link ▸ 2060 Series

Board-to-board link ▸ 2060 ▸ Depth 28 mm



- Board-to-board links simplify LED module assembly
- Easy push-in connection and disconnection

3

Electrical data						
Pin spacing	**4 mm / 0.157 inches**			**8 mm / 0.314 inches**		
Ratings per	**IEC/EN 60664-1**			**IEC/EN 60664-1**		
Overvoltage category	III	III	II	III	III	II
Pollution degree	3	2	2	3	2	2
Nominal voltage	63 V	160 V	320 V	400 V	630 V	1000 V
Rated impulse withstand voltage	2.5 kV	2.5 kV	2.5 kV	6 kV	6 kV	6 kV
Rated current	9 A	9 A	9 A	9 A	9 A	9 A
Ratings						
Approvals per	UL 1977			UL 1977		
Rated voltage	250 V			600 V		
Rated current	9 A			9 A		
Material data						
Material group	I					
Insulation material (main housing)	Polyamide (PA66)					
Flammability class per UL94	V0					
Contact material	Copper alloy					
Contact Plating	Silver					
Mechanical data						
Mating cycles (max.)	10					
Number of mating cycles	10 connections/disconnections (max.)					
Environmental requirements						
Limit temperature range	-60 … +105 °C					

Note:
Notice: Only suitable for 2060-45x, not for 2060-40x.

See technical section for further information

Approvals and corresponding ratings, visit www.wago.com

Board-to-Board Link ▸ 2060 Series

Board-to-board link ▸ 2060 ▸ Depth 28 mm

Pin spacing : 4 mm / 0.157 inches

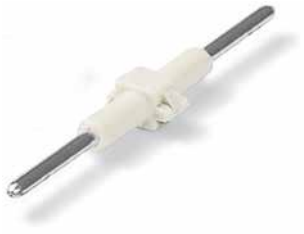

2060-951

Pole number	Item No.	PU
1	**2060-951/028-000**	1500
2	**2060-952/028-000**	500
3	**2060-953/028-000**	375

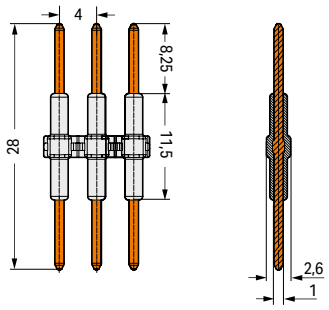

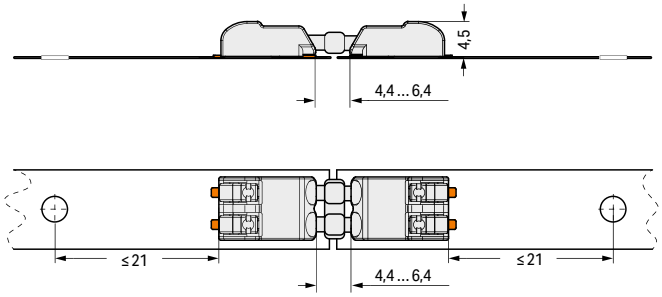

PU = packaging unit; SPU = subpackaging unit; Dimensions in mm

Board-to-Board Link ▸ 2060 Series

Board-to-board link ▸ 2060 ▸ Depth 28 mm

Pin spacing : 8 mm / 0.314 inches

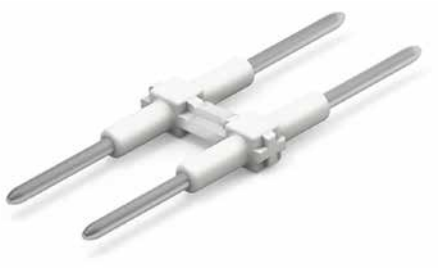

2060-962/028-000

Pole number	Item No.	PU
2	2060-962/028-000	375

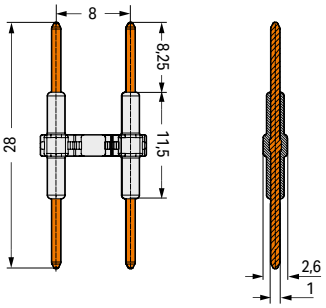

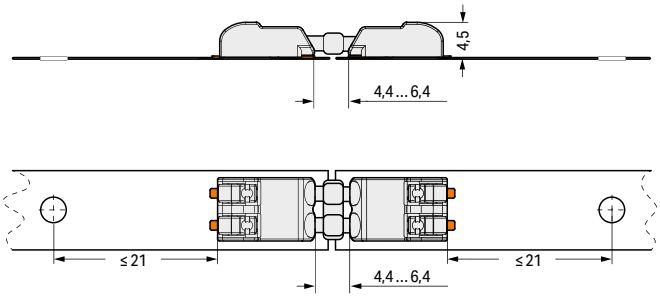



Inserting a board-to-board link into the terminal block.

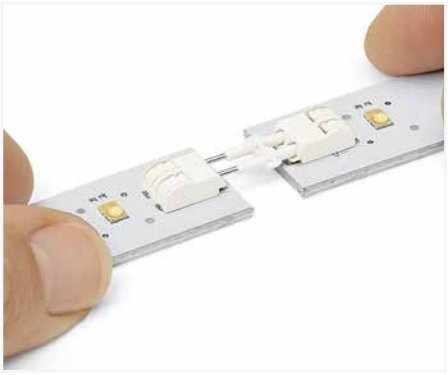

Assembly: Place PCBs on a flat surface and connect terminal blocks on adjoining PCBs via board-to-board link.
Disassembly: Pull PCBs apart (max. 10 mating cycles).

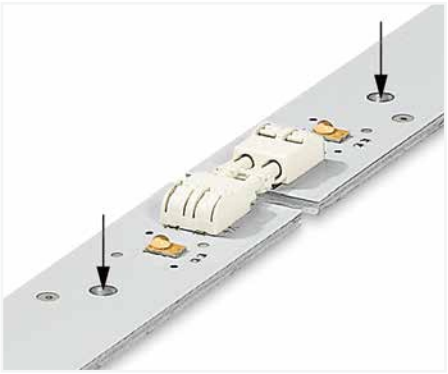

The PCBs must be secured.

PU = packaging unit; SPU = subpackaging unit; Dimensions in mm

Board-to-board link ▸ 2061 ▸ Pin spacing : 6 mm / 0.236 inches

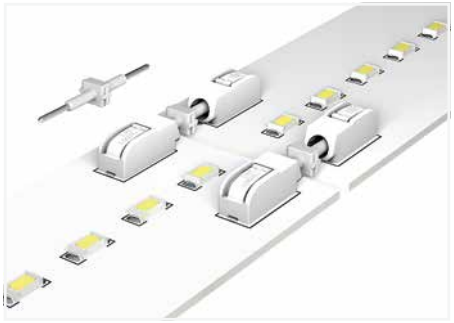

- Board-to-board links simplify in-line assembly of LED modules
- Easy push-in connection and disconnection without push-button actuation

3

Electrical data				
Ratings per	**IEC/EN 60664-1**			
Overvoltage category	III	III	II	
Pollution degree	3	2	2	
Nominal voltage	250 V	320 V	630 V	
Rated impulse withstand voltage	4 kV	4 kV	4 kV	
Rated current	9 A	9 A	9 A	

Material data	
Material group	I
Insulation material (main housing)	Polyamide (PA66)
Flammability class per UL94	V0
Contact material	Copper alloy
Contact Plating	Silver

Mechanical data	
Mating cycles (max.)	10
Number of mating cycles	10 connections/disconnections (max.)

Environmental requirements	
Limit temperature range	-60 … +105 °C

See technical section for further information

Approvals and corresponding ratings, visit www.wago.com

Board-to-board link ▸ 2061 ▸ Pin spacing : 6 mm / 0.236 inches

Depth 30 mm

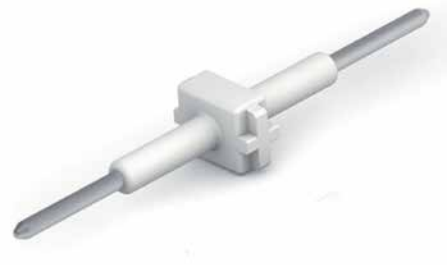

2061-901

Pole number	Item No.	PU
1	**2061-901**	700
2	**2061-902**	300
3	**2061-903**	200

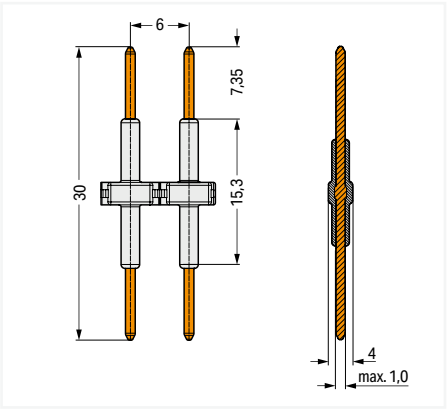

Depth 34 mm



2061-901/034-000

Pole number	Item No.	PU
1	**2061-901/034-000**	700
2	**2061-902/034-000**	300

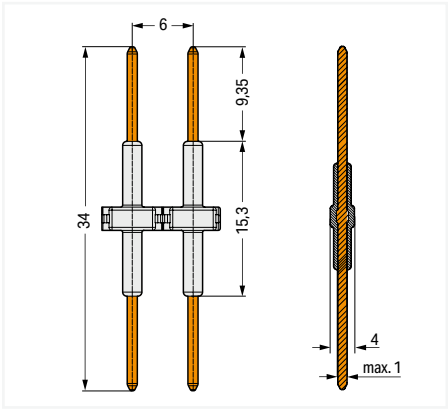

Depth 43 mm

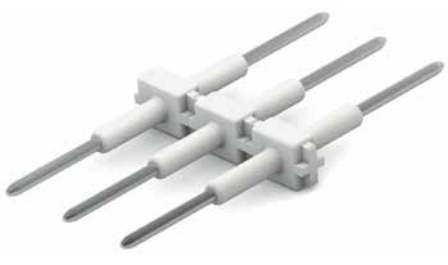

2061-903/034-000

Pole number	Item No.	PU
3	**2061-903/034-000**	200

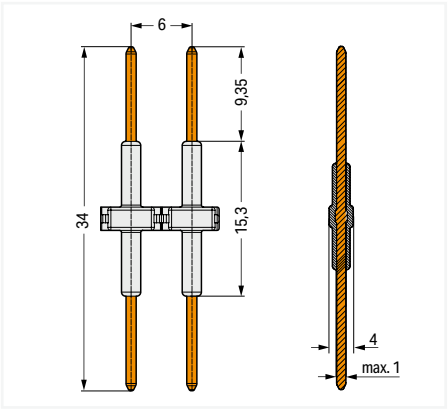

PU = packaging unit; SPU = subpackaging unit; Dimensions in mm

Board-to-board link ▸ 2061 ▸ Pin spacing : 6 mm / 0.236 inches



Inserting a board-to-board link into the terminal block.

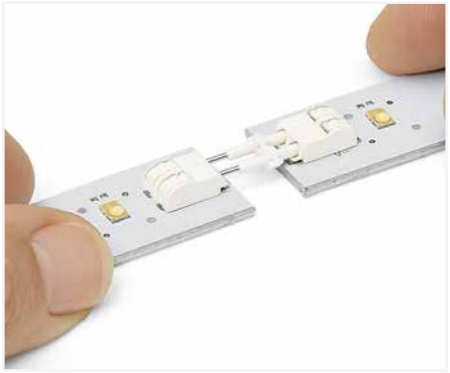

Assembly: Place PCBs on a flat surface and connect terminal blocks on adjoining PCBs via board-to-board link.
Disassembly: Pull PCBs apart (max. 10 mating cycles).

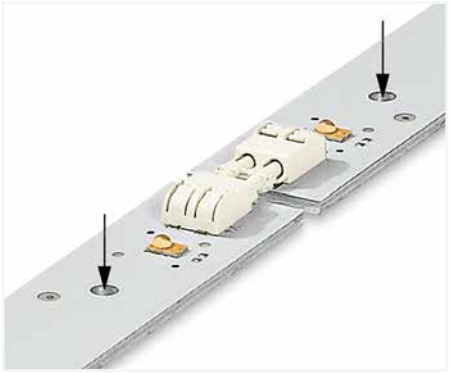

The PCBs must be secured.

Board-to-board link ▸ 2065



- Board-to-board links simplify in-line assembly of LED modules
- Space saving connection of PCBs

Electrical data				
Ratings per	**IEC/EN 60664-1**			
Overvoltage category	III	III	II	
Pollution degree	3	2	2	
Nominal voltage	250 V	320 V	630 V	
Rated impulse withstand voltage	4 kV	4 kV	4 kV	
Rated current	9 A	9 A	9 A	
Material data				
Contact material	Copper alloy			
Contact Plating	Silver			
Mechanical data				
Mating cycles (max.)	10			
Number of mating cycles	10 connections/disconnections (max.)			
Environmental requirements				
Limit temperature range	-60 … +120 °C			

Note:
The layout must meet the requirements of the insulation coordination standard EN/IEC 60664-1 and applicable end product standards. When using board-to-board links, please note the potentially reduced clearances (e.g., with metal core boards).
Notice: Terminal block without insulation housing! Protection against accidental contact must be provided at voltages higher than low voltages (e.g., SELV/PELV) for the relevant application.

See technical section for further information

Approvals and corresponding ratings, visit www.wago.com

Board-to-board link ▸ 2065

Depth 15.6 mm



2065-131

	Item No.	PU
	2065-131	1500

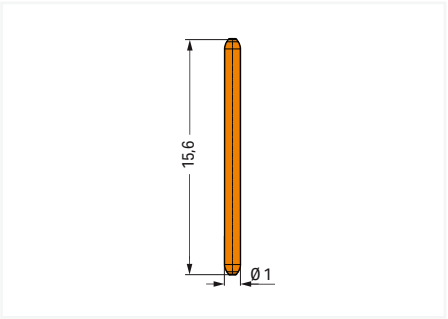

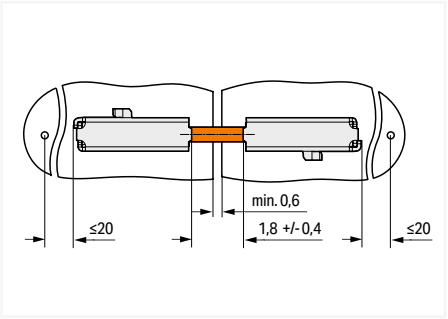

Depth 17.6 mm



2065-133

	Item No.	PU
	2065-133	1500

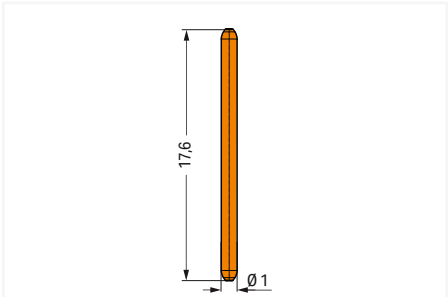

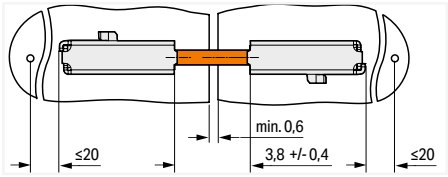

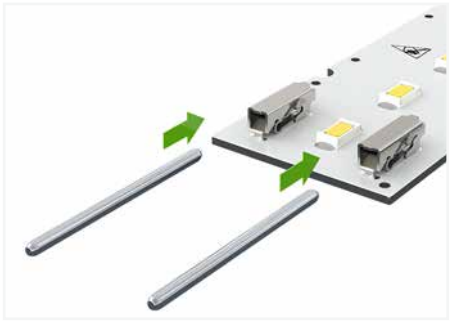

Insert the board-to-board links into the terminal blocks.

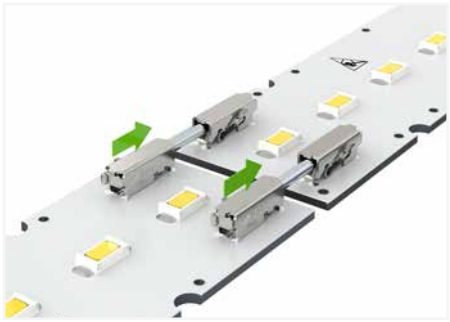

Assembly: Place PCBs on a flat surface and insert links into terminal blocks on adjoining PCBs. Disassembly: Open the terminal blocks with an operating tool. (max. 5 connections/ disconnections)



The PCBs must be secured.

PU = packaging unit; SPU = subpackaging unit; Dimensions in mm

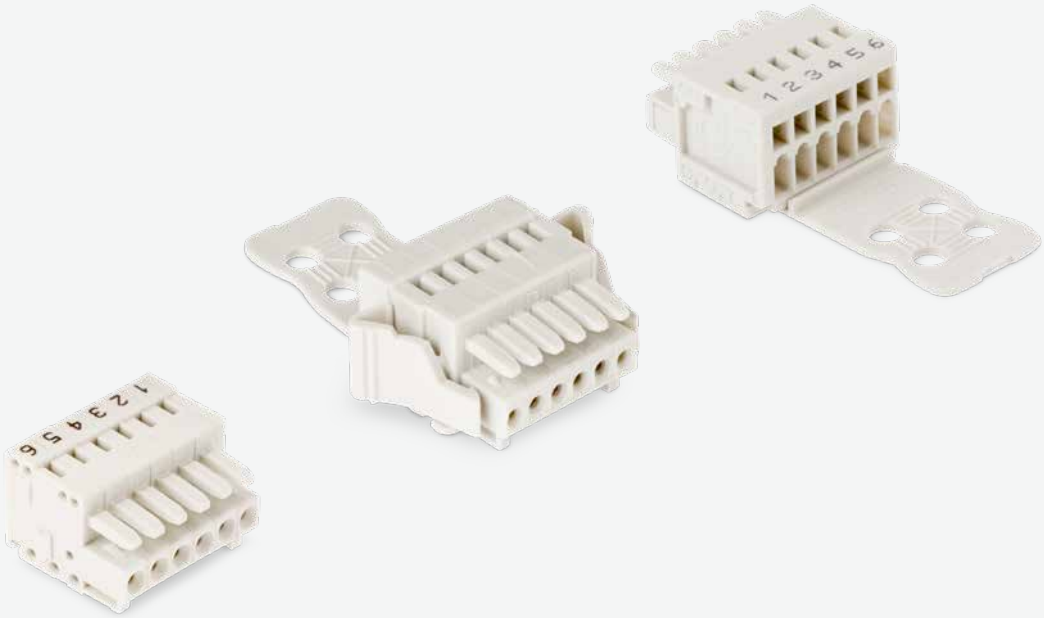

WAGO *MULTI CONNECTION SYSTEM* MICRO

WAGO *MULTI CONNECTION SYSTEM* MICRO

Pin Spacing: 2.5 mm / Nominal Cross-Section: 0.5 mm²

		Page
	*MCS* MICRO 1-Conductor Female Connectors ▸ Actuation type: Operating tool ▸ CAGE CLAMP®	416
	*MCS* MICRO 1-Conductor Male Connectors ▸ Actuation type: Operating tool ▸ CAGE CLAMP®	418
	*MCS* MICRO THT Male Headers	420
	THR Male Headers	424
	*MCS* MICRO Accessories	428
	Accessories and Tools	1063

4

CAGE CLAMP®

MCS **MICRO**

Description and Installation



Male headers and female connectors are 100 % protected against mismating.
Only mating halves with the same pole number can be connected.

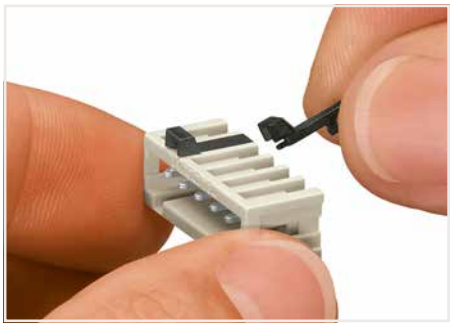

Coding a male header – fitting coding key(s).

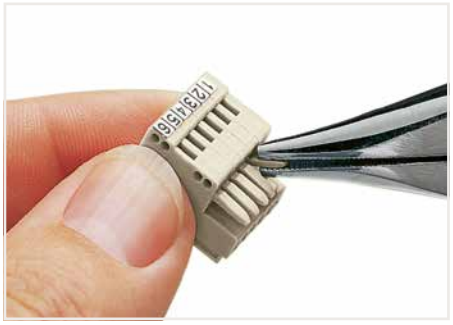

Coding a female connector – removing coding finger(s).



Wire-to-wire connection of single conductors

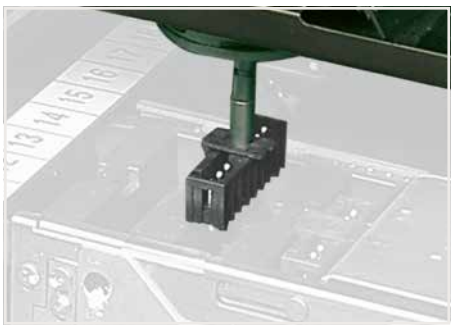

THR male headers for reflow soldering in SMT applications

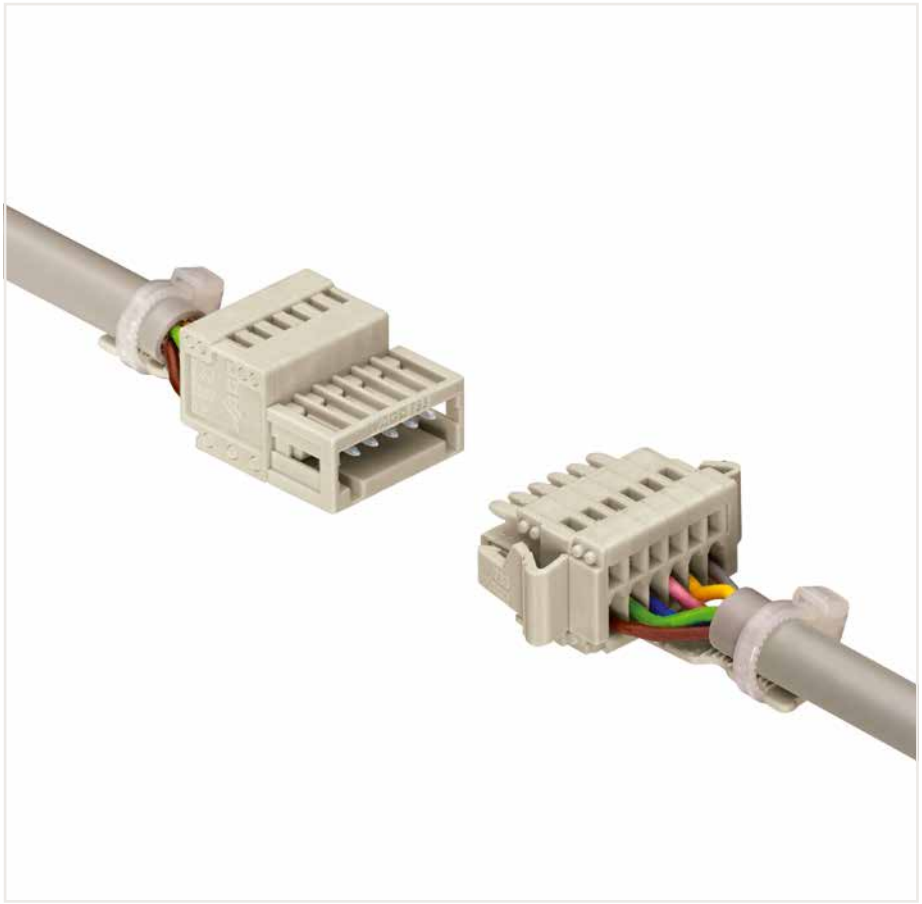

Wire-to-wire connection of multi-core cables
Plug-in connection using strain relief plates and locking levers



Tape-and-reel packaging for THR male headers



Locking levers prevent accidental disconnection.

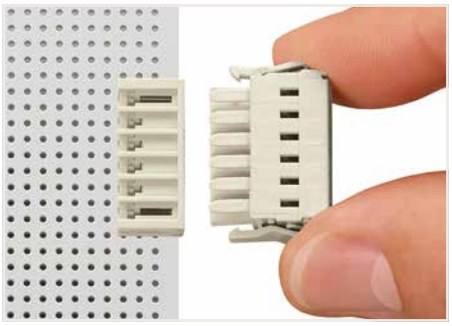

Locking levers prevent accidental disconnection.

CAGE CLAMP®

MCS **MICRO**

Description and Installation

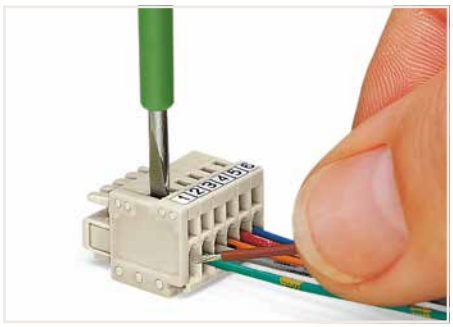

Inserting a conductor via (2.5 x 0.4) mm screwdriver.
Operation is performed perpendicular to conductor entry.

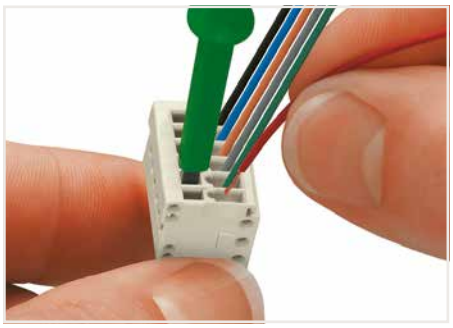

Inserting a conductor via screwdriver (233-335) –
CAGE CLAMP® actuation parallel to conductor entry.

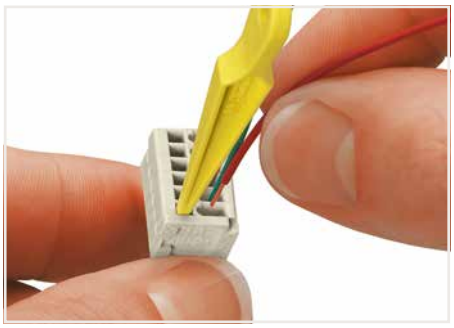

Inserting a conductor via 233-331 Operating Tool.
Operation is performed parallel to conductor entry.

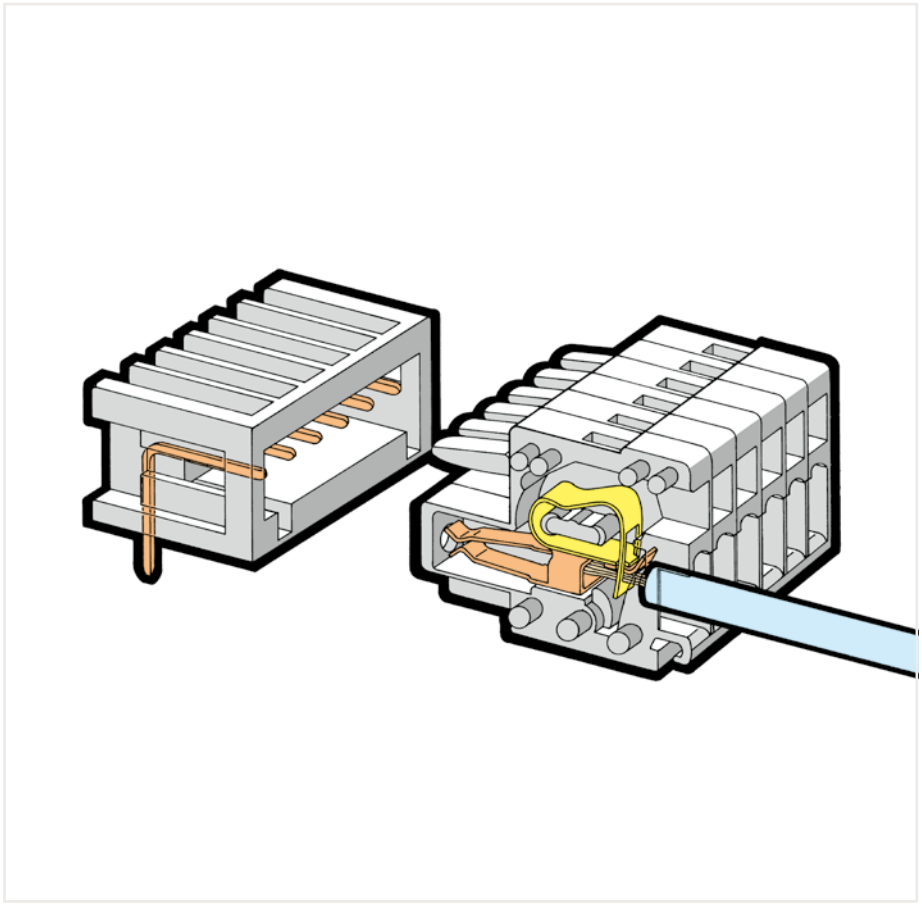

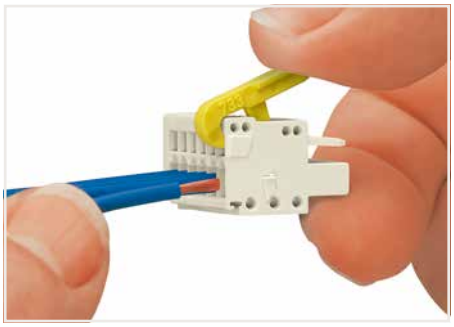

Marking via self-adhesive strips or factory direct marking

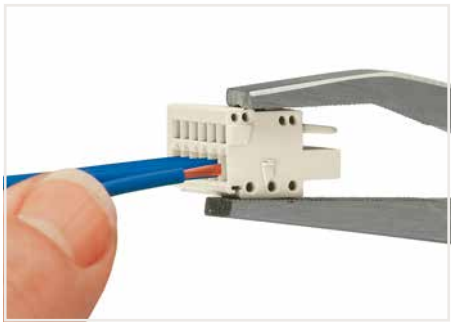

Inserting a conductor via 210-251 Operating Tool.



Marking via self-adhesive strips or factory direct marking

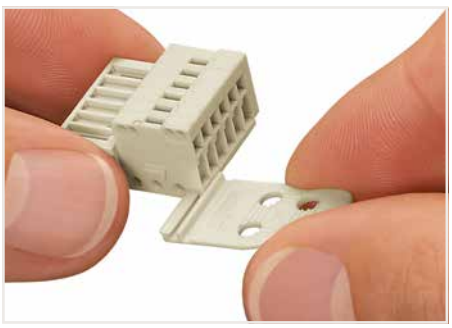

Strain relief plates for factory or in-the-field assembly.



Testing via 1 mm Ø test pin (735-500) – touch contact.

1-conductor female connector ▸ *MCS* MICRO ▸ 733 Series

Pin spacing: 2.5 mm / 0.098 inches ▸ Actuation type: Operating tool ▸ CAGE CLAMP® ▸ Color: light gray

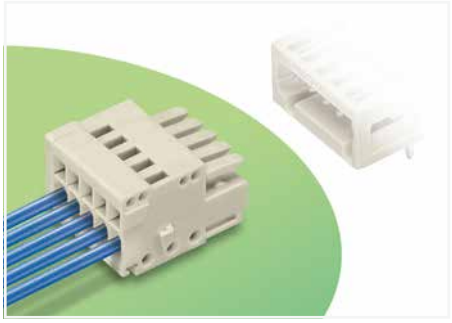

- Universal connection for all conductor types
- Easy cable pre-assembly and on-unit wiring via vertical and horizontal CAGE CLAMP® actuation
- Strain relief plates for factory and field assembly
- 100% protected against mismating
- Coding option available

4

Derating Curve
1-conductor female connector (733-102) with THT male header (733-332)
Pin spacing: 2.5 mm / Conductor cross-section: 0.5 mm² "f-st"
Based on: EN 60512-5-2 / Reduction factor: 0.8

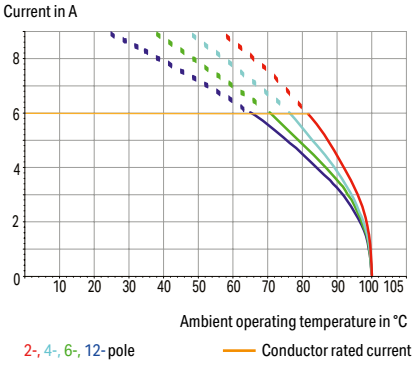

Electrical data			
Ratings per	**IEC/EN 60664-1**		
Overvoltage category	III	III	II
Pollution degree	3	2	2
Nominal voltage	100 V	160 V	320 V
Rated impulse withstand voltage	2.5 kV	2.5 kV	2.5 kV
Rated current	6 A	6 A	6 A
Approvals per	**UL 1059**		
Use group	B	C	D
Rated voltage	150 V	-	-
Rated current	4 A	-	-
Approvals per	**CSA**		
Use group	B	C	D
Rated voltage	150 V	-	-
Rated current	4 A	-	-

Connection Data	
Connection technology	CAGE CLAMP®
Strip length	5 … 6 mm / 0.2 … 0.24 inches
Solid conductor	0.08 … 0.5 mm² / 28 … 20 AWG
Fine-stranded conductor	0.08 … 0.5 mm² / 28 … 20 AWG
Fine-stranded conductor; with insulated ferrule	0.25 … 0.34 mm²
Fine-stranded conductor; with uninsulated ferrule	0.25 … 0.34 mm²

Material data	
Material group	I
Insulation material (main housing)	Polyamide (PA66)
Flammability class per UL94	V0
Clamping spring material	Chrome-nickel spring steel (CrNi)
Contact material	Copper alloy
Contact Plating	Tin

Environmental requirements	
Limit temperature range	-60 … +100 °C
Processing temperature	-35 … +60 °C

Note:
The *MCS – MULTI CONNECTION SYSTEM* includes connectors without breaking capacity in accordance with DIN EN 61984. When used as intended, these connectors must not be connected/disconnected when live or under load.When used as intended, these connectors must not be connected/disconnected when live or under load. The circuit design should ensure header pins, which can be touched, are not live when unmated.

Ferrule	Page 1081
Marking	Page 1066
Strain relief	Page 433
Test and measurement	Page 1088
Tool	Page 430, 1072
Direct marking	Page 428
See technical section for further information	
Approvals and corresponding ratings, visit www.wago.com	

1-conductor female connector ▸ *MCS* MICRO ▸ 733 Series

Pin spacing: 2.5 mm / 0.098 inches ▸ Actuation type: Operating tool ▸ CAGE CLAMP® ▸ Color: light gray

	Locking of plug-in connection: Locking lever





733-106

Pole number	Item No.	PU
2	733-102	200
3	733-103	200
4	733-104	200
5	733-105	100
6	733-106	100
7	733-107	100
8	733-108	100
9	733-109	100
10	733-110	100
12	733-112	50

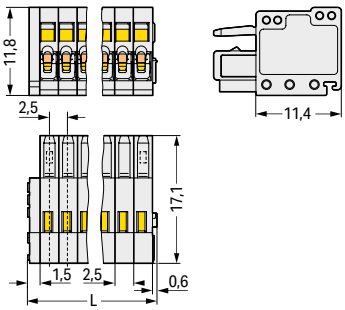

L = (pole no. x pin spacing) + 2.1 mm

733-106/037-000

Pole number	Item No.	PU
2	733-102/037-000	100
3	733-103/037-000	100
4	733-104/037-000	100
5	733-105/037-000	100
6	733-106/037-000	100
7	733-107/037-000	50
8	733-108/037-000	50
9	733-109/037-000	50
10	733-110/037-000	50
12	733-112/037-000	50

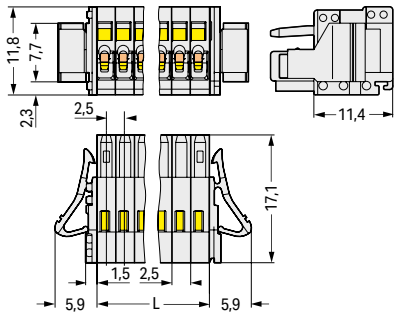

L = pole no. x pin spacing

PU = packaging unit; SPU = subpackaging unit; Dimensions in mm

Variants:
- Other pole numbers
- Gold-plated or partially gold-plated contact surfaces
- Other versions (or variants) can be requested from WAGO Sales or configured at https://configurator.wago.com/.

1-conductor male connector ▸ *MCS* MICRO ▸ 733 Series

Pin spacing: 2.5 mm / 0.098 inches ▸ Actuation type: Operating tool ▸ CAGE CLAMP® ▸ Color: light gray

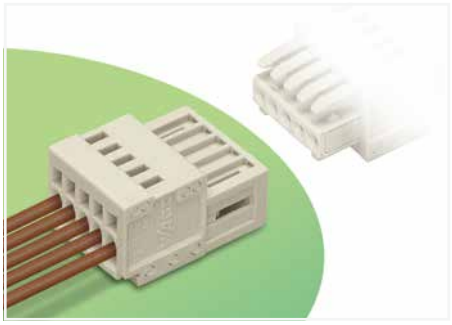

- Universal connection for all conductor types
- Easy cable pre-assembly and on-unit wiring via vertical and horizontal CAGE CLAMP® actuation
- For wire-to-wire connections
- 100% protected against mismating
- Coding option available

4

Derating Curve
1-conductor female connector (733-102) with
THT male header (733-202)
Pin spacing: 2.5 mm / Conductor cross-section: 0.5 mm² "f-st"
Based on: EN 60512-5-2 / Reduction factor: 0.8

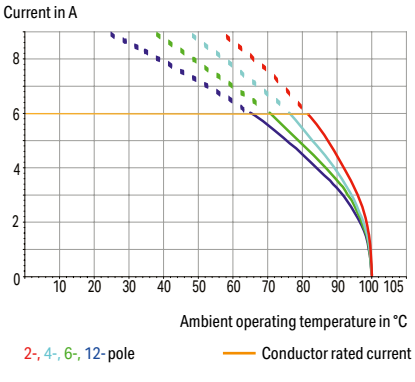

Electrical data			
Ratings per	**IEC/EN 60664-1**		
Overvoltage category	III	III	II
Pollution degree	3	2	2
Nominal voltage	100 V	160 V	320 V
Rated impulse withstand voltage	2.5 kV	2.5 kV	2.5 kV
Rated current	6 A	6 A	6 A
Approvals per	**UL 1059**		
Use group	B	C	D
Rated voltage	150 V	-	-
Rated current	4 A	-	-
Approvals per	**CSA**		
Use group	B	C	D
Rated voltage	150 V	-	-
Rated current	4 A	-	-

Connection Data	
Connection technology	CAGE CLAMP®
Strip length	5 … 6 mm / 0.2 … 0.24 inches
Solid conductor	0.08 … 0.5 mm² / 28 … 20 AWG
Fine-stranded conductor	0.08 … 0.5 mm² / 28 … 20 AWG
Fine-stranded conductor; with insulated ferrule	0.25 … 0.34 mm²
Fine-stranded conductor; with uninsulated ferrule	0.25 … 0.34 mm²

Material data	
Material group	I
Insulation material (main housing)	Polyamide (PA66)
Flammability class per UL94	V0
Clamping spring material	Chrome-nickel spring steel (CrNi)
Contact material	Electrolytic copper (E_{Cu})
Contact Plating	Tin

Environmental requirements	
Limit temperature range	-60 … +100 °C
Processing temperature	-35 … +60 °C

Note:
The *MCS – MULTI CONNECTION SYSTEM* includes connectors without breaking capacity in accordance with DIN EN 61984. When used as intended, these connectors must not be connected/disconnected when live or under load.When used as intended, these connectors must not be connected/disconnected when live or under load. The circuit design should ensure header pins, which can be touched, are not live when unmated.

Coding	Page 432
Ferrule	Page 1081
Strain relief	Page 433
Test and measurement	Page 1088
Tool	Page 430, 431
Direct marking	Page 428
See technical section for further information	
Approvals and corresponding ratings, visit www.wago.com	

1-conductor male connector ▸ *MCS* MICRO ▸ 733 Series

Pin spacing: 2.5 mm / 0.098 inches ▸ Actuation type: Operating tool ▸ CAGE CLAMP® ▸ Color: light gray



733-206

Pole number	Item No.	PU
2	733-202	200
3	733-203	200
4	733-204	200
5	733-205	100
6	733-206	100
7	733-207	100
8	733-208	100
9	733-209	100
10	733-210	100
12	733-212	50

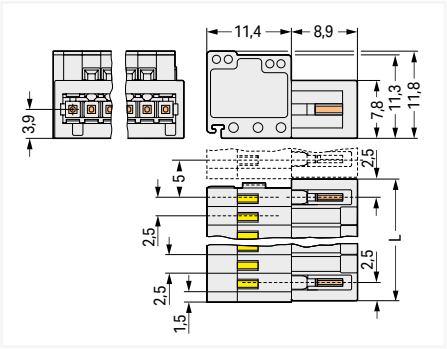

L = (Pole no. + 1) x Pin spacing

PU = packaging unit; SPU = subpackaging unit; Dimensions in mm

Variants:
- Other pole numbers
- Gold-plated or partially gold-plated contact surfaces
- Other versions (or variants) can be requested from WAGO Sales or configured at https://configurator.wago.com/.

THT male header ▸ *MCS* MICRO ▸ 733 Series

Pin spacing: 2.5 mm / 0.098 inches ▸ Color: light gray

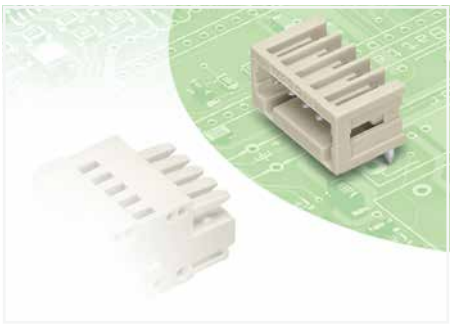

- 100% protected against mismating; only mating halves with the same pole number can be connected
- Coding option available

4

Derating Curve
1-conductor female connector (733-102) with
THT male header (733-362)
Pin spacing: 2.5 mm / Conductor cross-section: 0.5 mm² "f-st"
Based on: EN 60512-5-2 / Reduction factor: 0.8

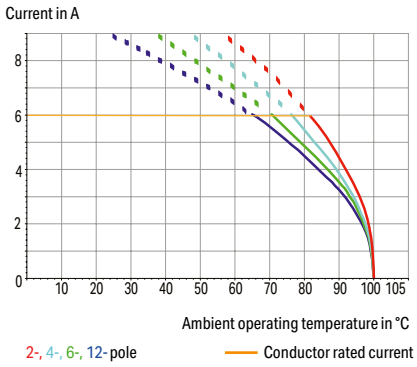

Electrical data			
Ratings per	**IEC/EN 60664-1**		
Overvoltage category	III	III	II
Pollution degree	3	2	2
Nominal voltage	80 V	160 V	320 V
Rated impulse withstand voltage	2.5 kV	2.5 kV	2.5 kV
Rated current	6 A	6 A	6 A
Approvals per	**UL 1059**		
Use group	B	C	D
Rated voltage	150 V	-	-
Rated current	4 A	-	-
Approvals per	**CSA**		
Use group	B	C	D
Rated voltage	150 V	-	-
Rated current	4 A	-	-

Material data	
Material group	I
Insulation material (main housing)	Polyamide (PA66)
Flammability class per UL94	V0
Contact material	Electrolytic copper (E_{Cu})
Contact Plating	Tin

Mechanical data	
Solder pin arrangement	over the entire male connector (in-line)
Number of solder pins per potential	1
Solder pin dimensions	0.8 x 0.8 mm
Drilled hole diameter	1.1 $^{(+0.1)}$ mm

Environmental requirements	
Limit temperature range	-60 … +100 °C
Processing temperature	-35 … +60 °C

Note:
The *MCS – MULTI CONNECTION SYSTEM* includes connectors without breaking capacity in accordance with DIN EN 61984. When used as intended, these connectors must not be connected/disconnected when live or under load.When used as intended, these connectors must not be connected/disconnected when live or under load. The circuit design should ensure header pins, which can be touched, are not live when unmated.

Coding Page 432

See technical section for further information

Approvals and corresponding ratings, visit www.wago.com

THT male header ▸ *MCS* MICRO ▸ 733 Series

Pin spacing: 2.5 mm / 0.098 inches ▸ Color: light gray

Mating direction to the PCB: 0 ° ▸ Solder pin length: 3.7 mm



733-366

Pole number	Item No.	PU
2	733-362	200
3	733-363	200
4	733-364	200
5	733-365	200
6	733-366	200
7	733-367	200
8	733-368	200
9	733-369	200
10	733-370	200
12	733-372	100

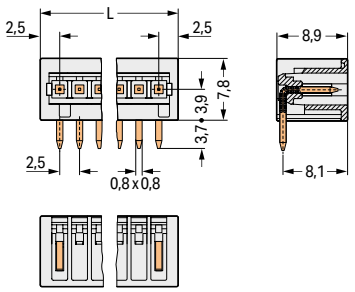

L = (pole no. + 1) x pin spacing

Mating direction to the PCB: 90 ° ▸ Solder pin length: 4.6 mm



733-336

Pole number	Item No.	PU
2	733-332	200
3	733-333	200
4	733-334	200
5	733-335	200
6	733-336	200
7	733-337	200
8	733-338	200
9	733-339	200
10	733-340	200
12	733-342	100

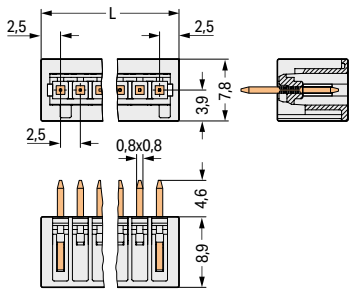

L = (pole no. + 1) x pin spacing

PU = packaging unit; SPU = subpackaging unit; Dimensions in mm

Variants:
- Other pole numbers
- 3.8 mm pin projection for male headers with straight solder pins
- Gold-plated or partially gold-plated contact surfaces
- Other versions (or variants) can be requested from WAGO Sales or configured at https://configurator.wago.com/.

THR (Through-Hole Reflow) Soldering Process



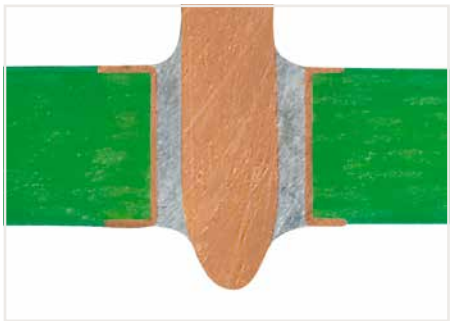



By using high-temperature-resistant plastic and a streamlined pin design, WAGO's THR male headers and PCB terminal blocks meet requirements for SMT process capability while maintaining the necessary stability. Both headers and terminal blocks are simply pushed into the solder paste-filled PCB holes and then soldered along with the SMT components via reflow soldering. The previous wave soldering process is no longer necessary. The result is a perfect connection – both mechanically and electrically.

Terminal strips with an additional suction pad in tape-and-reel packaging per IEC 60286-3
WAGO recommends both a temperature profile that adheres to EN 61760-1 and the use of forced convection ovens for processing THR components.

4

1

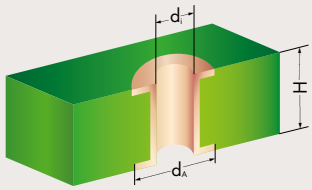

Metal-plated PCB bore hole

Series	d_i (mm)	d_A (mm)	H (mm)	d_s (mm)	D_s (µm)	d (mm)	L (mm)
218	$1.1^{+0.1}$	1.9	< 2	1.8	150	0.9	2.8
231 (1 x 1 mm)	$1.4^{+0.1}$	2.5	< 2	2.4	150	1.2	2.4
231 (1.2 x 1.2 mm)	$1.7^{+0.1}$	2.8	< 2	2.7	150	1.5	2.4
236	$1.1^{+0.1}$	2.2	< 2	2.1	150	0.9	3.6
250	$1.1^{+0.1}$	2.0	< 2	1.9	150	0.9	2.4
713	$1.0^{+0.1}$	1.9	< 2	1.8	150	1.0	2.4
733	$1.2^{+0.1}$	1.9	< 2	1.8	150	1.0	2.4
734	$1.4^{+0.1}$	2.5	< 2	2.4	150	1.2	2.4
2060	$1.5^{+0.1}$	2.4	< 2	2.3	150	1.25	2.4
2061	$1.5^{+0.1}$	2.4	< 2	2.3	150	1.25	1.5 / 2.4
2086	$1.0^{+0.1}$	2.0	< 2	1.9	150	0.85	1.5 / 2.4

2

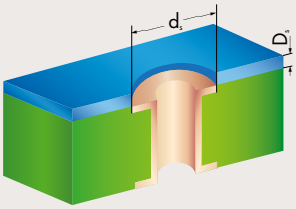

SMD positioning pattern

d_i: Plated through-hole diameter
d_A: Outer diameter of metal-plated PCB hole*
H: PCB thickness
d_s: Pattern hole diameter
D_s: Pattern thickness
d: Pin diagonal
L: Pin length

* When laying out the metal-plated bore holes, the clearance and creepage distance requirements – as specified in the equipment standards – must be considered.

3

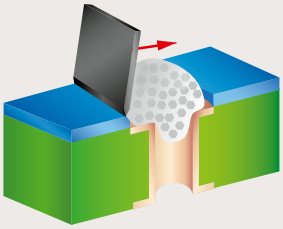

Solder paste application

Solder pin form

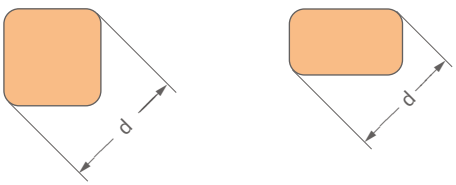

4

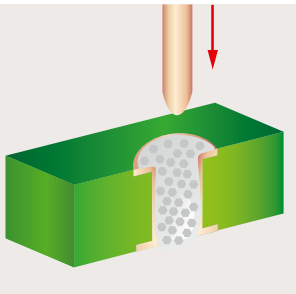

Component assembly, automatic/by hand

5

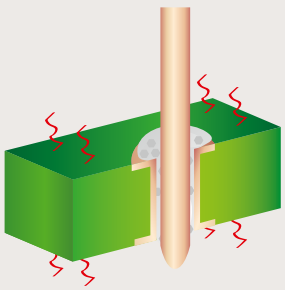

Reflow soldering process

6

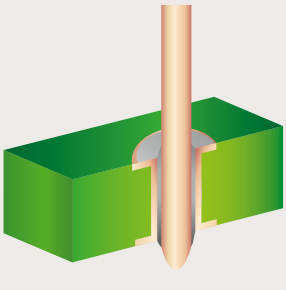

THR soldering joint

THR male header ▸ *MCS* MICRO ▸ 733 Series

Pin spacing: 2.5 mm / 0.098 inches ▸ Solder pin length: 2.4 mm ▸ Color: black

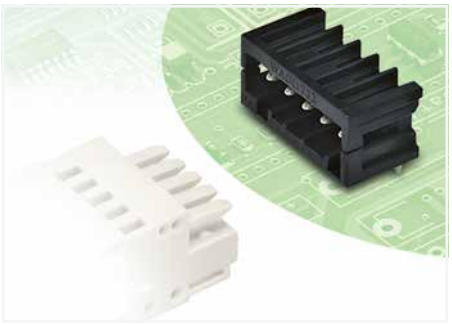

- THR male headers for reflow soldering in SMT applications
- Available in tape-and-reel packaging for automated pick-and-place PCB assembly
- Optimal thermal penetration via pin enclosure design provides lower soldering temperatures
- 100% protected against mismating
- Coding option available

4

Derating Curve
1-conductor female connector (733-102) with
THR male header (733-332/105-604)
Pin spacing: 2.5 mm / Conductor cross-section: 0.5 mm² "f-st"
Based on: EN 60512-5-2 / Reduction factor: 0.8

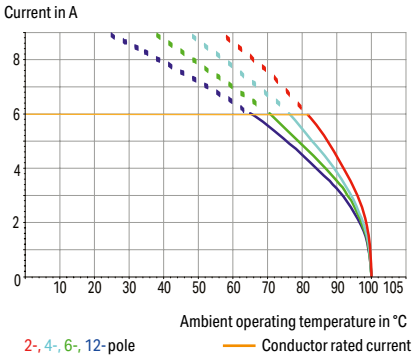

Electrical data			
Ratings per	**IEC/EN 60664-1**		
Overvoltage category	III	III	II
Pollution degree	3	2	2
Nominal voltage	80 V	160 V	320 V
Rated impulse withstand voltage	2.5 kV	2.5 kV	2.5 kV
Rated current	6 A	6 A	6 A
Approvals per	**UL 1059**		
Use group	B	C	D
Rated voltage	150 V	-	-
Rated current	4 A	-	-
Approvals per	**CSA**		
Use group	B	C	D
Rated voltage	150 V	-	-
Rated current	4 A	-	-

Material data	
Material group	I
Insulation material (main housing)	Polyphthalamide (PPA GF)
Flammability class per UL94	V0
Contact material	Electrolytic copper (E_{Cu})
Contact Plating	Tin

Mechanical data	
Solder pin arrangement	over the entire male connector (in-line)
Number of solder pins per potential	1
Solder pin length	2.4 mm
Solder pin dimensions	0.8 x 0.8 mm
Plated through-hole diameter (THR)	1.2 $^{(+0.1)}$ mm

Environmental requirements	
Limit temperature range	-60 … +100 °C
Processing temperature	-35 … +60 °C

Note:
The *MCS – MULTI CONNECTION SYSTEM* includes connectors without breaking capacity in accordance with DIN EN 61984. When used as intended, these connectors must not be connected/disconnected when live or under load.When used as intended, these connectors must not be connected/disconnected when live or under load. The circuit design should ensure header pins, which can be touched, are not live when unmated.

THR soldering	Page 422
Coding	Page 432
See technical section for further information	
Approvals and corresponding ratings, visit www.wago.com	

THR male header ▸ *MCS* MICRO ▸ 733 Series

Pin spacing: 2.5 mm / 0.098 inches ▸ Solder pin length: 2.4 mm ▸ Color: black

Mating direction to the PCB: 0 °

Suitable for automated assembly



733-368/105-604

Pole number	Item No.	PU
2	733-362/105-604	200
3	733-363/105-604	200
4	733-364/105-604	200
5	733-365/105-604	200
6	733-366/105-604	200
7	733-367/105-604	200
8	733-368/105-604	200
9	733-369/105-604	200
10	733-370/105-604	200
12	733-372/105-604	100



733-367/105-604/997-406

Pole number	Item No.	PU
2	733-362/105-604/997-406	300
3	733-363/105-604/997-406	300
4	733-364/105-604/997-406	300
5	733-365/105-604/997-406	300
6	733-366/105-604/997-406	300
7	733-367/105-604/997-406	300
8	733-368/105-604/997-406	300
9	733-369/105-604/997-406	300
10	733-370/105-604/997-406	300
12	733-372/105-604/997-406	300

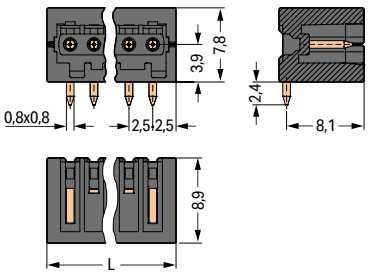

L = (pole no. + 1) x pin spacing

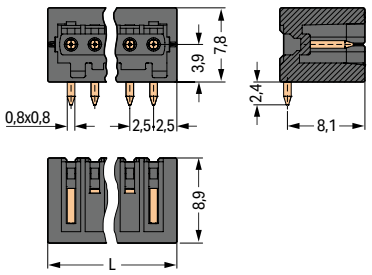

L = (pole no. + 1) x pin spacing

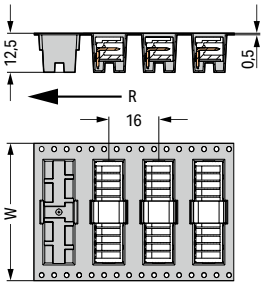

W = tape width
R = feed direction

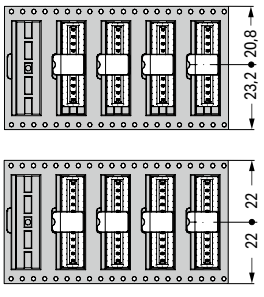

Position with odd number of poles

Position with even number of poles

Pin position in tape-and-reel packaging

PU = packaging unit; SPU = subpackaging unit; Dimensions in mm

Variants:

- Other pole numbers
- Other solder pin lengths
- Gold-plated or partially gold-plated contact surfaces
- Other versions (or variants) can be requested from WAGO Sales or configured at https://configurator.wago.com/.

THR male header ▸ *MCS* MICRO ▸ 733 Series

Pin spacing: 2.5 mm / 0.098 inches ▸ Solder pin length: 2.4 mm ▸ Color: black

Mating direction to the PCB: 90 °

Suitable for automated assembly





4

733-338/105-604

Pole number	Item No.	PU
2	733-332/105-604	200
3	733-333/105-604	200
4	733-334/105-604	200
5	733-335/105-604	200
6	733-336/105-604	200
7	733-337/105-604	200
8	733-338/105-604	200
9	733-339/105-604	200
10	733-340/105-604	200
12	733-342/105-604	100

733-338/105-604/997-446

Pole number	Item No.	PU
2	733-332/105-604/997-446	290
3	733-333/105-604/997-446	290
4	733-334/105-604/997-446	290
5	733-335/105-604/997-446	290
6	733-336/105-604/997-446	290
7	733-337/105-604/997-446	290
8	733-338/105-604/997-446	290
9	733-339/105-604/997-446	290
10	733-340/105-604/997-446	290
12	733-342/105-604/997-446	290

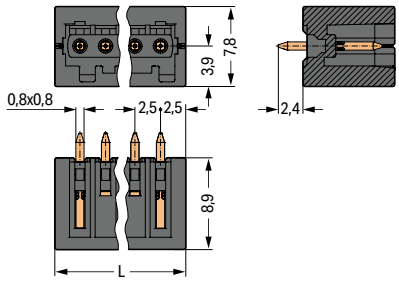

L = (pole no. + 1) x pin spacing

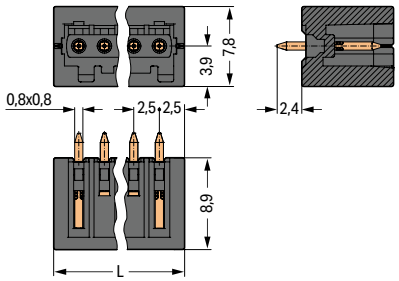

L = (pole no. + 1) x pin spacing

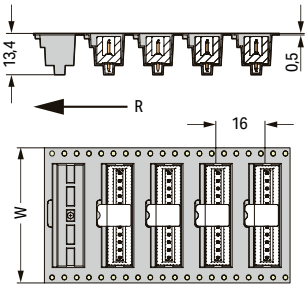

W = tape width
R = feed direction

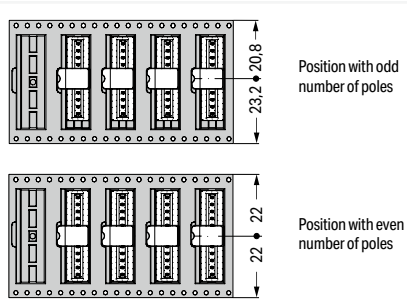

Pin position in tape-and-reel packaging

PU = packaging unit; SPU = subpackaging unit; Dimensions in mm

Variants:
- Other pole numbers
- Other solder pin lengths
- Gold-plated or partially gold-plated contact surfaces
- Other versions (or variants) can be requested from WAGO Sales or configured at https://configurator.wago.com/.

Direct Marking
MCS MICRO

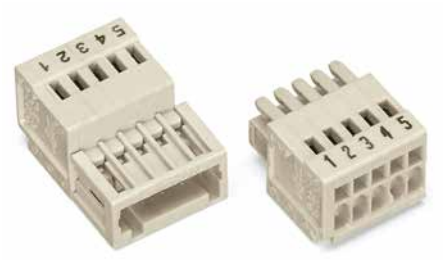



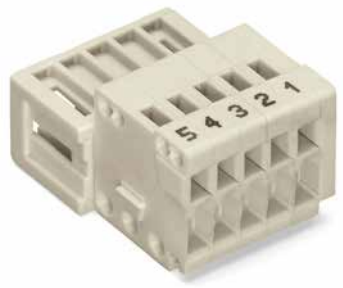

4

The pole numbers of male and female connectors for CAGE CLAMP® termination can be marked via factory direct marking.

Two standard marking orientations are available:
1. Marking perpendicular to conductor entry
2. Marking parallel to conductor entry

Other customized marking options are available upon request.

Direct marking is not suitable for MCS PCB male headers. WAGO recommends pole marking on the PCB for these headers.

Direct marking of female connectors, perpendicular to conductor entry, 1 ... pole no., item no. suffix.: /. . . - 047	
Version	**Item No. Example**
1-cond. female connector,5-pole, light gray	**733-105/000-047**
1-cond. female connector, with locking levers, 5-pole, light gray	**733-105/037-047**
1-cond. female connector, with strain relief plate, 5-pole, light gray	**733-105/033-047**
1-cond. female connector, with locking levers and strain relief plate, 5-pole, light gray	**733-105/037-047/033-000**

Direct marking of male connectors, perpendicular to conductor entry, pole no. ... 1, item no. suffix.: /. . . - 044	
Version	**Item No. Example**
1-cond. male connector, 5-pole, light gray	**733-205/000-044**
1-cond. male connector, with strain relief plate, 5-pole, light gray	**733-205/033-044**



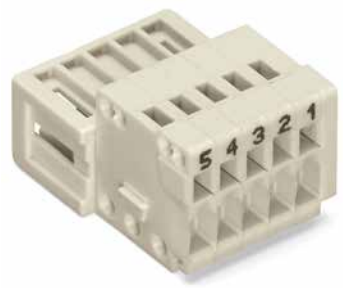

Direct marking of female connectors, parallel to conductor entry, 1 ... pole no., item no. suffix.: /. . . - 9037	
Version	**Item No. Example**
1-cond. female connector, 5-pole, light gray	**733-105/000-9037**
1-cond. female connector, with locking levers, 5-pole, light gray	**733-105/037-9037**
1-cond. female connector, with strain relief plate, 5-pole, light gray	**733-105/033-9037**
1-cond. female connector, with locking levers and strain relief plate, 5-pole, light gray	**733-105/037-9037/033-000**

Direct marking of male connectors, parallel to conductor entry, pole no. ... 1, item no. suffix.: /. . . - 9034	
Version	**Item No. Example**
1-cond. male connector, 5-pole, light gray	**733-205/000-9034**
1-cond. male connector, with strain relief plate, 5-pole, light gray	**733-205/033-9034**

Operating tool ▸ Suitable for male and female connectors with CAGE CLAMP® connection ▸ Operating lever



733-130

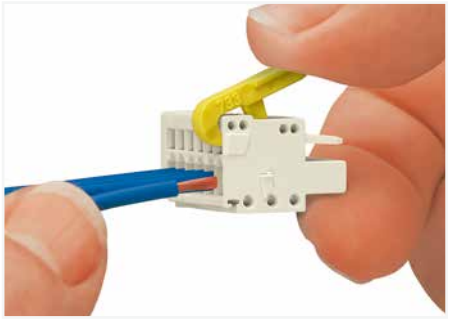

Conductor termination via operating tool (733-191)

Color	Item No.	PU (SPU)
white	**733-130**	100 (25)
yellow	**733-191**	100 (25)

PU = packaging unit; SPU = subpackaging unit

Operating tool ▸ Suitable for male and female connectors with 2.5 mm, 3.5 mm, 3.81 mm pin spacing and CAGE CLAMP® connection ▸ Operating pliers



210-251

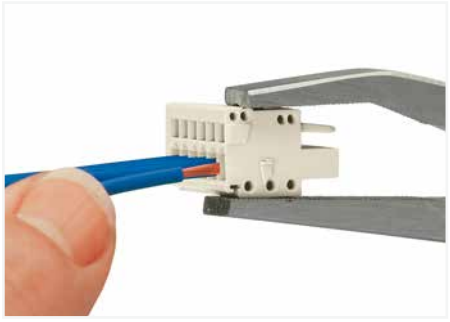

Inserting a conductor via operating tool.

Color	Item No.	PU (SPU)
yellow	210-251	20 (1)

4

PU = packaging unit; SPU = subpackaging unit

Coding ▸ Suitable for male connectors



733-330

Color	Item No.	PU (SPU)
○ white	**733-330**	1000 (100)
● black	**733-331**	1000 (100)



Coding a male header – fitting coding key(s).

4

PU = packaging unit; SPU = subpackaging unit

Strain relief plate ▸ Suitable for standard male and female connectors (2.5 mm; 3.5 mm; 5 mm; 7.5 mm pin spacing)



734-129

Width	Item No.	PU (SPU)
6 mm	**734-127**	100 (25)
12.5 mm	**734-128**	100 (25)
25 mm	**734-129**	100 (25)

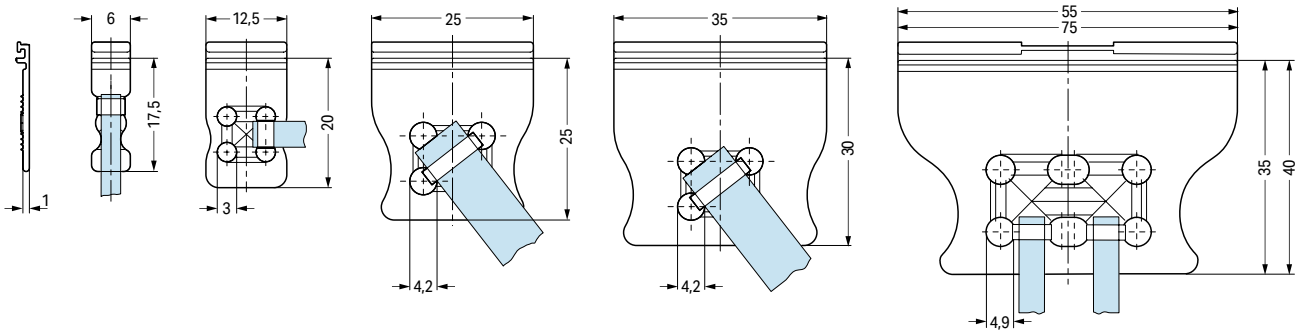

The arrangement of the attachments for cable ties allows single conductors or multi-core cables to be secured in different ways. The width of the cable ties must correspond to the hole dimensions of the strain relief plates shown above.

PU = packaging unit; SPU = subpackaging unit; Dimensions in mm

Strain relief plate ▸ Suitable for standard male and female connectors (2.5 mm; 3.5 mm; 5 mm; 7.5 mm pin spacing)

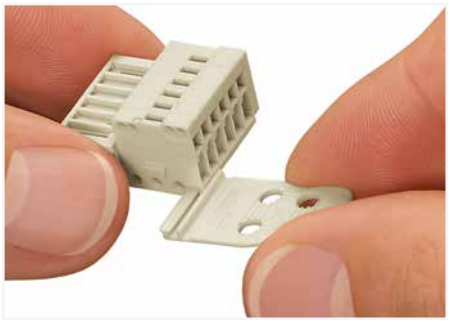

Strain relief plates for factory or in-the-field assembly



Strain relief plate, for factory assembly
1-conductor female connector, 2.5 mm pin spacing, light gray,
12-pole, with strain relief plate
733-112/034-000



Strain relief plate, for factory assembly
1-conductor female connector, 2.5 mm pin spacing, light gray,
2-pole, with strain relief plate (733-102/032-000)



WAGO MULTI CONNECTION SYSTEM
MINI

WAGO *MULTI CONNECTION SYSTEM* MINI

Pin Spacing: 3.5 mm, 3.81 mm ▸ 1.5 mm²

		Pin Spacing	Page
	*MCS* MINI 1-Conductor Female Connectors ▸ Actuation type: Operating tool ▸ CAGE CLAMP®	3.5 mm 3.81 mm	440 472
	*MCS* MINI 1-Conductor Female Connectors ▸ Actuation type: Push-button▸ CAGE CLAMP®	3.5 mm 3.81 mm	444 474
	*MCS* MINI 1-Conductor Female Connectors ▸ Actuation type: Lever ▸ CAGE CLAMP®	3.5 mm	448
	*MCS* MINI 1-Conductor Male Connectors ▸ Actuation type: Operating tool ▸ CAGE CLAMP®	3.5 mm 3.81 mm	450 478
	*MCS* MINI 2-Conductor Combi Strips ▸ Actuation type: Operating tool ▸ CAGE CLAMP®	3.5 mm	454
	*MCS* MINI THT Female Headers	3.5 mm 3.81 mm	458 480
	*MCS* MINI THT Male Headers THR Male Headers	3.5 mm 3.81 mm 3.5 mm 3.81 mm	462 484 468 488
	*MCS* MINI Accessories Accessories and Tools		492 1063

5

MCS **MINI**
Description and Installation

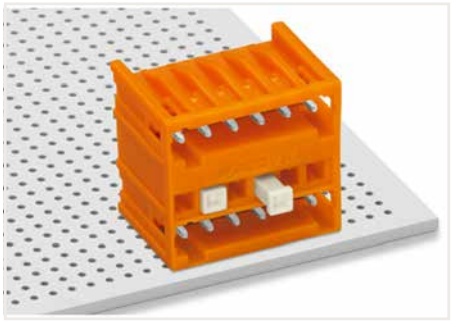

Coding a THT double-deck male header – lower level.

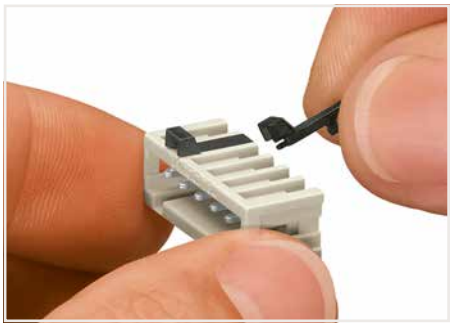

Coding a male header – fitting coding key(s).

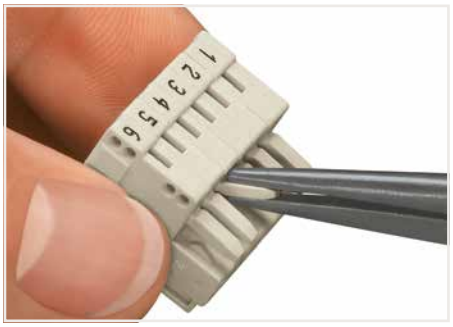

Coding a female connector – removing coding finger(s).

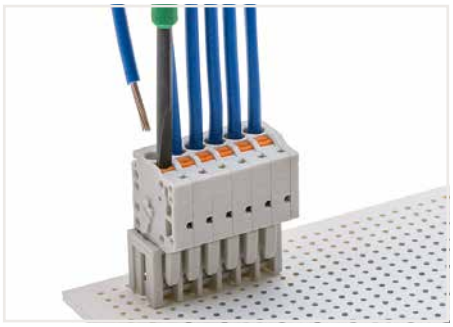

Inserting a fine stranded conductor into Push-in CAGE CLAMP® unit via push-button.

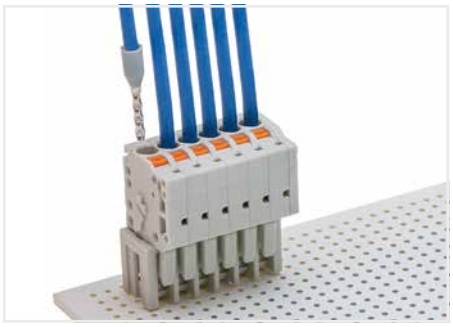

Solid and ferruled conductors are terminated by simply pushing them into unit.

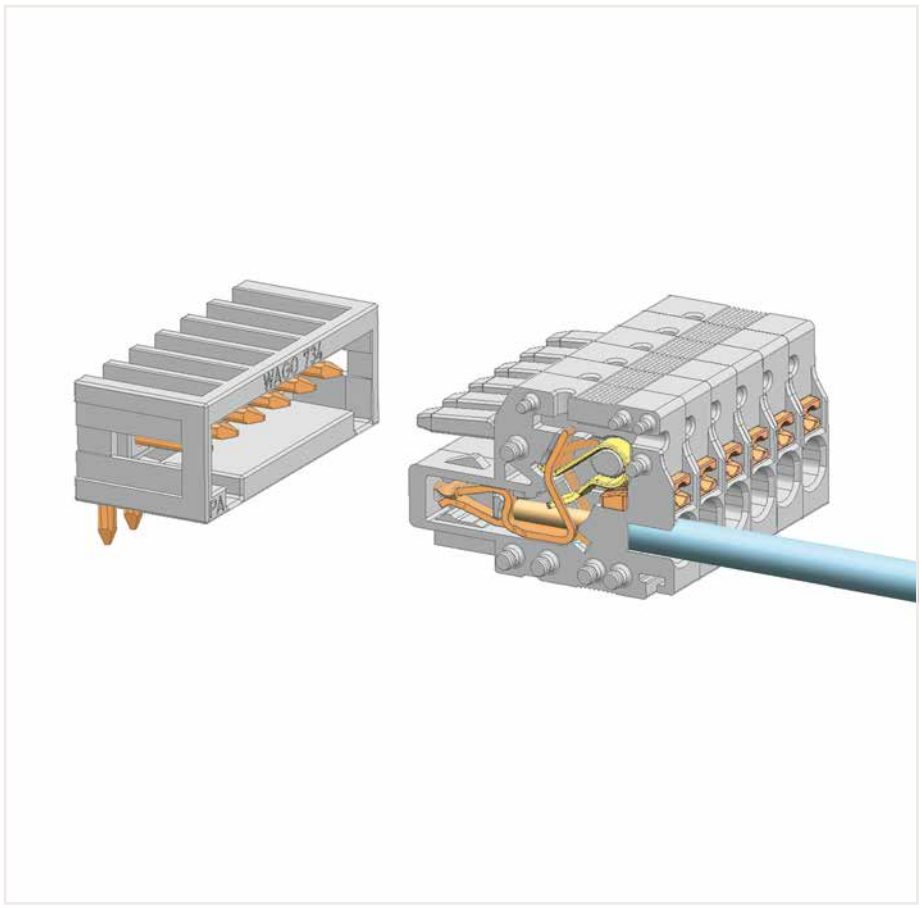

Pin spacing: 3.5 mm and 3.81 mm, Push-in CAGE CLAMP®

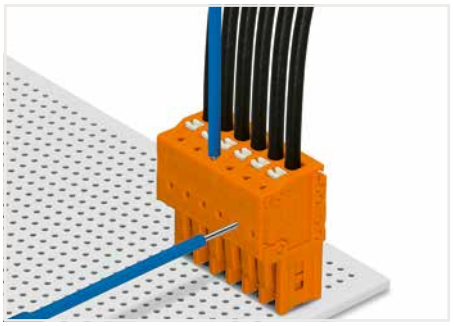

Testing via 1 mm Ø test pin (735-500).
Push-in CAGE CLAMP® termination – parallel to conductor entry



Labeling via direct marking or self-adhesive strips.

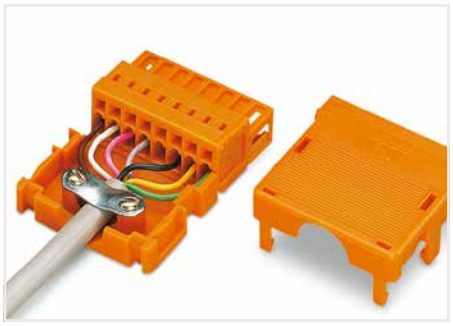

Strain relief housing for 734 Series Male and Female Connectors with CAGE CLAMP® connection.

CAGE CLAMP®

MCS **MINI**
Description and Installation

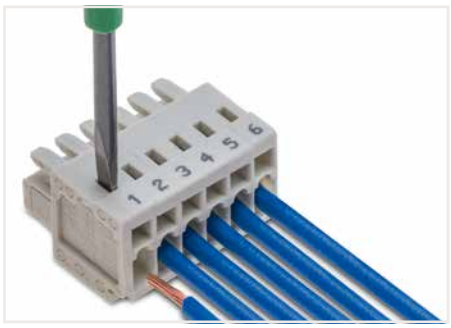

Inserting a conductor via (2.5 x 0.4) mm screwdriver – CAGE CLAMP® actuation perpendicular to conductor entry.



Inserting a conductor via (2.5 x 0.4) mm screwdriver – CAGE CLAMP® actuation parallel to conductor entry.

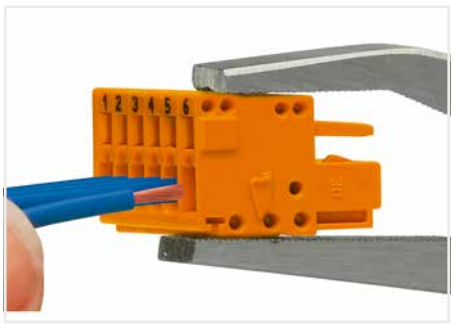

Inserting a conductor into CAGE CLAMP® unit via operating tool (210-251 or 210-250).

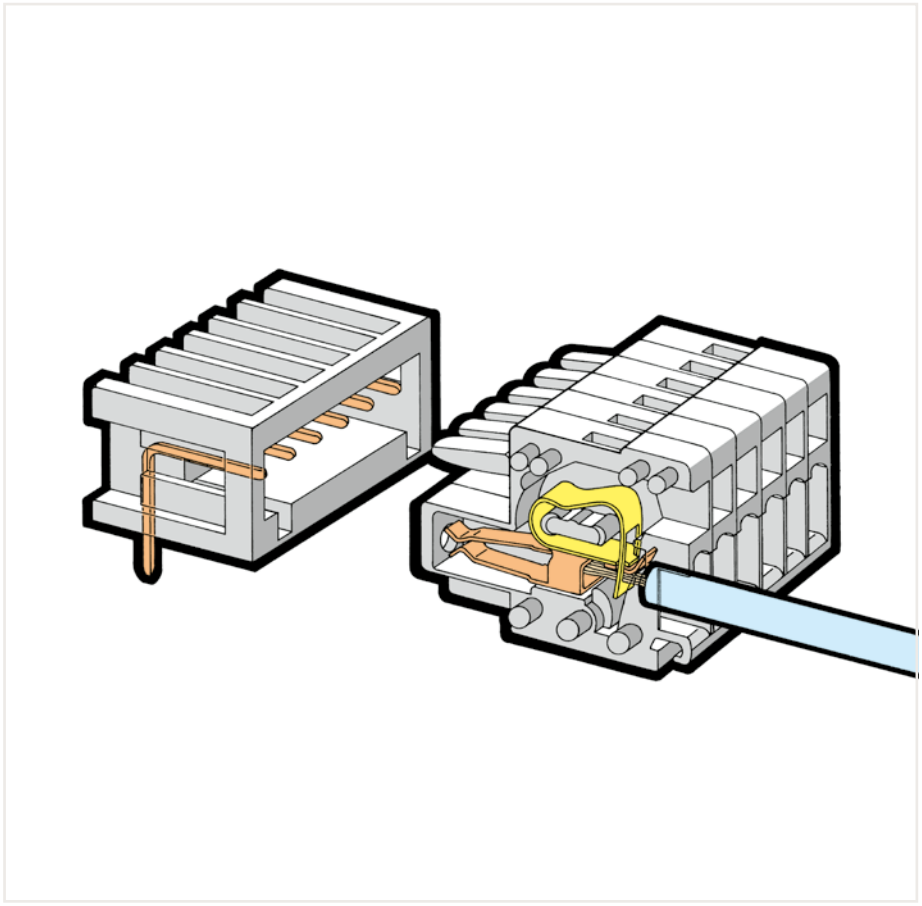

Pin spacing: 3.5 mm and 3.81 mm, CAGE CLAMP®

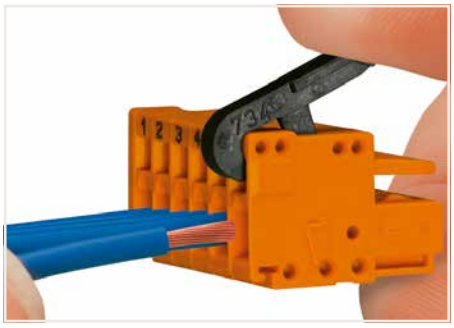

Inserting a conductor into CAGE CLAMP® unit via operating lever (734-191).

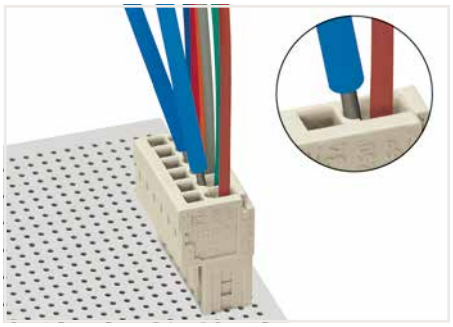

Testing via 1 mm Ø test pin (735-500) – CAGE CLAMP® connection – touch contact.

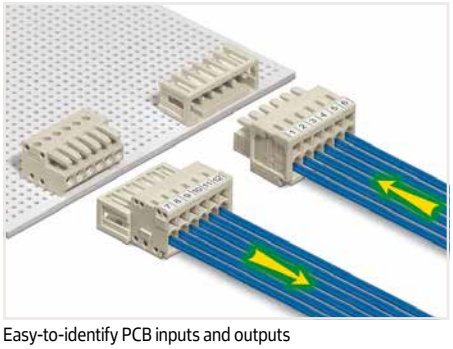

Easy-to-identify PCB inputs and outputs

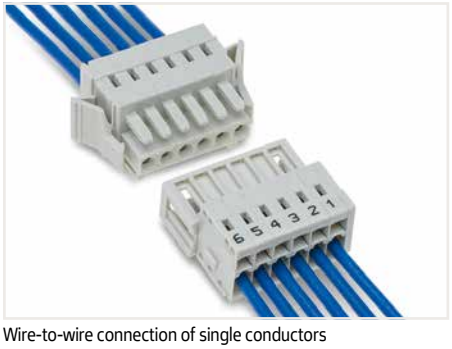

Wire-to-wire connection of single conductors

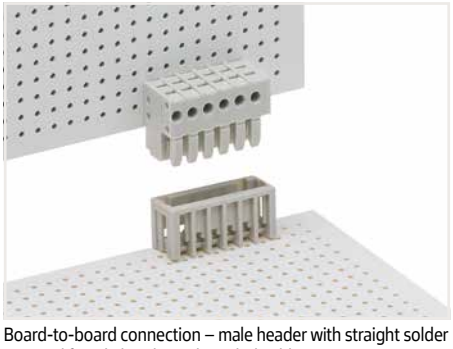

Board-to-board connection – male header with straight solder pins and female header with angled solder pins

1-conductor female connector ▸ *MCS* MINI ▸ 734 Series

Pin spacing: 3.5 mm / 0.138 inches ▸ Actuation type: Operating tool ▸ CAGE CLAMP® ▸ Color: light gray

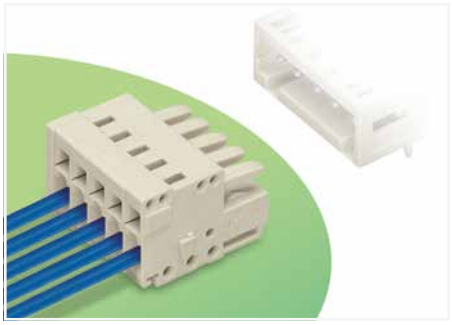

- Universal connection for all conductor types
- Easy cable pre-assembly and on-unit wiring via vertical and horizontal CAGE CLAMP® actuation
- Strain relief plates and housings for field assembly
- 100% protected against mismating
- Coding option available

5

Derating Curve
1-conductor female connector (734-102) with
THT male header (734-132)
Pin spacing: 3.5 mm / Conductor cross-section: 1.5 mm² "f-st"
Based on: EN 60512-5-2 / Reduction factor: 0.8

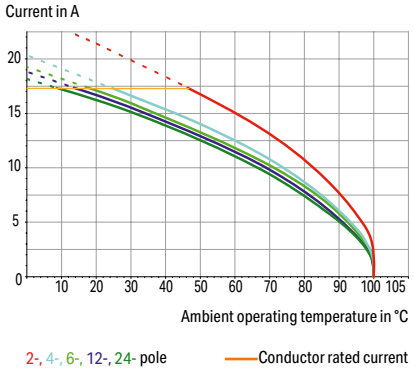

Electrical data			
Ratings per	**IEC/EN 60664-1**		
Overvoltage category	III	III	II
Pollution degree	3	2	2
Nominal voltage	160 V	160 V	320 V
Rated impulse withstand voltage	2.5 kV	2.5 kV	2.5 kV
Rated current	10 A	10 A	10 A
Approvals per	**UL 1059**		
Use group	B	C	D
Rated voltage	300 V	-	300 V
Rated current	10 A	-	10 A
Approvals per	**CSA**		
Use group	B	C	D
Rated voltage	300 V	-	300 V
Rated current	10 A	-	10 A

Connection Data	
Connection technology	CAGE CLAMP®
Solid conductor	0.08 … 1.5 mm² / 28 … 14 AWG
Fine-stranded conductor	0.08 … 1.5 mm² / 28 … 14 AWG
Fine-stranded conductor; with insulated ferrule	0.25 … 1.5 mm²
Fine-stranded conductor; with uninsulated ferrule	0.25 … 1.5 mm²
Note (conductor cross-section)	Terminating 1.5 mm² conductors is possible; however insulation diameter does not allow clamping units to be terminated in a row.

Material data	
Material group	I
Insulation material (main housing)	Polyamide (PA66)
Flammability class per UL94	V0
Clamping spring material	Chrome-nickel spring steel (CrNi)
Contact material	Copper alloy
Contact Plating	Tin

Environmental requirements	
Limit temperature range	-60 … +100 °C
Processing temperature	-35 … +60 °C

Note:
The *MCS – MULTI CONNECTION SYSTEM* includes connectors without breaking capacity in accordance with DIN EN 61984. When used as intended, these connectors must not be connected/disconnected when live or under load.When used as intended, these connectors must not be connected/disconnected when live or under load. The circuit design should ensure header pins, which can be touched, are not live when unmated.

Ferrule	Page 1081
Installation	Page 500
Insulation stop	Page 499
Marking	Page 1066
Strain relief	Page 506
Test and measurement	Page 1088
Tool	Page 496, 1072
Direct marking	Page 492
See technical section for further information	
Approvals and corresponding ratings, visit www.wago.com	

1-conductor female connector ▸ *MCS* MINI ▸ 734 Series

Pin spacing: 3.5 mm / 0.138 inches ▸ Actuation type: Operating tool ▸ CAGE CLAMP® ▸ Color: light gray



734-106

Pole number	Item No.	PU
2	734-102	200
3	734-103	200
4	734-104	100
5	734-105	100
6	734-106	100
7	734-107	100
8	734-108	50
9	734-109	50
10	734-110	50
11	734-111	50
12	734-112	50
13	734-113	50
14	734-114	50
16	734-116	25
18	734-118	25
20	734-120	25
24	734-124	25

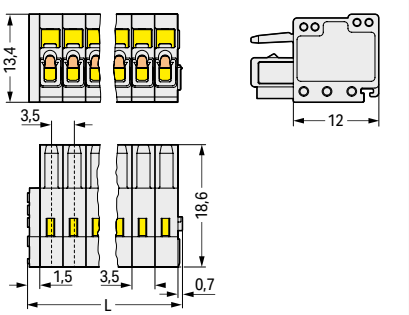

L = (pole no. x pin spacing) + 2.2 mm

Locking of plug-in connection: Locking lever



734-106/037-000

Pole number	Item No.	PU (SPU)
2	734-102/037-000	100
3	734-103/037-000	100
4	734-104/037-000	100
5	734-105/037-000	50
6	734-106/037-000	50
7	734-107/037-000	50
8	734-108/037-000	50
9	734-109/037-000	50
10	734-110/037-000	50
11	734-111/037-000	50 (1)
12	734-112/037-000	50
13	734-113/037-000	25
14	734-114/037-000	25
16	734-116/037-000	25
18	734-118/037-000	25
20	734-120/037-000	25
24	734-124/037-000	10

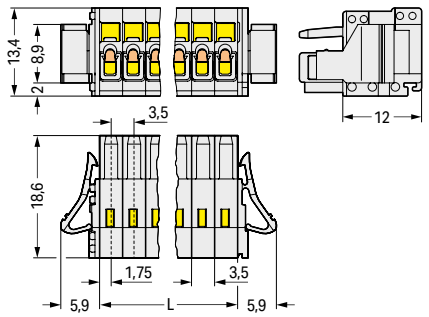

L = pole no. x pin spacing

Locking of plug-in connection: Screw flange



734-106/107-000

Pole number	Item No.	PU
2	734-102/107-000	100
3	734-103/107-000	100
4	734-104/107-000	100
5	734-105/107-000	50
6	734-106/107-000	50
7	734-107/107-000	50
8	734-108/107-000	50
9	734-109/107-000	50
10	734-110/107-000	50
11	734-111/107-000	50
12	734-112/107-000	50
13	734-113/107-000	25
14	734-114/107-000	25
16	734-116/107-000	25
18	734-118/107-000	25
20	734-120/107-000	25
24	734-124/107-000	10

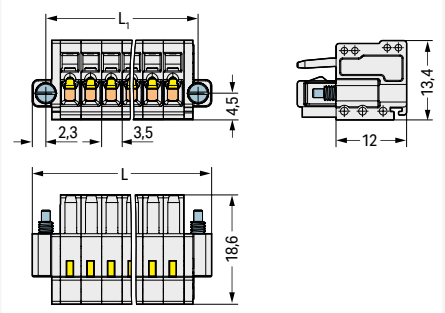

L = (pole no. x pin spacing) + 9.5 mm
L_1 = (pole no. x pin spacing) + 4.9 mm

PU = packaging unit; SPU = subpackaging unit; Dimensions in mm

Variants:
- Other pole numbers
- Gold-plated or partially gold-plated contact surfaces
- Other versions (or variants) can be requested from WAGO Sales or configured at https://configurator.wago.com/.

1-conductor female connector ▸ *MCS* MINI ▸ 734 Series

Pin spacing: 3.5 mm / 0.138 inches ▸ Actuation type: Operating tool ▸ CAGE CLAMP® ▸ Color: light gray

Mounting type: Panel mounting ▸ Mounting type: Snap-in foot

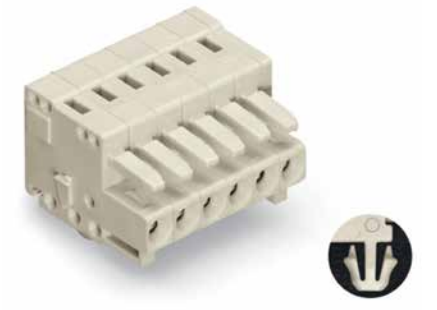

734-106/008-000

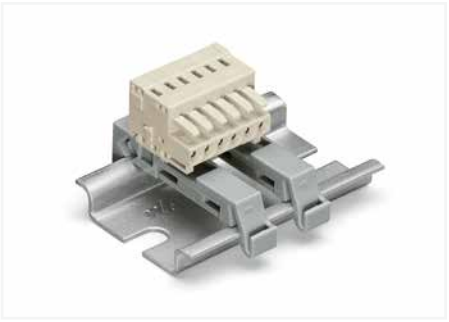

Using two DIN-35 rail mounting adapters (209-137) for 3 or more poles; distance between two mounting adapters: maximum 7 poles

Pole number	Item No.	PU (SPU)
2	734-102/008-000	200
3	734-103/008-000	200
4	734-104/008-000	100
5	734-105/008-000	100
6	734-106/008-000	100
7	734-107/008-000	50
8	734-108/008-000	50
9	734-109/008-000	50
10	734-110/008-000	50
11	734-111/008-000	50
12	734-112/008-000	50
13	734-113/008-000	50
14	734-114/008-000	50
16	734-116/008-000	25 (21)
18	734-118/008-000	25
20	734-120/008-000	25
24	734-124/008-000	25

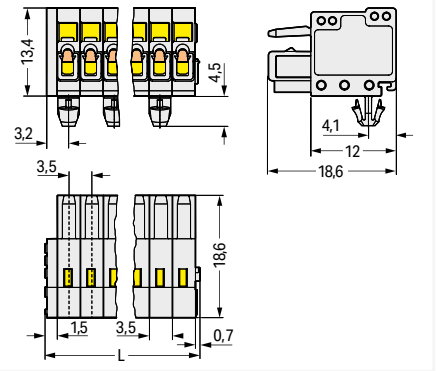

L = (pole no. x pin spacing) + 2.2 mm

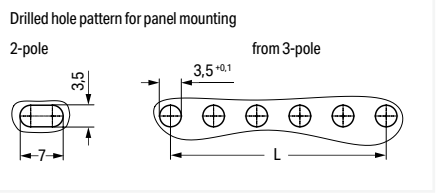

Even pole number: L = (pole no. – 2) x pin spacing
Odd pole number: L = (pole no. – 1) x pin spacing

PU = packaging unit; SPU = subpackaging unit; Dimensions in mm

Variants:
- Other pole numbers
- Gold-plated or partially gold-plated contact surfaces
- Other versions (or variants) can be requested from WAGO Sales or configured at https://configurator.wago.com/.

1-conductor female connector ▸ *MCS* MINI ▸ 2734 Series

Pin spacing: 3.5 mm / 0.138 inches ▸ Actuation type: Push-button ▸ Push-in CAGE CLAMP® ▸ Color: light gray

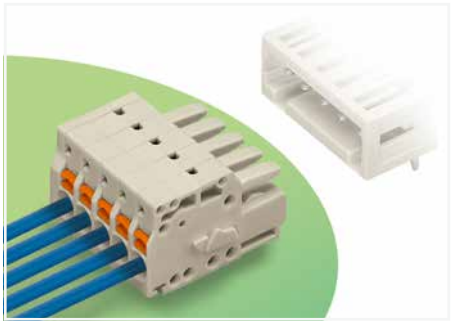

- Universal connection for all conductor types
- Easy-to-use design does not require specialty tools
- Ability to wire while mated
- Simple, push-in termination of solid and ferruled conductors
- Integrated test ports for testing parallel to the conductor entry
- 100% protected against mismating
- Coding option available

5

Derating Curve
1-conductor female connector (2734-102) with THT male header (734-132)
Pin spacing: 3.5 mm / Conductor cross-section: 1.5 mm² "f-st"
Based on: EN 60512-5-2 / Reduction factor: 0.8

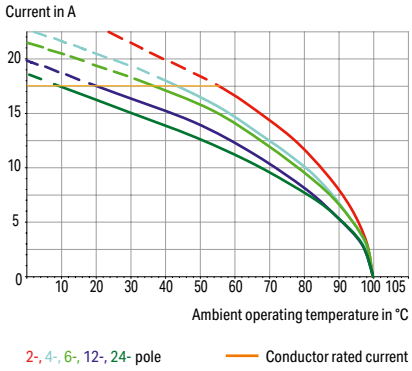

Electrical data			
Ratings per	**IEC/EN 60664-1**		
Overvoltage category	III	III	II
Pollution degree	3	2	2
Nominal voltage	160 V	160 V	320 V
Rated impulse withstand voltage	2.5 kV	2.5 kV	2.5 kV
Rated current	10 A	10 A	10 A
Approvals per	**UL 1059**		
Use group	B	C	D
Rated voltage	300 V	-	300 V
Rated current	10 A	-	10 A
Approvals per	**CSA**		
Use group	B	C	D
Rated voltage	300 V	-	300 V
Rated current	10 A	-	10 A

Connection Data	
Connection technology	Push-in CAGE CLAMP®
Strip length	8 … 9 mm / 0.31 … 0.35 inches
Solid conductor	0.2 … 1.5 mm² / 24 … 16 AWG
Fine-stranded conductor	0.2 … 1.5 mm² / 24 … 16 AWG
Fine-stranded conductor; with insulated ferrule	0.25 … 0.75 mm²
Fine-stranded conductor; with uninsulated ferrule	0.25 … 1.5 mm²

Material data	
Material group	I
Insulation material (main housing)	Polyamide (PA66)
Flammability class per UL94	V0
Clamping spring material	Chrome-nickel spring steel (CrNi)
Contact material	Copper alloy
Contact Plating	Tin

Environmental requirements	
Limit temperature range	-60 … +100 °C
Processing temperature	-35 … +60 °C

Note:
The *MCS – MULTI CONNECTION SYSTEM* includes connectors without breaking capacity in accordance with DIN EN 61984. When used as intended, these connectors must not be connected/disconnected when live or under load.When used as intended, these connectors must not be connected/disconnected when live or under load. The circuit design should ensure header pins, which can be touched, are not live when unmated.

Ferrule	Page 1081
Installation	Page 500, 1071
Strain relief	Page 506
Tool	Page 496, 1072
Direct marking	Page 492
Cutout dimensions	Page 494
See technical section for further information	
Approvals and corresponding ratings, visit www.wago.com	

1-conductor female connector ▸ *MCS* MINI ▸ 2734 Series

Pin spacing: 3.5 mm / 0.138 inches ▸ Actuation type: Push-button ▸ Push-in CAGE CLAMP® ▸ Color: light gray

	Locking of plug-in connection: Locking lever	Locking of plug-in connection: Screw flange

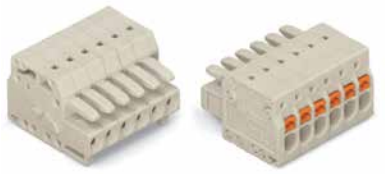





2734-106

Pole number	Item No.	PU
2	2734-102	200
3	2734-103	200
4	2734-104	100
5	2734-105	100
6	2734-106	100
7	2734-107	100
8	2734-108	50
9	2734-109	50
10	2734-110	50
11	2734-111	50
12	2734-112	50
13	2734-113	50
14	2734-114	50
16	2734-116	25
18	2734-118	25
20	2734-120	25
24	2734-124	25

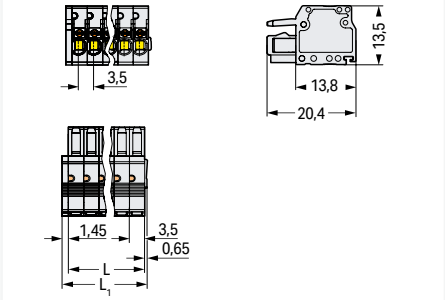

L = pole no. x pin spacing
L_1 = (pole no. x pin spacing) + 2.1 mm

2734-106/037-000

Pole number	Item No.	PU
2	2734-102/037-000	100
3	2734-103/037-000	100
4	2734-104/037-000	100
5	2734-105/037-000	50
6	2734-106/037-000	50
7	2734-107/037-000	50
8	2734-108/037-000	50
9	2734-109/037-000	50
10	2734-110/037-000	50
11	2734-111/037-000	50
12	2734-112/037-000	50
13	2734-113/037-000	25
14	2734-114/037-000	25
16	2734-116/037-000	25
18	2734-118/037-000	25
20	2734-120/037-000	25
24	2734-124/037-000	10

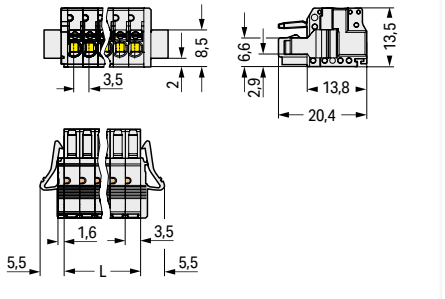

L = pole no. x pin spacing

2734-106/107-000

Pole number	Item No.	PU
2	2734-102/107-000	100
3	2734-103/107-000	100
4	2734-104/107-000	100
5	2734-105/107-000	50
6	2734-106/107-000	50
7	2734-107/107-000	50
8	2734-108/107-000	50
9	2734-109/107-000	50
10	2734-110/107-000	50
11	2734-111/107-000	50
12	2734-112/107-000	50
13	2734-113/107-000	25
14	2734-114/107-000	25
16	2734-116/107-000	25
18	2734-118/107-000	25
20	2734-120/107-000	25
24	2734-124/107-000	10

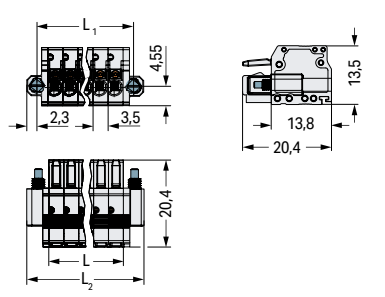

L = pole no. x pin spacing
L_1 = (pole no. x pin spacing) + 4.9 mm
L_2 = (pole no. x pin spacing) + 9.5 mm

PU = packaging unit; SPU = subpackaging unit; Dimensions in mm

Variants:
- Other pole numbers
- Gold-plated or partially gold-plated contact surfaces
- Other versions (or variants) can be requested from WAGO Sales or configured at https://configurator.wago.com/.

1-conductor female connector ▸ *MCS* MINI ▸ 2734 Series

Pin spacing: 3.5 mm / 0.138 inches ▸ Actuation type: Push-button ▸ Push-in CAGE CLAMP® ▸ Color: light gray

Mounting type: Feed-through mounting; Panel mounting ▸ Mounting type: Mounting flange



2734-106/031-000

Pole number	Item No.	PU
2	**2734-102/031-000**	100
3	**2734-103/031-000**	100
4	**2734-104/031-000**	50
5	**2734-105/031-000**	50
6	**2734-106/031-000**	50
7	**2734-107/031-000**	50
8	**2734-108/031-000**	50
9	**2734-109/031-000**	50
12	**2734-112/031-000**	25

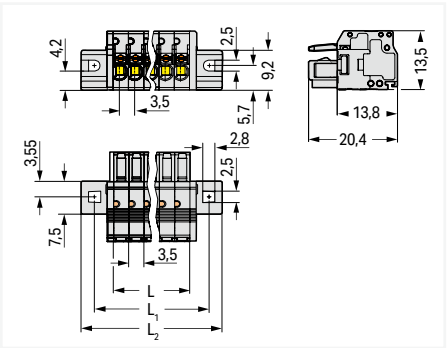

L = pole no. x pin spacing
L_1 = (pole no. x pin spacing) + 8.8 mm
L_2 = (pole no. x pin spacing) + 14.8 mm

Mounting type: Feed-through mounting; Panel mounting ▸ Mounting type: Mounting flange ▸ with reinforcing strips



2734-110/027-000

Pole number	Item No.	PU
10	**2734-110/027-000**	50
11	**2734-111/027-000**	25
12	**2734-112/027-000**	25
13	**2734-113/027-000**	25
14	**2734-114/027-000**	25
16	**2734-116/027-000**	25
18	**2734-118/027-000**	25
20	**2734-120/027-000**	25
24	**2734-124/027-000**	10

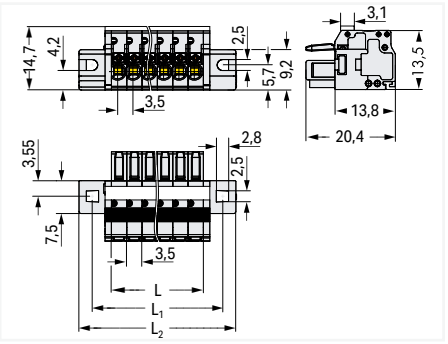

L = pole no. x pin spacing
L_1 = (pole no. x pin spacing) + 8.8 mm
L_2 = (pole no. x pin spacing) + 14.8 mm

PU = packaging unit; SPU = subpackaging unit; Dimensions in mm

Variants:
- Other pole numbers
- Gold-plated or partially gold-plated contact surfaces
- Other versions (or variants) can be requested from WAGO Sales or configured at https://configurator.wago.com/.

1-conductor female connector ▸ *MCS* MINI ▸ 2734 Series

Pin spacing: 3.5 mm / 0.138 inches ▸ Actuation type: Lever ▸ Push-in CAGE CLAMP® ▸ Color: light gray



- Intuitive and tool-free lever actuation
- Universal connection for all conductor types
- Push-in termination of solid and ferruled conductors
- Test slot 90° to conductor entry
- 100% protected against mismating
- Coding option available

5

Electrical data			
Ratings per	**IEC/EN 60664-1**		
Overvoltage category	III	III	II
Pollution degree	3	2	2
Nominal voltage	160 V	160 V	320 V
Rated impulse withstand voltage	2.5 kV	2.5 kV	2.5 kV
Rated current	10 A	10 A	10 A
Approvals per	**UL 1059**		
Use group	B	C	D
Rated voltage	300 V	-	300 V
Rated current	10 A	-	10 A
Approvals per	**CSA**		
Use group	B	C	D
Rated voltage	300 V	-	300 V
Rated current	10 A	-	10 A

Connection Data	
Connection technology	Push-in CAGE CLAMP®
Strip length	9 … 10 mm / 0.35 … 0.39 inches
Solid conductor	0.14 … 1.5 mm² / 26 … 14 AWG
Solid conductor; push-in termination	0.34 … 1.5 mm² / 22 … 14 AWG
Fine-stranded conductor	0.14 … 1.5 mm² / 26 … 14 AWG
Fine-stranded conductor; with insulated ferrule	0.14 … 0.75 mm²
Fine-stranded conductor; with uninsulated ferrule	0.14 … 1 mm²

Material data	
Material group	I
Insulation material (main housing)	Polyamide (PA66)
Flammability class per UL94	V0
Clamping spring material	Chrome-nickel spring steel (CrNi)
Contact material	Copper alloy
Contact Plating	Tin

Environmental requirements	
Limit temperature range	-60 … +100 °C
Processing temperature	-35 … +60 °C

Note:
The *MCS – MULTI CONNECTION SYSTEM* includes connectors without breaking capacity in accordance with DIN EN 61984. When used as intended, these connectors must not be connected/disconnected when live or under load.When used as intended, these connectors must not be connected/disconnected when live or under load. The circuit design should ensure header pins, which can be touched, are not live when unmated.

Coding	Page 497
Jumper	Page 510
Locking system	Page 502
Strain relief	Page 504
Test and measurement	Page 1088

See technical section for further information

Approvals and corresponding ratings, visit www.wago.com

1-conductor female connector ▸ *MCS* MINI ▸ 2734 Series

Pin spacing: 3.5 mm / 0.138 inches ▸ Actuation type: Lever ▸ Push-in CAGE CLAMP® ▸ Color: light gray



2734-1106/0327-0000

Pole number	Item No.	PU
2	2734-1102/327-000	
3	2734-1103/327-000	
4	2734-1104/327-000	
5	2734-1105/327-000	
6	2734-1106/327-000	
7	2734-1107/327-000	
8	2734-1108/327-000	
10	2734-1110/327-000	
12	2734-1112/327-000	
16	2734-1116/327-000	

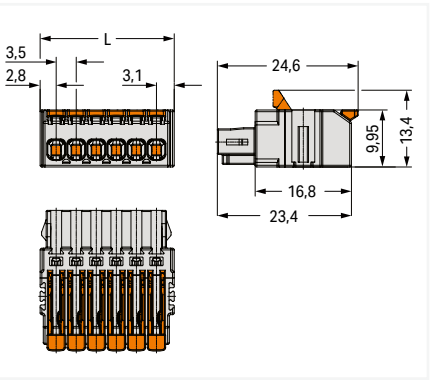

L = (pole no. x pin spacing) + 2.4 mm

Locking of plug-in connection: Lateral locking lever



2734-1106/038-000

Pole number	Item No.	PU
2	2734-1102/038-000	100
3	2734-1103/038-000	100
4	2734-1104/038-000	50
5	2734-1105/038-000	50
6	2734-1106/038-000	50
7	2734-1107/038-000	50
8	2734-1108/038-000	50
10	2734-1110/038-000	50
12	2734-1112/038-000	25
16	2734-1116/038-000	25

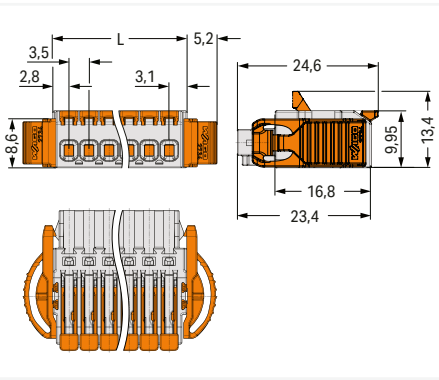

L = (pole no. x pin spacing) + 2.4 mm

Locking of plug-in connection: Center locking lever



2734-1106/328-000

Pole number	Item No.	PU
4	2734-1104/328-000	50
5	2734-1105/328-000	50
6	2734-1106/328-000	50
7	2734-1107/328-000	50
8	2734-1108/328-000	50
10	2734-1110/328-000	50
12	2734-1112/329-000	50
16	2734-1116/329-000	25

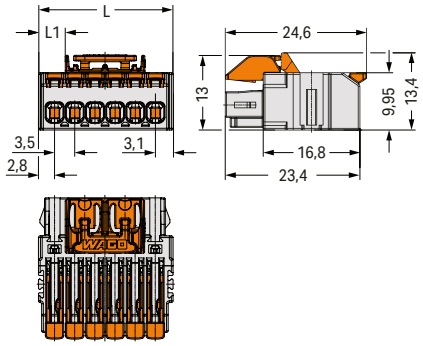

L = (pole no. x pin spacing) + 2.4 mm

Pole no. 4: L1 = 1.15 mm
Pole no. 5 + 6: L1 = 4.65 mm
Pole no. 7 + 8: L1 = 8.15 mm
Pole no. 9 + 10: L1 = 11.65 mm
Pole no. 11 + 12: L1 = 15.15 mm
Pole no. 13 + 14: L1 = 18.65 mm
Pole no. 15 + 16: L1 = 22.15 mm

PU = packaging unit; SPU = subpackaging unit; Dimensions in mm

Variants:

- Other pole numbers
- Other versions (or variants) can be requested from WAGO Sales or configured at https://configurator.wago.com/.

1-conductor male connector ▸ *MCS* MINI ▸ 734 Series

Pin spacing: 3.5 mm / 0.138 inches ▸ Actuation type: Operating tool ▸ CAGE CLAMP® ▸ Color: light gray

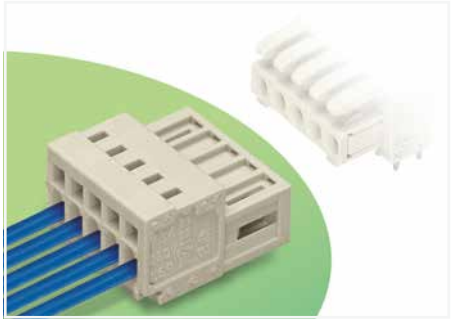

- Universal connection for all conductor types
- Easy cable pre-assembly and on-unit wiring via vertical and horizontal CAGE CLAMP® actuation
- For wire-to-wire and board-to-wire connections
- Strain relief plates and housings for factory and field assembly
- 100% protected against mismating
- Coding option available

5

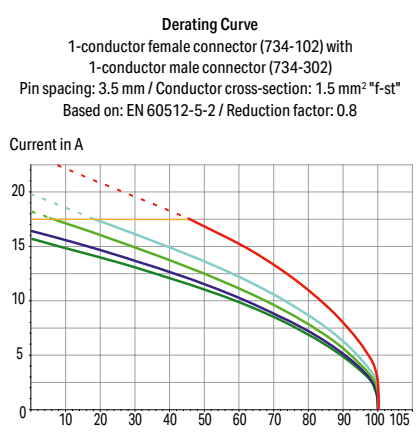

Electrical data			
Ratings per	**IEC/EN 60664-1**		
Overvoltage category	III	III	II
Pollution degree	3	2	2
Nominal voltage	160 V	160 V	320 V
Rated impulse withstand voltage	2.5 kV	2.5 kV	2.5 kV
Rated current	10 A	10 A	10 A
Approvals per	**UL 1059**		
Use group	B	C	D
Rated voltage	300 V	-	300 V
Rated current	10 A	-	10 A
Approvals per	**CSA**		
Use group	B	C	D
Rated voltage	300 V	-	300 V
Rated current	10 A	-	10 A

Connection Data	
Connection technology	CAGE CLAMP®
Strip length	6 … 7 mm / 0.24 … 0.28 inches
Solid conductor	0.08 … 1.5 mm² / 28 … 14 AWG
Fine-stranded conductor	0.08 … 1.5 mm² / 28 … 14 AWG
Fine-stranded conductor; with insulated ferrule	0.25 … 1.5 mm²
Fine-stranded conductor; with uninsulated ferrule	0.25 … 1.5 mm²
Note (conductor cross-section)	Terminating 1.5 mm² conductors is possible; however insulation diameter does not allow clamping units to be terminated in a row.

Material data	
Material group	I
Insulation material (main housing)	Polyamide (PA66)
Flammability class per UL94	V0
Clamping spring material	Chrome-nickel spring steel (CrNi)
Contact material	Electrolytic copper (E_{Cu})
Contact Plating	Tin

Environmental requirements	
Limit temperature range	-60 … +100 °C
Processing temperature	-35 … +60 °C

Note:
The *MCS – MULTI CONNECTION SYSTEM* includes connectors without breaking capacity in accordance with DIN EN 61984. When used as intended, these connectors must not be connected/disconnected when live or under load.When used as intended, these connectors must not be connected/disconnected when live or under load. The circuit design should ensure header pins, which can be touched, are not live when unmated.

Coding	Page 497
Cover	Page 496, 498
Ferrule	Page 1081
Installation	Page 500, 1071
Marking	Page 1066
Mounting adapter	Page 500
Strain relief	Page 506
Test and measurement	Page 1088
Tool	Page 496, 1072
Direct marking	Page 492
Cutout dimensions	Page 494
See technical section for further information	
Approvals and corresponding ratings, visit www.wago.com	

1-conductor male connector ▸ *MCS* MINI ▸ 734 Series

Pin spacing: 3.5 mm / 0.138 inches ▸ Actuation type: Operating tool ▸ CAGE CLAMP® ▸ Color: light gray



734-306

Pole number	Item No.	PU (SPU)
2	734-302	200
3	734-303	200
4	734-304	100
5	734-305	100
6	734-306	100
7	734-307	100
8	734-308	50
9	734-309	50
10	734-310	50
11	734-311	50 (1)
12	734-312	50
13	734-313	50
14	734-314	50
16	734-316	25
18	734-318	25
20	734-320	25
24	734-324	10

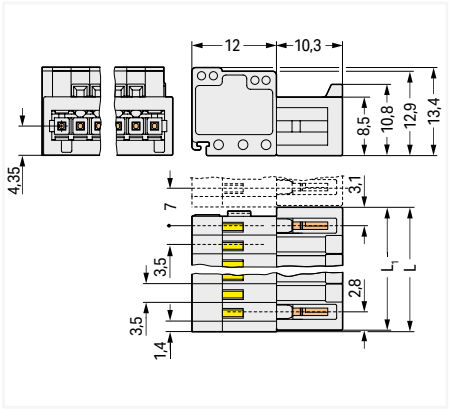

L = (pole no. – 1) x pin spacing + 5.9 mm + 0.45 mm
L_1 = L – 0.45 mm

Locking of plug-in connection: Threaded flange

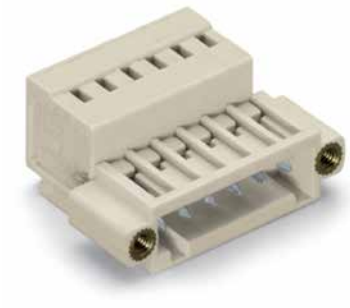

734-306/109-000

Pole number	Item No.	PU
2	734-302/109-000	100
3	734-303/109-000	100
4	734-304/109-000	100
5	734-305/109-000	50
6	734-306/109-000	50
7	734-307/109-000	50
8	734-308/109-000	50
9	734-309/109-000	50
10	734-310/109-000	50
11	734-311/109-000	50
12	734-312/109-000	50
13	734-313/109-000	25
14	734-314/109-000	25
16	734-316/109-000	25
18	734-318/109-000	25
20	734-320/109-000	25
24	734-324/109-000	10

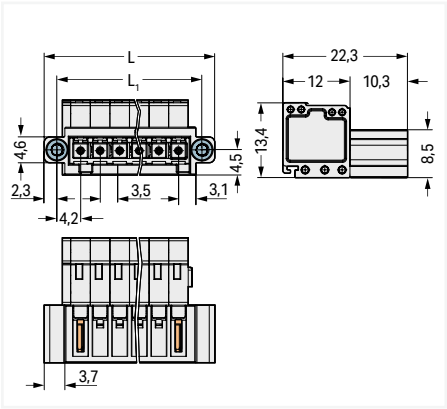

L = (pole no. x pin spacing) + 9.5 mm
L_1 = (pole no. x pin spacing) + 4.9 mm

Mounting type: Panel mounting ▸ Mounting type: Snap-in foot

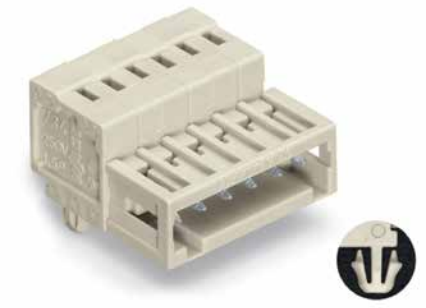

734-306/018-000

Pole number	Item No.	PU
2	734-302/018-000	200
3	734-303/018-000	100
4	734-304/018-000	100
5	734-305/018-000	100
6	734-306/018-000	100
7	734-307/018-000	100
8	734-308/018-000	50
9	734-309/018-000	50
10	734-310/018-000	50
11	734-311/018-000	50
12	734-312/018-000	50
13	734-313/018-000	50
14	734-314/018-000	50
16	734-316/018-000	25
18	734-318/018-000	25
20	734-320/018-000	25
24	734-324/018-000	10

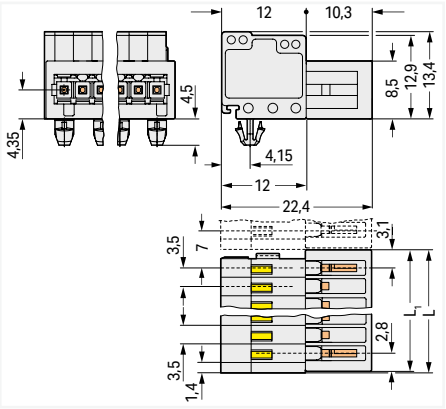

L = (pole no. – 1) x pin spacing + 5.9 mm + 0.45 mm
L_1 = L – 0.45 mm

Drilled hole pattern for panel mounting

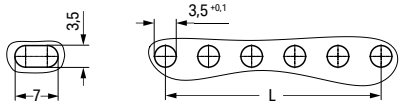

Even pole number: L = (pole no. – 2) x pin spacing
Odd pole number: L = (pole no. – 1) x pin spacing

PU = packaging unit; SPU = subpackaging unit; Dimensions in mm

Variants:
- Other pole numbers
- Gold-plated or partially gold-plated contact surfaces
- Other versions (or variants) can be requested from WAGO Sales or configured at https://configurator.wago.com/.

1-conductor male connector ▸ *MCS* MINI ▸ 734 Series

Pin spacing: 3.5 mm / 0.138 inches ▸ Actuation type: Operating tool ▸ CAGE CLAMP® ▸ Color: light gray

Mounting type: Feed-through mounting; Panel mounting ▸ Mounting type: Mounting flange

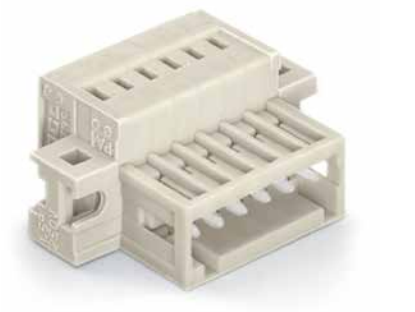

734-306/019-000

Pole number	Item No.	PU
2	**734-302/019-000**	100
3	**734-303/019-000**	100
4	**734-304/019-000**	50
5	**734-305/019-000**	50
6	**734-306/019-000**	50
7	**734-307/019-000**	50
8	**734-308/019-000**	50
9	**734-309/019-000**	50
10	**734-310/019-000**	50
11	**734-311/019-000**	25
12	**734-312/019-000**	25
13	**734-313/019-000**	25
14	**734-314/019-000**	25
16	**734-316/019-000**	25
18	**734-318/019-000**	25
20	**734-320/019-000**	25
24	**734-324/019-000**	10

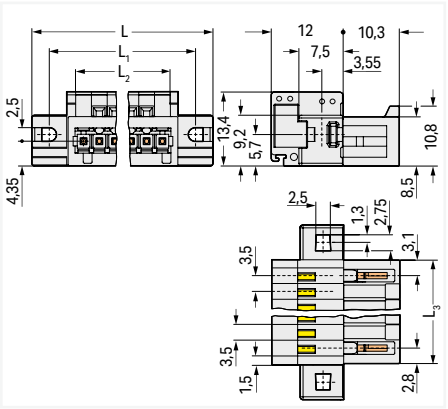

L = (pole no. x pin spacing) + 14.8 mm
L_1 = (pole no. x pin spacing) + 8.8 mm
L_2 = pole no. x pin spacing
L_3 = (pole no. – 1) x pin spacing + 5.9 mm

PU = packaging unit; SPU = subpackaging unit; Dimensions in mm

Variants:
- Other pole numbers
- Gold-plated or partially gold-plated contact surfaces
- Other versions (or variants) can be requested from WAGO Sales or configured at https://configurator.wago.com/.

2-conductor combi strip ▸ *MCS* MINI ▸ 734 Series

Pin spacing: 3.5 mm / 0.138 inches ▸ Actuation type: Operating tool ▸ CAGE CLAMP® ▸ Color: light gray

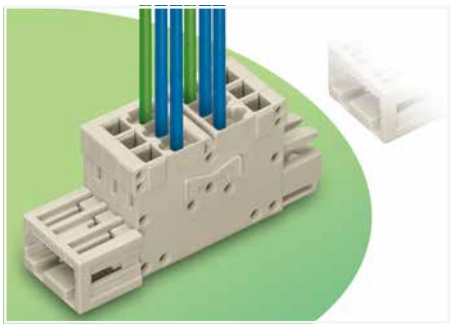

- Universal connection for all conductor types
- 2-conductor strips combine pin and socket connections
- Multiply potentials
- Strain relief plates for factory and field assembly
- Supply via pin-contact side
- Combi strips may be connected to multiply outputs
- 100% protected against mismating
- Coding option available

5

Electrical data				
Ratings per	**IEC/EN 60664-1**			
Overvoltage category	III	III	II	
Pollution degree	3	2	2	
Nominal voltage	160 V	160 V	320 V	
Rated impulse withstand voltage	2.5 kV	2.5 kV	2.5 kV	
Rated current	10 A	10 A	10 A	
Approvals per	**UL 1059**			
Use group	B	C	D	
Rated voltage	300 V	-	300 V	
Rated current	10 A	-	10 A	
Approvals per	**CSA**			
Use group	B	C	D	
Rated voltage	300 V	-	300 V	
Rated current	10 A	-	10 A	

Connection Data	
Connection technology	CAGE CLAMP®
Strip length	6 … 7 mm / 0.24 … 0.28 inches
Solid conductor	0.08 … 1.5 mm² / 28 … 14 AWG
Fine-stranded conductor	0.08 … 1.5 mm² / 28 … 14 AWG
Fine-stranded conductor; with insulated ferrule	0.25 … 1.5 mm²
Fine-stranded conductor; with uninsulated ferrule	0.25 … 1.5 mm²
Note (conductor cross-section)	Terminating 1.5 mm² conductors is possible; however insulation diameter does not allow clamping units to be terminated in a row.

Material data	
Material group	I
Insulation material (main housing)	Polyamide (PA66)
Flammability class per UL94	V0
Clamping spring material	Chrome-nickel spring steel (CrNi)
Contact material	Copper alloy
Contact Plating	Tin

Environmental requirements	
Limit temperature range	-60 … +100 °C
Processing temperature	-35 … +60 °C

Note:
The *MCS – MULTI CONNECTION SYSTEM* includes connectors without breaking capacity in accordance with DIN EN 61984. When used as intended, these connectors must not be connected/disconnected when live or under load.When used as intended, these connectors must not be connected/disconnected when live or under load. The circuit design should ensure header pins, which can be touched, are not live when unmated.

Coding	Page 497
Cover	Page 498
Ferrule	Page 1081
Installation	Page 501
Marking	Page 1066
Strain relief	Page 506
Test and measurement	Page 1088
Direct marking	Page 492
See technical section for further information	
Approvals and corresponding ratings, visit www.wago.com	

2-conductor combi strip ▸ *MCS* MINI ▸ 734 Series

Pin spacing: 3.5 mm / 0.138 inches ▸ Actuation type: Operating tool ▸ CAGE CLAMP® ▸ Color: light gray

Locking of plug-in connection: Locking lever



734-364

Pole number	Item No.	PU
2	734-362	100
3	734-363	50
4	734-364	50
5	734-365	50
6	734-366	50
7	734-367	25
8	734-368	25
9	734-369	25
10	734-370	25
11	734-371	25
12	734-372	25

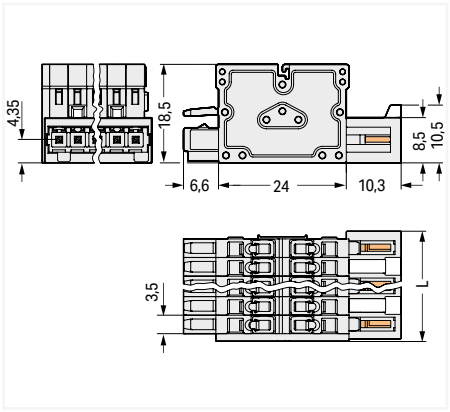

L = (pole no. – 1) x pin spacing + 5.9 mm + 0.45 mm



734-364/037-000

Pole number	Item No.	PU
2	734-362/037-000	50
3	734-363/037-000	50
4	734-364/037-000	50
5	734-365/037-000	50
6	734-366/037-000	25
7	734-367/037-000	25
8	734-368/037-000	25
9	734-369/037-000	25
10	734-370/037-000	25
11	734-371/037-000	25
12	734-372/037-000	25

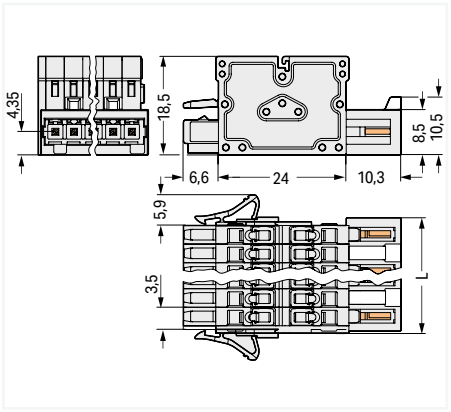

L = (pole no. – 1) x pin spacing + 5.9 mm + 0.45 mm

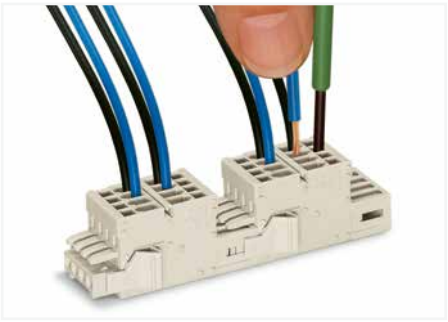

2-conductor combi strips with locking levers for multiplying potentials

PU = packaging unit; SPU = subpackaging unit; Dimensions in mm

Variants:

- Other pole numbers
- Other versions (or variants) can be requested from WAGO Sales or configured at https://configurator.wago.com/.

2-conductor combi strip ▸ *MCS* MINI ▸ 734 Series

Pin spacing: 3.5 mm / 0.138 inches ▸ Actuation type: Operating tool ▸ CAGE CLAMP® ▸ Color: light gray

Mounting type: Panel mounting ▸ Mounting type: Snap-in foot



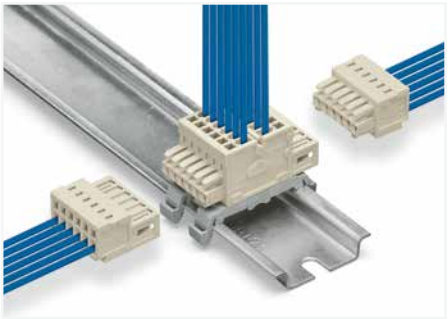

2-conductor combi strip with snap-in mounting feet using two DIN-35 rail mounting adapters (209-137) for 3 or more poles; distance between two mounting adapters: maximum 7 poles

734-366/008-000

Pole number	Item No.	PU
2	**734-362/008-000**	100
3	**734-363/008-000**	50
4	**734-364/008-000**	50
5	**734-365/008-000**	50
6	**734-366/008-000**	50
7	**734-367/008-000**	50
8	**734-368/008-000**	50
9	**734-369/008-000**	25
10	**734-370/008-000**	25
11	**734-371/008-000**	25
12	**734-372/008-000**	25

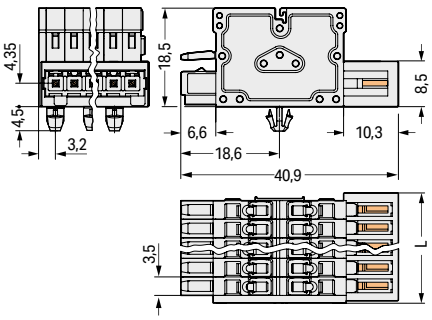

L = (pole no. – 1) x pin spacing + 5.9 mm + 0.45 mm

Drilled hole pattern for panel mounting

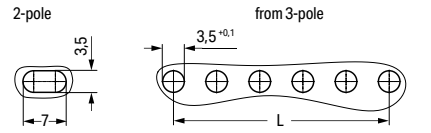

Even pole number: L = (pole no. – 2) x pin spacing
Odd pole number: L = (pole no. – 1) x pin spacing

PU = packaging unit; SPU = subpackaging unit; Dimensions in mm

Variants:
- Other pole numbers
- Other versions (or variants) can be requested from WAGO Sales or configured at https://configurator.wago.com/.

THT female header ▸ *MCS* MINI ▸ 734 Series

Pin spacing: 3.5 mm / 0.138 inches ▸ Solder pin length: 3.8 mm ▸ Color: light gray

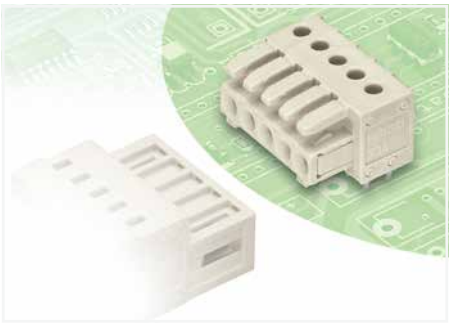

- Horizontal or vertical PCB mounting via straight or angled solder pins
- Integrated test ports for 2 mm Ø test plugs
- For board-to-board and board-to-wire connections
- Touch-proof PCB outputs
- Easy-to-identify inputs and outputs
- 100% protected against mismating
- Coding option available

Derating Curve
THT female header (734-532) with
1-conductor male connector (734-302)
Pin spacing: 3.5 mm / Conductor cross-section: 1.5 mm² "f-st"
Based on: EN 60512-5-2 / Reduction factor: 0.8

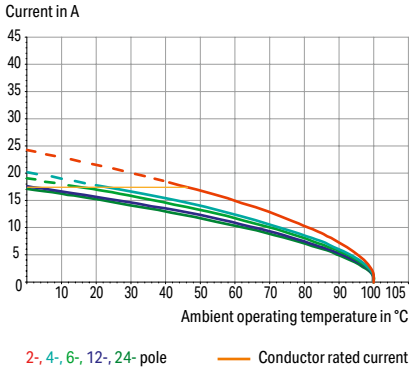

Electrical data			
Ratings per	**IEC/EN 60664-1**		
Overvoltage category	III	III	II
Pollution degree	3	2	2
Nominal voltage	160 V	160 V	320 V
Rated impulse withstand voltage	2.5 kV	2.5 kV	2.5 kV
Rated current	10 A	10 A	10 A
Approvals per	**UL 1059**		
Use group	B	C	D
Rated voltage	300 V	-	300 V
Rated current	10 A	-	10 A
Approvals per	**CSA**		
Use group	B	C	D
Rated voltage	300 V	-	300 V
Rated current	10 A	-	10 A

Material data	
Material group	I
Insulation material (main housing)	Polyamide (PA66)
Flammability class per UL94	V0
Contact material	Copper alloy
Contact Plating	Tin

Mechanical data	
Solder pin arrangement	over the entire female connector (in-line)
Number of solder pins per potential	1
Solder pin length	3.8 mm
Solder pin dimensions	0.9 x 0.9 mm
Drilled hole diameter	1.4 $^{(+0.1)}$ mm

Environmental requirements	
Limit temperature range	-60 … +100 °C
Processing temperature	-35 … +60 °C

Note:
The *MCS – MULTI CONNECTION SYSTEM* includes connectors without breaking capacity in accordance with DIN EN 61984. When used as intended, these connectors must not be connected/disconnected when live or under load.When used as intended, these connectors must not be connected/disconnected when live or under load. The circuit design should ensure header pins, which can be touched, are not live when unmated.

See technical section for further information

Approvals and corresponding ratings, visit www.wago.com

THT female header ▸ *MCS* MINI ▸ 734 Series

Pin spacing: 3.5 mm / 0.138 inches ▸ Solder pin length: 3.8 mm ▸ Color: light gray

Mating direction to the PCB: 0 °



734-536

Pole number	Item No.	PU
2	734-532	200
3	734-533	200
4	734-534	100
5	734-535	100
6	734-536	100
7	734-537	50
8	734-538	50
9	734-539	50
10	734-540	50
11	734-541	50
12	734-542	50
13	734-543	50
14	734-544	50
16	734-546	25
18	734-548	25
20	734-550	25
24	734-554	25

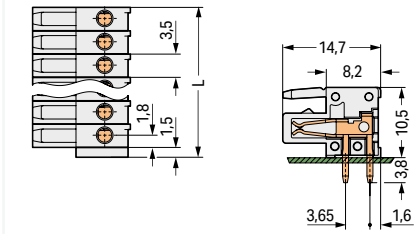

L = (pole no. x pin spacing) + 1.5 mm

Mating direction to the PCB: 90 °



734-466

Pole number	Item No.	PU
2	734-462	200
3	734-463	200
4	734-464	100
5	734-465	100
6	734-466	100
7	734-467	50
8	734-468	50
9	734-469	50
10	734-470	50
11	734-471	50
12	734-472	50
13	734-473	50
14	734-474	50
16	734-476	25
18	734-478	25
20	734-480	25
24	734-484	25

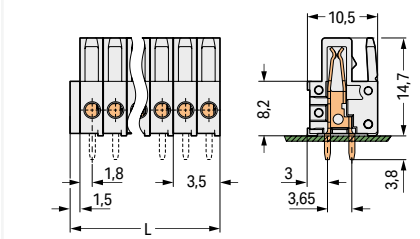

L = (pole no. x pin spacing) + 1.5 mm

Locking of plug-in connection: Locking lever ▸ Mating direction to the PCB: 0 °



734-536/037-000

Pole number	Item No.	PU
2	734-532/037-000	100
3	734-533/037-000	100
4	734-534/037-000	100
5	734-535/037-000	50
6	734-536/037-000	50
7	734-537/037-000	50
8	734-538/037-000	50
9	734-539/037-000	50
10	734-540/037-000	50
11	734-541/037-000	50
12	734-542/037-000	50
13	734-543/037-000	25
14	734-544/037-000	25
16	734-546/037-000	25
18	734-548/037-000	25
20	734-550/037-000	25
24	734-554/037-000	10

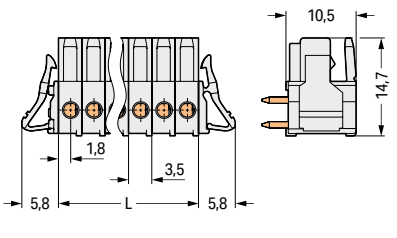

L = pole no. x pin spacing

PU = packaging unit; SPU = subpackaging unit; Dimensions in mm

Variants:

- Other pole numbers
- Gold-plated or partially gold-plated contact surfaces
- Other versions (or variants) can be requested from WAGO Sales or configured at https://configurator.wago.com/.

THT female header ▸ *MCS* MINI ▸ 734 Series

Pin spacing: 3.5 mm / 0.138 inches ▸ Solder pin length: 3.8 mm ▸ Color: light gray

Locking of plug-in connection: Locking lever ▸ Mating direction to the PCB: 90 °



734-466/037-000

Pole number	Item No.	PU
2	**734-462/037-000**	100
3	**734-463/037-000**	100
4	**734-464/037-000**	100
5	**734-465/037-000**	50
6	**734-466/037-000**	50
7	**734-467/037-000**	50
8	**734-468/037-000**	50
9	**734-469/037-000**	50
10	**734-470/037-000**	50
11	**734-471/037-000**	50
12	**734-472/037-000**	50
13	**734-473/037-000**	25
14	**734-474/037-000**	25
16	**734-476/037-000**	25
18	**734-478/037-000**	25
20	**734-480/037-000**	25
24	**734-484/037-000**	10

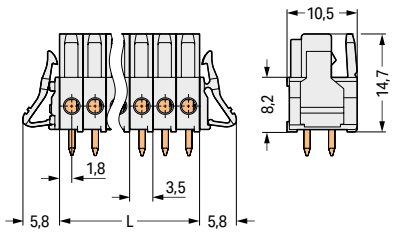

L = pole no. x pin spacing

PU = packaging unit; SPU = subpackaging unit; Dimensions in mm

Variants:
- Other pole numbers
- Gold-plated or partially gold-plated contact surfaces
- Other versions (or variants) can be requested from WAGO Sales or configured at https://configurator.wago.com/.

THT male header ▸ *MCS* MINI ▸ 734 Series

Pin spacing: 3.5 mm / 0.138 inches ▸ Color: light gray

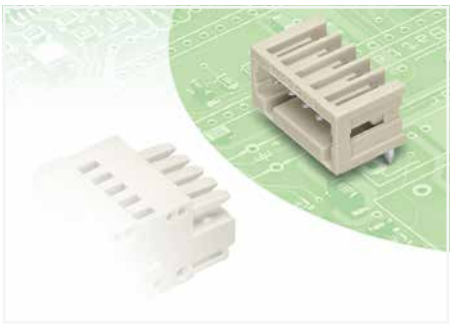

- Horizontal or vertical PCB mounting via straight or angled solder pins
- 100% protected against mismating; only mating halves with the same number of poles can be connected together
- Coding option available

Derating Curve
1-conductor female connector (734-102) with
THT male header (734-162)
Pin spacing: 3.5 mm / Conductor cross-section: 1.5 mm² "f-st"
Based on: EN 60512-5-2 / Reduction factor: 0.8

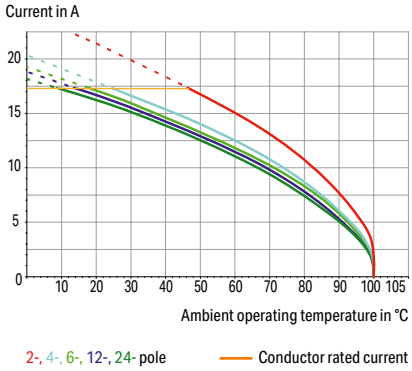

Electrical data			
Ratings per	**IEC/EN 60664-1**		
Overvoltage category	III	III	II
Pollution degree	3	2	2
Nominal voltage	160 V	160 V	320 V
Rated impulse withstand voltage	2.5 kV	2.5 kV	2.5 kV
Rated current	10 A	10 A	10 A
Approvals per	**UL 1059**		
Use group	B	C	D
Rated voltage	300 V	-	300 V
Rated current	10 A	-	10 A
Approvals per	**CSA**		
Use group	B	C	D
Rated voltage	300 V	-	300 V
Rated current	10 A	-	10 A

Material data	
Material group	I
Insulation material (main housing)	Polyamide (PA66)
Flammability class per UL94	V0
Contact material	Electrolytic copper (E_{Cu})
Contact Plating	Tin

Mechanical data	
Solder pin arrangement	over the entire male connector (in-line)
Number of solder pins per potential	1
Solder pin dimensions	1 x 1 mm
Drilled hole diameter	1.4 $^{(+0.1)}$ mm

Environmental requirements	
Limit temperature range	-60 … +100 °C
Processing temperature	-35 … +60 °C

Note:
The *MCS – MULTI CONNECTION SYSTEM* includes connectors without breaking capacity in accordance with DIN EN 61984. When used as intended, these connectors must not be connected/disconnected when live or under load.When used as intended, these connectors must not be connected/disconnected when live or under load. The circuit design should ensure header pins, which can be touched, are not live when unmated.

Coding Page 497

See technical section for further information

Approvals and corresponding ratings, visit www.wago.com

THT male header ▸ *MCS* MINI ▸ 734 Series

Pin spacing: 3.5 mm / 0.138 inches ▸ Color: light gray

Mating direction to the PCB: 0 ° ▸ Solder pin length: 3.8 mm



734-166

Pole number	Item No.	PU
2	734-162	200
3	734-163	200
4	734-164	200
5	734-165	200
6	734-166	100
7	734-167	100
8	734-168	100
9	734-169	100
10	734-170	100
11	734-171	100
12	734-172	100
13	734-173	100
14	734-174	50
16	734-176	50
18	734-178	50
20	734-180	50
24	734-184	50

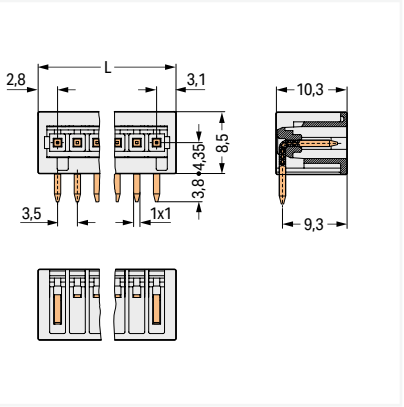

L = (pole no. – 1) x pin spacing + 5.9 mm

Mating direction to the PCB: 90 ° ▸ Solder pin length: 4.5 mm



734-136

Pole number	Item No.	PU
2	734-132	200
3	734-133	200
4	734-134	200
5	734-135	200
6	734-136	100
7	734-137	100
8	734-138	100
9	734-139	100
10	734-140	100
11	734-141	100
12	734-142	100
13	734-143	100
14	734-144	100
16	734-146	50
18	734-148	50
20	734-150	50
24	734-154	50

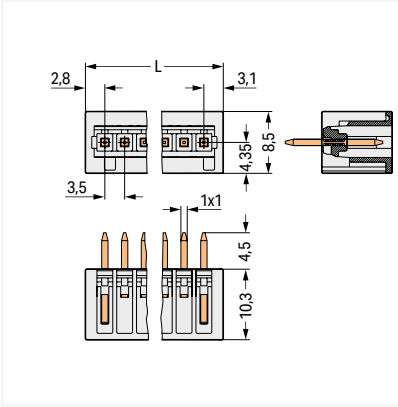

L = (pole no. – 1) x pin spacing + 5.9 mm

Double-deck ▸ Mating direction to the PCB: 0 ° ▸ Solder pin length: 3.6 mm



734-406

Pole number	Item No.	PU
4	734-402	100
6	734-403	100
8	734-404	100
10	734-405	100
12	734-406	100
14	734-407	50
16	734-408	50
18	734-409	50
20	734-410	50
24	734-412	50

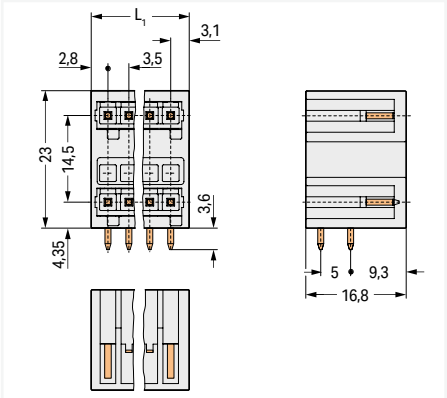

L_1 = (pole no./2 – 1) x pin spacing + 5.9 mm

5

PU = packaging unit; SPU = subpackaging unit; Dimensions in mm

Variants:

- Other pole numbers
- 3.8 mm pin projection for male headers with straight solder pins
- Gold-plated or partially gold-plated contact surfaces
- Other versions (or variants) can be requested from WAGO Sales or configured at https://configurator.wago.com/.

THT male header ▸ *MCS* MINI ▸ 734 Series

Pin spacing: 3.5 mm / 0.138 inches ▸ Color: light gray

Double-deck with support ▸ Mating direction to the PCB: 0 ° ▸ Solder pin length: 3.6 mm

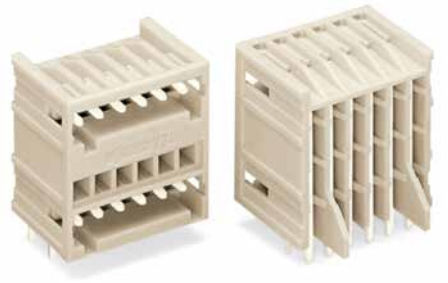

734-406/001-000

Pole number	Item No.	PU
4	734-402/001-000	100
6	734-403/001-000	100
8	734-404/001-000	100
10	734-405/001-000	100
12	734-406/001-000	50
14	734-407/001-000	50
16	734-408/001-000	50
18	734-409/001-000	50
20	734-410/001-000	50
24	734-412/001-000	50

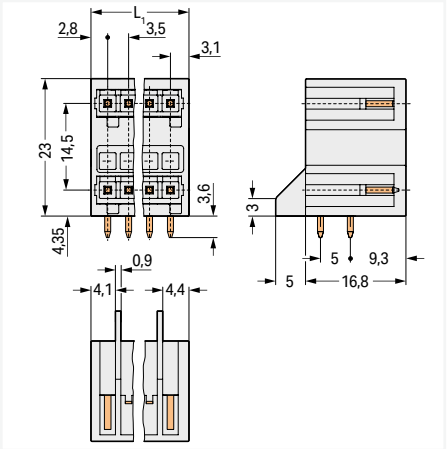

L_1 = (pole no./2 – 1) x pin spacing + 5.9 mm

Locking of plug-in connection: Threaded flange ▸ Mating direction to the PCB: 0 ° ▸ Solder pin length: 3.8 mm

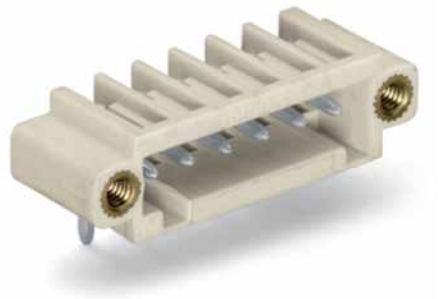

734-166/108-000

Pole number	Item No.	PU
2	734-162/108-000	200
3	734-163/108-000	200
4	734-164/108-000	200
5	734-165/108-000	200
6	734-166/108-000	100
7	734-167/108-000	100
8	734-168/108-000	100
9	734-169/108-000	100
10	734-170/108-000	100
11	734-171/108-000	100
12	734-172/108-000	100
13	734-173/108-000	100
14	734-174/108-000	50
16	734-176/108-000	50
18	734-178/108-000	50
20	734-180/108-000	50
24	734-184/108-000	50

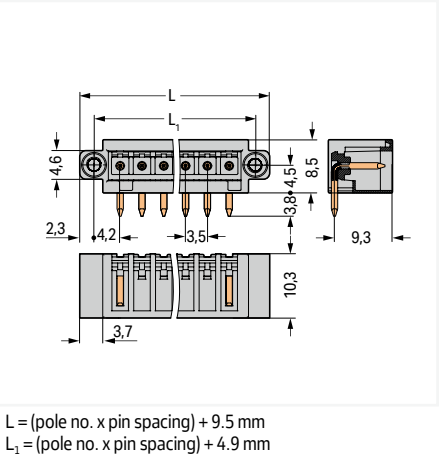

L = (pole no. x pin spacing) + 9.5 mm
L_1 = (pole no. x pin spacing) + 4.9 mm

Locking of plug-in connection: Threaded flange ▸ Mating direction to the PCB: 90 ° ▸ Solder pin length: 4.5 mm



734-136/108-000

Pole number	Item No.	PU
2	734-132/108-000	200
3	734-133/108-000	200
4	734-134/108-000	200
5	734-135/108-000	100
6	734-136/108-000	100
7	734-137/108-000	100
8	734-138/108-000	100
9	734-139/108-000	100
10	734-140/108-000	100
11	734-141/108-000	100
12	734-142/108-000	100
13	734-143/108-000	50
14	734-144/108-000	50
16	734-146/108-000	50
18	734-148/108-000	50
20	734-150/108-000	50
24	734-154/108-000	50

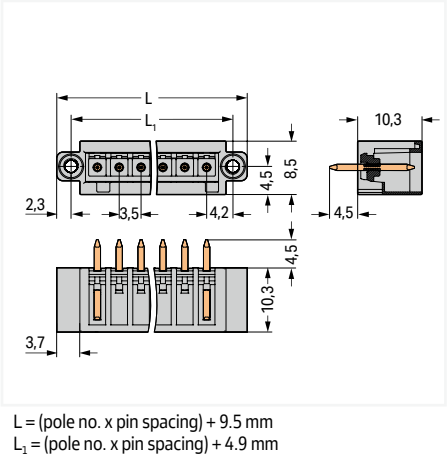

L = (pole no. x pin spacing) + 9.5 mm
L_1 = (pole no. x pin spacing) + 4.9 mm

PU = packaging unit; SPU = subpackaging unit; Dimensions in mm

Variants:
- Other pole numbers
- 3.8 mm pin projection for male headers with straight solder pins
- Gold-plated or partially gold-plated contact surfaces
- Other versions (or variants) can be requested from WAGO Sales or configured at https://configurator.wago.com/.

THR (Through-Hole Reflow) Soldering Process



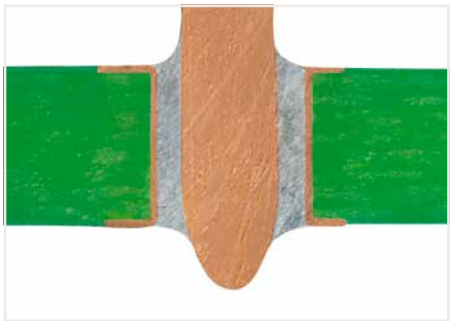

By using high-temperature-resistant plastic and a streamlined pin design, WAGO's THR male headers and PCB terminal blocks meet requirements for SMT process capability while maintaining the necessary stability. Both headers and terminal blocks are simply pushed into the solder paste-filled PCB holes and then soldered along with the SMT components via reflow soldering. The previous wave soldering process is no longer necessary. The result is a perfect connection – both mechanically and electrically.



Terminal strips with an additional suction pad in tape-and-reel packaging per IEC 60286-3
WAGO recommends both a temperature profile that adheres to EN 61760-1 and the use of forced convection ovens for processing THR components.

5

1

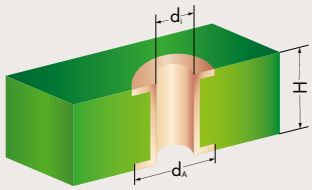

Metal-plated PCB bore hole

2

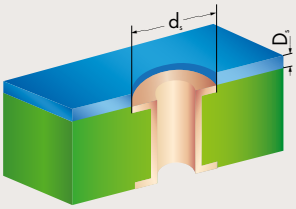

SMD positioning pattern

3

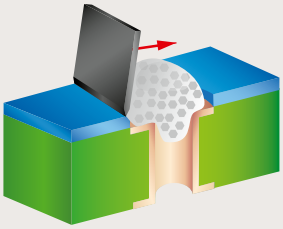

Solder paste application

Series	d_i (mm)	d_A (mm)	H (mm)	d_s (mm)	D_s (µm)	d (mm)	L (mm)
218	$1.1^{+0.1}$	1.9	< 2	1.8	150	0.9	2.8
231 (1 x 1 mm)	$1.4^{+0.1}$	2.5	< 2	2.4	150	1.2	2.4
231 (1.2 x 1.2 mm)	$1.7^{+0.1}$	2.8	< 2	2.7	150	1.5	2.4
236	$1.1^{+0.1}$	2.2	< 2	2.1	150	0.9	3.6
250	$1.1^{+0.1}$	2.0	< 2	1.9	150	0.9	2.4
713	$1.0^{+0.1}$	1.9	< 2	1.8	150	1.0	2.4
733	$1.2^{+0.1}$	1.9	< 2	1.8	150	1.0	2.4
734	$1.4^{+0.1}$	2.5	< 2	2.4	150	1.2	2.4
2060	$1.5^{+0.1}$	2.4	< 2	2.3	150	1.25	2.4
2061	$1.5^{+0.1}$	2.4	< 2	2.3	150	1.25	1.5 / 2.4
2086	$1.0^{+0.1}$	2.0	< 2	1.9	150	0.85	1.5 / 2.4

d_i: Plated through-hole diameter
d_A: Outer diameter of metal-plated PCB hole*
H: PCB thickness
d_s: Pattern hole diameter
D_s: Pattern thickness
d: Pin diagonal
L: Pin length

* When laying out the metal-plated bore holes, the clearance and creepage distance requirements – as specified in the equipment standards – must be considered.

Solder pin form

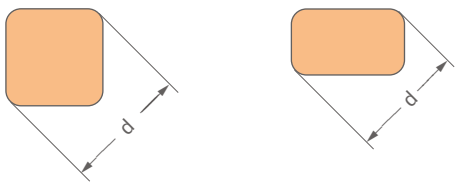

4

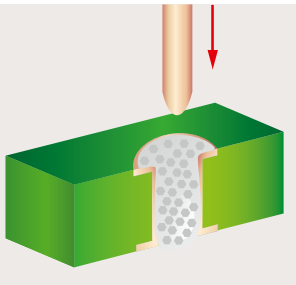

Component assembly, automatic/by hand

5

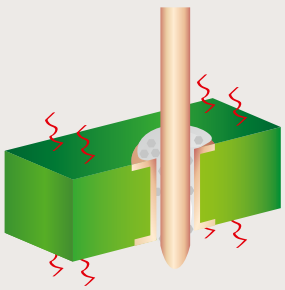

Reflow soldering process

6

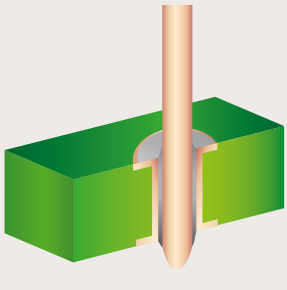

THR soldering joint

THR male header ▸ *MCS* MINI ▸ 734 Series

Pin spacing: 3.5 mm / 0.138 inches ▸ Color: black

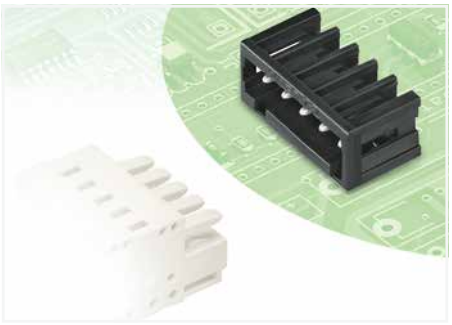

- THR male headers for reflow soldering in SMT applications
- Available in tape-and-reel packaging for automated pick-and-place PCB assembly
- Optimal thermal penetration via pin enclosure design provides lower soldering temperatures
- 100% protected against mismating
- Coding via coding fingers

5

Derating Curve
1-conductor female connector (734-102) with
THR male header (734-132/105-604)
Pin spacing: 3.5 mm / Conductor cross-section: 1.5 mm² "f-st"
Based on: EN 60512-5-2 / Reduction factor: 0.8

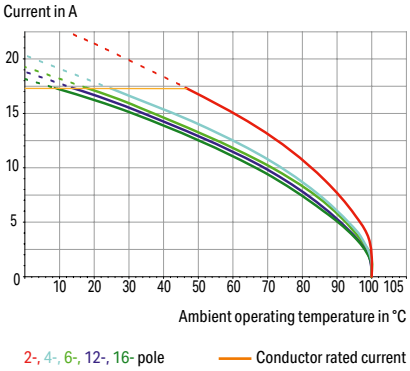

Electrical data			
Ratings per	**IEC/EN 60664-1**		
Overvoltage category	III	III	II
Pollution degree	3	2	2
Nominal voltage	160 V	160 V	320 V
Rated impulse withstand voltage	2.5 kV	2.5 kV	2.5 kV
Rated current	10 A	10 A	10 A
Approvals per	**UL 1059**		
Use group	B	C	D
Rated voltage	300 V	-	300 V
Rated current	10 A	-	10 A
Approvals per	**CSA**		
Use group	B	C	D
Rated voltage	300 V	-	300 V
Rated current	10 A	-	10 A

Material data	
Material group	I
Insulation material (main housing)	Polyphthalamide (PPA GF)
Flammability class per UL94	V0
Contact material	Electrolytic copper (E_{Cu})
Contact Plating	Tin

Mechanical data	
Solder pin arrangement	over the entire male connector (in-line)
Number of solder pins per potential	1
Solder pin length	2.4 mm
Solder pin dimensions	1 x 1 mm
Plated through-hole diameter (THR)	1.4 $^{(+0.1)}$ mm

Environmental requirements	
Limit temperature range	-60 … +100 °C
Processing temperature	-35 … +60 °C

Note:
The *MCS – MULTI CONNECTION SYSTEM* includes connectors without breaking capacity in accordance with DIN EN 61984. When used as intended, these connectors must not be connected/disconnected when live or under load.When used as intended, these connectors must not be connected/disconnected when live or under load. The circuit design should ensure header pins, which can be touched, are not live when unmated.

THR soldering	Page 466
Coding	Page 497
See technical section for further information	
Approvals and corresponding ratings, visit www.wago.com	

THR male header ▸ *MCS* MINI ▸ 734 Series

Pin spacing: 3.5 mm / 0.138 inches ▸ Color: black

Mating direction to the PCB: 0 °

Suitable for automated assembly



734-170/105-604

Pole number	Item No.	PU
2	734-162/105-604	200
3	734-163/105-604	200
4	734-164/105-604	200
5	734-165/105-604	200
6	734-166/105-604	100
7	734-167/105-604	100
8	734-168/105-604	100
9	734-169/105-604	100
10	734-170/105-604	100
11	734-171/105-604	100
12	734-172/105-604	100
14	734-174/105-604	100
16	734-176/105-604	50



734-170/105-604/997-407

Pole number	Tape width	Item No.	PU
2	32 mm	734-162/105-604/997-405	280
3	32 mm	734-163/105-604/997-405	280
4	32 mm	734-164/105-604/997-405	280
5	32 mm	734-165/105-604/997-405	280
6	56 mm	734-166/105-604/997-407	280
7	56 mm	734-167/105-604/997-407	280
8	56 mm	734-168/105-604/997-407	280
9	56 mm	734-169/105-604/997-407	280
10	56 mm	734-170/105-604/997-407	280
11	56 mm	734-171/105-604/997-407	280
12	56 mm	734-172/105-604/997-407	280
14	72 mm	734-174/105-604/997-408	280
16	72 mm	734-176/105-604/997-408	280

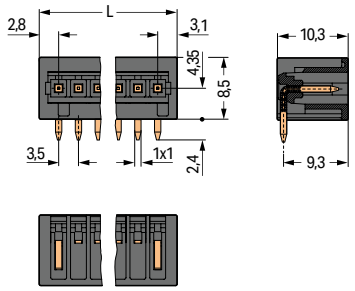

L = (pole no. – 1) x pin spacing + 5.9 mm

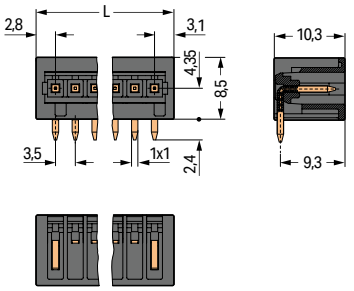

L = (pole no. – 1) x pin spacing + 5.9 mm

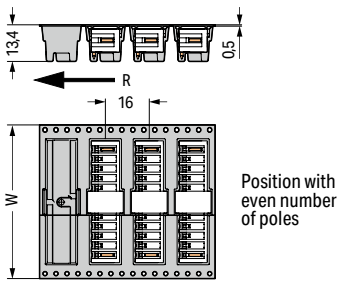

W = tape width
R = feed direction

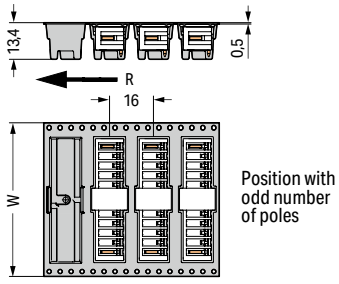

W = tape width
R = feed direction

PU = packaging unit; SPU = subpackaging unit; Dimensions in mm

Variants:

- Other pole numbers
- Other solder pin lengths
- Gold-plated or partially gold-plated contact surfaces
- Other versions (or variants) can be requested from WAGO Sales or configured at https://configurator.wago.com/.

THR male header ▸ *MCS* MINI ▸ 734 Series

Pin spacing: 3.5 mm / 0.138 inches ▸ Color: black

Mating direction to the PCB: 90 °

Suitable for automated assembly



734-140/105-604

Pole number	Item No.	PU
2	734-132/105-604	200
3	734-133/105-604	200
4	734-134/105-604	200
5	734-135/105-604	200
6	734-136/105-604	100
7	734-137/105-604	100
8	734-138/105-604	100
9	734-139/105-604	100
10	734-140/105-604	100
11	734-141/105-604	100
12	734-142/105-604	100
14	734-144/105-604	100
16	734-146/105-604	50

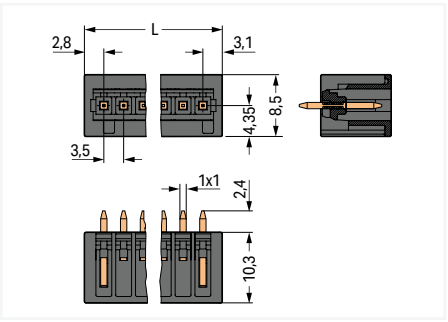

L = (pole no. – 1) x pin spacing + 5.9 mm



734-140/105-604/997-407

Pole number	Tape width	Item No.	PU
2	32 mm	734-132/105-604/997-405	200
3	32 mm	734-133/105-604/997-405	200
4	32 mm	734-134/105-604/997-405	200
5	32 mm	734-135/105-604/997-405	200
6	56 mm	734-136/105-604/997-407	200
7	56 mm	734-137/105-604/997-407	200
8	56 mm	734-138/105-604/997-407	200
9	56 mm	734-139/105-604/997-407	200
10	56 mm	734-140/105-604/997-407	200
11	56 mm	734-141/105-604/997-407	200
12	56 mm	734-142/105-604/997-407	200
14	72 mm	734-144/105-604/997-408	200
16	72 mm	734-146/105-604/997-408	200

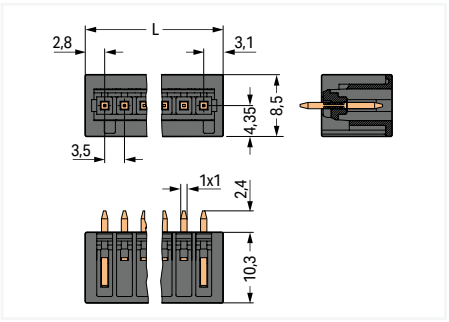

L = (pole no. – 1) x pin spacing + 5.9 mm

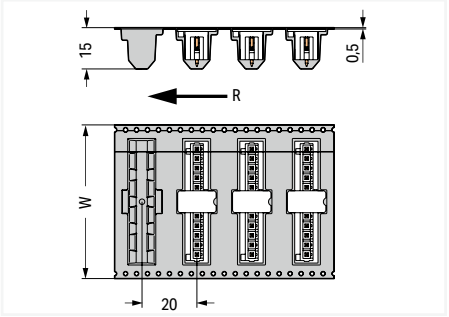

W = tape width
R = feed direction

PU = packaging unit; SPU = subpackaging unit; Dimensions in mm

Variants:
- Other pole numbers
- Other solder pin lengths
- Gold-plated or partially gold-plated contact surfaces
- Other versions (or variants) can be requested from WAGO Sales or configured at https://configurator.wago.com/.

1-conductor female connector ▸ *MCS* MINI ▸ 734 Series

Pin spacing: 3.81 mm / 0.15 inches ▸ Actuation type: Operating tool ▸ CAGE CLAMP® ▸ Color: orange

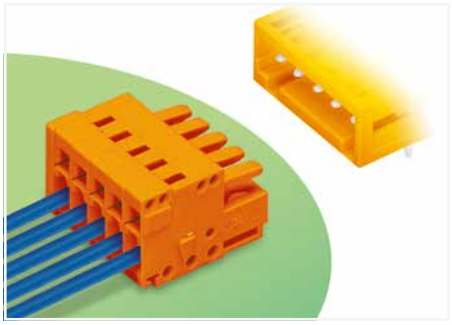

- Universal connection for all conductor types
- Easy cable pre-assembly and on-unit wiring via vertical and horizontal CAGE CLAMP® actuation
- Strain relief plates and housings for field assembly
- 100% protected against mismating
- Coding option available

5

Derating Curve
1-conductor female connector (734-102) with
THT male header (734-132)
Pin spacing: 3.5 mm / Conductor cross-section: 1.5 mm² "f-st"
Based on: EN 60512-5-2 / Reduction factor: 0.8

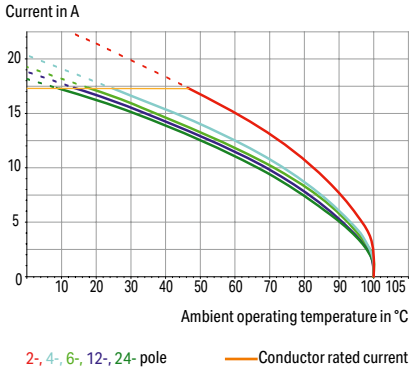

Electrical data			
Ratings per	**IEC/EN 60664-1**		
Overvoltage category	III	III	II
Pollution degree	3	2	2
Nominal voltage	160 V	160 V	320 V
Rated impulse withstand voltage	2.5 kV	2.5 kV	2.5 kV
Rated current	10 A	10 A	10 A
Approvals per	**UL 1059**		
Use group	B	C	D
Rated voltage	300 V	-	300 V
Rated current	10 A	-	10 A
Approvals per	**CSA**		
Use group	B	C	D
Rated voltage	300 V	-	300 V
Rated current	10 A	-	10 A

Connection Data	
Connection technology	CAGE CLAMP®
Strip length	6 … 7 mm / 0.24 … 0.28 inches
Solid conductor	0.08 … 1.5 mm² / 28 … 14 AWG
Fine-stranded conductor	0.08 … 1.5 mm² / 28 … 14 AWG
Fine-stranded conductor; with insulated ferrule	0.25 … 1.5 mm²
Fine-stranded conductor; with uninsulated ferrule	0.25 … 1.5 mm²
Note (conductor cross-section)	Terminating 1.5 mm² conductors is possible; however insulation diameter does not allow clamping units to be terminated in a row.

Material data	
Material group	I
Insulation material (main housing)	Polyamide (PA66)
Flammability class per UL94	V0
Clamping spring material	Chrome-nickel spring steel (CrNi)
Contact material	Copper alloy
Contact Plating	Tin

Environmental requirements	
Limit temperature range	-60 … +100 °C
Processing temperature	-35 … +60 °C

Note:
The *MCS – MULTI CONNECTION SYSTEM* includes connectors without breaking capacity in accordance with DIN EN 61984. When used as intended, these connectors must not be connected/disconnected when live or under load.When used as intended, these connectors must not be connected/disconnected when live or under load. The circuit design should ensure header pins, which can be touched, are not live when unmated.

Ferrule	Page 1081
Installation	Page 500
Insulation stop	Page 499
Marking	Page 1066
Strain relief	Page 496
Test and measurement	Page 1088
Tool	Page 496, 1072
Direct marking	Page 492
See technical section for further information	
Approvals and corresponding ratings, visit www.wago.com	

1-conductor female connector ▸ *MCS* MINI ▸ 734 Series

Pin spacing: 3.81 mm / 0.15 inches ▸ Actuation type: Operating tool ▸ CAGE CLAMP® ▸ Color: orange



734-206

Pole number	Item No.	PU
2	734-202	200
3	734-203	200
4	734-204	100
5	734-205	100
6	734-206	100
8	734-208	50
9	734-209	50
10	734-210	50
12	734-212	50
14	734-214	25
15	734-215	25
16	734-216	25
18	734-218	25
19	734-219	25
20	734-220	25

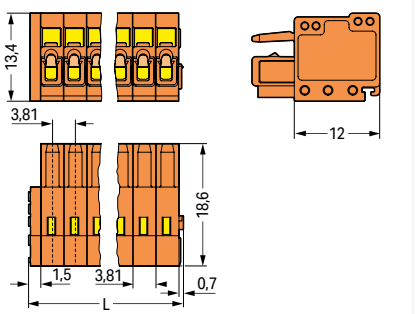

L = (pole no. x pin spacing) + 2.2 mm

Locking of plug-in connection: Locking lever



734-206/037-000

Pole number	Item No.	PU
2	734-202/037-000	100
3	734-203/037-000	100
4	734-204/037-000	100
5	734-205/037-000	50
6	734-206/037-000	50
8	734-208/037-000	50
9	734-209/037-000	50
10	734-210/037-000	50
12	734-212/037-000	25
14	734-214/037-000	25
15	734-215/037-000	25
16	734-216/037-000	25
18	734-218/037-000	25
19	734-219/037-000	25
20	734-220/037-000	25

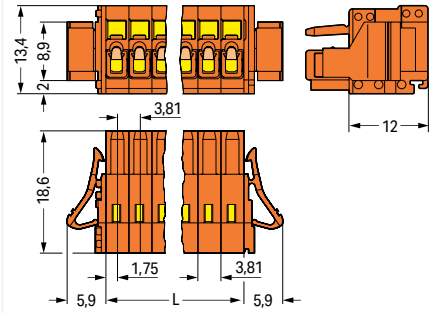

L = pole no. x pin spacing

Mounting type: Panel mounting ▸ Mounting type: Snap-in foot

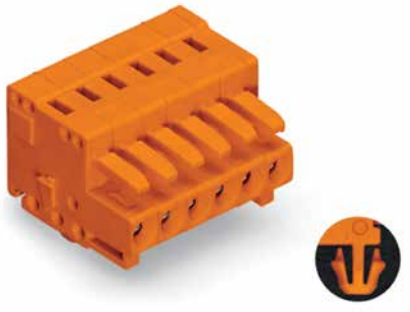

734-206/008-000

Pole number	Item No.	PU
2	734-202/008-000	200
3	734-203/008-000	200
4	734-204/008-000	100
5	734-205/008-000	100
6	734-206/008-000	100
8	734-208/008-000	50
9	734-209/008-000	50
10	734-210/008-000	50
12	734-212/008-000	50
14	734-214/008-000	50
15	734-215/008-000	25
16	734-216/008-000	25
18	734-218/008-000	25
19	734-219/008-000	25
20	734-220/008-000	25

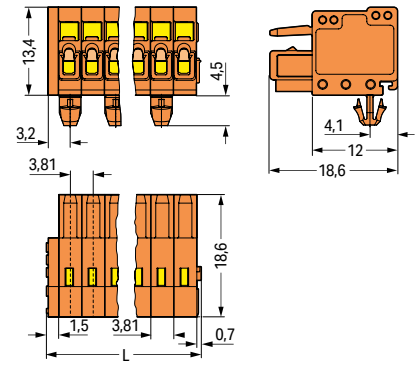

L = pole no. x pin spacing

Drilled hole pattern for panel mounting

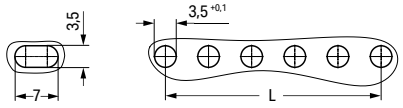

Even pole number: L = (pole no. – 2) x pin spacing
Odd pole number: L = (pole no. – 1) x pin spacing

PU = packaging unit; SPU = subpackaging unit; Dimensions in mm

Variants:
- Other pole numbers
- Gold-plated or partially gold-plated contact surfaces
- Other versions (or variants) can be requested from WAGO Sales or configured at https://configurator.wago.com/.

1-conductor female connector ▸ *MCS* MINI ▸ 2734 Series

Pin spacing: 3.81 mm / 0.15 inches ▸ Actuation type: Push-button ▸ Push-in CAGE CLAMP® ▸ Color: orange

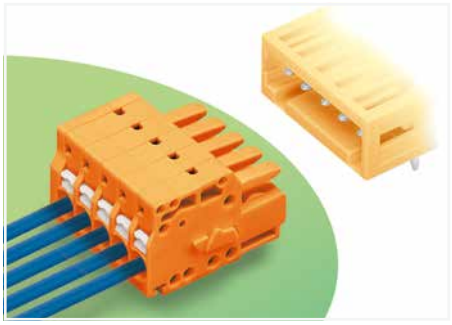

- Universal connection for all conductor types
- Easy-to-use design does not require specialty tools
- Ability to wire while mated
- Simple, push-in termination of solid and ferruled conductors
- Integrated test ports for testing parallel to the conductor entry
- 100% protected against mismating
- Coding option available

5

Derating Curve
1-conductor female connector (2734-102) with THT male header (734-132)
Pin spacing: 3.5 mm / Conductor cross-section: 1.5 mm² "f-st"
Based on: EN 60512-5-2 / Reduction factor: 0.8

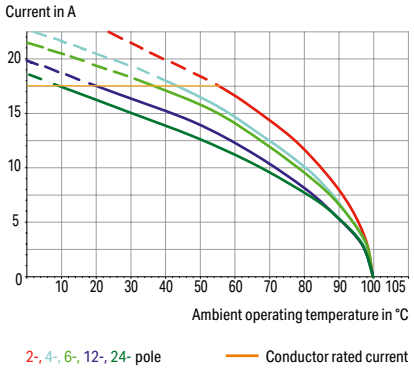

Electrical data			
Ratings per	**IEC/EN 60664-1**		
Overvoltage category	III	III	II
Pollution degree	3	2	2
Nominal voltage	160 V	160 V	320 V
Rated impulse withstand voltage	2.5 kV	2.5 kV	2.5 kV
Rated current	10 A	10 A	10 A
Approvals per	**UL 1059**		
Use group	B	C	D
Rated voltage	300 V	-	300 V
Rated current	10 A	-	10 A
Approvals per	**CSA**		
Use group	B	C	D
Rated voltage	300 V	-	300 V
Rated current	10 A	-	10 A

Connection Data	
Connection technology	Push-in CAGE CLAMP®
Strip length	8 … 9 mm / 0.31 … 0.35 inches
Solid conductor	0.2 … 1.5 mm² / 24 … 16 AWG
Fine-stranded conductor	0.2 … 1.5 mm² / 24 … 16 AWG
Fine-stranded conductor; with insulated ferrule	0.25 … 0.75 mm²
Fine-stranded conductor; with uninsulated ferrule	0.25 … 1.5 mm²

Material data	
Material group	I
Insulation material (main housing)	Polyamide (PA66)
Flammability class per UL94	V0
Clamping spring material	Chrome-nickel spring steel (CrNi)
Contact material	Copper alloy
Contact Plating	Tin

Environmental requirements	
Limit temperature range	-60 … +100 °C
Processing temperature	-35 … +60 °C

Note:
The *MCS – MULTI CONNECTION SYSTEM* includes connectors without breaking capacity in accordance with DIN EN 61984. When used as intended, these connectors must not be connected/disconnected when live or under load.When used as intended, these connectors must not be connected/disconnected when live or under load. The circuit design should ensure header pins, which can be touched, are not live when unmated.

Ferrule	Page 1081
Installation	Page 500, 1071
Strain relief	Page 507
Tool	Page 496, 1072
Direct marking	Page 492
Cutout dimensions	Page 494
See technical section for further information	
Approvals and corresponding ratings, visit www.wago.com	

1-conductor female connector ▸ *MCS* MINI ▸ 2734 Series

Pin spacing: 3.81 mm / 0.15 inches ▸ Actuation type: Push-button ▸ Push-in CAGE CLAMP® ▸ Color: orange

	Locking of plug-in connection: Locking lever	Mounting type: Feed-through mounting; Panel mounting ▸ Mounting type: Mounting flange





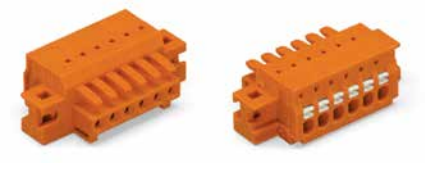

2734-206

Pole number	Item No.	PU
2	2734-202	200
3	2734-203	200
4	2734-204	100
5	2734-205	100
6	2734-206	100
8	2734-208	50
9	2734-209	50
10	2734-210	50
12	2734-212	25
14	2734-214	25
15	2734-215	25
16	2734-216	25
18	2734-218	25
19	2734-219	25
20	2734-220	25

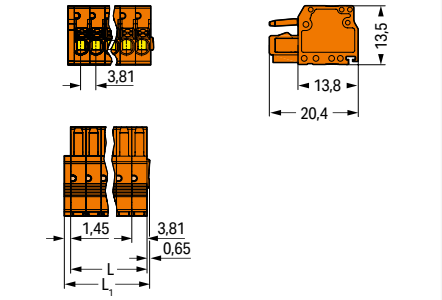

L = pole no. x pin spacing
L_1 = (pole no. x pin spacing) + 2.1 mm

2734-206/037-000

Pole number	Item No.	PU
2	2734-202/037-000	100
3	2734-203/037-000	100
4	2734-204/037-000	100
5	2734-205/037-000	50
6	2734-206/037-000	50
8	2734-208/037-000	50
9	2734-209/037-000	50
10	2734-210/037-000	50
12	2734-212/037-000	25
14	2734-214/037-000	25
15	2734-215/037-000	25
16	2734-216/037-000	25
18	2734-218/037-000	25
19	2734-219/037-000	25
20	2734-220/037-000	25

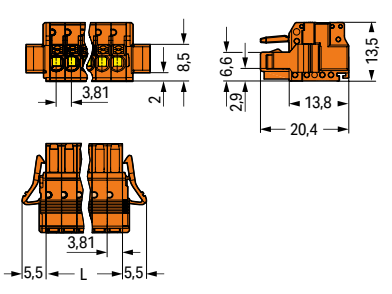

L = pole no. x pin spacing

2734-206/031-000

Pole number	Item No.	PU
2	2734-202/031-000	100
3	2734-203/031-000	100
4	2734-204/031-000	50
5	2734-205/031-000	50
6	2734-206/031-000	50
8	2734-208/031-000	50
9	2734-209/031-000	50
10	2734-210/031-000	50
12	2734-212/031-000	25
14	2734-214/031-000	25
16	2734-216/031-000	25
20	2734-220/031-000	25

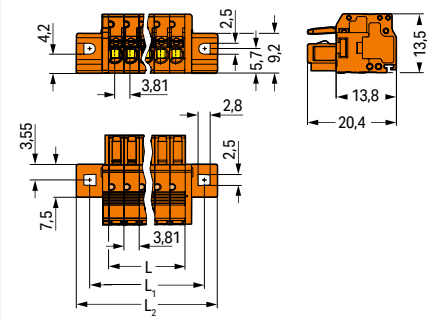

L = pole no. x pin spacing
L_1 = (pole no. x pin spacing) + 8.8 mm
L_2 = (pole no. x pin spacing) + 14.8 mm

PU = packaging unit; SPU = subpackaging unit; Dimensions in mm

Variants:
- Other pole numbers
- Gold-plated or partially gold-plated contact surfaces
- Other versions (or variants) can be requested from WAGO Sales or configured at https://configurator.wago.com/.

1-conductor female connector ▸ *MCS* MINI ▸ 2734 Series

Pin spacing: 3.81 mm / 0.15 inches ▸ Actuation type: Push-button ▸ Push-in CAGE CLAMP® ▸ Color: orange

Mounting type: Feed-through mounting; Panel mounting ▸ Mounting type: Mounting flange ▸ with reinforcing strips



2734-210/027-000

Pole number	Item No.	PU
10	**2734-210/027-000**	50
12	**2734-212/027-000**	25
14	**2734-214/027-000**	25
15	**2734-215/027-000**	25
16	**2734-216/027-000**	25
18	**2734-218/027-000**	25
19	**2734-219/027-000**	25
20	**2734-220/027-000**	25

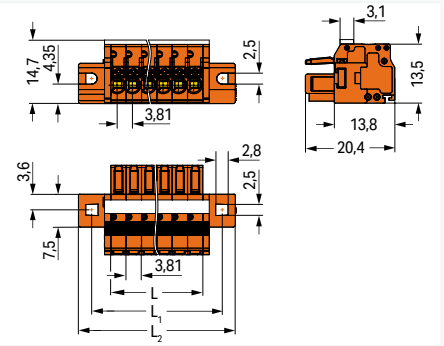

PU = packaging unit; SPU = subpackaging unit; Dimensions in mm

Variants:
- Other pole numbers
- Gold-plated or partially gold-plated contact surfaces
- Other versions (or variants) can be requested from WAGO Sales or configured at https://configurator.wago.com/.

1-conductor male connector ▸ *MCS* MINI ▸ 734 Series

Pin spacing: 3.81 mm / 0.15 inches ▸ Actuation type: Operating tool ▸ CAGE CLAMP® ▸ Color: orange

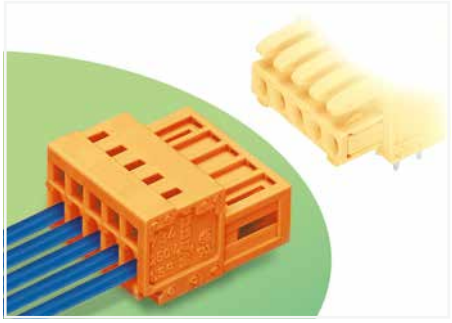

- Universal connection for all conductor types
- Easy cable pre-assembly and on-unit wiring via vertical and horizontal CAGE CLAMP® actuation
- For wire-to-wire and board-to-wire connections
- Strain relief plates and housings for factory and field assembly
- 100% protected against mismating
- Coding option available

5

Derating Curve
1-conductor female connector (734-102) with
1-conductor male connector (734-302)
Pin spacing: 3.5 mm / Conductor cross-section: 1.5 mm² "f-st"
Based on: EN 60512-5-2 / Reduction factor: 0.8

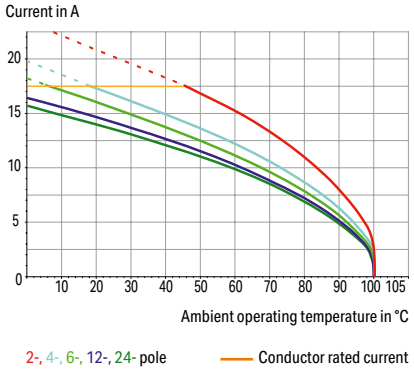

Electrical data			
Ratings per	**IEC/EN 60664-1**		
Overvoltage category	III	III	II
Pollution degree	3	2	2
Nominal voltage	160 V	160 V	320 V
Rated impulse withstand voltage	2.5 kV	2.5 kV	2.5 kV
Rated current	10 A	10 A	10 A
Approvals per	**UL 1059**		
Use group	B	C	D
Rated voltage	300 V	-	300 V
Rated current	10 A	-	10 A
Approvals per	**CSA**		
Use group	B	C	D
Rated voltage	300 V	-	300 V
Rated current	10 A	-	10 A

Connection Data	
Connection technology	CAGE CLAMP®
Strip length	6 … 7 mm / 0.24 … 0.28 inches
Solid conductor	0.08 … 1.5 mm² / 28 … 14 AWG
Fine-stranded conductor	0.08 … 1.5 mm² / 28 … 14 AWG
Fine-stranded conductor; with insulated ferrule	0.25 … 1.5 mm²
Fine-stranded conductor; with uninsulated ferrule	0.25 … 1.5 mm²
Note (conductor cross-section)	Terminating 1.5 mm² conductors is possible; however insulation diameter does not allow clamping units to be terminated in a row.

Material data	
Material group	I
Insulation material (main housing)	Polyamide (PA66)
Flammability class per UL94	V0
Clamping spring material	Chrome-nickel spring steel (CrNi)
Contact material	Electrolytic copper (E_{Cu})
Contact Plating	Tin

Environmental requirements	
Limit temperature range	-60 … +100 °C
Processing temperature	-35 … +60 °C

Note:
The *MCS – MULTI CONNECTION SYSTEM* includes connectors without breaking capacity in accordance with DIN EN 61984. When used as intended, these connectors must not be connected/disconnected when live or under load.When used as intended, these connectors must not be connected/disconnected when live or under load. The circuit design should ensure header pins, which can be touched, are not live when unmated.

Coding	Page 497
Cover	Page 498
Ferrule	Page 1081
Installation	Page 500, 1071
Marking	Page 1066
Mounting adapter	Page 500
Strain relief	Page 507
Test and measurement	Page 1088
Tool	Page 496, 1072
Direct marking	Page 492
Cutout dimensions	Page 494
See technical section for further information	
Approvals and corresponding ratings, visit www.wago.com	

1-conductor male connector ▸ *MCS* MINI ▸ 734 Series

Pin spacing: 3.81 mm / 0.15 inches ▸ Actuation type: Operating tool ▸ CAGE CLAMP® ▸ Color: orange

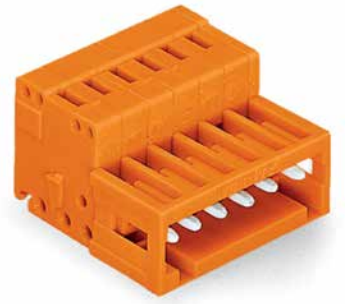

734-336

Pole number	Item No.	PU
2	734-332	200
3	734-333	200
4	734-334	100
5	734-335	100
6	734-336	100
8	734-338	50
9	734-339	50
10	734-340	50
12	734-342	50
14	734-344	50
15	734-345	25
16	734-346	25
18	734-348	25
19	734-349	25
20	734-350	25

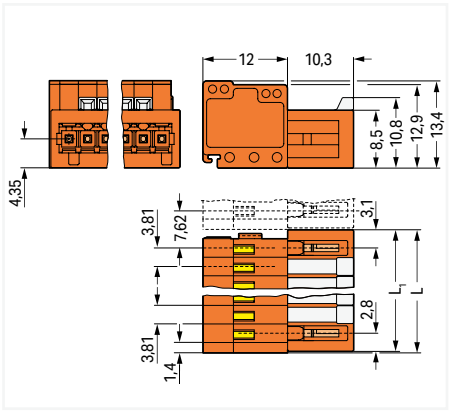

L = (pole no. – 1) x pin spacing + 5.9 mm + 0.45 mm
L_1 = L – 0.45 mm

Mounting type: Panel mounting ▸ Mounting type: Snap-in foot

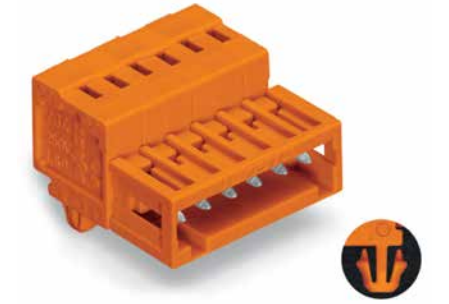

734-336/018-000

Pole number	Item No.	PU
2	734-332/018-000	200
3	734-333/018-000	100
4	734-334/018-000	100
5	734-335/018-000	100
6	734-336/018-000	100
8	734-338/018-000	50
9	734-339/018-000	50
10	734-340/018-000	50
12	734-342/018-000	50
14	734-344/018-000	50
15	734-345/018-000	25
16	734-346/018-000	25
18	734-348/018-000	25
19	734-349/018-000	25
20	734-350/018-000	25

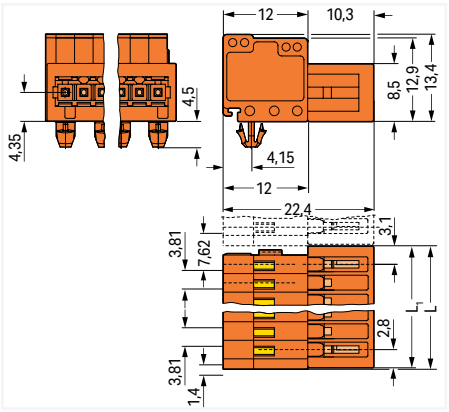

L = (pole no. – 1) x pin spacing + 5.9 mm + 0.45 mm
L_1 = L – 0.45 mm

Drilled hole pattern for panel mounting

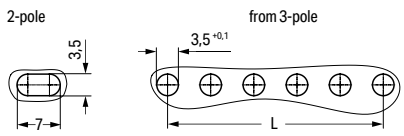

Even pole number: L = (pole no. – 2) x pin spacing
Odd pole number: L = (pole no. – 1) x pin spacing

Mounting type: Feed-through mounting; Panel mounting ▸ Mounting type: Mounting flange

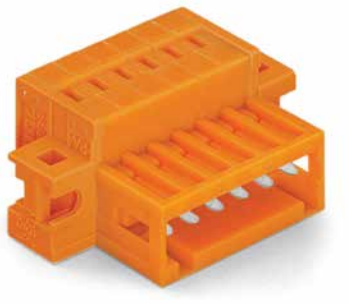

734-336/019-000

Pole number	Item No.	PU
2	734-332/019-000	100
3	734-333/019-000	100
4	734-334/019-000	50
5	734-335/019-000	50
6	734-336/019-000	50
8	734-338/019-000	50
9	734-339/019-000	50
10	734-340/019-000	50
12	734-342/019-000	25
14	734-344/019-000	25
15	734-345/019-000	25
16	734-346/019-000	25
18	734-348/019-000	25
19	734-349/019-000	25
20	734-350/019-000	25

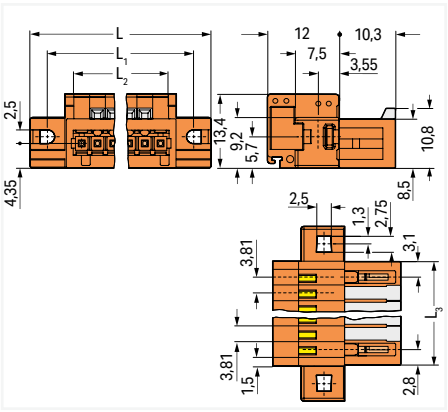

L = (pole no. x pin spacing) + 14.8 mm
L_1 = (pole no. x pin spacing) + 8.8 mm
L_2 = pole no. x pin spacing
L_3 = (pole no. – 1) x pin spacing + 5.9 mm

5

PU = packaging unit; SPU = subpackaging unit; Dimensions in mm

Variants:
- Other pole numbers
- Gold-plated or partially gold-plated contact surfaces
- Other versions (or variants) can be requested from WAGO Sales or configured at https://configurator.wago.com/.

THT female header ▸ *MCS* MINI ▸ 734 Series

Pin spacing: 3.81 mm / 0.15 inches ▸ Solder pin length: 3.8 mm ▸ Color: orange

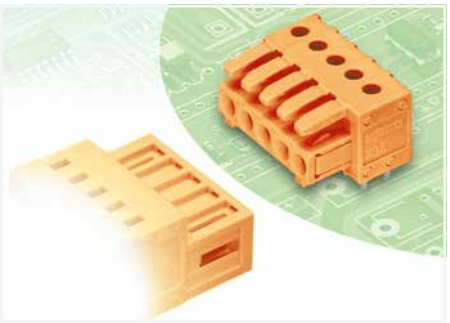

- Horizontal or vertical PCB mounting via straight or angled solder pins
- Integrated test ports for 2 mm Ø test plugs
- For board-to-board and board-to-wire connections
- Touch-proof PCB outputs
- Easy-to-identify inputs and outputs
- 100% protected against mismating
- Coding option available

5

Derating Curve
THT female header (734-532) with
1-conductor male connector (734-302)
Pin spacing: 3.5 mm / Conductor cross-section: 1.5 mm² "f-st"
Based on: EN 60512-5-2 / Reduction factor: 0.8

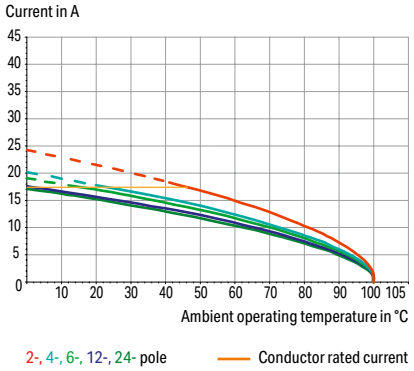

Electrical data			
Ratings per	**IEC/EN 60664-1**		
Overvoltage category	III	III	II
Pollution degree	3	2	2
Nominal voltage	160 V	160 V	320 V
Rated impulse withstand voltage	2.5 kV	2.5 kV	2.5 kV
Rated current	10 A	10 A	10 A
Approvals per	**UL 1059**		
Use group	B	C	D
Rated voltage	300 V	-	300 V
Rated current	10 A	-	10 A
Approvals per	**CSA**		
Use group	B	C	D
Rated voltage	300 V	-	300 V
Rated current	10 A	-	10 A

Material data	
Material group	I
Insulation material (main housing)	Polyamide (PA66)
Flammability class per UL94	V0
Contact material	Copper alloy
Contact Plating	Tin

Mechanical data	
Solder pin arrangement	over the entire female connector (in-line)
Number of solder pins per potential	1
Solder pin length	3.8 mm
Solder pin dimensions	0.9 x 0.9 mm
Drilled hole diameter	1.4 $^{(+0.1)}$ mm

Environmental requirements	
Limit temperature range	-60 … +100 °C
Processing temperature	-35 … +60 °C

Note:
The *MCS – MULTI CONNECTION SYSTEM* includes connectors without breaking capacity in accordance with DIN EN 61984. When used as intended, these connectors must not be connected/disconnected when live or under load.When used as intended, these connectors must not be connected/disconnected when live or under load. The circuit design should ensure header pins, which can be touched, are not live when unmated.

See technical section for further information

Approvals and corresponding ratings, visit www.wago.com

THT female header ▸ *MCS* MINI ▸ 734 Series

Pin spacing: 3.81 mm / 0.15 inches ▸ Solder pin length: 3.8 mm ▸ Color: orange

Mating direction to the PCB: 0 °



734-566

Pole number	Item No.	PU
3	734-563	200
4	734-564	100
5	734-565	100
6	734-566	100
8	734-568	50
9	734-569	50
10	734-570	50
12	734-572	25
14	734-574	25
15	734-575	25
16	734-576	25
20	734-580	25

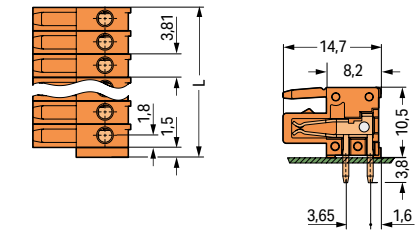

L = (pole no. x pin spacing) + 1.5 mm

Mating direction to the PCB: 90 °



734-506

Pole number	Item No.	PU
2	734-502	200
3	734-503	200
4	734-504	100
5	734-505	100
6	734-506	100
8	734-508	50
9	734-509	50
10	734-510	50
12	734-512	25
14	734-514	25
15	734-515	25
16	734-516	25
20	734-520	25

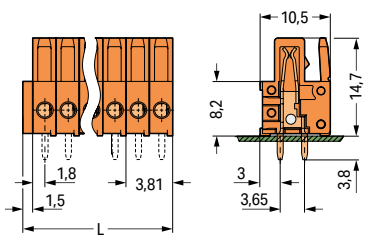

L = (pole no. x pin spacing) + 1.5 mm

Locking of plug-in connection: Locking lever ▸ Mating direction to the PCB: 0 °



734-566/037-000

Pole number	Item No.	PU
2	734-562/037-000	100
3	734-563/037-000	100
4	734-564/037-000	100
5	734-565/037-000	50
6	734-566/037-000	50
8	734-568/037-000	50
9	734-569/037-000	50
10	734-570/037-000	50
12	734-572/037-000	25
14	734-574/037-000	25
15	734-575/037-000	25
16	734-576/037-000	25
20	734-580/037-000	25

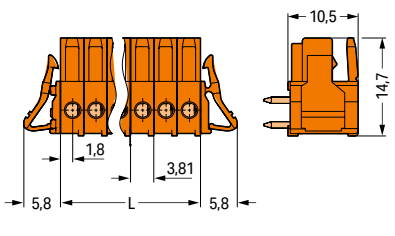

L = pole no. x pin spacing

5

PU = packaging unit; SPU = subpackaging unit; Dimensions in mm

Variants:

- Other pole numbers
- Gold-plated or partially gold-plated contact surfaces
- Other versions (or variants) can be requested from WAGO Sales or configured at https://configurator.wago.com/.

THT female header ▸ *MCS* MINI ▸ 734 Series

Pin spacing: 3.81 mm / 0.15 inches ▸ Solder pin length: 3.8 mm ▸ Color: orange

Locking of plug-in connection: Locking lever ▸ Mating direction to the PCB: 90 °



734-506/037-000

Pole number	Item No.	PU
2	**734-502/037-000**	100
3	**734-503/037-000**	100
4	**734-504/037-000**	100
5	**734-505/037-000**	50
6	**734-506/037-000**	50
8	**734-508/037-000**	50
9	**734-509/037-000**	50
10	**734-510/037-000**	50
12	**734-512/037-000**	25
14	**734-514/037-000**	25
15	**734-515/037-000**	25
16	**734-516/037-000**	25
20	**734-520/037-000**	25

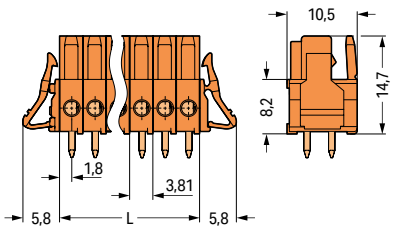

L = pole no. x pin spacing

PU = packaging unit; SPU = subpackaging unit; Dimensions in mm

Variants:
- Other pole numbers
- Gold-plated or partially gold-plated contact surfaces
- Other versions (or variants) can be requested from WAGO Sales or configured at https://configurator.wago.com/.

THT male header ▸ *MCS* MINI ▸ 734 Series

Pin spacing: 3.81 mm / 0.15 inches ▸ Color: orange

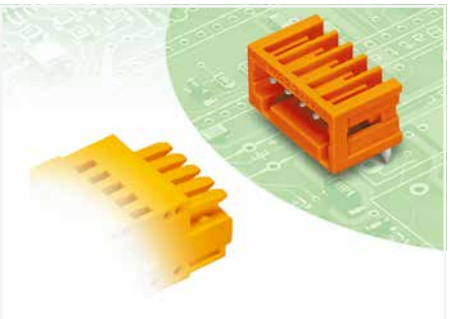

- Horizontal or vertical PCB mounting via straight or angled solder pins
- 100% protected against mismating; only mating halves with the same number of poles can be connected together
- Coding option available

Derating Curve
1-conductor female connector (734-102) with
THT male header (734-162)
Pin spacing: 3.5 mm / Conductor cross-section: 1.5 mm² "f-st"
Based on: EN 60512-5-2 / Reduction factor: 0.8

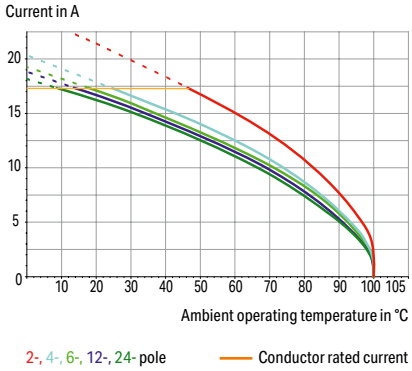

Electrical data			
Ratings per	**IEC/EN 60664-1**		
Overvoltage category	III	III	II
Pollution degree	3	2	2
Nominal voltage	160 V	160 V	320 V
Rated impulse withstand voltage	2.5 kV	2.5 kV	2.5 kV
Rated current	10 A	10 A	10 A
Approvals per	**UL 1059**		
Use group	B	C	D
Rated voltage	300 V	-	300 V
Rated current	10 A	-	10 A
Approvals per	**CSA**		
Use group	B	C	D
Rated voltage	300 V	-	300 V
Rated current	10 A	-	10 A

Material data	
Material group	I
Insulation material (main housing)	Polyamide (PA66)
Flammability class per UL94	V0
Contact material	Electrolytic copper (E_{Cu})
Contact Plating	Tin

Mechanical data	
Solder pin arrangement	over the entire male connector (in-line)
Number of solder pins per potential	1
Solder pin dimensions	1 x 1 mm
Drilled hole diameter	1.4 $^{(+0.1)}$ mm

Environmental requirements	
Limit temperature range	-60 … +100 °C
Processing temperature	-35 … +60 °C

Note:
The *MCS – MULTI CONNECTION SYSTEM* includes connectors without breaking capacity in accordance with DIN EN 61984. When used as intended, these connectors must not be connected/disconnected when live or under load.When used as intended, these connectors must not be connected/disconnected when live or under load. The circuit design should ensure header pins, which can be touched, are not live when unmated.

Coding Page 497

See technical section for further information

Approvals and corresponding ratings, visit www.wago.com

THT male header ▸ *MCS* MINI ▸ 734 Series

Pin spacing: 3.81 mm / 0.15 inches ▸ Color: orange

Mating direction to the PCB: 0 ° ▸ Solder pin length: 3.8 mm



734-266

Pole number	Item No.	PU
2	734-262	200
3	734-263	200
4	734-264	200
5	734-265	200
6	734-266	100
8	734-268	100
9	734-269	100
10	734-270	100
12	734-272	100
14	734-274	100
15	734-275	100
16	734-276	50
18	734-278	50
19	734-279	50
20	734-280	50

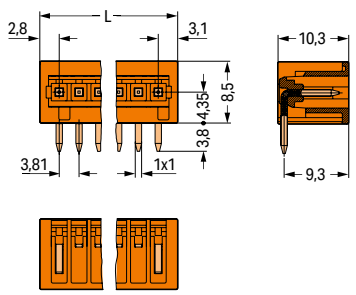

L = (pole no. – 1) x pin spacing + 5.9 mm

Mating direction to the PCB: 90 ° ▸ Solder pin length: 4.5 mm



734-236

Pole number	Item No.	PU
2	734-232	200
3	734-233	200
4	734-234	200
5	734-235	200
6	734-236	100
8	734-238	100
9	734-239	100
10	734-240	100
12	734-242	100
14	734-244	100
15	734-245	100
16	734-246	50
18	734-248	50
19	734-249	50
20	734-250	50

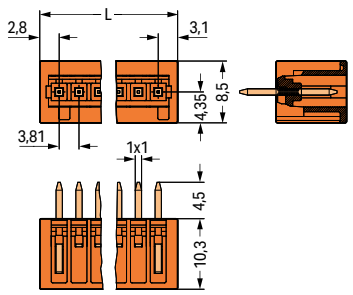

L = (pole no. – 1) x pin spacing + 5.9 mm

Double-deck ▸ Mating direction to the PCB: 0 ° ▸ Solder pin length: 3.6 mm



734-436

Pole number	Item No.	PU
4	734-432	100
6	734-433	100
8	734-434	100
10	734-435	100
12	734-436	100
14	734-437	50
16	734-438	50
18	734-439	50
20	734-440	50
24	734-442	50

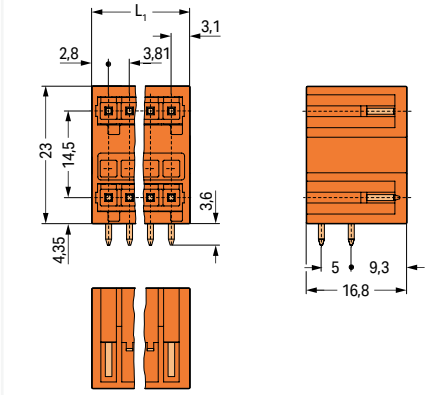

L_1 = (pole no./2 – 1) x pin spacing + 5.9 mm

PU = packaging unit; SPU = subpackaging unit; Dimensions in mm

Variants:

- Other pole numbers
- Gold-plated or partially gold-plated contact surfaces
- Other versions (or variants) can be requested from WAGO Sales or configured at https://configurator.wago.com/.

THT male header ▸ *MCS* MINI ▸ 734 Series

Pin spacing: 3.81 mm / 0.15 inches ▸ Color: orange

Double-deck with support ▸ Mating direction to the PCB: 0 °
▸ Solder pin length: 3.6 mm

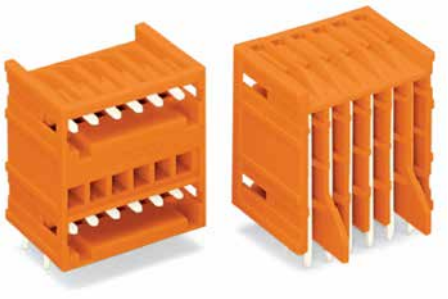

734-436/001-000

Pole number	Item No.	PU
4	**734-432/001-000**	100
6	**734-433/001-000**	100
7	**734-437/001-000**	50
8	**734-434/001-000**	100
10	**734-435/001-000**	100
12	**734-436/001-000**	50
16	**734-438/001-000**	50
18	**734-439/001-000**	50
20	**734-440/001-000**	50
24	**734-442/001-000**	50

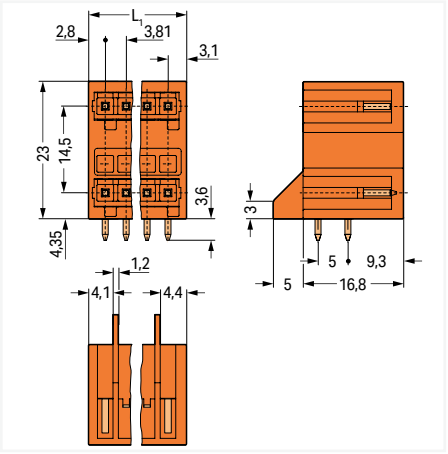

L_1 = (pole no./2 – 1) x pin spacing + 5.9 mm

PU = packaging unit; SPU = subpackaging unit; Dimensions in mm

Variants:
- Other pole numbers
- Gold-plated or partially gold-plated contact surfaces
- Other versions (or variants) can be requested from WAGO Sales or configured at https://configurator.wago.com/.

THR male header ▸ *MCS* MINI ▸ 734 Series

Pin spacing: 3.81 mm / 0.15 inches ▸ Color: black

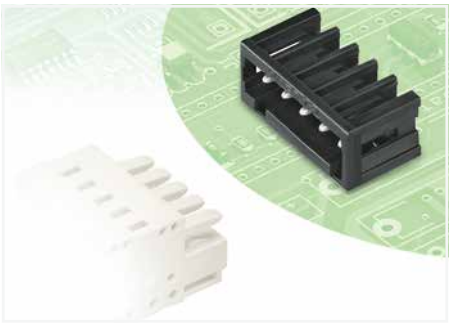

- THR male headers for reflow soldering in SMT applications
- Available in tape-and-reel packaging for automated pick-and-place PCB assembly
- Optimal thermal penetration via pin enclosure design provides lower soldering temperatures
- 100% protected against mismating
- Coding via coding fingers

5

Derating Curve
1-conductor female connector (734-102) with
THR male header (734-132/105-604)
Pin spacing: 3.5 mm / Conductor cross-section: 1.5 mm² "f-st"
Based on: EN 60512-5-2 / Reduction factor: 0.8

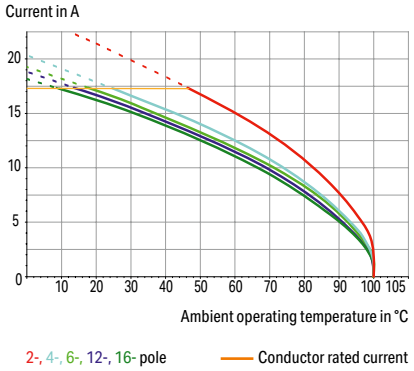

Electrical data			
Ratings per	**IEC/EN 60664-1**		
Overvoltage category	III	III	II
Pollution degree	3	2	2
Nominal voltage	160 V	160 V	320 V
Rated impulse withstand voltage	2.5 kV	2.5 kV	2.5 kV
Rated current	10 A	10 A	10 A
Approvals per	**UL 1059**		
Use group	B	C	D
Rated voltage	300 V	-	300 V
Rated current	10 A	-	10 A
Approvals per	**CSA**		
Use group	B	C	D
Rated voltage	300 V	-	300 V
Rated current	10 A	-	10 A

Material data	
Material group	I
Insulation material (main housing)	Polyphthalamide (PPA GF)
Flammability class per UL94	V0
Contact material	Electrolytic copper (E_{Cu})
Contact Plating	Tin

Mechanical data	
Solder pin arrangement	over the entire male connector (in-line)
Number of solder pins per potential	1
Solder pin length	2.4 mm
Solder pin dimensions	1 x 1 mm
Plated through-hole diameter (THR)	1.4 $^{(+0.1)}$ mm

Environmental requirements	
Limit temperature range	-60 … +100 °C
Processing temperature	-35 … +60 °C

Note:
The *MCS – MULTI CONNECTION SYSTEM* includes connectors without breaking capacity in accordance with DIN EN 61984. When used as intended, these connectors must not be connected/disconnected when live or under load.When used as intended, these connectors must not be connected/disconnected when live or under load. The circuit design should ensure header pins, which can be touched, are not live when unmated.

THR soldering	Page 466
Coding	Page 497
See technical section for further information	
Approvals and corresponding ratings, visit www.wago.com	

THR male header ▸ *MCS* MINI ▸ 734 Series

Pin spacing: 3.81 mm / 0.15 inches ▸ Color: black

Mating direction to the PCB: 0 °

Suitable for automated assembly



734-270/105-604

Pole number	Item No.	PU
2	734-262/105-604	200
3	734-263/105-604	200
4	734-264/105-604	200
5	734-265/105-604	200
6	734-266/105-604	100
8	734-268/105-604	100
10	734-270/105-604	100
12	734-272/105-604	100



734-270/105-604/997-407

Pole number	Tape width	Item No.	PU
2	32 mm	734-262/105-604/997-405	280
3	32 mm	734-263/105-604/997-405	280
4	32 mm	734-264/105-604/997-405	280
5	56 mm	734-265/105-604/997-407	280
6	56 mm	734-266/105-604/997-407	280
8	56 mm	734-268/105-604/997-407	280
10	56 mm	734-270/105-604/997-407	280
12	72 mm	734-272/105-604/997-408	280

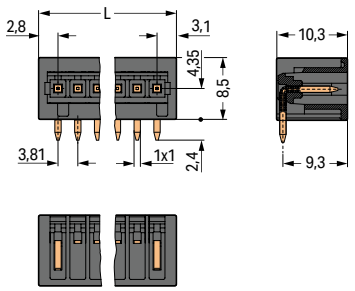

L = (pole no. – 1) x pin spacing + 5.9 mm

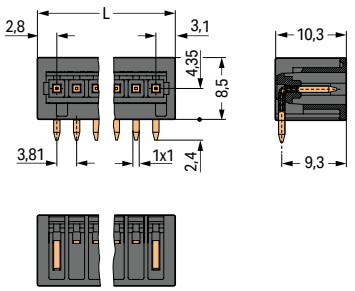

L = (pole no. – 1) x pin spacing + 5.9 mm

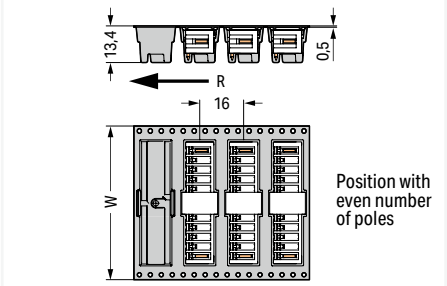

W = tape width
R = feed direction

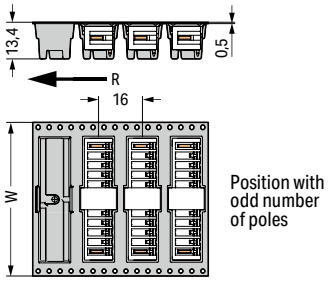

W = tape width
R = feed direction

PU = packaging unit; SPU = subpackaging unit; Dimensions in mm

Variants:

- Other pole numbers
- Other solder pin lengths
- Gold-plated or partially gold-plated contact surfaces
- Other versions (or variants) can be requested from WAGO Sales or configured at https://configurator.wago.com/.

THR male header ▸ *MCS* MINI ▸ 734 Series

Pin spacing: 3.81 mm / 0.15 inches ▸ Color: black

Mating direction to the PCB: 90 °



734-240/105-604

Pole number	Item No.	PU
2	734-232/105-604	200
3	734-233/105-604	200
4	734-234/105-604	200
5	734-235/105-604	200
6	734-236/105-604	100
8	734-238/105-604	100
10	734-240/105-604	100
12	734-242/105-604	100

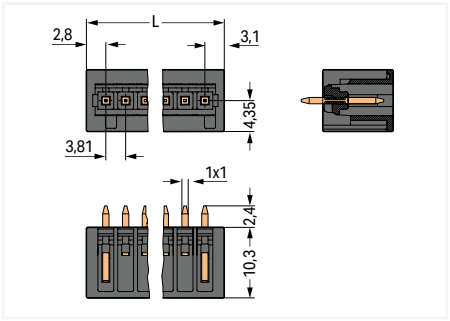

L = (pole no. – 1) x pin spacing + 5.9 mm

Suitable for automated assembly



734-240/105-604/997-407

Pole number	Tape width	Item No.	PU
2	32 mm	734-232/105-604/997-405	200
3	32 mm	734-233/105-604/997-405	200
4	32 mm	734-234/105-604/997-405	200
5	56 mm	734-235/105-604/997-407	200
6	56 mm	734-236/105-604/997-407	200
8	56 mm	734-238/105-604/997-407	200
10	56 mm	734-240/105-604/997-407	200
12	72 mm	734-242/105-604/997-408	200

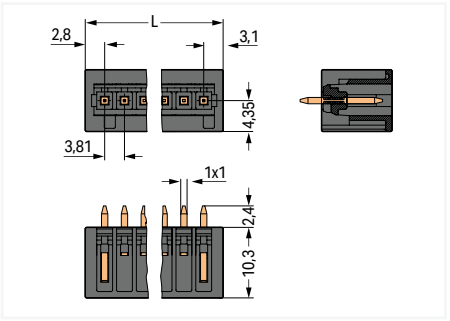

L = (pole no. – 1) x pin spacing + 5.9 mm

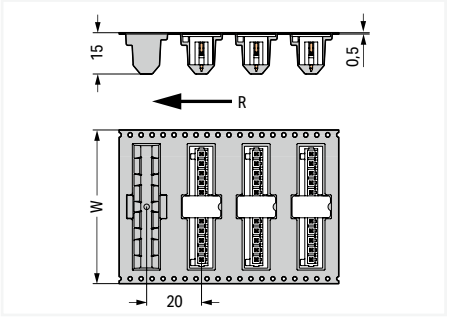

W = tape width
R = feed direction

PU = packaging unit; SPU = subpackaging unit; Dimensions in mm

Variants:
- Other pole numbers
- Other solder pin lengths
- Gold-plated or partially gold-plated contact surfaces
- Other versions (or variants) can be requested from WAGO Sales or configured at https://configurator.wago.com/.

Direct Marking

MCS MINI

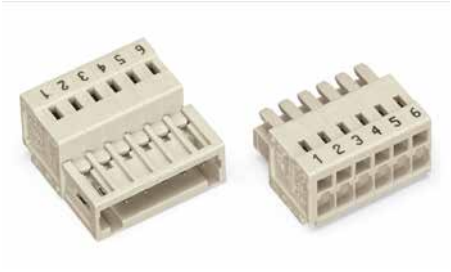



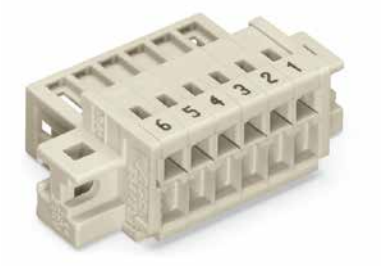

5

The pole numbers of male and female connectors for CAGE CLAMP® termination can be marked via factory direct marking.

Two standard marking orientations are available:
1. Marking perpendicular to conductor entry
2. Marking parallel to conductor entry

Other custom marking options are available upon request.

Direct marking is not suitable for MCS PCB Male Headers. WAGO recommends pole marking on the PCB for these headers.

Female headers with solder pins are exposed to aggressive flux agents during wave soldering. Select direct marking procedures are available upon request for these items.

The marking type is always defined by the second 4-digit block of the item no. suffix for items with standard colors and materials.
Example: 734-106/. . . . - xxxx
xxxx = Item no. suffix for direct marking

Direct marking of 1-conductor female connectors, perpendicular to conductor entry, 1 ... pole no., item no. suffix.: /. . . - 047	
Version	**Item No. Example**
1-cond. female connector, 6-pole, light gray	**734-106/000-047**
1-cond. female connector, with locking levers, 6-pole, light gray	**734-106/037-047**
1-cond. female connector, with strain relief plate, 6-pole, light gray	**734-106/033-047**
1-cond. female connector, with locking levers and strain relief plate, 6-pole, light gray	**734-106/037-047/033-000**

Direct marking of 1-conductor male connectors, perpendicular to conductor entry, pole no. ... 1, item no. suffix.: /. . . - 044	
Version	**Item No. Example**
1-cond. male connector, 6-pole, light gray	**734-306/000-044**
1-cond. male connector, with mounting flanges, 6-pole, light gray	**734-306/019-044**
1-cond. male connector, with mounting flanges and strain relief plate, 6-pole, light gray	**734-306/019-044/033-000**

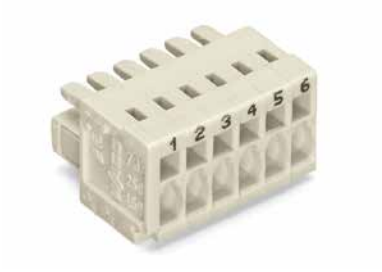

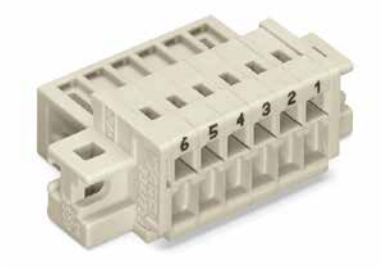

Direct marking of 1-conductor female connectors, parallel to conductor entry, 1 ... pole no., item no. suffix.: /. . . - 9037	
Version	**Item No. Example**
1-cond. female connector, 6-pole, light gray	**734-106/000-9037**
1-cond. female connector, with locking levers, 6-pole, light gray	**734-106/037-9037**
1-cond. female connector, with strain relief plate, 6-pole, light gray	**734-106/033-9037**
1-cond. female connector, with locking levers and strain relief plate, 6-pole, light gray	**734-106/037-9037/033-000**

Direct marking of 1-conductor male connectors, parallel to conductor entry, pole no. ... 1, item no. suffix.: /. . . - 9034	
Version	**Item No. Example**
1-cond. male connector, 6-pole, light gray	**734-306/000-9034**
1-cond. male connector, with mounting flanges, 6-pole, light gray	**734-306/019-9034**
1-cond. male connector, with mounting flanges and strain relief plate, 6-pole, light gray	**734-306/019-9034/033-000**

Direct Marking

MCS MINI





Direct marking of 1-conductor female connectors with, push-buttons, perpendicular to conductor entry, 1 ... pole no., item no. suffix.: /. . . - 047	
Version	**Item No. Example**
1-conductor female connector, with push-buttons, 6-pole, light gray	**2734-106/000-047**
1-conductor female connector, with push-buttons and locking levers, 6-pole, light gray	**2734-106/037-047**
1-conductor female connector, with push-buttons and strain relief plate, 6-pole, light gray	**2734-106/033-047**
1-conductor female connector, with push-buttons, locking levers and strain relief plate, 6-pole, light gray	**2734-106/037-047/033-0000**

Direct marking of 2-conductor combi strips, perpendicular to conductor entry, 1 ... pole no., item no. suffix.: /. . . - 047	
Version	**Item No. Example**
2-conductor combi strip, 6-pole, light gray	**734-366/000-047**
2-conductor combi strip, with locking levers, 6-pole, light gray	**734-366/037-047**
2-conductor combi strip, with locking levers and strain relief plate, 6-pole, light gray	**734-366/037-047/033-000**





Direct marking of 1-conductor female connectors with, push-buttons, parallel to conductor entry, 1 ... pole no., item no. suffix.: /. . . - 9037	
Version	**Item No. Example**
1-conductor female connector, with push-buttons, 6-pole, light gray	**2734-106/000-9037**
1-conductor female connector, with push-buttons and locking levers, 6-pole, light gray	**2734-106/037-9037**
1-conductor female connector, with push-buttons and strain relief plate, 6-pole, light gray	**2734-106/033-9037**
1-conductor female connector, with push-buttons, locking levers and strain relief plate, 6-pole, light gray	**2734-106/037-9037/033-000**

Direct marking of 2-conductor combi strips, parallel to conductor entry, 1 ... pole no., item no. suffix.: /. . . - 9037	
Version	**Item No. Example**
2-conductor combi strip, 6-pole, light gray	**734-366/000-9037**
2-conductor combi strip, with locking levers, 6-pole, light gray	**734-366/037-9037**
2-conductor combi strip, with locking levers and strain relief plate, 6-pole, light gray	**734-366/037-9037/033-000**

Cutout Dimensions

MCS MINI

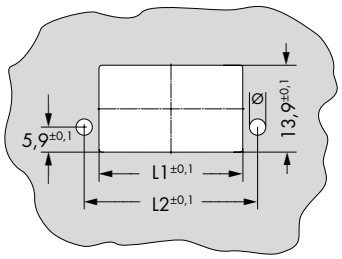

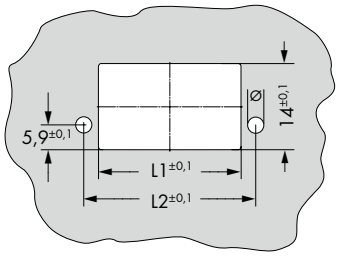



5

Table 1
Cutout for male connectors
with mounting flanges (734 Series)

	Pin Spacing: 3.5 mm		Pin Spacing: 3.81 mm	
Pole No.	L1	L2	L1	L2
2	9.8	15.5	10 1	16.1
3	13.3	19	13.9	19.9
4	16.8	22.5	17.7	23.7
5	20.3	26	21.5	27.6
6	24	29.4	25.6	31.3
7	27.5	32.9	29.4	35.1
8	31	36.4	33.2	38.9
9	34.5	39.9	37	42.7
10	38	43.4	40.8	46.5
11	41.5	46.9	44.6	50.3
12	45	50.4	48.4	54.1
13	48.8	53.8	52.5	57.8
14	52.3	57.3	56.3	61.6
15	55.8	60.8	60.1	65.5
16	59.3	64.3	64	69.3
17	62.8	67.8	67.8	73.1
18	66.3	71.3	71.6	76.9
19	69.9	74.7	75.5	80.6
20	73.4	78.2	79.3	84.4
21	76.9	81.7	83.1	88.2
22	80.4	85.2	86.9	92
23	83.9	88.7	90.7	95.8
24	87.4	92.2	94.5	99.6

Table 2
Cutout for female connectors
with mounting flanges (2734 Series)

	Pin Spacing: 3.5 mm		Pin Spacing: 3.81 mm	
Pole No.	L1	L2	L1	L2
2	10.4	15.5	11	16.1
3	13.9	19	14.8	19.9
4	17.4	22.5	18.6	23.7
5	20.9	26	22.5	27.6
6	24.6	29.4	26.5	31.3
7	28.1	32.9	30.3	35.1
8	31.6	36.4	34.1	38.9
9	35.1	39.9	37.9	42.7
10	38.6	43.4	41.7	46.5
11	42.1	46.9	45.5	50.3
12	45.6	50.4	49.3	54.1
13	49.4	53.8	53.4	57.8
14	52.9	57.3	57.2	61.6
15	56.4	60.8	61.1	65.5
16	59.9	64.3	64.9	69.3
17	63.4	67.8	68.7	73.1
18	66.9	71.3	72.5	76.9
19	70.5	74.7	76.4	80.6
20	74	78.2	80.2	84.4
21	77.5	81.7	84	88.2
22	81	85.2	87.8	92
23	84.5	88.7	91.6	95.8
24	88	92.2	95.4	99.6

Self-tapping screws
for 1.8 mm ± 0.1 mm Ø mounting hole

Dimensions	Item No.	Pack. Unit
B 2.2 x 9.5 mm	**209-147**	200 (100)
B 2.2 x 13 mm	**231-194**	200 (100)

Screws with nuts,
for 2.5 mm ± 0.1 mm Ø mounting hole

Dimensions	Item No.	Pack. Unit
M 2 x 12 mm	**231-195**	200 (100)

Screws with nuts,
for 3.0 mm ± 0.1 mm Ø mounting hole

Dimensions	Item No.	Pack. Unit
M 2.5 x 10 mm	**231-295**	200 (100)

Dimensions (in mm)
Drilled hole Ø depends on the type of screw used (see mounting screws).

PU = Packaging Unit; SPU = Subpackaging Unit; Dimensions in mm

Additional information on through-panel mounting and cutout dimensions is available upon request.

Operating tool

Operating pliers



210-251

Suitable for male and female connectors with 2.5 mm, 3.5 mm, 3.81 mm pin spacing and CAGE CLAMP® connection ▸ Color ▸ yellow

Color	Item No.	PU (SPU)
yellow	**210-251**	20 (1)

Suitable for male and female connectors with 3.5 mm, 3.81 mm, 5 mm, 5.08 mm, 7.5 mm and 7.62 mm pin spacing and CAGE CLAMP® connection ▸ Color ▸ red

Color	Item No.	PU (SPU)
red	**210-250**	20 (1)

Operating lever ▸ Pin spacing: 3.5/3.81 mm ▸ Suitable for 734, 2734 Series



734-191

Color	Item No.	PU (SPU)
black	**734-191**	100 (25)
white	**734-230**	100 (25)

Push-button/tool ▸ Pin spacing: 3.5/3.81 mm ▸ Suitable for 734, 2734 Series



734-190

Color	Item No.	PU (SPU)
natural	**734-190**	100 (25)
black	**734-231**	100 (25)



Conductor termination parallel to CAGE CLAMP® actuation



Inserting a conductor via operating lever.

PU = packaging unit; SPU = subpackaging unit

Coding

Coding key



734-400

Suitable for double-deck THT male headers; snaps into lower level ▸ Color ▸ light gray

Color	Item No.	PU (SPU)
light gray	**734-400**	500 (100)

Suitable for male connectors

Color	Item No.	PU (SPU)
white	**734-130**	500 (100)
black	**734-159**	500 (100)

Coding pin carrier with 5 coding pins ▸ Suitable for female connectors with conductor connection and levers ▸ Color ▸ orange



2734-505

Color	Item No.	PU
orange	**2734-505**	25



Coding a 1-conductor female connector by inserting a coding pin.

PU = packaging unit; SPU = subpackaging unit

Cover ▸ Finger guard ▸ Pin spacing: 3.5/3.81 mm / 0.138/0.15 inches ▸ Suitable for THT male headers ▸ Color ▸ black



734-420

Color	Item No.	PU (SPU)
● black	734-420	100 (25)



Finger guards provide touch-proof protection (IP20).

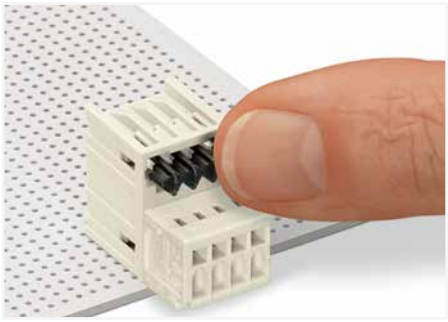

Insert the finger guard into the male header to be protected.



Cut finger guard to the required number of poles.
Do not use single-pole covers!

5

PU = packaging unit; SPU = subpackaging unit

Insulation stop ▸ Suitable for male and female connectors with CAGE CLAMP® connection (734 Series) ▸ Color ▸ light gray



734-671

Color	Item No.	PU (SPU)
◯ light gray	**734-671**	200 (25)



Conductors with small cross-sections are highly flexible,and they deform when pushed against the conductor stop in connectors. As a result, the conductor insulation – not the copper conductor – may be clamped, causing intermittent contact or no contact at all.
The solution: an insulation stop for CAGE CLAMP®-equipped 734 Series Male and Female Connectors.

5

PU = packaging unit; SPU = subpackaging unit

Mounting accessories

Mounting screw ▸ Screw with nut; M2x12



231-195

Length	Item No.	PU (SPU)
12 mm	**231-195**	200 (100)

Mounting screw ▸ Self-tapping screw; B 2.2x13



209-147

Length	Item No.	PU (SPU)
13 mm	**231-194**	200 (100)

Mounting adapter, for DIN-35 rail ▸ Suitable for male and female connectors with snap-in mounting feet ▸ Color ▸ gray



209-137

Color	Item No.	PU
gray	**209-137**	25

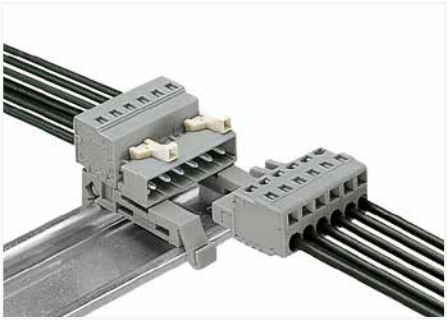

Female connector with snap-in mounting feet and 209-137 Mounting Adapter on DIN-35 rail

5

PU = packaging unit; SPU = subpackaging unit

Mounting accessories

Mounting foot, for DIN-35 rail ▸ Suitable for male and female connectors with snap-in mounting feet (for panel mounting) ▸ Color ▸ gray



209-120

Color	Item No.	PU (SPU)
gray	**209-120**	500 (25)

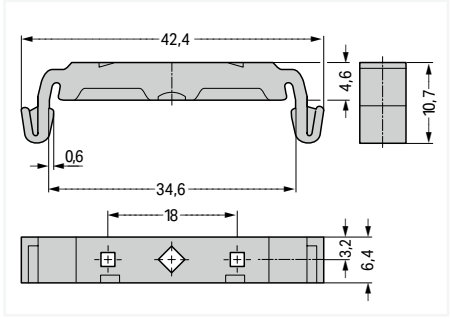

PU = packaging unit; SPU = subpackaging unit

Locking system ▸ Suitable for female connectors with conductor connection and levers ▸ Color ▸ orange

Lateral locking lever



2734-510

Color	Item No.	PU (SPU)
orange	**2734-510**	50 (44)

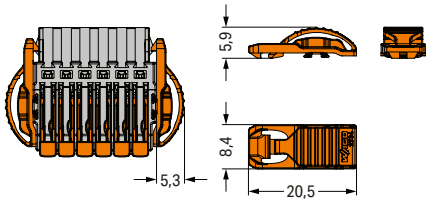

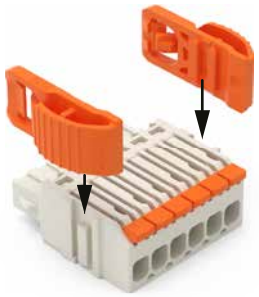

Install the side locking levers.

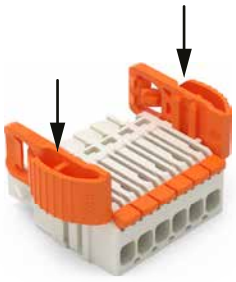

Insert the locking levers into the receptacles until fully inserted.

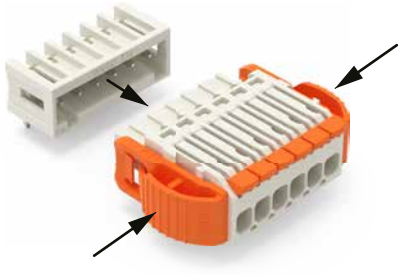

Disconnect the female connector after operating the locking mechanism.

PU = packaging unit; SPU = subpackaging unit; Dimensions in mm

Locking system ▸ Suitable for female connectors with conductor connection and levers ▸ Color ▸ orange

Center locking lever



2734-516

Color	Item No.	PU
orange	**2734-516**	100

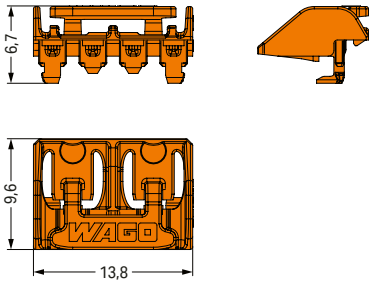

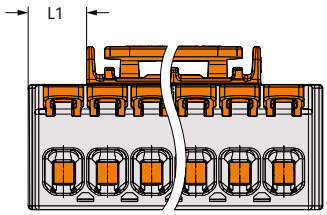

Pole	Piece	L1
4	1	1.15 mm
5	1	4.65 mm
6	1	4.65 mm
7	1	8.15 mm
8	1	8.15 mm
9	2	11.65 mm
10	2	11.65 mm

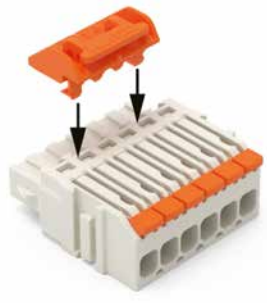

Install the center locking device.

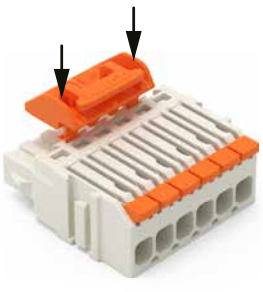

Insert the locking lever into the receptacles until fully inserted.

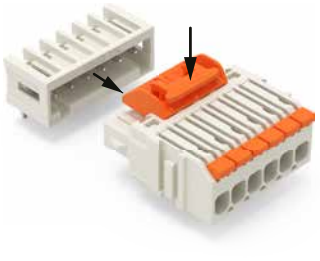

Disconnect the female connector after operating the locking mechanism.

PU = packaging unit; SPU = subpackaging unit; Dimensions in mm

Strain relief plate

Mounting type: Snap-on ▸ Color: light gray

Suitable for 2-pole male and female headers with levers (2231 and 2721 Series)



2734-532

Width	Item No.	PU
6 mm	**2734-532**	25

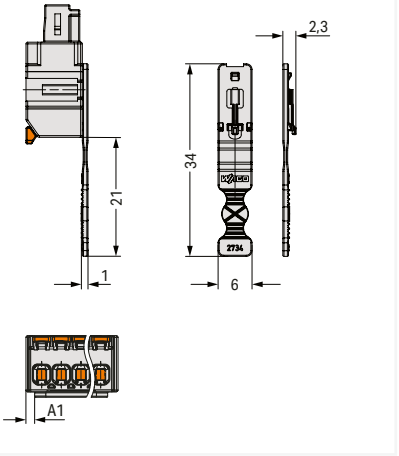

Pole no. 2: A1 = 1.55 mm

Suitable for 3-pole male and female headers with levers (2231 and 2721 Series)



2734-533

Width	Item No.	PU
9.5 mm	**2734-533**	25

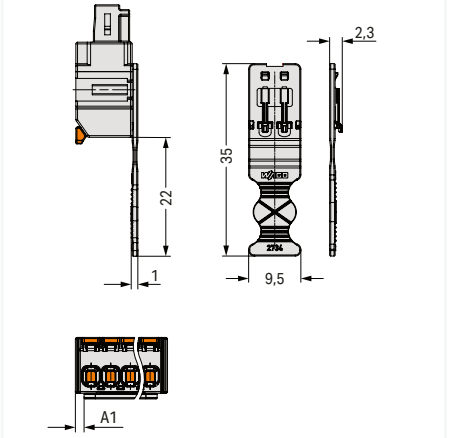

Pole no. 3: A1 = 1.55 mm

Suitable for 4 … 7-pole male and female headers with levers (2231 and 2721 Series)



2734-534

Width	Item No.	PU
13 mm	**2734-534**	25

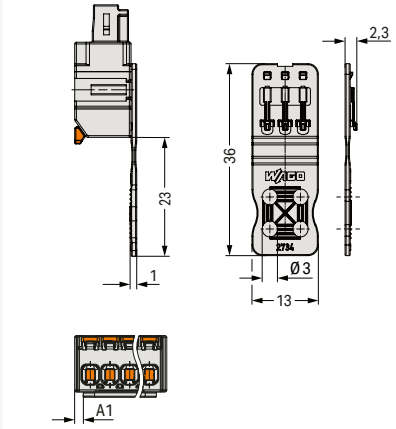

Pole no. 4: A1 = 1.55 mm
Pole no. 5: A1 = 5.05 mm
Pole no. 6: A1 = 5.05 mm
Pole no. 7: A1 = 8.55 mm

PU = packaging unit; SPU = subpackaging unit; Dimensions in mm

Strain relief plate

Mounting type: Snap-on ▸ Color: light gray

Suitable for 8 … 11-pole male and female headers with levers (2231 and 2721 Series)



2734-535

Width	Item No.	PU
27 mm	**2734-535**	25

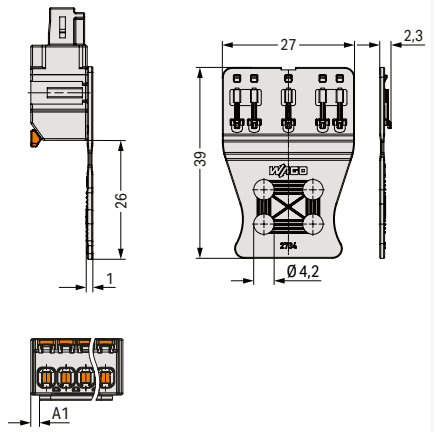

Pole no. 8: A1 = 1.55 mm
Pole no. 9: A1 = 5.05 mm
Pole no. 10: A1 = 5.05 mm
Pole no. 11: A1 = 8.55 mm

Suitable for 12 … 16-pole male and female headers with levers (2231 and 2721 Series)



2734-536

Width	Item No.	PU
41 mm	**2734-536**	25

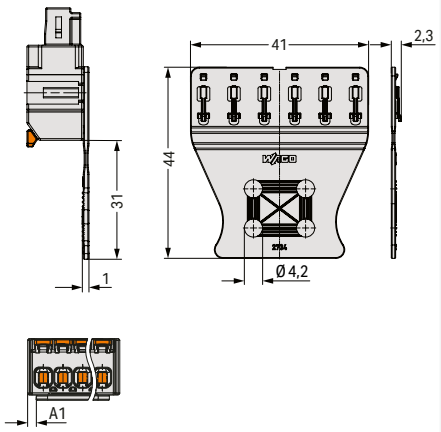

Pole no. 12: A1 = 1.55 mm
Pole no. 13: A1 = 5.05 mm
Pole no. 14: A1 = 5.05 mm
Pole no. 15: A1 = 8.55 mm
Pole no. 16: A1 = 8.55 mm



Mounting the strain relief plate

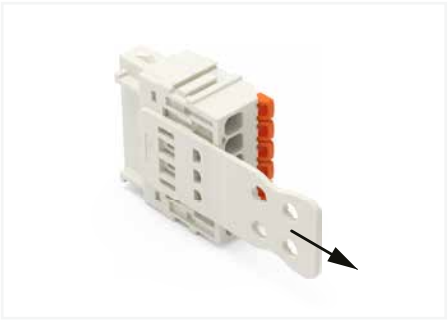

Insert the strain relief plate into the receptacle and pull until it hits the backstop in the conductor connection direction.



Strain relief plate; mounted on field side

5

PU = packaging unit; SPU = subpackaging unit; Dimensions in mm

Strain relief plate

Mounting type: Insert

Suitable for standard male and female connectors (2.5 mm; 3.5 mm; 5 mm; 7.5 mm pin spacing) ▸ Color: light gray



734-129

Width	Item No.	PU (SPU)
6 mm	**734-127**	100 (25)
12.5 mm	**734-128**	100 (25)
25 mm	**734-129**	100 (25)
35 mm	**734-126**	100 (25)
55 mm	**734-426**	50 (25)
75 mm	**734-427**	50 (25)

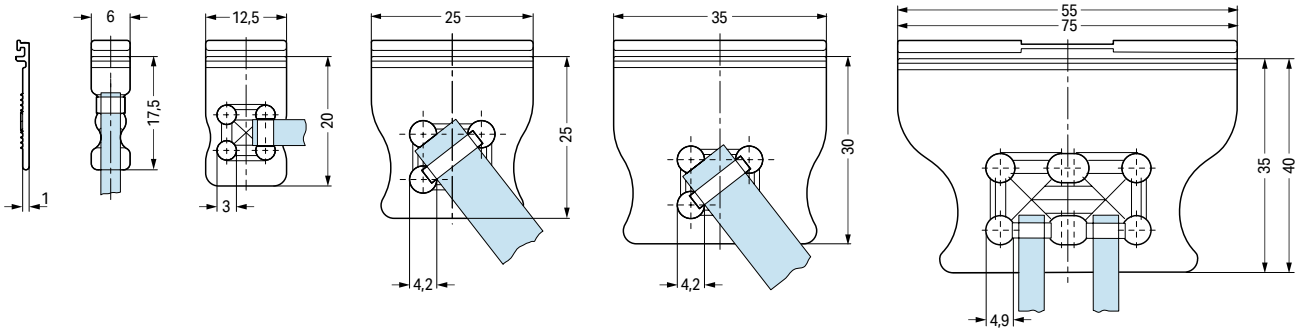

The arrangement of the attachments for cable ties allows single conductors or multi-core cables to be secured in different ways. The width of the cable ties must correspond to the hole dimensions of the strain relief plates shown above.

PU = packaging unit; SPU = subpackaging unit; Dimensions in mm

Strain relief plate

Mounting type: Insert

Suitable for standard male and female connectors (3.81 mm; 5.08 mm; 7.62 mm pin spacing) ▸ Color: orange



734-229

Width	Item No.	PU (SPU)
6 mm	**734-227**	100 (25)
12.5 mm	**734-228**	100 (25)
25 mm	**734-229**	100 (25)
35 mm	**734-226**	100 (25)
55 mm	**734-428**	50 (25)

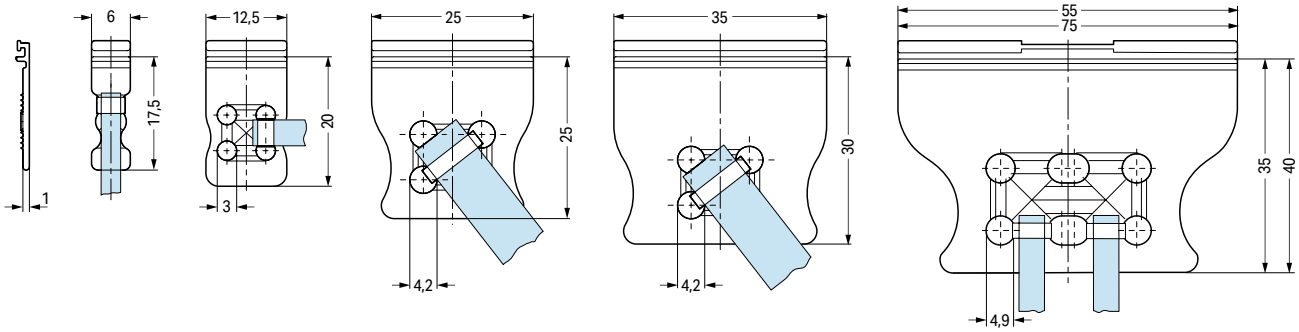

The arrangement of the attachments for cable ties allows single conductors or multi-core cables to be secured in different ways. The width of the cable ties must correspond to the hole dimensions of the strain relief plates shown above.

PU = packaging unit; SPU = subpackaging unit; Dimensions in mm

Strain relief plate

Mounting type: Insert

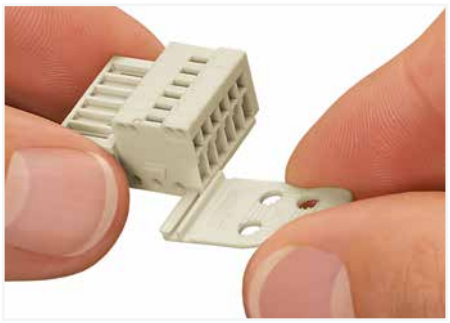

Strain relief plates for factory or in-the-field assembly



Strain relief plate, for factory assembly
1-conductor female connector, 2.5 mm pin spacing, light gray,
12-pole, with strain relief plate
733-112/034-000



Strain relief plate, for factory assembly
1-conductor female connector, 2.5 mm pin spacing, light gray,
2-pole, with strain relief plate (733-102/032-000)

Strain relief housing ▸ Suitable for standard male and female connectors

Pin spacing: 3.5 mm / 0.138 inches ▸ Color: light gray

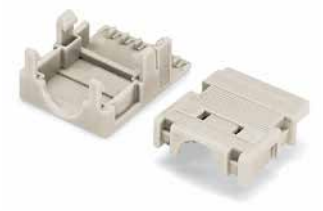

Width	Item No.	PU
10 mm	734-602	50
13.5 mm	734-603	25
17 mm	734-604	25
20.5 mm	734-605	25
24 mm	734-606	25
27.5 mm	734-607	25
31 mm	734-608	25
34.5 mm	734-609	25
38 mm	734-610	25
41.5 mm	734-611	25
45 mm	734-612	25

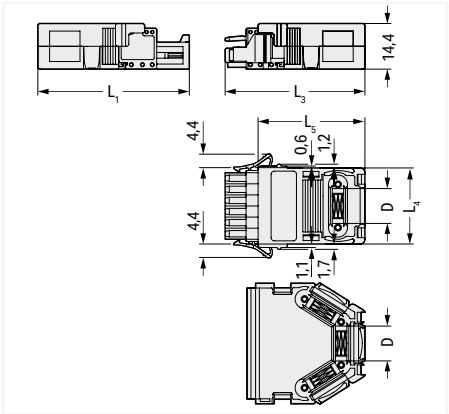

Strain Relief Housing Dimensions (in mm):					
Pole No.	L4	L3	L1	L5	D
2	10.0	43.1	46.8	32.7	5.0
3	13.5	43.1	46.8	32.7	8.5
4	17.0	43.1	46.8	32.7	8.5
5	20.5	43.1	46.8	32.7	8.5
6	24.0	44.1	47.8	33.7	11.5
7	27.5	44.1	47.8	33.7	11.5
8	31.0	44.1	47.8	33.7	11.5
9	34.5	44.1	47.8	33.7	11.5
10	38.0	53.1	56.8	42.7	11.5
11	41.5	53.1	56.8	42.7	11.5
12	45.0	53.1	56.8	42.7	11.5

Pin spacing: 3.81 mm / 0.15 inches ▸ Color: orange



Width	Item No.	PU
10.6 mm	734-632	50
14.4 mm	734-633	25
18.2 mm	734-634	25
22 mm	734-635	25
25.9 mm	734-636	25
33.5 mm	734-638	25
37.3 mm	734-639	25
41.1 mm	734-640	25
48.7 mm	734-642	25

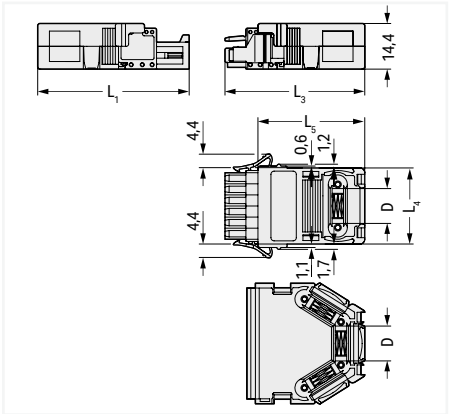

Strain Relief Housing Dimensions (in mm):					
Pole No.	L4	L3	L1	L5	D
2	10.6	43.1	46.8	32.7	5.0
3	14.4	43.1	46.8	32.7	8.5
4	18.2	43.1	46.8	32.7	8.5
5	22.0	43.1	46.8	32.7	8.5
6	25.9	44.1	47.8	33.7	11.5
8	33.5	44.1	47.8	33.7	11.5
9	37.3	44.1	47.8	33.7	11.5
10	41.1	53.1	56.8	42.7	11.5
12	48.7	53.1	56.8	42.7	11.5

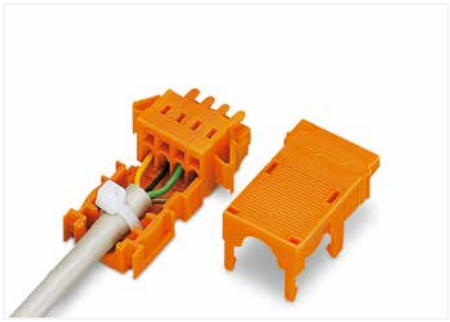

4-pole, 1-conductor female connector, with locking levers and strain relief housing (2- to 5-pole strain relief housing suitable only for cable ties)

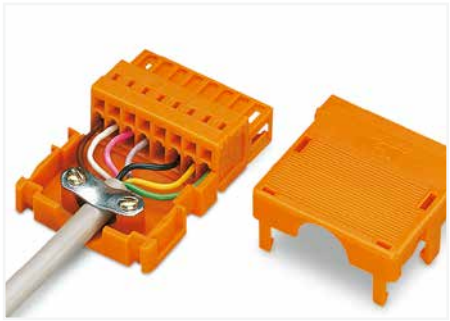

8-pole; 1-conductor male connector; with strain relief housing (6- to 12-pole strain relief housings suitable for cable clamp)

PU = packaging unit; SPU = subpackaging unit; Dimensions in mm

Jumper ▸ Jumper bar ▸ Suitable for female connectors with conductor connection and levers ▸ Color ▸ light gray



2734-402

Color	Pole number	Item No.	PU
◯ light gray	2	2734-402	25

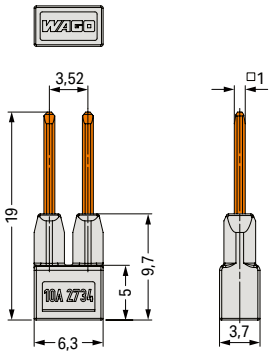

5

PU = packaging unit; SPU = subpackaging unit

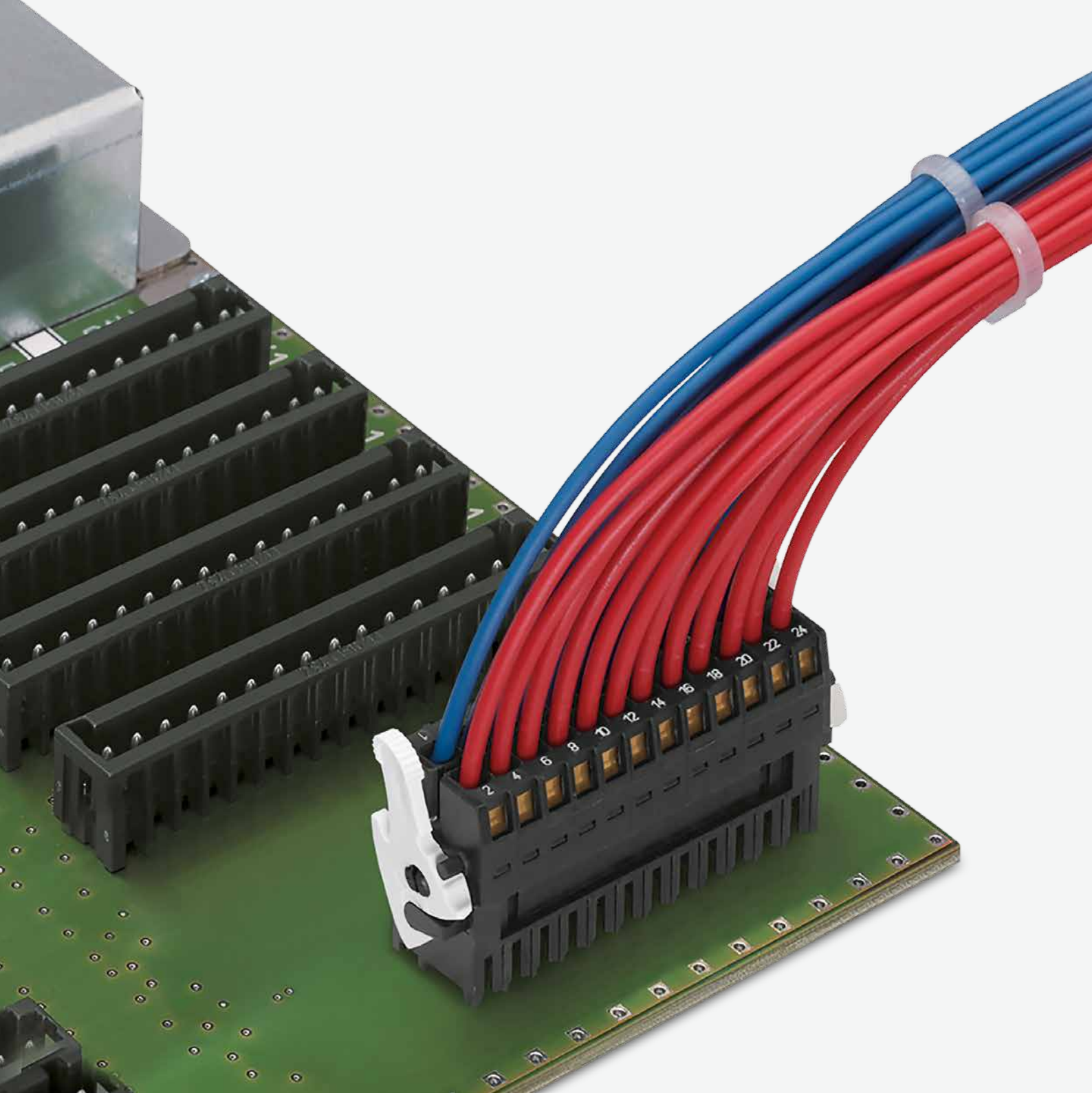

WAGO *MULTI CONNECTION SYSTEM*
MINI HD

WAGO *MULTI CONNECTION SYSTEM* MINI HD

Pin Spacing: 3.5 mm / Nominal Cross-Section: 1.5 mm²

		Page
	*MCS* MINI HD 2-Conductor Female Connectors ▸ Actuation type: Operating tool ▸ CAGE CLAMP®	516
	*MCS* MINI HD THT Male Header, 2-Rows	518
	THR Male Header, 2-Rows	524
	*MCS* MINI HD Panel feedthrough male connector	532
	*MCS* MINI HD Accessories	534
	Accessories and Tools	1063

6

CAGE CLAMP®

MCS **MINI HD**

Description and Installation

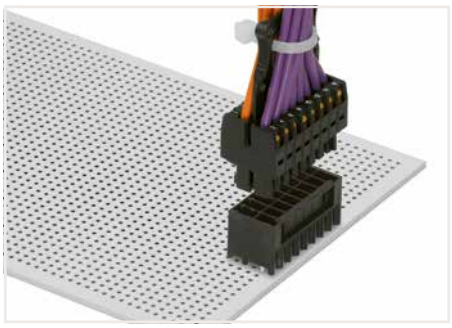

Centered strain relief plate anchors conductors for easy disconnection.

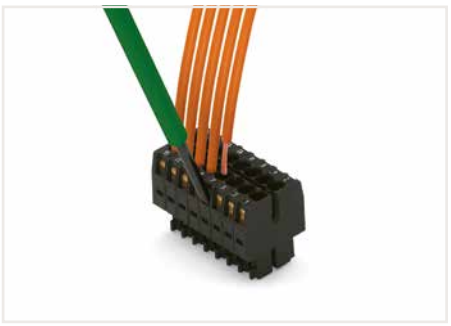

Inserting a conductor via (2.5 x 0.4) mm screwdriver.



Lever as a lock – when closed, female connector is locked.

6

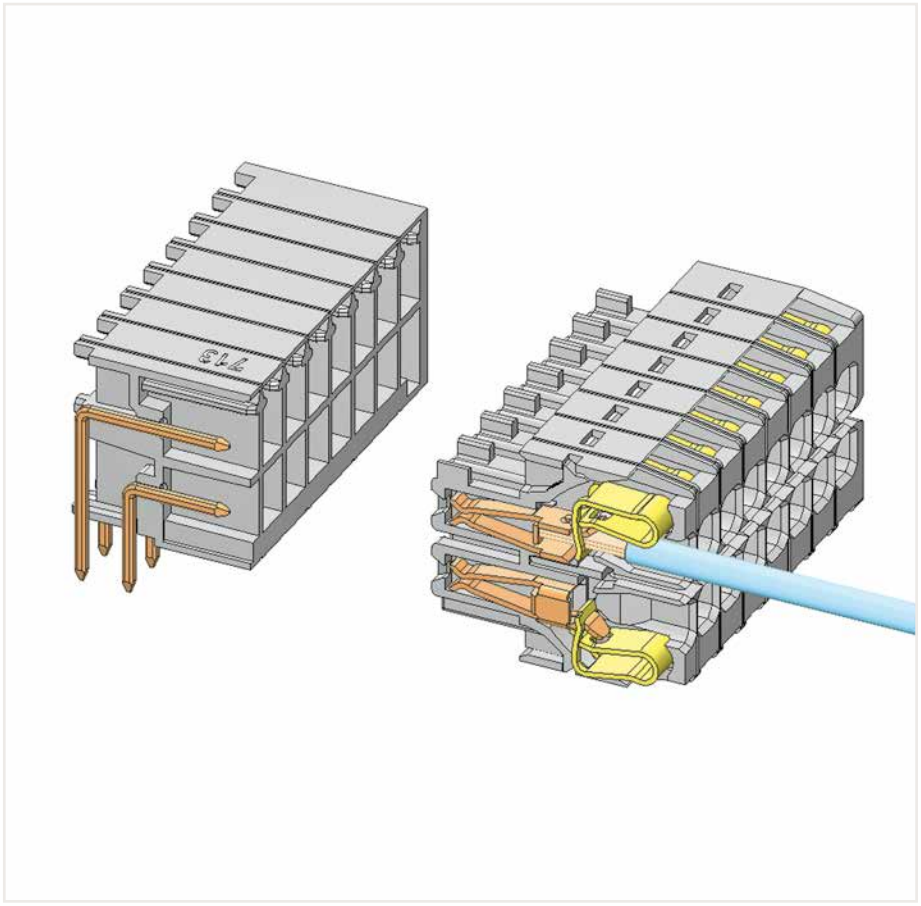

Pin spacing: 3.5 mm

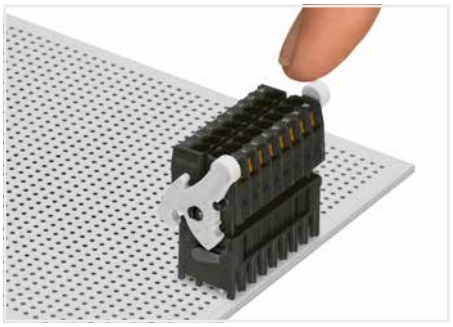

Lever as a disconnection aid – when opened, female connector is disconnected.
Rotating the lever lifts the female connector out of the male header.

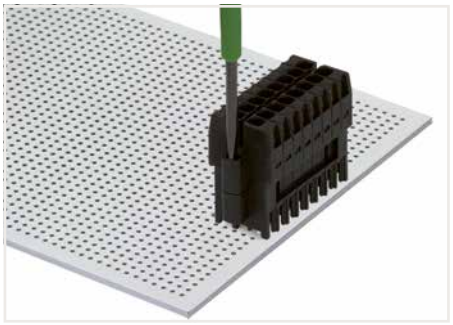

Screw interlock can only be disconnected using a tool.



Pole marking via self-adhesive strips or direct marking.

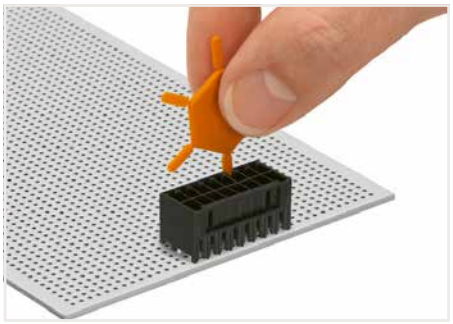

Coding a male header by inserting a coding pin.



Coding a female connector by removing coding finger(s).

1-conductor female connector, 2-row ▸ *MCS* MINI HD ▸ 713 Series

Pin spacing: 3.5 mm / 0.138 inches ▸ Actuation type: Operating tool ▸ CAGE CLAMP® ▸ Color: black

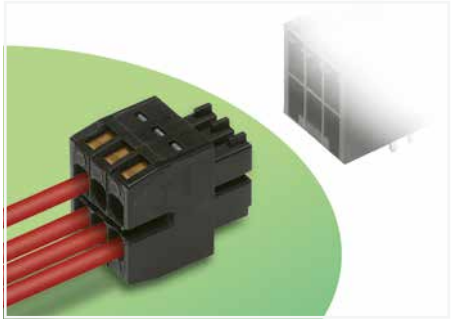

- Universal connection for all conductor types
- Unique, compact, double-row connector system for conductor cross-sections up to 1.5 mm²
- High-density, wire-to-board connections in very confined spaces
- Centered strain relief plate anchors conductors, while acting as convenient connection and disconnection handle. It also provides easy access to operating slots – even when wired.
- Coding fingers provide 100% protection against mismating

Derating Curve
1-conductor female connector (713-1103) with THT male header (713-1403)
Pin spacing: 3.5 mm / Conductor cross-section: 1.5 mm² "f-st"
Based on: EN 60512-5-2 / Reduction factor: 0.8

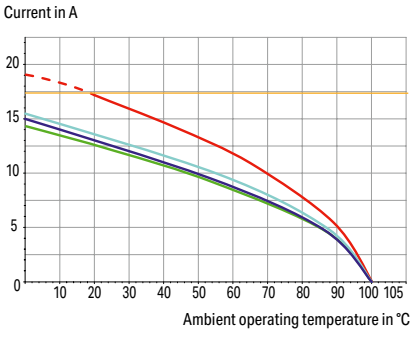

Electrical data			
Ratings per	**IEC/EN 60664-1**		
Overvoltage category	III	III	II
Pollution degree	3	2	2
Nominal voltage	80 V	160 V	250 V
Rated impulse withstand voltage	2.5 kV	2.5 kV	2.5 kV
Rated current	10 A	10 A	10 A
Approvals per	**UL 1059**		
Use group	B	C	D
Rated voltage	300 V	50 V	-
Rated current	10 A	10 A	-
Approvals per	**CSA**		
Use group	B	C	D
Rated voltage	300 V	-	-
Rated current	10 A	-	-

Connection Data	
Connection technology	CAGE CLAMP®
Strip length	6 … 7 mm / 0.24 … 0.28 inches
Solid conductor	0.08 … 1.5 mm² / 28 … 16 AWG
Fine-stranded conductor	0.08 … 1.5 mm² / 28 … 16 AWG
Fine-stranded conductor; with insulated ferrule	0.25 … 1 mm²
Fine-stranded conductor; with uninsulated ferrule	0.25 … 1 mm²

Material data	
Material group	II
Insulation material (main housing)	Glass fiber-reinforced polyamide (PA66 GF)
Flammability class per UL94	V0
Clamping spring material	Chrome-nickel spring steel (CrNi)
Contact material	Copper alloy
Contact Plating	Tin

Environmental requirements	
Limit temperature range	-60 … +100 °C
Processing temperature	-35 … +60 °C

Note:
The *MCS – MULTI CONNECTION SYSTEM* includes connectors without breaking capacity in accordance with DIN EN 61984. When used as intended, these connectors must not be connected/disconnected when live or under load.When used as intended, these connectors must not be connected/disconnected when live or under load. The circuit design should ensure header pins, which can be touched, are not live when unmated.

Ferrule	Page 1081
Stickers with operating instructions	Page 1069
Strain relief	Page 537
Tool	Page 1072
Direct marking	Page 534
See technical section for further information	
Approvals and corresponding ratings, visit www.wago.com	

1-conductor female connector, 2-row ▸ *MCS* MINI HD ▸ 713 Series

Pin spacing: 3.5 mm / 0.138 inches ▸ Actuation type: Operating tool ▸ CAGE CLAMP® ▸ Color: black



713-1108

Pole number	Item No.	PU (SPU)
4	713-1102	160
6	713-1103	100
8	713-1104	50
10	713-1105	50
12	713-1106	50
14	713-1107	50
16	713-1108	25
18	713-1109	25
20	713-1110	25
22	713-1111	25
24	713-1112	25
26	713-1113	25
28	713-1114	20
30	713-1115	20
32	713-1116	20
34	713-1117	20
36	713-1118	20 (18)

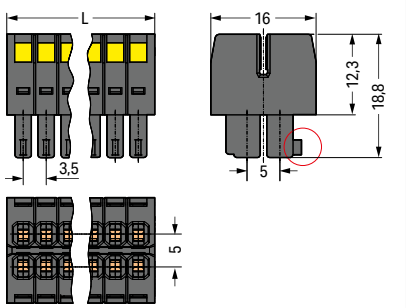

L = [(pole no./2) – 1] x pin spacing + 5.2 mm
Coding finger (red circle)

Locking of plug-in connection: Screw flange



713-1108/107-000

Pole number	Item No.	PU
4	713-1102/107-000	80
6	713-1103/107-000	50
8	713-1104/107-000	50
10	713-1105/107-000	25
12	713-1106/107-000	25
14	713-1107/107-000	25
16	713-1108/107-000	25
18	713-1109/107-000	25
20	713-1110/107-000	20
22	713-1111/107-000	20
24	713-1112/107-000	20
26	713-1113/107-000	20
28	713-1114/107-000	20
30	713-1115/107-000	20
32	713-1116/107-000	10
34	713-1117/107-000	10
36	713-1118/107-000	10

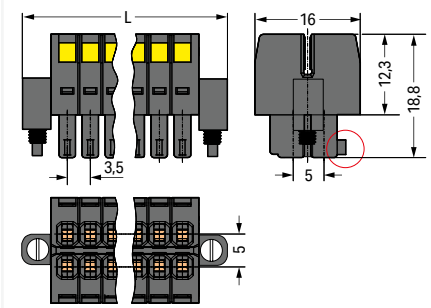

L = [(pole no./2) – 1] x pin spacing + 13.6 mm
Coding finger (red circle)

Locking of plug-in connection: Locking lever



713-1108/037-000

Pole number	Item No.	PU
4	713-1102/037-000	80
6	713-1103/037-000	50
8	713-1104/037-000	50
10	713-1105/037-000	50
12	713-1106/037-000	25
14	713-1107/037-000	25
16	713-1108/037-000	25
18	713-1109/037-000	25
20	713-1110/037-000	25
22	713-1111/037-000	20
24	713-1112/037-000	20
26	713-1113/037-000	20
28	713-1114/037-000	20
30	713-1115/037-000	20
32	713-1116/037-000	20
34	713-1117/037-000	10
36	713-1118/037-000	10

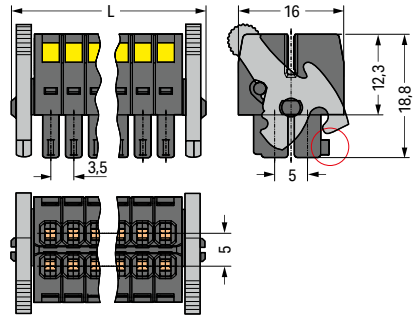

L = [(pole no./2) – 1] x pin spacing + 12.2 mm
Coding finger (red circle)

PU = packaging unit; SPU = subpackaging unit; Dimensions in mm

Variants:
- Other pole numbers
- Gold-plated or partially gold-plated contact surfaces
- Other versions (or variants) can be requested from WAGO Sales or configured at https://configurator.wago.com/.

THT male header, 2-row ▸ *MCS* MINI HD ▸ 713 Series

Pin spacing: 3.5 mm / 0.138 inches ▸ Solder pin dimensions: 0.8 x 0.8 mm ▸ Color: black



- Male headers may be mounted horizontally or vertically via straight or angled solder pins
- Header housing is molded of THT-compatible insulation material for lead-free reflow soldering
- Separated pin slots prevent damage and make the headers touch-proof when unplugged
- 100% protected against mismating
- Coding option available

Derating Curve
1-conductor female connector (713-1103) with
THT male header (713-1403)
Pin spacing: 3.5 mm / Conductor cross-section: 1.5 mm² "f-st"
Based on: EN 60512-5-2 / Reduction factor: 0.8

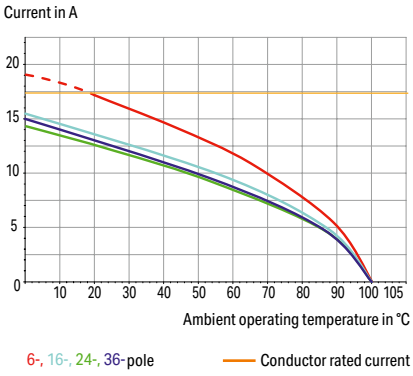

Electrical data			
Ratings per	**IEC/EN 60664-1**		
Overvoltage category	III	III	II
Pollution degree	3	2	2
Nominal voltage	80 V	160 V	250 V
Rated impulse withstand voltage	2.5 kV	2.5 kV	2.5 kV
Rated current	10 A	10 A	10 A
Approvals per	**UL 1059**		
Use group	B	C	D
Rated voltage	150 V	50 V	-
Rated current	10 A	10 A	-
Approvals per	**CSA**		
Use group	B	C	D
Rated voltage	150 V	-	-
Rated current	12 A	-	-

Material data	
Material group	I
Insulation material (main housing)	Polyphthalamide (PPA GF)
Flammability class per UL94	V0
Contact material	Electrolytic copper (E_{Cu})
Contact Plating	Tin

Mechanical data	
Solder pin arrangement	over the entire male connector (in-line)
Number of solder pins per potential	1
Solder pin length	3.8 mm
Solder pin dimensions	0.8 x 0.8 mm
Drilled hole diameter	1.2 $^{(+0.1)}$ mm

Environmental requirements	
Limit temperature range	-60 … +100 °C
Processing temperature	-35 … +60 °C

Note:
The *MCS – MULTI CONNECTION SYSTEM* includes connectors without breaking capacity in accordance with DIN EN 61984. When used as intended, these connectors must not be connected/disconnected when live or under load.When used as intended, these connectors must not be connected/disconnected when live or under load. The circuit design should ensure header pins, which can be touched, are not live when unmated.

Coding Page 536

See technical section for further information

Approvals and corresponding ratings, visit www.wago.com

THT male header, 2-row ▸ *MCS* MINI HD ▸ 713 Series

Pin spacing: 3.5 mm / 0.138 inches ▸ Solder pin dimensions: 0.8 x 0.8 mm ▸ Color: black

Mating direction to the PCB: 0 °



713-1428

Pole number	Item No.	PU
4	713-1422	160
6	713-1423	100
8	713-1424	50
10	713-1425	50
12	713-1426	50
14	713-1427	50
16	713-1428	25
18	713-1429	25
20	713-1430	25
22	713-1431	25
24	713-1432	25
26	713-1433	25
28	713-1434	20
30	713-1435	20
32	713-1436	20
34	713-1437	20
36	713-1438	20

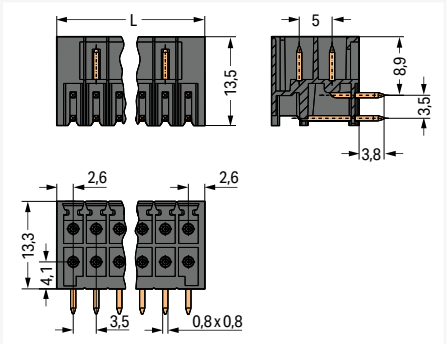

L = [(pole no./2) – 1] x pin spacing + 5.2 mm

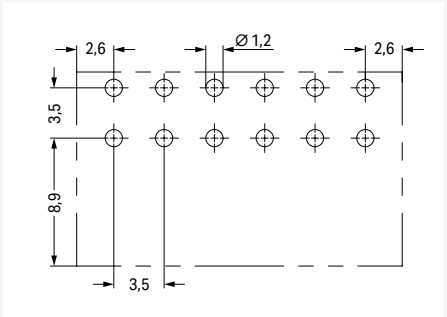

Mating direction to the PCB: 90 °



713-1408

Pole number	Item No.	PU
4	713-1402	160
6	713-1403	100
8	713-1404	50
10	713-1405	50
12	713-1406	50
14	713-1407	50
16	713-1408	25
18	713-1409	25
20	713-1410	25
22	713-1411	25
24	713-1412	25
26	713-1413	25
28	713-1414	20
30	713-1415	20
32	713-1416	20
34	713-1417	20
36	713-1418	20

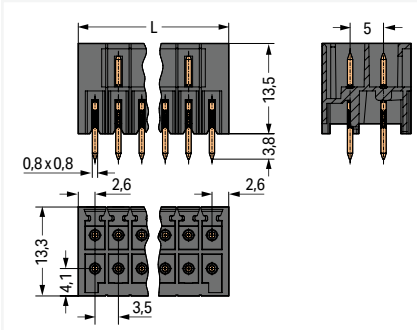

L = [(pole no./2) – 1] x pin spacing + 5.2 mm

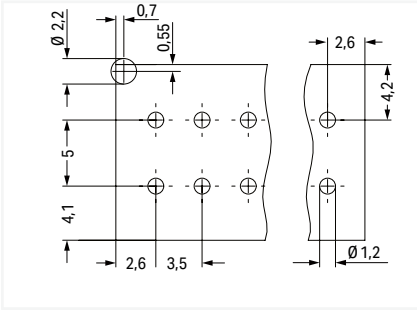

Locking of plug-in connection: Threaded flange ▸ Mating direction to the PCB: 0 °



713-1428/107-000

Pole number	Item No.	PU
4	713-1422/107-000	80
6	713-1423/107-000	50
8	713-1424/107-000	50
10	713-1425/107-000	25
12	713-1426/107-000	25
14	713-1427/107-000	25
16	713-1428/107-000	25
18	713-1429/107-000	25
20	713-1430/107-000	20
22	713-1431/107-000	20
24	713-1432/107-000	20
26	713-1433/107-000	20
28	713-1434/107-000	20
30	713-1435/107-000	20
32	713-1436/107-000	10
34	713-1437/107-000	10
36	713-1438/107-000	10

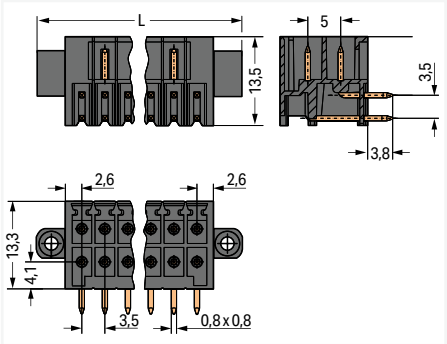

L = [(pole no./2) – 1] x pin spacing + 13.6 mm

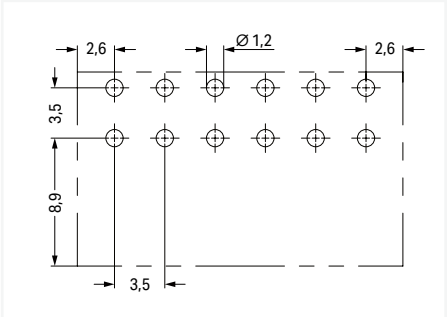

PU = packaging unit; SPU = subpackaging unit; Dimensions in mm

Variants:

- Other pole numbers
- Other solder pin lengths
- Gold-plated or partially gold-plated contact surfaces
- Other versions (or variants) can be requested from WAGO Sales or configured at https://configurator.wago.com/.

THT male header, 2-row ▸ *MCS* MINI HD ▸ 713 Series

Pin spacing: 3.5 mm / 0.138 inches ▸ Solder pin dimensions: 0.8 x 0.8 mm ▸ Color: black

Locking of plug-in connection: Threaded flange ▸ Mating direction to the PCB: 90 °



713-1408/107-000

Pole number	Item No.	PU
4	713-1402/107-000	80
6	713-1403/107-000	50
8	713-1404/107-000	50
10	713-1405/107-000	25
12	713-1406/107-000	25
14	713-1407/107-000	25
16	713-1408/107-000	25
18	713-1409/107-000	25
20	713-1410/107-000	20
22	713-1411/107-000	20
24	713-1412/107-000	20
26	713-1413/107-000	20
28	713-1414/107-000	20
30	713-1415/107-000	20
32	713-1416/107-000	10
34	713-1417/107-000	10
36	713-1418/107-000	10

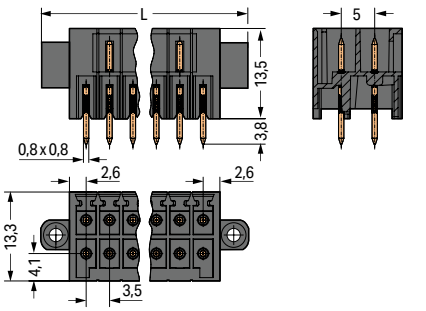

L = [(pole no./2) – 1] x pin spacing + 13.6 mm

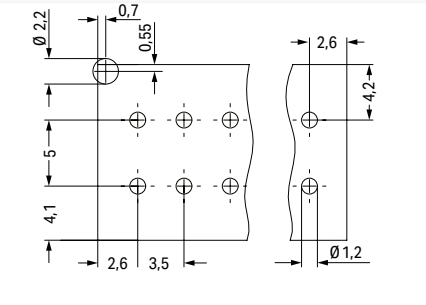

Locking of plug-in connection: Locking lever ▸ Mating direction to the PCB: 0 °



713-1428/037-000

Pole number	Item No.	PU
4	713-1422/037-000	80
6	713-1423/037-000	50
8	713-1424/037-000	50
10	713-1425/037-000	50
12	713-1426/037-000	25
14	713-1427/037-000	25
16	713-1428/037-000	25
18	713-1429/037-000	25
20	713-1430/037-000	25
22	713-1431/037-000	20
24	713-1432/037-000	20
26	713-1433/037-000	20
28	713-1434/037-000	20
30	713-1435/037-000	20
32	713-1436/037-000	20
34	713-1437/037-000	10
36	713-1438/037-000	10

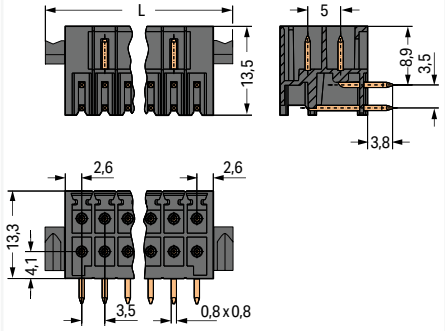

L = [(pole no./2) – 1] x pin spacing + 11.6 mm

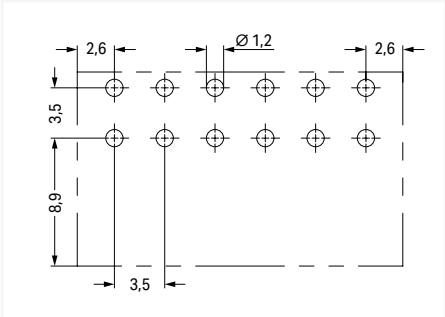

Locking of plug-in connection: Locking lever ▸ Mating direction to the PCB: 90 °



713-1408/037-000

Pole number	Item No.	PU
4	713-1402/037-000	80
6	713-1403/037-000	50
8	713-1404/037-000	50
10	713-1405/037-000	50
12	713-1406/037-000	25
14	713-1407/037-000	25
16	713-1408/037-000	25
18	713-1409/037-000	25
20	713-1410/037-000	25
22	713-1411/037-000	20
24	713-1412/037-000	20
26	713-1413/037-000	20
28	713-1414/037-000	20
30	713-1415/037-000	20
32	713-1416/037-000	20
34	713-1417/037-000	10
36	713-1418/037-000	10

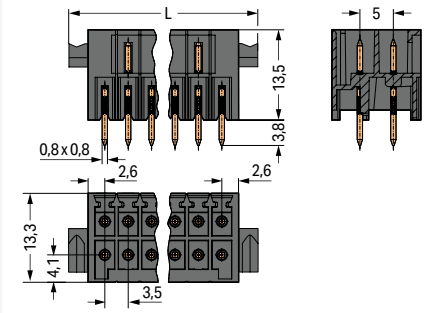

L = [(pole no./2) – 1] x pin spacing + 11.6 mm

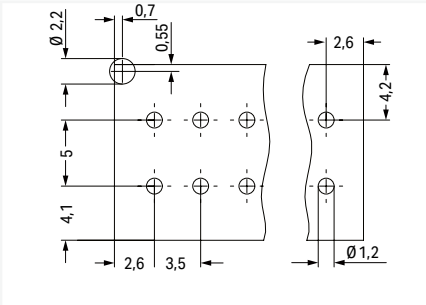

PU = packaging unit; SPU = subpackaging unit; Dimensions in mm

Variants:

- Other pole numbers
- Other solder pin lengths
- Gold-plated or partially gold-plated contact surfaces
- Other versions (or variants) can be requested from WAGO Sales or configured at https://configurator.wago.com/.

THR (Through-Hole Reflow) Soldering Process



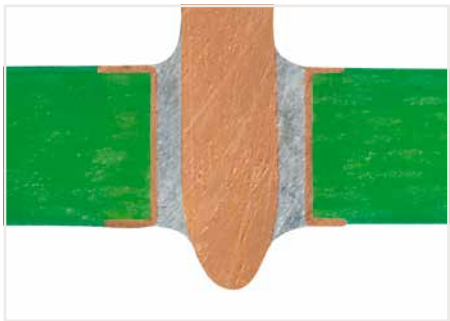

By using high-temperature-resistant plastic and a streamlined pin design, WAGO's THR male headers and PCB terminal blocks meet requirements for SMT process capability while maintaining the necessary stability. Both headers and terminal blocks are simply pushed into the solder paste-filled PCB holes and then soldered along with the SMT components via reflow soldering. The previous wave soldering process is no longer necessary. The result is a perfect connection – both mechanically and electrically.



Terminal strips with an additional suction pad in tape-and-reel packaging per IEC 60286-3
WAGO recommends both a temperature profile that adheres to EN 61760-1 and the use of forced convection ovens for processing THR components.

1

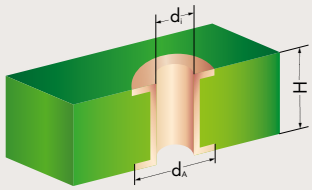

Metal-plated PCB bore hole

2

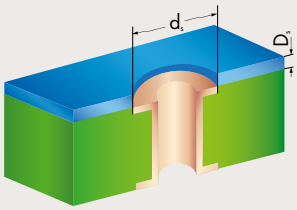

SMD positioning pattern

3

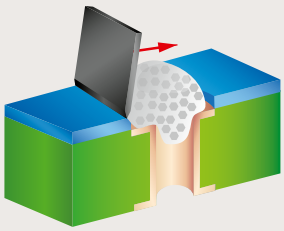

Solder paste application

Series	d_i (mm)	d_A (mm)	H (mm)	d_s (mm)	D_s (µm)	d (mm)	L (mm)
218	$1.1^{+0.1}$	1.9	< 2	1.8	150	0.9	2.8
231 (1 x 1 mm)	$1.4^{+0.1}$	2.5	< 2	2.4	150	1.2	2.4
231 (1.2 x 1.2 mm)	$1.7^{+0.1}$	2.8	< 2	2.7	150	1.5	2.4
236	$1.1^{+0.1}$	2.2	< 2	2.1	150	0.9	3.6
250	$1.1^{+0.1}$	2.0	< 2	1.9	150	0.9	2.4
713	$1.0^{+0.1}$	1.9	< 2	1.8	150	1.0	2.4
733	$1.2^{+0.1}$	1.9	< 2	1.8	150	1.0	2.4
734	$1.4^{+0.1}$	2.5	< 2	2.4	150	1.2	2.4
2060	$1.5^{+0.1}$	2.4	< 2	2.3	150	1.25	2.4
2061	$1.5^{+0.1}$	2.4	< 2	2.3	150	1.25	1.5 / 2.4
2086	$1.0^{+0.1}$	2.0	< 2	1.9	150	0.85	1.5 / 2.4

d_i: Plated through-hole diameter
d_A: Outer diameter of metal-plated PCB hole*
H: PCB thickness
d_s: Pattern hole diameter
D_s: Pattern thickness
d: Pin diagonal
L: Pin length

* When laying out the metal-plated bore holes, the clearance and creepage distance requirements – as specified in the equipment standards – must be considered.

Solder pin form

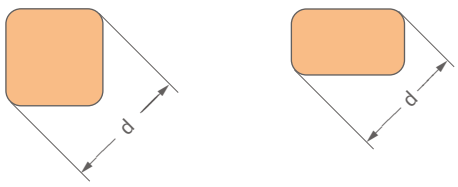

4

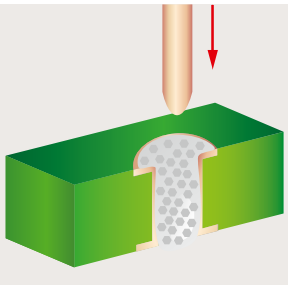

Component assembly, automatic/by hand

5

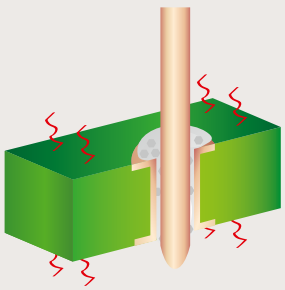

Reflow soldering process

6

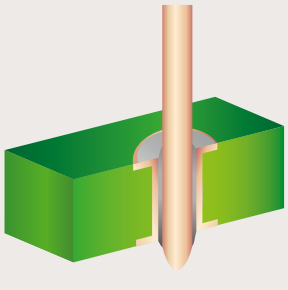

THR soldering joint

THR male header, 2-row ▸ *MCS* MINI HD ▸ 713 Series

Pin spacing: 3.5 mm / 0.138 inches ▸ Solder pin dimensions: 0.8 x 0.8 mm ▸ Color: black



- THR male headers for reflow soldering in SMT applications
- Available in tape-and-reel packaging for automated pick-and-place PCB assembly
- Separated pin slots prevent damage and make the headers touch-proof when unplugged
- 100% protected against mismating
- Coding option available

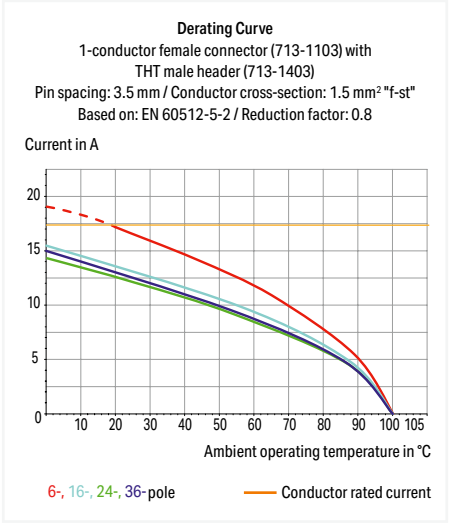

Electrical data			
Ratings per	**IEC/EN 60664-1**		
Overvoltage category	III	III	II
Pollution degree	3	2	2
Nominal voltage	80 V	160 V	250 V
Rated impulse withstand voltage	2.5 kV	2.5 kV	2.5 kV
Rated current	10 A	10 A	10 A
Approvals per	**UL 1059**		
Use group	B	C	D
Rated voltage	150 V	50 V	-
Rated current	10 A	10 A	-
Approvals per	**CSA**		
Use group	B	C	D
Rated voltage	150 V	-	-
Rated current	12 A	-	-

Material data	
Material group	I
Insulation material (main housing)	Polyphthalamide (PPA GF)
Flammability class per UL94	V0
Contact material	Electrolytic copper (E_{Cu})
Contact Plating	Tin

Mechanical data	
Solder pin arrangement	over the entire male connector (in-line)
Number of solder pins per potential	1
Solder pin dimensions	0.8 x 0.8 mm
Plated through-hole diameter (THR)	1.3 $^{(+0.1)}$ mm

Environmental requirements	
Limit temperature range	-60 … +100 °C
Processing temperature	-35 … +60 °C

Note:
The *MCS – MULTI CONNECTION SYSTEM* includes connectors without breaking capacity in accordance with DIN EN 61984. When used as intended, these connectors must not be connected/disconnected when live or under load.When used as intended, these connectors must not be connected/disconnected when live or under load. The circuit design should ensure header pins, which can be touched, are not live when unmated.

THR soldering	Page 522
Coding	Page 536
See technical section for further information	
Approvals and corresponding ratings, visit www.wago.com	

THR male header, 2-row ▸ *MCS* MINI HD ▸ 713 Series

Pin spacing: 3.5 mm / 0.138 inches ▸ Solder pin dimensions: 0.8 x 0.8 mm ▸ Color: black

Mating direction to the PCB: 0 °

Suitable for automated assembly



713-1428/105-000



713-1431/105-000/997-407

Pole number	Item No.	PU
4	713-1422/105-000	160
6	713-1423/105-000	100
8	713-1424/105-000	50
10	713-1425/105-000	50
12	713-1426/105-000	50
14	713-1427/105-000	50
16	713-1428/105-000	25
18	713-1429/105-000	25
20	713-1430/105-000	25
22	713-1431/105-000	25
24	713-1432/105-000	25
26	713-1433/105-000	25
28	713-1434/105-000	20
30	713-1435/105-000	20
32	713-1436/105-000	20
34	713-1437/105-000	20
36	713-1438/105-000	20

Pole number	Tape width	Item No.	PU
6	32 mm	713-1423/105-000/997-405	120
8	32 mm	713-1424/105-000/997-405	120
10	32 mm	713-1425/105-000/997-405	120
12	44 mm	713-1426/105-000/997-406	120
14	44 mm	713-1427/105-000/997-406	120
16	44 mm	713-1428/105-000/997-406	120
18	56 mm	713-1429/105-000/997-407	120
20	56 mm	713-1430/105-000/997-407	120
22	56 mm	713-1431/105-000/997-407	120
24	72 mm	713-1432/105-000/997-408	120
26	72 mm	713-1433/105-000/997-408	120
28	72 mm	713-1434/105-000/997-408	120
30	72 mm	713-1435/105-000/997-408	120
32	72 mm	713-1436/105-000/997-408	120
34	88 mm	713-1437/105-000/997-409	120
36	88 mm	713-1438/105-000/997-409	120

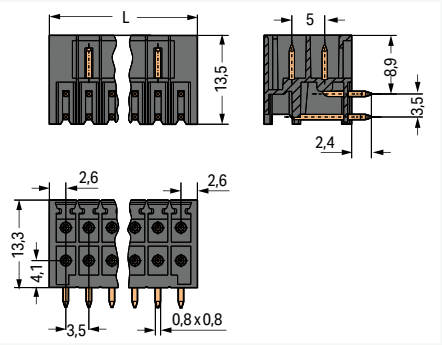

L = [(pole no./2) – 1] x pin spacing + 5.2 mm

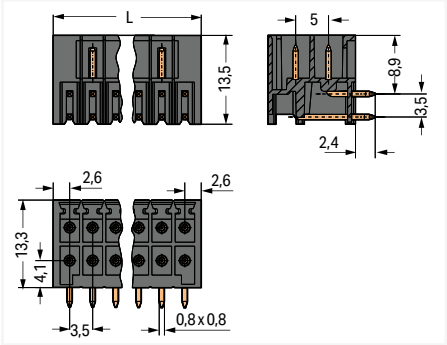

L = [(pole no./2) – 1] x pin spacing + 5.2 mm

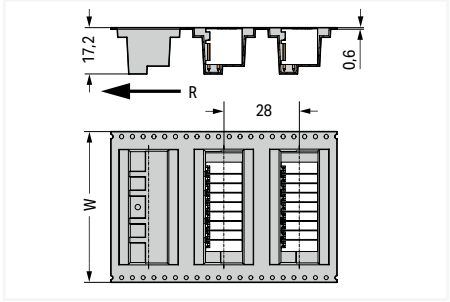

W = tape width
R = feed direction

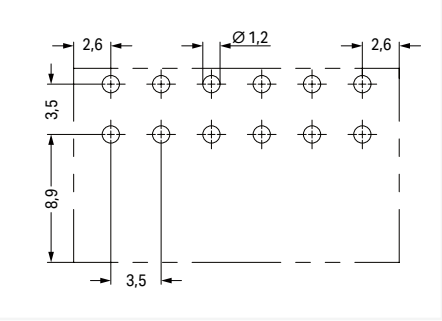

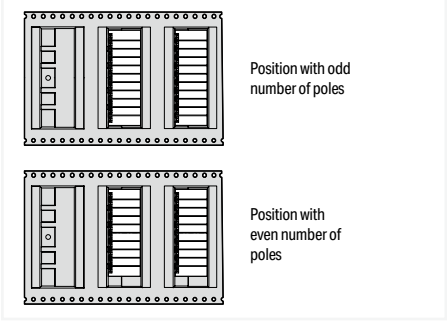

Pin position in tape-and-reel packaging

PU = packaging unit; SPU = subpackaging unit; Dimensions in mm

Variants:

- Other pole numbers
- Other solder pin lengths
- Gold-plated or partially gold-plated contact surfaces
- Other versions (or variants) can be requested from WAGO Sales or configured at https://configurator.wago.com/.

THR male header, 2-row ▸ *MCS* MINI HD ▸ 713 Series

Pin spacing: 3.5 mm / 0.138 inches ▸ Solder pin dimensions: 0.8 x 0.8 mm ▸ Color: black

Mating direction to the PCB: 90 °

Suitable for automated assembly



713-1408/105-000



713-1412/105-000/997-408

Pole number	Item No.	PU
4	713-1402/105-000	160
6	713-1403/105-000	100
8	713-1404/105-000	50
10	713-1405/105-000	50
12	713-1406/105-000	50
14	713-1407/105-000	50
16	713-1408/105-000	25
18	713-1409/105-000	25
20	713-1410/105-000	25
22	713-1411/105-000	25
24	713-1412/105-000	25
26	713-1413/105-000	25
28	713-1414/105-000	20
30	713-1415/105-000	20
32	713-1416/105-000	20
34	713-1417/105-000	20
36	713-1418/105-000	20

Pole number	Tape width	Item No.	PU
6	32 mm	713-1403/105-000/997-405	120
8	32 mm	713-1404/105-000/997-405	120
10	32 mm	713-1405/105-000/997-405	120
12	44 mm	713-1406/105-000/997-406	120
14	44 mm	713-1407/105-000/997-406	120
16	44 mm	713-1408/105-000/997-406	120
18	56 mm	713-1409/105-000/997-407	120
20	56 mm	713-1410/105-000/997-407	120
22	56 mm	713-1411/105-000/997-407	120
24	72 mm	713-1412/105-000/997-408	120
26	72 mm	713-1413/105-000/997-408	120
28	72 mm	713-1414/105-000/997-408	120
30	72 mm	713-1415/105-000/997-408	120
32	72 mm	713-1416/105-000/997-408	120
34	88 mm	713-1417/105-000/997-409	120
36	88 mm	713-1418/105-000/997-409	120

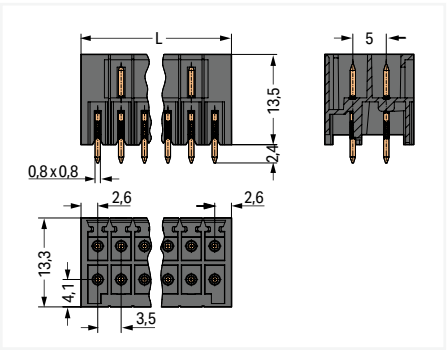

L = [(pole no./2) – 1] x pin spacing + 5.2 mm

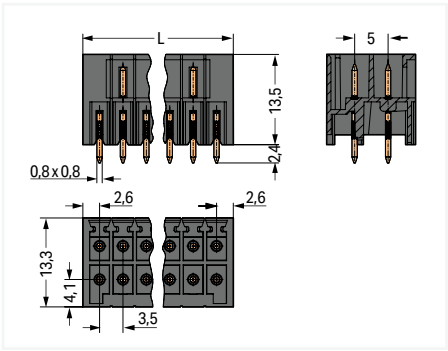

L = [(pole no./2) – 1] x pin spacing + 5.2 mm

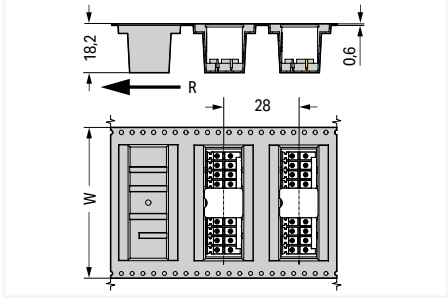

W = tape width
R = feed direction

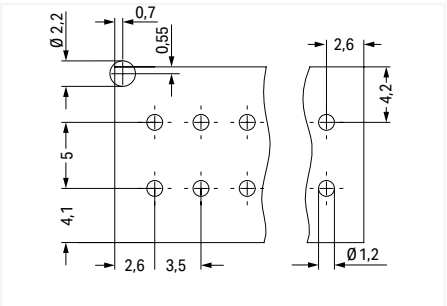

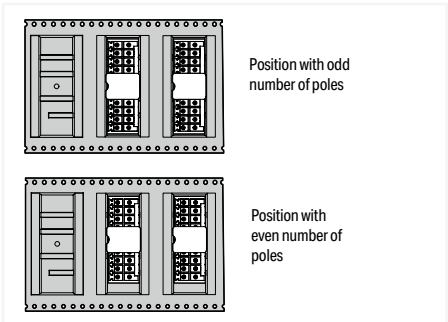

Pin position in tape-and-reel packaging

PU = packaging unit; SPU = subpackaging unit; Dimensions in mm

Variants:
- Other pole numbers
- Other solder pin lengths
- Gold-plated or partially gold-plated contact surfaces
- Other versions (or variants) can be requested from WAGO Sales or configured at https://configurator.wago.com/.

THR male header, 2-row ▸ *MCS* MINI HD ▸ 713 Series

Pin spacing: 3.5 mm / 0.138 inches ▸ Solder pin dimensions: 0.8 x 0.8 mm ▸ Color: black

Locking of plug-in connection: Threaded flange ▸ Mating direction to the PCB: 0 °

Suitable for automated assembly



713-1428/117-000



713-1429/117-000/997-407

Pole number	Item No.	PU
4	713-1422/117-000	80
6	713-1423/117-000	50
8	713-1424/117-000	50
10	713-1425/117-000	25
12	713-1426/117-000	25
14	713-1427/117-000	25
16	713-1428/117-000	25
18	713-1429/117-000	25
20	713-1430/117-000	20
22	713-1431/117-000	20
24	713-1432/117-000	20
26	713-1433/117-000	20
28	713-1434/117-000	20
30	713-1435/117-000	20
32	713-1436/117-000	10
34	713-1437/117-000	10
36	713-1438/117-000	10

Pole number	Tape width	Item No.	PU
6	32 mm	713-1423/117-000/997-405	120
8	44 mm	713-1424/117-000/997-406	120
10	44 mm	713-1425/117-000/997-406	120
12	44 mm	713-1426/117-000/997-406	120
14	56 mm	713-1427/117-000/997-407	120
16	56 mm	713-1428/117-000/997-407	120
18	56 mm	713-1429/117-000/997-407	120
20	72 mm	713-1430/117-000/997-408	120
22	72 mm	713-1431/117-000/997-408	120
24	72 mm	713-1432/117-000/997-408	120
26	72 mm	713-1433/117-000/997-408	120
28	72 mm	713-1434/117-000/997-408	120
30	88 mm	713-1435/117-000/997-409	120
32	88 mm	713-1436/117-000/997-409	120
34	88 mm	713-1437/117-000/997-409	120
36	88 mm	713-1438/117-000/997-409	120

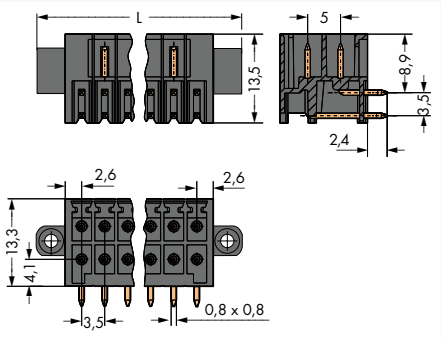

L = [(pole no./2) – 1] x pin spacing + 13.6 mm

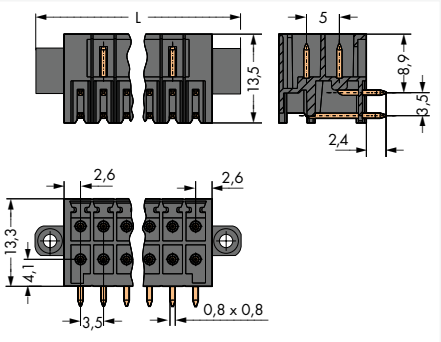

L = [(pole no./2) – 1] x pin spacing + 13.6 mm

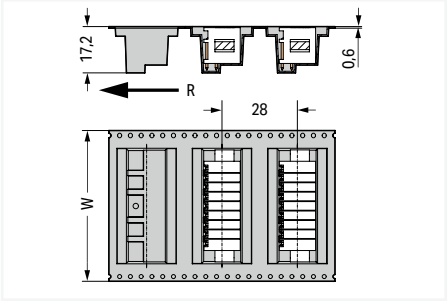

W = tape width
R = feed direction

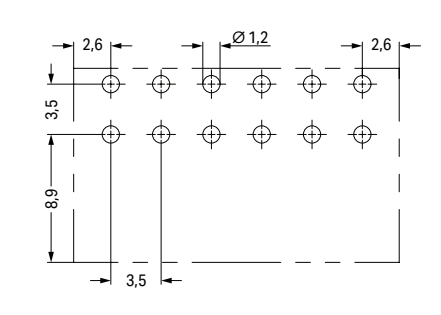

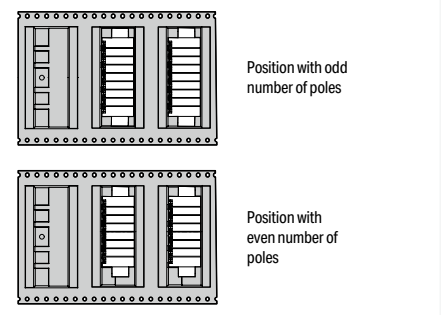

Pin position in tape-and-reel packaging

PU = packaging unit; SPU = subpackaging unit; Dimensions in mm

Variants:

- Other pole numbers
- Other solder pin lengths
- Gold-plated or partially gold-plated contact surfaces
- Other versions (or variants) can be requested from WAGO Sales or configured at https://configurator.wago.com/.

THR male header, 2-row ▸ *MCS* MINI HD ▸ 713 Series

Pin spacing: 3.5 mm / 0.138 inches ▸ Solder pin dimensions: 0.8 x 0.8 mm ▸ Color: black

Locking of plug-in connection: Threaded flange ▸ Mating direction to the PCB: 90 °

Suitable for automated assembly



713-1408/117-000



713-1409/117-000/997-407

Pole number	Item No.	PU
4	713-1402/117-000	80
6	713-1403/117-000	50
8	713-1404/117-000	50
10	713-1405/117-000	25
12	713-1406/117-000	25
14	713-1407/117-000	25
16	713-1408/117-000	25
18	713-1409/117-000	25
20	713-1410/117-000	20
22	713-1411/117-000	20
24	713-1412/117-000	20
26	713-1413/117-000	20
28	713-1414/117-000	20
30	713-1415/117-000	20
32	713-1416/117-000	10
34	713-1417/117-000	10
36	713-1418/117-000	10

Pole number	Tape width	Item No.	PU
6	32 mm	713-1403/117-000/997-405	120
8	44 mm	713-1404/117-000/997-406	120
10	44 mm	713-1405/117-000/997-406	120
12	44 mm	713-1406/117-000/997-406	120
14	56 mm	713-1407/117-000/997-407	120
16	56 mm	713-1408/117-000/997-407	120
18	56 mm	713-1409/117-000/997-407	120
20	72 mm	713-1410/117-000/997-408	120
22	72 mm	713-1411/117-000/997-408	120
24	72 mm	713-1412/117-000/997-408	120
26	72 mm	713-1413/117-000/997-408	120
28	72 mm	713-1414/117-000/997-408	120
30	88 mm	713-1415/117-000/997-409	120
32	88 mm	713-1416/117-000/997-409	120
34	88 mm	713-1417/117-000/997-409	120
36	88 mm	713-1418/117-000/997-409	120

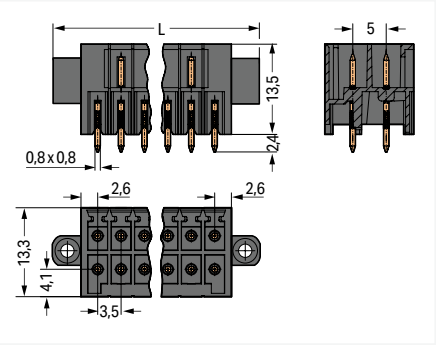

L = [(pole no./2) – 1] x pin spacing + 13.6 mm

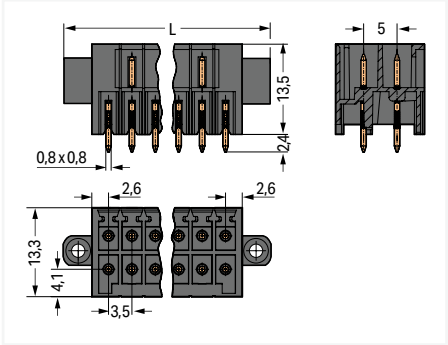

L = [(pole no./2) – 1] x pin spacing + 13.6 mm

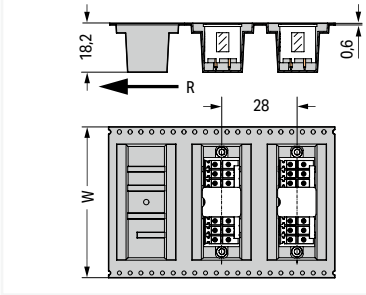

W = tape width
R = feed direction

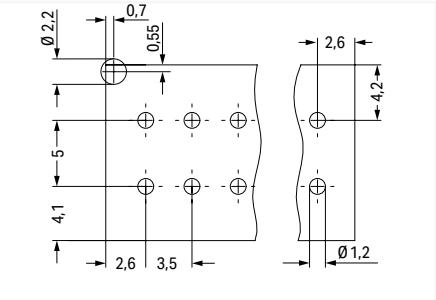

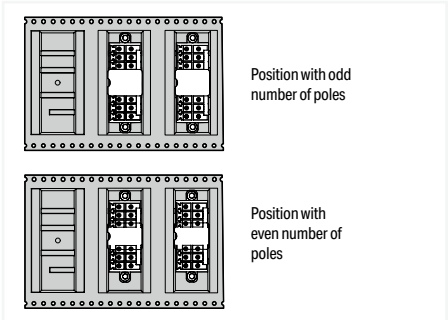

Pin position in tape-and-reel packaging

PU = packaging unit; SPU = subpackaging unit; Dimensions in mm

Variants:
- Other pole numbers
- Other solder pin lengths
- Gold-plated or partially gold-plated contact surfaces
- Other versions (or variants) can be requested from WAGO Sales or configured at https://configurator.wago.com/.

THR male header, 2-row ▸ *MCS* MINI HD ▸ 713 Series

Pin spacing: 3.5 mm / 0.138 inches ▸ Solder pin dimensions: 0.8 x 0.8 mm ▸ Color: black

Locking of plug-in connection: Locking lever ▸ Mating direction to the PCB: 0 °

Suitable for automated assembly



713-1428/116-000



713-1429/116-000/997-407

Pole number	Item No.	PU
4	713-1422/116-000	80
6	713-1423/116-000	50
8	713-1424/116-000	50
10	713-1425/116-000	50
12	713-1426/116-000	50
14	713-1427/116-000	50
16	713-1428/116-000	25
18	713-1429/116-000	25
20	713-1430/116-000	25
22	713-1431/116-000	20
24	713-1432/116-000	20
26	713-1433/116-000	20
28	713-1434/116-000	20
30	713-1435/116-000	20
32	713-1436/116-000	20
34	713-1437/116-000	10
36	713-1438/116-000	10

Pole number	Tape width	Item No.	PU
6	32 mm	713-1423/116-000/997-405	120
8	44 mm	713-1424/116-000/997-406	120
10	44 mm	713-1425/116-000/997-406	120
12	44 mm	713-1426/116-000/997-406	120
14	56 mm	713-1427/116-000/997-407	120
16	56 mm	713-1428/116-000/997-407	120
18	56 mm	713-1429/116-000/997-407	120
20	72 mm	713-1430/116-000/997-408	120
22	72 mm	713-1431/116-000/997-408	120
24	72 mm	713-1432/116-000/997-408	120
26	72 mm	713-1433/116-000/997-408	120
28	72 mm	713-1434/116-000/997-408	120
30	88 mm	713-1435/116-000/997-409	120
32	88 mm	713-1436/116-000/997-409	120
34	88 mm	713-1437/116-000/997-409	120
36	88 mm	713-1438/116-000/997-409	120

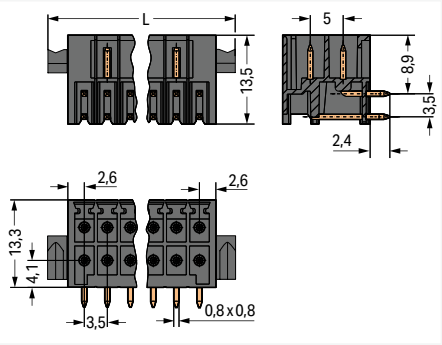

L = [(pole no./2) – 1] x pin spacing + 11.6 mm

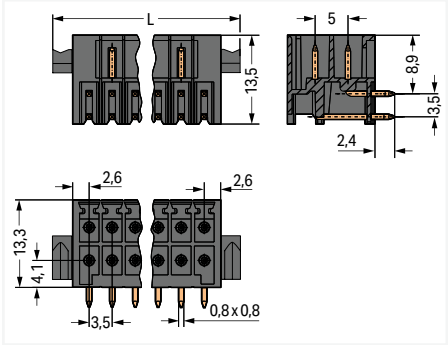

L = [(pole no./2) – 1] x pin spacing + 11.6 mm

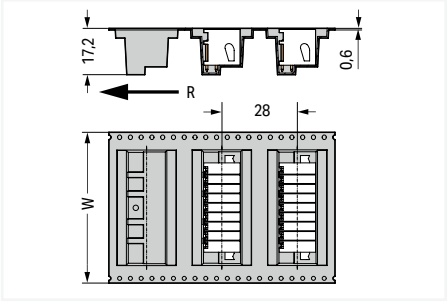

W = tape width
R = feed direction

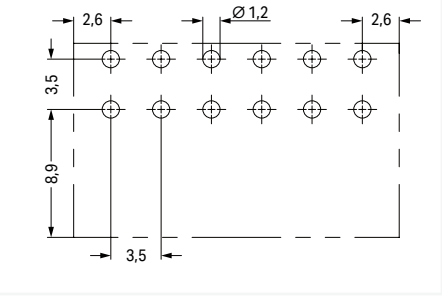

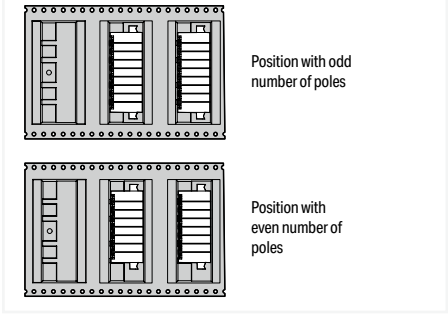

Pin position in tape-and-reel packaging

PU = packaging unit; SPU = subpackaging unit; Dimensions in mm

Variants:

- Other pole numbers
- Other solder pin lengths
- Gold-plated or partially gold-plated contact surfaces
- Other versions (or variants) can be requested from WAGO Sales or configured at https://configurator.wago.com/.

THR male header, 2-row ▸ *MCS* MINI HD ▸ 713 Series

Pin spacing: 3.5 mm / 0.138 inches ▸ Solder pin dimensions: 0.8 x 0.8 mm ▸ Color: black

Locking of plug-in connection: Locking lever ▸ Mating direction to the PCB: 90 °

Suitable for automated assembly



713-1408/116-000



713-1409/116-000/997-407

Pole number	Item No.	PU
4	713-1402/116-000	80
6	713-1403/116-000	50
8	713-1404/116-000	50
10	713-1405/116-000	50
12	713-1406/116-000	25
14	713-1407/116-000	25
16	713-1408/116-000	25
18	713-1409/116-000	25
20	713-1410/116-000	25
22	713-1411/116-000	20
24	713-1412/116-000	20
26	713-1413/116-000	20
28	713-1414/116-000	20
30	713-1415/116-000	20
32	713-1416/116-000	20
34	713-1417/116-000	10
36	713-1418/116-000	10

Pole number	Tape width	Item No.	PU
6	32 mm	713-1403/116-000/997-405	120
8	44 mm	713-1404/116-000/997-406	120
10	44 mm	713-1405/116-000/997-406	120
12	44 mm	713-1406/116-000/997-406	120
14	56 mm	713-1407/116-000/997-407	120
16	56 mm	713-1408/116-000/997-407	120
18	56 mm	713-1409/116-000/997-407	120
20	72 mm	713-1410/116-000/997-408	120
22	72 mm	713-1411/116-000/997-408	120
24	72 mm	713-1412/116-000/997-408	120
26	72 mm	713-1413/116-000/997-408	120
28	72 mm	713-1414/116-000/997-408	120
30	88 mm	713-1415/116-000/997-409	120
32	88 mm	713-1416/116-000/997-409	120
34	88 mm	713-1417/116-000/997-409	120
36	88 mm	713-1418/116-000/997-409	120

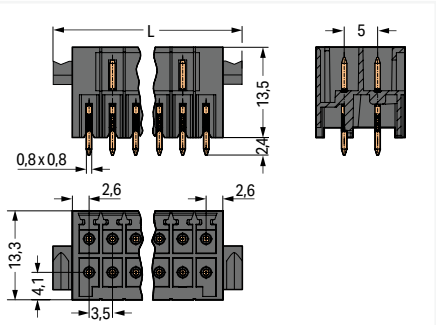

L = [(pole no./2) – 1] x pin spacing + 11.6 mm

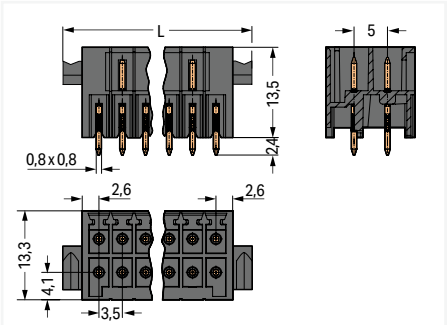

L = [(pole no./2) – 1] x pin spacing + 11.6 mm

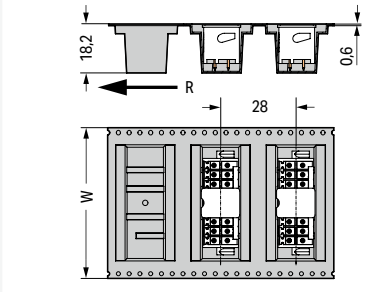

W = tape width
R = feed direction

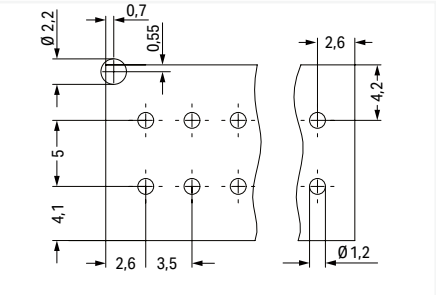

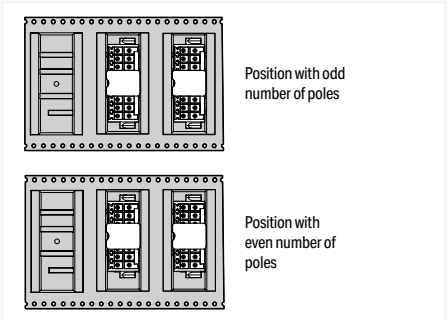

Pin position in tape-and-reel packaging

PU = packaging unit; SPU = subpackaging unit; Dimensions in mm

Variants:
- Other pole numbers
- Other solder pin lengths
- Gold-plated or partially gold-plated contact surfaces
- Other versions (or variants) can be requested from WAGO Sales or configured at https://configurator.wago.com/.

Panel feedthrough male connector ▸ *MCS* MINI HD ▸ 713 Series

Pin spacing: 3.5 mm / 0.138 inches ▸ Mounting type: DIN-35 rail ▸ Color: black



Electrical data				
Ratings per		**IEC/EN 60664-1**		
Overvoltage category	III	III	II	
Pollution degree	3	2	2	
Nominal voltage	80 V	160 V	250 V	
Rated impulse withstand voltage	2.5 kV	2.5 kV	2.5 kV	
Rated current	10 A	10 A	10 A	
Approvals per		**UL 1059**		
Use group	B	C	D	
Rated voltage	300 V	50 V	-	
Rated current	10 A	10 A	-	
Approvals per		**CSA**		
Use group	B	C	D	
Rated voltage	300 V	-	-	
Rated current	10 A	-	-	
Material data				
Material group	I			
Insulation material (main housing)	Glass fiber-reinforced polyamide (PA66 GF)			
Flammability class per UL94	V0			
Contact material	Electrolytic copper (E_{Cu})			
Contact Plating	Tin			
Environmental requirements				
Limit temperature range	-60 … +100 °C			
Processing temperature	-35 … +60 °C			

Note:
The *MCS – MULTI CONNECTION SYSTEM* includes connectors without breaking capacity in accordance with DIN EN 61984. When used as intended, these connectors must not be connected/disconnected when live or under load.When used as intended, these connectors must not be connected/disconnected when live or under load. The circuit design should ensure header pins, which can be touched, are not live when unmated.

See technical section for further information

Approvals and corresponding ratings, visit www.wago.com

Panel feedthrough male connector ▸ *MCS* MINI HD ▸ 713 Series

Pin spacing: 3.5 mm / 0.138 inches ▸ Mounting type: DIN-35 rail ▸ Color: black





Pole number	Item No.	PU
24	713-1492/037-000	20

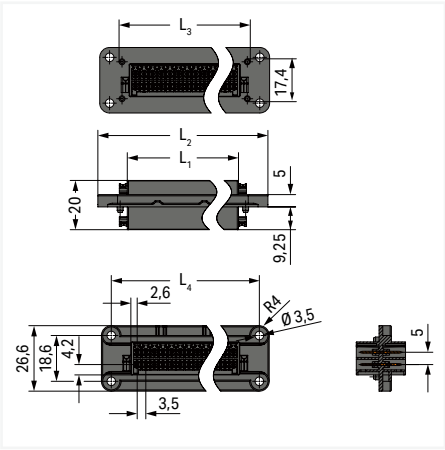

L_1 = [(pole no./2) – 1] x pin spacing + 5.2 mm
L_2 = L_1 + 23.9 mm
L_3 = L_1 + 8.2 mm
L_4 = L_1 + 15.9 mm

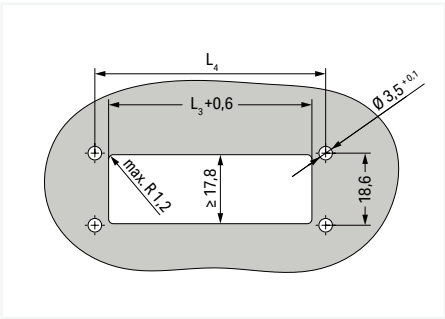

L_3 = [(pole no./2) – 1] x pin spacing + 5.2 mm + 8.2 mm
L_4 = [(pole no./2) – 1] x pin spacing + 5.2 mm + 15.9 mm

PU = packaging unit; SPU = subpackaging unit

Direct Marking

MCS MINI HD







713 Series Female Connectors can be marked with "1 ... pole no." via factory direct marking.

Two standard marking orientations are available:
1. Marking perpendicular to conductor entry
2. Marking parallel to conductor entry

Other custom marking options are available upon request.

WAGO recommends pole marking on the PCB for male headers with solder pins (713 Series).

The marking type is always defined by the second 4-digit block of the item no. suffix for items with standard colors and materials.

Example: 713-1110/. . . - xxxx
xxxx = Item no. suffix for direct marking

Direct marking of 1-conductor female connectors, perpendicular to conductor entry, 1 ... pole no., item no. suffix.: /. . . - 047	
Version	**Item No. Example**
1-conductor female connector, double-row, 16-pole, black	713-1108/000-047
1-conductor female connector, with screw flanges, double-row,16-pole, black	713-1108/0107-047
1-conductor female connector, with levers and strain relief plate, double-row, 16-pole, black	713-1108/037-047/033-000

Direct marking of 1-conductor female connectors, parallel to conductor entry, 1 ... pole no., item no. suffix.: /. . . - 9037	
Version	**Item No. Example**
1-conductor female connector, double-row, 16-pole, black	713-1108/000-9037
1-conductor female connector, with levers, double-row, 16-pole, black	13-1108/037-9037
1-conductor female connector, with strain relief plate, double-row, 16-pole, black	713-1108/033-9037

Coding ▸ Coding pin carrier with 6 coding pins ▸ Suitable for male connectors ▸ Color: orange



714-101

Color	Item No.	PU (SPU)
orange	**714-101**	100 (25)

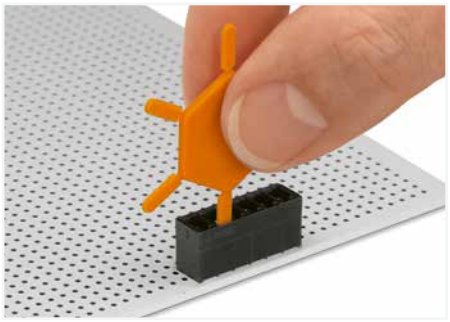

Coding a male header by inserting a coding pin. (*MCS* MINI SL)



Coding a female connector by removing coding finger(s). (*MCS* MINI SL)

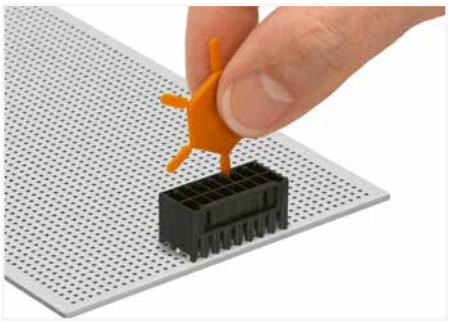

Coding a male header by inserting a coding pin. (*MCS* MINI HD)



Coding a female connector by removing coding finger(s). (*MCS* MINI HD)

PU = packaging unit; SPU = subpackaging unit

Strain relief plate ▸ Pin spacing: 3.5 mm / 0.138 inches ▸ Suitable for standard female connectors ▸ Color: black



Width	Item No.	PU (SPU)
11 mm	**713-126**	100 (25)
18 mm	**713-130**	100 (25)
25 mm	**713-127**	100 (25)
39 mm	**713-128**	100 (25)
53 mm	**713-129**	100 (25)

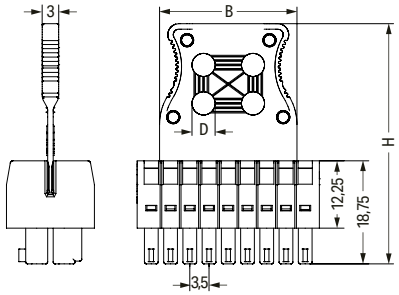

Pole No.	B	H	D
6 ... 8	11	38,7	3
10 ... 12	18	43,7	4,2
14 ... 20	25	43,7	4,2
22 ... 28	39	48,7	4,2
30 ... 36	53	54,2	4,9

The arrangement of the attachments for cable ties allows single conductors or multi-core cables to be secured in different ways. The width of the cable ties must correspond to the hole dimensions of the strain relief plates shown above.

Cable ties and binding tools are not offered by WAGO.

PU = packaging unit; SPU = subpackaging unit; Dimensions in mm

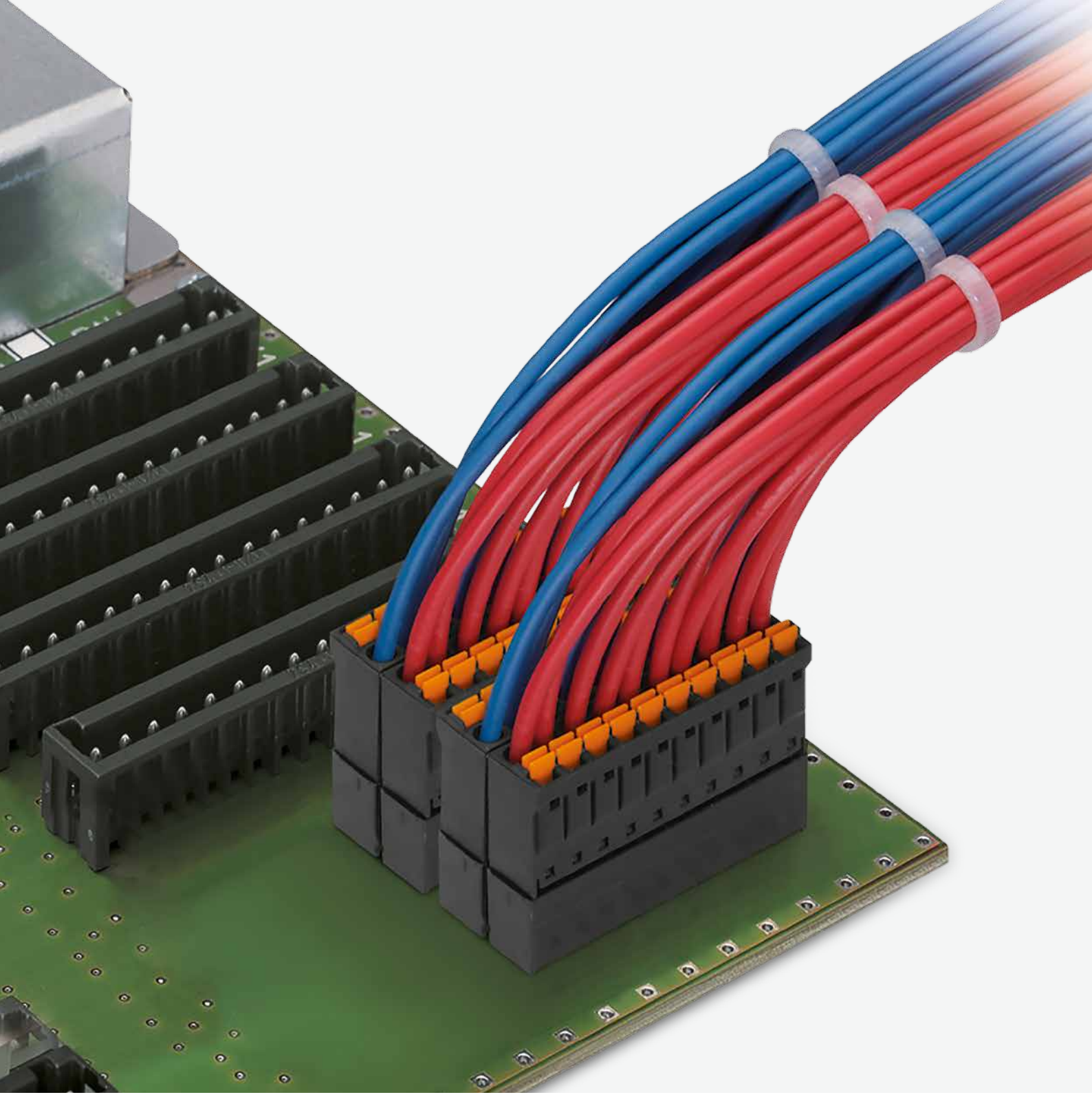

WAGO *MULTI CONNECTION SYSTEM*
MINI SL

WAGO *MULTI CONNECTION SYSTEM* MINI SL

Pin Spacing: 3.5 mm / Nominal Cross-Section: 1.5 mm²

		Page
	*MCS* MINI SL 1-Conductor Female Connectors ▸ Actuation type: Push-button ▸ Push-in CAGE CLAMP®	542
	*MCS* MINI SL THT Male Headers	544
	*MCS* MINI SL Accessories	546
	Accessories and Tools	1063

7

PUSH-IN CAGE CLAMP®

MCS **MINI SL**

Description and Installation

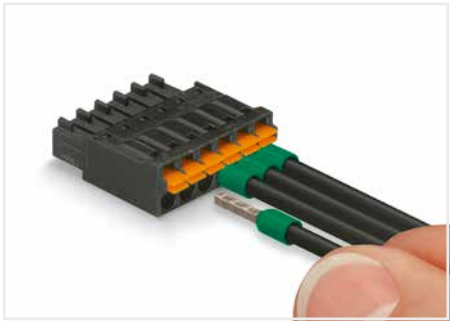

Terminating solid and ferruled conductors via push-in termination.

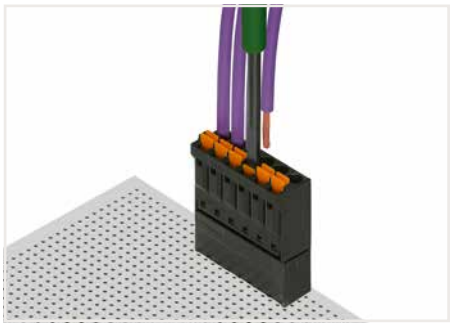

Inserting/removing fine-stranded conductors via push-button.

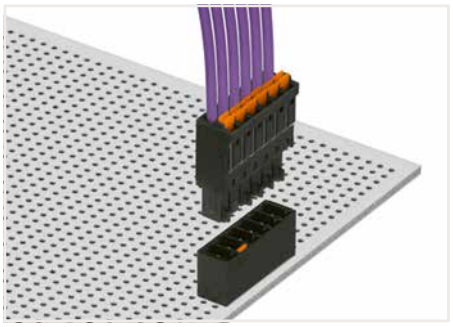

Coded connectors.

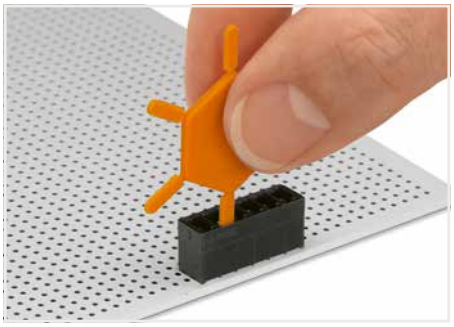

Coding a male header by inserting a coding pin.



Coding a female connector by removing coding finger(s).

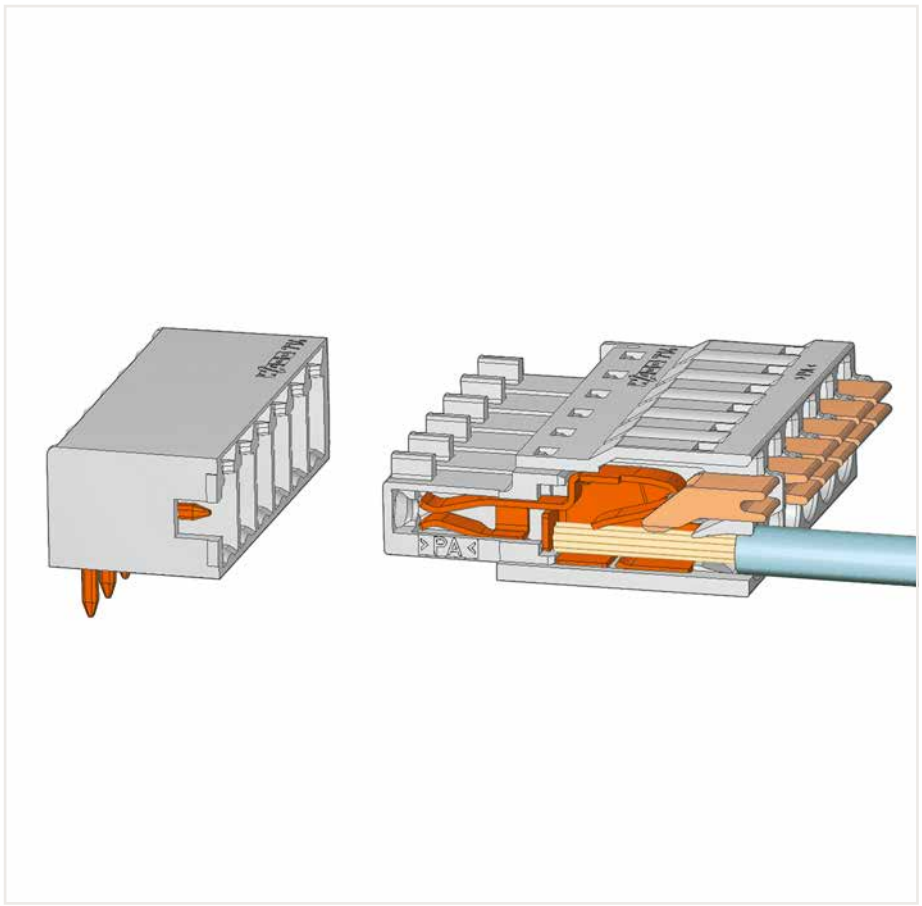

Pin spacing: 3.5 mm



Pole marking via factory direct marking.

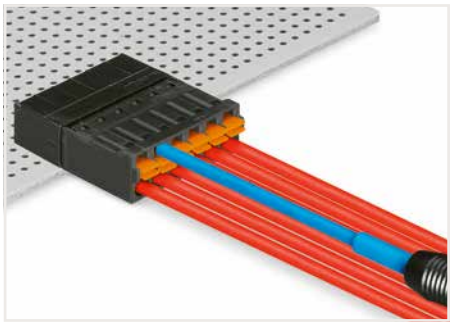

Testing via 1 mm Ø test pin – insertion parallel to conductor entry.

1-conductor female connector ▸ *MCS* MINI SL ▸ 714 Series

Pin spacing: 3.5 mm / 0.138 inches ▸ Actuation type: Push-button ▸ Push-in CAGE CLAMP® ▸ Color: black

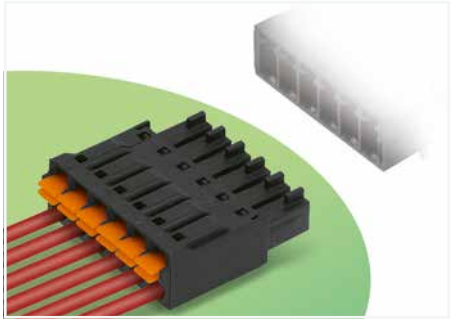

- Female connectors terminate both solid and ferruled conductors via push-in termination
- Integrated push-buttons provide convenient, tool-free operation
- Ultra-low profile of just 7.8 mm for conductor cross-section up to 1.5 mm²
- With coding fingers and test points

Electrical data				
Ratings per	**IEC/EN 60664-1**			
Overvoltage category	III	III	II	
Pollution degree	3	2	2	
Nominal voltage	160 V	160 V	320 V	
Rated impulse withstand voltage	2.5 kV	2.5 kV	2.5 kV	
Rated current	8 A	8 A	8 A	
Approvals per	**UL 1059**			
Use group	B	C	D	
Rated voltage	150 V	-	-	
Rated current	8 A	-	-	

Connection Data	
Connection technology	Push-in CAGE CLAMP®
Strip length	9 … 10 mm / 0.35 … 0.39 inches
Solid conductor	0.2 … 1.5 mm² / 24 … 16 AWG
Fine-stranded conductor	0.2 … 1.5 mm² / 24 … 16 AWG
Fine-stranded conductor; with insulated ferrule	0.25 … 0.75 mm²
Fine-stranded conductor; with uninsulated ferrule	0.25 … 1.5 mm²

Material data	
Material group	I
Insulation material (main housing)	Polyamide (PA66)
Flammability class per UL94	V0
Clamping spring material	Chrome-nickel spring steel (CrNi)
Contact material	Copper alloy
Contact Plating	Tin

Environmental requirements	
Limit temperature range	-60 … +100 °C
Processing temperature	-35 … +60 °C

Note:
The *MCS – MULTI CONNECTION SYSTEM* includes connectors without breaking capacity in accordance with DIN EN 61984. When used as intended, these connectors must not be connected/disconnected when live or under load.When used as intended, these connectors must not be connected/disconnected when live or under load. The circuit design should ensure header pins, which can be touched, are not live when unmated.

Test and measurement	Page 1088
Tool	Page 1072
See technical section for further information	
Approvals and corresponding ratings, visit www.wago.com	

1-conductor female connector ▸ *MCS* MINI SL ▸ 714 Series

Pin spacing: 3.5 mm / 0.138 inches ▸ Actuation type: Push-button ▸ Push-in CAGE CLAMP® ▸ Color: black



714-106

Pole number	Item No.	PU
2	**714-102**	200
3	**714-103**	200
4	**714-104**	200
5	**714-105**	100
6	**714-106**	100
8	**714-108**	100
10	**714-110**	100
12	**714-112**	100
14	**714-114**	50
15	**714-115**	50
16	**714-116**	50

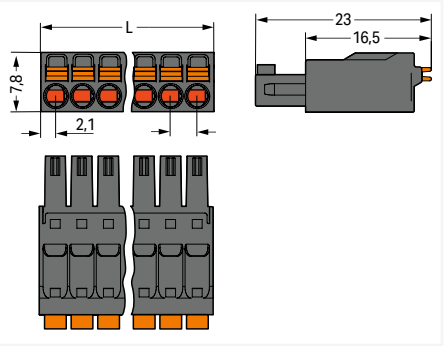

L = (pole no. – 1) x pin spacing + 4.2 mm

PU = packaging unit; SPU = subpackaging unit; Dimensions in mm

Variants:
- Other pole numbers
- Other versions (or variants) can be requested from WAGO Sales or configured at https://configurator.wago.com/.

THT male header ▸ *MCS* MINI SL ▸ 714 Series

Pin spacing: 3.5 mm / 0.138 inches ▸ Solder pin dimensions: 0.8 x 0.8 mm ▸ Color: black

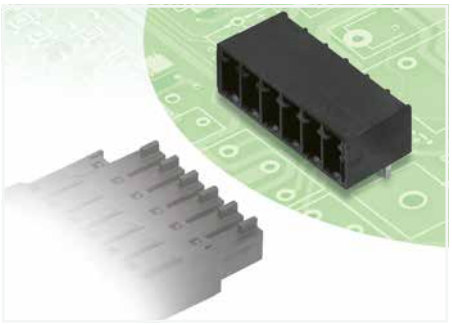

- Male headers may be mounted horizontally or vertically via straight or angled solder pins
- Header housing is molded of THR-compatible insulation material for lead-free Reflow soldering
- Separated pin slots prevent damage and make the headers touch-proof when unplugged
- Coding option available

Electrical data			
Ratings per	**IEC/EN 60664-1**		
Overvoltage category	III	III	II
Pollution degree	3	2	2
Nominal voltage	160 V	160 V	320 V
Rated impulse withstand voltage	2.5 kV	2.5 kV	2.5 kV
Rated current	8 A	8 A	8 A
Approvals per	**UL 1059**		
Use group	B	C	D
Rated voltage	150 V	-	-
Rated current	8 A	-	-

Material data	
Material group	I
Insulation material (main housing)	Polyphthalamide (PPA GF)
Flammability class per UL94	V0
Contact material	Electrolytic copper (E_{Cu})
Contact Plating	Tin
Mechanical data	
Solder pin arrangement	over the entire male connector (in-line)
Number of solder pins per potential	1
Solder pin length	3.4 mm
Solder pin dimensions	0.8 x 0.8 mm
Drilled hole diameter	1.2 $^{(+0.1)}$ mm
Environmental requirements	
Limit temperature range	-60 … +100 °C
Processing temperature	-35 … +60 °C

Note:
The *MCS – MULTI CONNECTION SYSTEM* includes connectors without breaking capacity in accordance with DIN EN 61984. When used as intended, these connectors must not be connected/disconnected when live or under load.When used as intended, these connectors must not be connected/disconnected when live or under load. The circuit design should ensure header pins, which can be touched, are not live when unmated.

Coding Page 546

See technical section for further information

Approvals and corresponding ratings, visit www.wago.com

THT male header ▸ *MCS* MINI SL ▸ 714 Series

Pin spacing: 3.5 mm / 0.138 inches ▸ Solder pin dimensions: 0.8 x 0.8 mm ▸ Color: black

Mating direction to the PCB: 0 °



714-166

Pole number	Item No.	PU
2	714-162	200
3	714-163	200
4	714-164	200
5	714-165	200
6	714-166	200
8	714-168	200
10	714-170	100
12	714-172	100
14	714-174	100
15	714-175	100
16	714-176	100

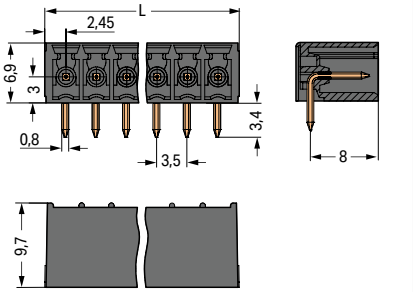

L = (pole no. – 1) x pin spacing + 4.9 mm

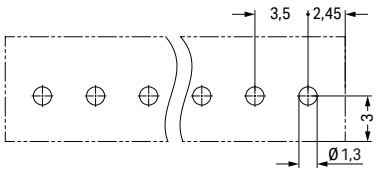

Mating direction to the PCB: 90 °

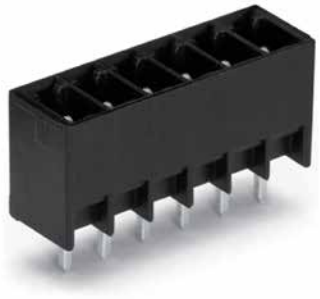

714-136

Pole number	Item No.	PU
2	714-132	200
3	714-133	200
4	714-134	200
5	714-135	200
6	714-136	200
8	714-138	200
10	714-140	100
12	714-142	100
14	714-144	100
15	714-145	100
16	714-146	100

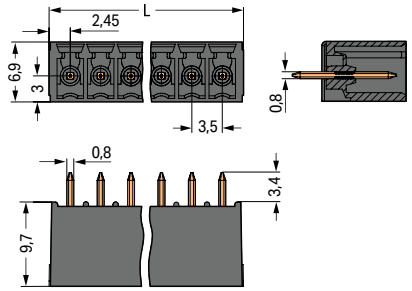

L = (pole no. – 1) x pin spacing + 4.9 mm

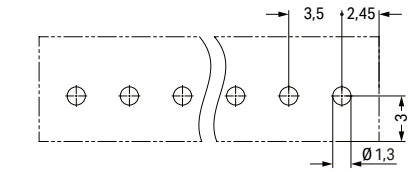

PU = packaging unit; SPU = subpackaging unit; Dimensions in mm

Variants:
- Other pole numbers
- Other versions (or variants) can be requested from WAGO Sales or configured at https://configurator.wago.com/.

Coding ▸ Coding pin carrier with 6 coding pins ▸ Suitable for male connectors ▸ Color: orange



714-101

Color	Item No.	PU (SPU)
orange	**714-101**	100 (25)

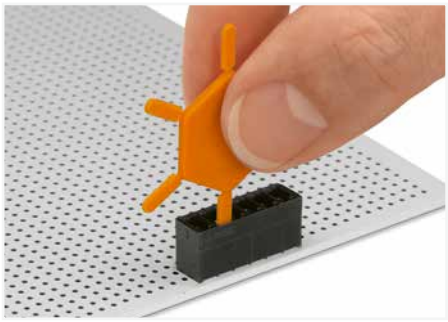

Coding a male header by inserting a coding pin. (*MCS* MINI SL)



Coding a female connector by removing coding finger(s). (*MCS* MINI SL)

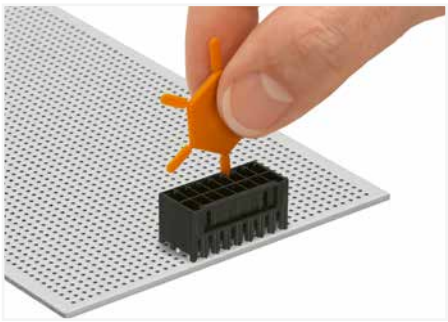

Coding a male header by inserting a coding pin. (*MCS* MINI HD)



Coding a female connector by removing coding finger(s). (*MCS* MINI HD)

PU = packaging unit; SPU = subpackaging unit

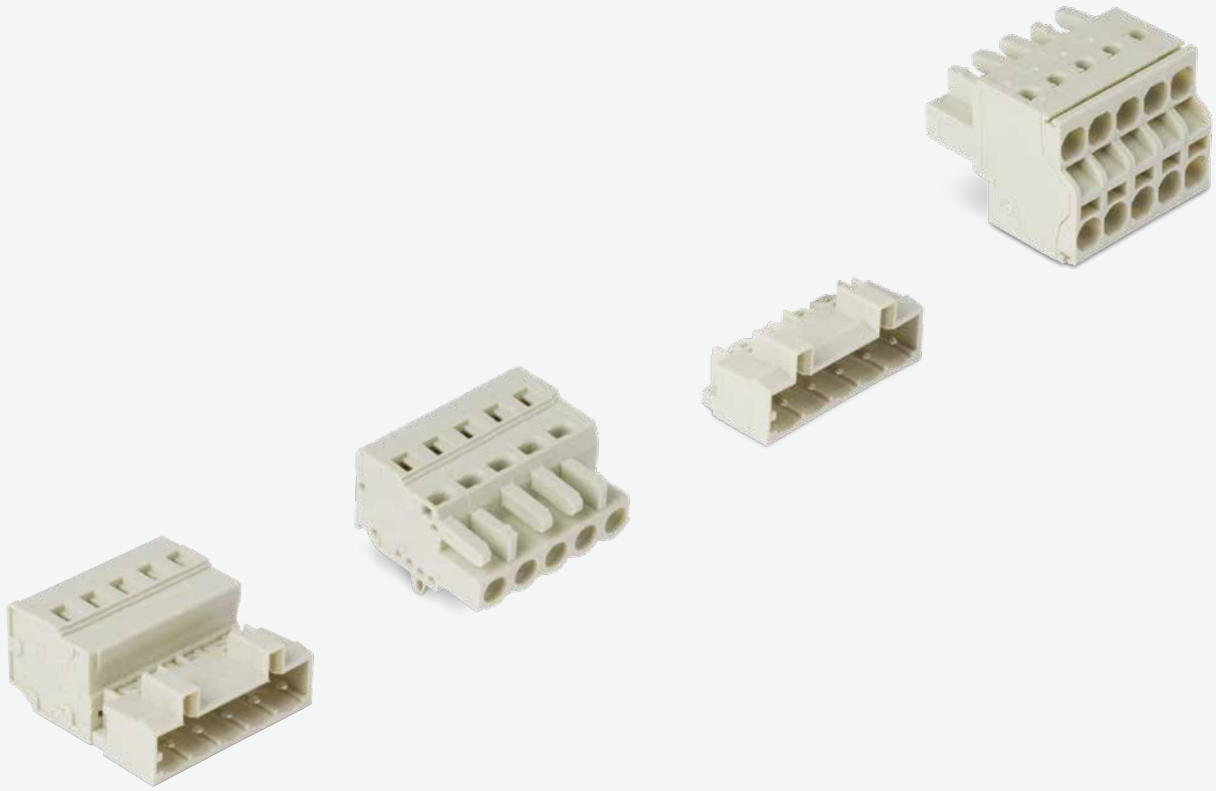

WAGO MULTI CONNECTION SYSTEM
MIDI

WAGO *MULTI CONNECTION SYSTEM* MIDI

Pin Spacing: 5 mm; 7.5 mm ▸ 2.5 mm²

		Pin Spacing	Page
	*MCS* MIDI 1-Conductor Female Connectors ▸ Actuation type: Operating tool ▸ CAGE CLAMP®	5 mm 7.5 mm	552 594
	*MCS* MIDI 2-Conductor Female Connectors ▸ Actuation type: Operating tool ▸ Push-in CAGE CLAMP®	5 mm 7,5 mm	560 600
	*MCS* MIDI 1-Conductor Female Connectors ▸ Actuation type: Push-button ▸ Push-in CAGE CLAMP®	5 mm 7.5 mm	562 602
	*MCS* MIDI 1-Conductor Female Connectors ▸ Actuation type: Lever ▸ Push-in CAGE CLAMP®	5 mm 7.5 mm	566 606
	*MCS* MIDI 1-Conductor Male Connectors ▸ Actuation type: Operating tool ▸ CAGE CLAMP®	5 mm 7.5 mm	568 608
	*MCS* MIDI THT Female Headers	5 mm 7.5 mm	582 616
	*MCS* MIDI THT Male Headers	5 mm 7.5 mm	586 620
	*MCS* MIDI Accessories Accessories and Tools		628 1063
	Application Examples		834

8

PUSH-IN CAGE CLAMP®

MCS **MIDI, 100 % Protected Against Mismating**

Description and Installation

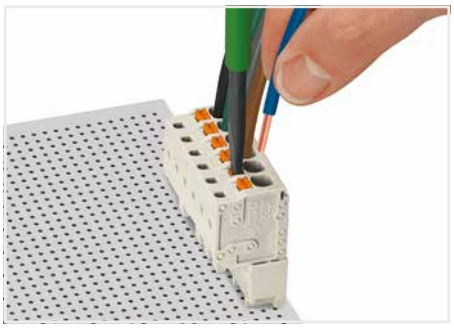

Inserting/removing a conductor via 3.5 mm screwdriver – Push-in CAGE CLAMP® actuation in mated condition.

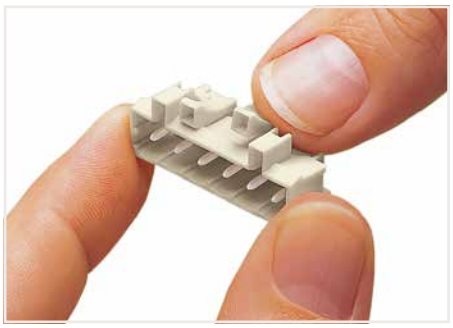

Coding a male header – fitting coding key(s).



Coding a female connector – removing coding finger(s).

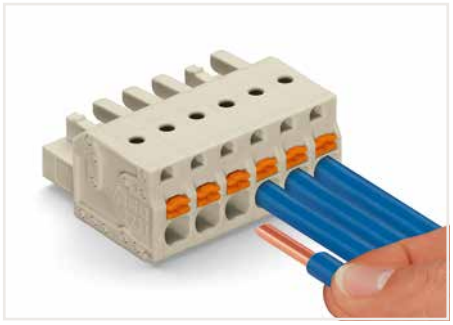

Push-in termination of solid conductors or fine-stranded conductors with ferrule

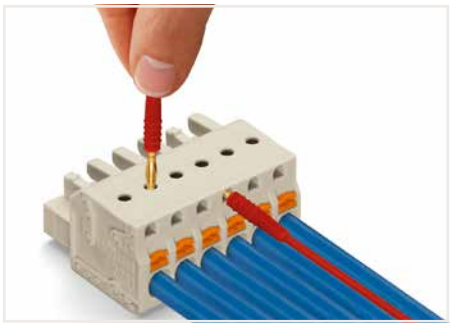

Testing parallel to conductor entry via integrated test ports – female connector with push-buttons and Push-in CAGE CLAMP® connection – touch contact perpendicular to conductor entry.

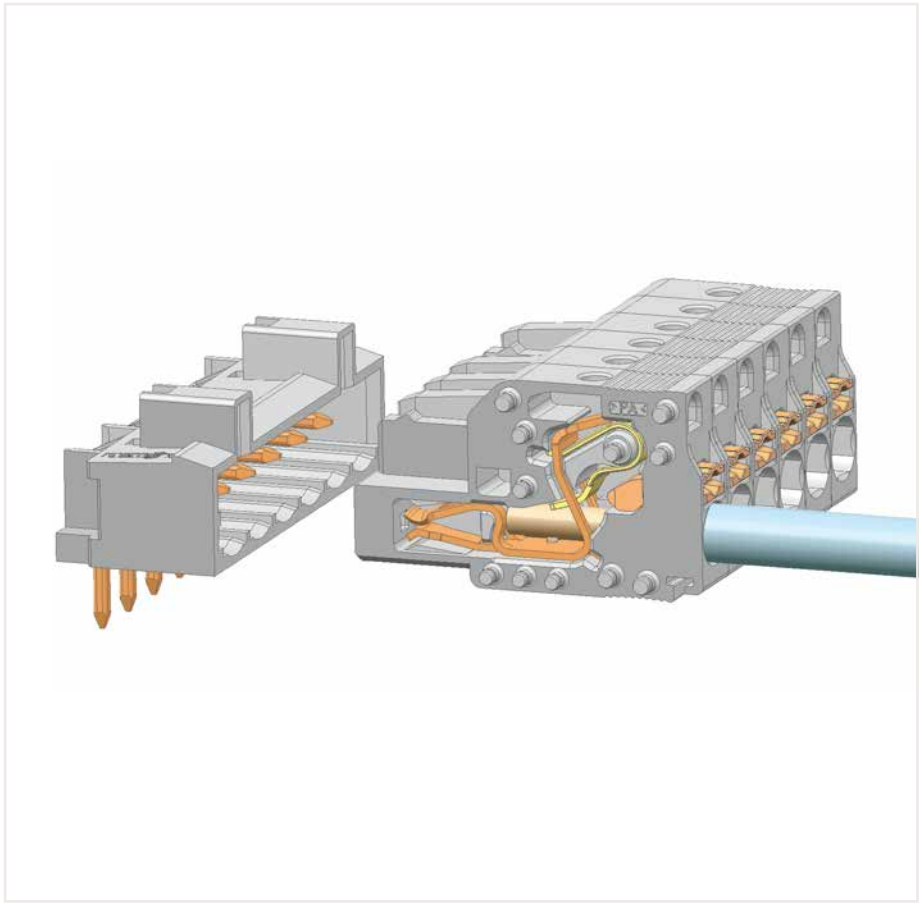

Pin spacing: 5 mm and 7.5 mm, Push-in CAGE CLAMP®



Labeling via direct marking or self-adhesive strips.

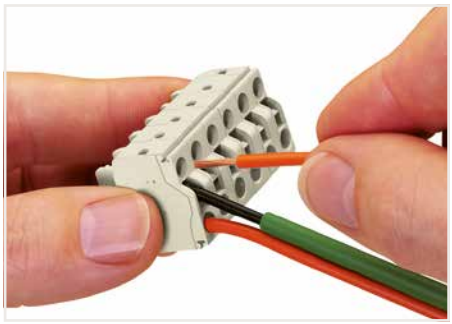

Inserting a fine-stranded conductor via 3.5 mm screwdriver into a 2-conductor female connector equipped with Push-in CAGE CLAMP®.

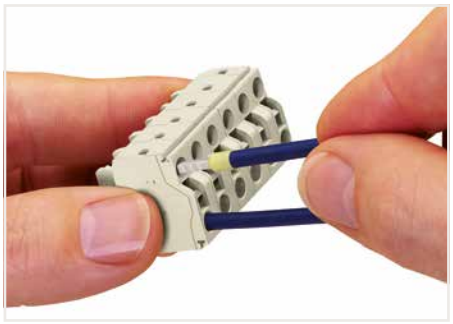

Push-in termination of solid conductors or fine-stranded conductors with ferrule

CAGE CLAMP®

MCS **MIDI, 100 % Protected Against Mismating**

Description and Installation

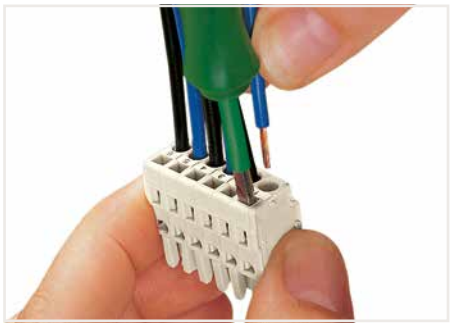

Inserting a conductor via 3.5 mm screwdriver – CAGE CLAMP® actuation parallel to conductor entry.

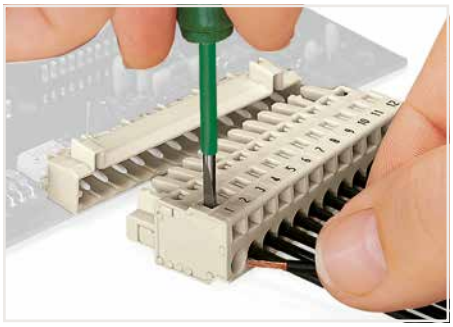

Inserting a conductor via 3.5 mm screwdriver – CAGE CLAMP® actuation perpendicular to conductor entry.



Inserting a conductor into CAGE CLAMP® unit via operating lever (231-291).

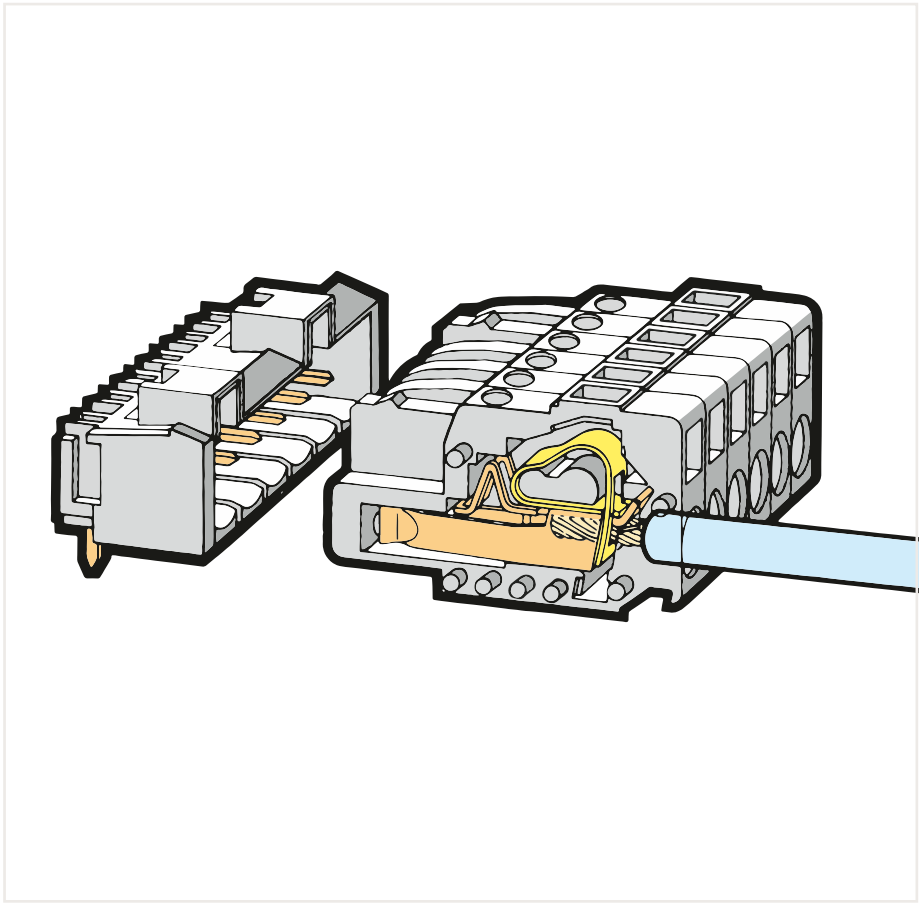

Pin spacing: 5 mm and 7.5 mm, CAGE CLAMP®



Connectors for 280 Series Rail-Mount Terminal Blocks



Angled female connector for panel mounting



Male connector with strain relief plate



Strain relief housing shown with a male connector equipped with CAGE CLAMP®

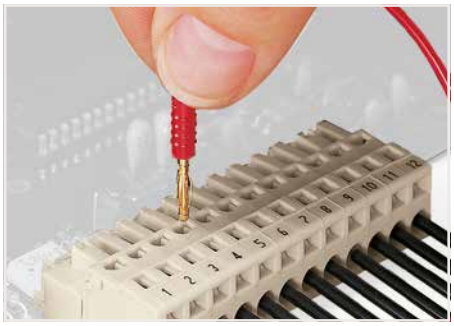

Testing perpendicular to conductor entry with 2 or 2.3 mm Ø test plug – female connector with CAGE CLAMP® – via integrated test ports

8

1-conductor female connector ▸ *MCS* MIDI ▸ 721 Series

Pin spacing: 5 mm / 0.197 inches ▸ Actuation type: Operating tool ▸ CAGE CLAMP® ▸ Conductor entry direction to mating direction: 0 ° ▸ Color: light gray

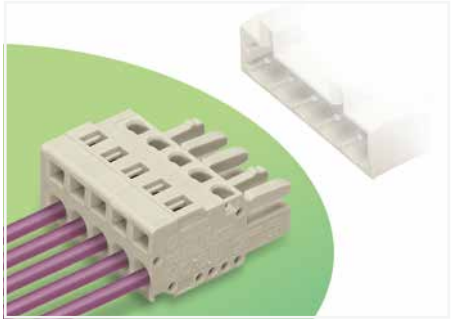

- Universal connection for all conductor types
- Easy cable pre-assembly and on-unit wiring via vertical and horizontal CAGE CLAMP® actuation
- Integrated test ports
- 100% protected against mismating
- Coding option available

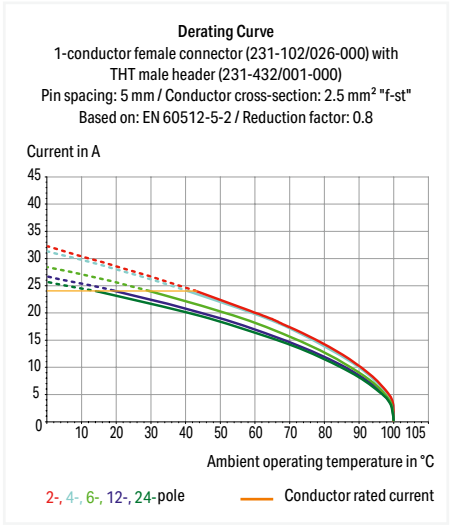

Note:
The *MCS – MULTI CONNECTION SYSTEM* includes connectors without breaking capacity in accordance with DIN EN 61984. When used as intended, these connectors must not be connected/disconnected when live or under load.When used as intended, these connectors must not be connected/disconnected when live or under load. The circuit design should ensure header pins, which can be touched, are not live when unmated.

Cover	Page 639
Ferrule	Page 1081
Installation	Page 641
Insulation stop	Page 640
Jumper	Page 650
Marking	Page 1067
Mounting adapter	Page 642
Strain relief	Page 649
Test and measurement	Page 653, 1088
Tool	Page 636
Direct marking	Page 628
Cutout dimensions	Page 632
See technical section for further information	
Approvals and corresponding ratings, visit www.wago.com	

Electrical data			
Ratings per	**IEC/EN 60664-1**		
Overvoltage category	III	III	II
Pollution degree	3	2	2
Nominal voltage	320 V	320 V	630 V
Rated impulse withstand voltage	4 kV	4 kV	4 kV
Rated current	16 A	16 A	16 A
Approvals per	**UL 1059**		
Use group	B	C	D
Rated voltage	300 V	-	300 V
Rated current	15 A	-	10 A
Ratings			
Approvals per	UL 1977		
Rated voltage	600 V		
Rated current	15 A		
Approvals per	**CSA**		
Use group	B	C	D
Rated voltage	300 V	-	300 V
Rated current	15 A	-	10 A

Connection Data	
Connection technology	CAGE CLAMP®
Strip length	8 … 9 mm / 0.31 … 0.35 inches
Solid conductor	0.08 … 2.5 mm² / 28 … 12 AWG
Fine-stranded conductor	0.08 … 2.5 mm² / 28 … 12 AWG
Fine-stranded conductor; with insulated ferrule	0.25 … 1.5 mm²
Fine-stranded conductor; with uninsulated ferrule	0.25 … 2.5 mm²

Material data	
Material group	I
Insulation material (main housing)	Polyamide (PA66)
Flammability class per UL94	V0
Clamping spring material	Chrome-nickel spring steel (CrNi)
Contact material	Copper alloy
Contact Plating	Tin

Environmental requirements	
Limit temperature range	-60 … +100 °C
Processing temperature	-35 … +60 °C

1-conductor female connector ▸ *MCS* MIDI ▸ 721 Series

Pin spacing: 5 mm / 0.197 inches ▸ Actuation type: Operating tool ▸ CAGE CLAMP® ▸ Conductor entry direction to mating direction: 0 ° ▸ Color: light gray

	Locking of plug-in connection: Locking lever	Mounting type: Snap-in flange
		

721-105/026-000

Pole number	Item No.	PU
2	721-102/026-000	100
3	721-103/026-000	100
4	721-104/026-000	100
5	721-105/026-000	100
6	721-106/026-000	50
7	721-107/026-000	50
8	721-108/026-000	50
9	721-109/026-000	50
10	721-110/026-000	50
11	721-111/026-000	25
12	721-112/026-000	25
13	721-113/026-000	25
14	721-114/026-000	25
15	721-115/026-000	25
16	721-116/026-000	25
20	721-120/026-000	10

721-105/037-000

Pole number	Item No.	PU
2	721-102/037-000	100
3	721-103/037-000	50
4	721-104/037-000	50
5	721-105/037-000	50
6	721-106/037-000	50
7	721-107/037-000	50
8	721-108/037-000	25
9	721-109/037-000	25
10	721-110/037-000	25
11	721-111/037-000	25
12	721-112/037-000	25
13	721-113/037-000	25
14	721-114/037-000	25
15	721-115/037-000	25
16	721-116/037-000	10
20	721-120/037-000	10

721-113/125-000

Pole number	Item No.	PU
13	721-113/125-000	25
14	721-114/125-000	25
15	721-115/125-000	25
16	721-116/125-000	10

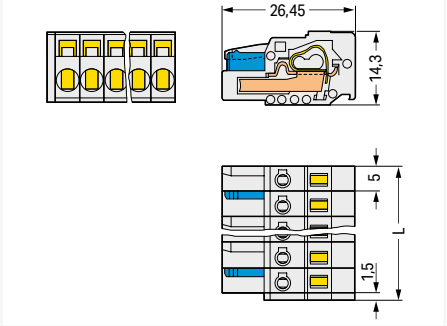

L = (pole no. x pin spacing) + 1.5 mm
2-pole female connectors – one latch only

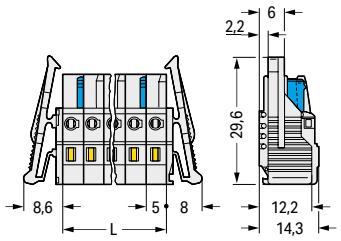

L = pole no. x pin spacing
2-pole female connectors – one latch only

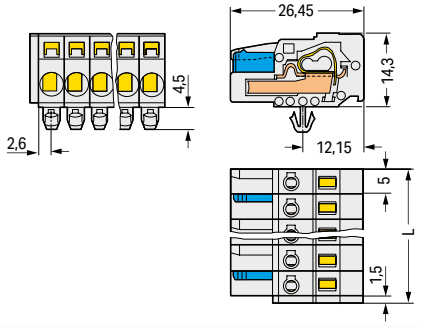

L = (pole no. x pin spacing) + 1.5 mm
2-pole female connectors – one latch only

PU = packaging unit; SPU = subpackaging unit; Dimensions in mm

Variants:
- Other pole numbers
- Gold-plated or partially gold-plated contact surfaces
- Other versions (or variants) can be requested from WAGO Sales or configured at https://configurator.wago.com/.

1-conductor female connector ▸ *MCS* MIDI ▸ 721 Series

Pin spacing: 5 mm / 0.197 inches ▸ Actuation type: Operating tool ▸ CAGE CLAMP® ▸ Conductor entry direction to mating direction: 0 ° ▸ Color: light gray

Mounting type: Panel mounting ▸ Mounting type: Snap-in foot



721-105/008-000

Pole number	Item No.	PU
2	721-102/008-000	100
3	721-103/008-000	100
4	721-104/008-000	100
5	721-105/008-000	100
6	721-106/008-000	50
7	721-107/008-000	50
8	721-108/008-000	50
9	721-109/008-000	50
10	721-110/008-000	50
11	721-111/008-000	25
12	721-112/008-000	25
13	721-113/008-000	25
14	721-114/008-000	25
15	721-115/008-000	25
16	721-116/008-000	25
20	721-120/008-000	10

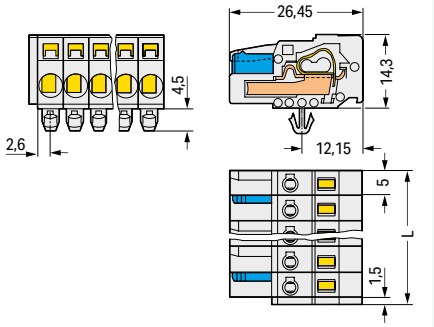

L = (pole no. x pin spacing) + 1.5 mm
2-pole female connectors – one latch only

Mounting type: Feed-through mounting; Panel mounting ▸ Mounting type: Mounting flange



721-105/031-000

Pole number	Item No.	PU
2	721-102/031-000	100
3	721-103/031-000	50
4	721-104/031-000	50
5	721-105/031-000	50
6	721-106/031-000	50
7	721-107/031-000	50
8	721-108/031-000	50
9	721-109/031-000	25
10	721-110/031-000	25
11	721-111/031-000	25
12	721-112/031-000	25
13	721-113/031-000	25
14	721-114/031-000	25
15	721-115/031-000	25
16	721-116/031-000	10
20	721-120/031-000	10

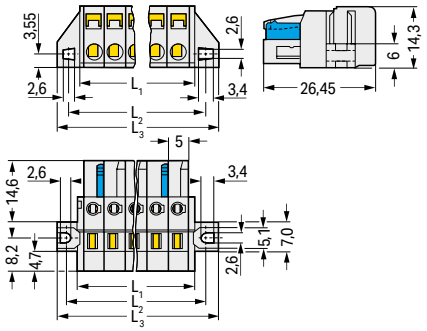

L_1 = (pole no. x pin spacing) + 3 mm
L_2 = (pole no. x pin spacing) + 8.8 mm
L_3 = (pole no. x pin spacing) + 14.8 mm
2-pole female connectors – one latch only

Mounting type: Feed-through mounting; Panel mounting ▸ Mounting type: Mounting flange ▸ with reinforcing strips



721-108/027-000

Pole number	Item No.	PU
6	721-106/027-000	50
7	721-107/027-000	50
8	721-108/027-000	50
9	721-109/027-000	25
10	721-110/027-000	25
11	721-111/027-000	25
12	721-112/027-000	25
13	721-113/027-000	25
14	721-114/027-000	25
15	721-115/027-000	25
16	721-116/027-000	10
20	721-120/027-000	10

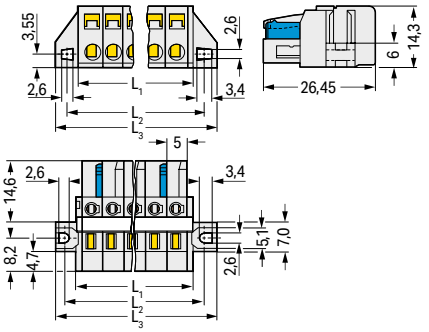

L_1 = (pole no. x pin spacing) + 3 mm
L_2 = (pole no. x pin spacing) + 8.8 mm
L_3 = (pole no. x pin spacing) + 14.8 mm
2-pole female connectors – one latch only

PU = packaging unit; SPU = subpackaging unit; Dimensions in mm

Variants:
- Other pole numbers
- Gold-plated or partially gold-plated contact surfaces
- Other versions (or variants) can be requested from WAGO Sales or configured at https://configurator.wago.com/.

1-conductor female connector, angled ▸ *MCS* MIDI ▸ 722 Series

Pin spacing: 5 mm / 0.197 inches ▸ Actuation type: Operating tool ▸ CAGE CLAMP® ▸ Color: light gray

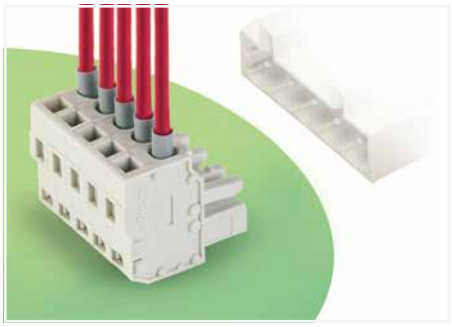

- Universal connection for all conductor types
- Easy cable pre-assembly and on-unit wiring via vertical and horizontal CAGE CLAMP® actuation
- Integrated test ports
- 100% protected against mismating
- Coding option available

Derating Curve
1-conductor female connector (231-102/026-000) with THT male header (231-432/001-000)
Pin spacing: 5 mm / Conductor cross-section: 2.5 mm² "f-st"
Based on: EN 60512-5-2 / Reduction factor: 0.8

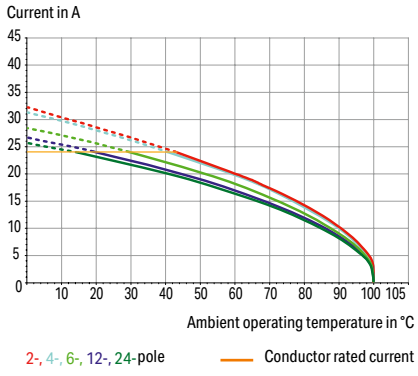

Electrical data			
Ratings per	**IEC/EN 60664-1**		
Overvoltage category	III	III	II
Pollution degree	3	2	2
Nominal voltage	320 V	320 V	630 V
Rated impulse withstand voltage	4 kV	4 kV	4 kV
Rated current	14 A	14 A	14 A
Approvals per	**UL 1059**		
Use group	B	C	D
Rated voltage	300 V	-	300 V
Rated current	15 A	-	10 A
Approvals per	**CSA**		
Use group	B	C	D
Rated voltage	300 V	-	300 V
Rated current	15 A	-	10 A

Connection Data	
Connection technology	CAGE CLAMP®
Strip length	8 … 9 mm / 0.31 … 0.35 inches
Solid conductor	0.08 … 2.5 mm² / 28 … 12 AWG
Fine-stranded conductor	0.08 … 2.5 mm² / 28 … 12 AWG
Fine-stranded conductor; with insulated ferrule	0.25 … 1.5 mm²
Fine-stranded conductor; with uninsulated ferrule	0.25 … 2.5 mm²

Material data	
Material group	I
Insulation material (main housing)	Polyamide (PA66)
Flammability class per UL94	V0
Clamping spring material	Chrome-nickel spring steel (CrNi)
Contact material	Copper alloy
Contact Plating	Tin

Mechanical data	
Design	angled

Environmental requirements	
Limit temperature range	-60 … +85 °C
Processing temperature	-35 … +60 °C

Note:
The *MCS – MULTI CONNECTION SYSTEM* includes connectors without breaking capacity in accordance with DIN EN 61984. When used as intended, these connectors must not be connected/disconnected when live or under load.When used as intended, these connectors must not be connected/disconnected when live or under load. The circuit design should ensure header pins, which can be touched, are not live when unmated.

Cover	Page 639
Ferrule	Page 1081
Insulation stop	Page 640
Jumper	Page 650
Marking	Page 1067
Strain relief	Page 649
Test and measurement	Page 653, 1088
Tool	Page 636
Direct marking	Page 628
See technical section for further information	
Approvals and corresponding ratings, visit www.wago.com	

1-conductor female connector, angled ▸ *MCS* MIDI ▸ 722 Series

Pin spacing: 5 mm / 0.197 inches ▸ Actuation type: Operating tool ▸ CAGE CLAMP® ▸ Color: light gray

Conductor entry direction to mating direction: 90 °



722-205/026-000

Pole number	Item No.	PU
2	722-202/026-000	100
3	722-203/026-000	100
4	722-204/026-000	100
5	722-205/026-000	100
6	722-206/026-000	50
7	722-207/026-000	25
8	722-208/026-000	25
9	722-209/026-000	25
10	722-210/026-000	25
11	722-211/026-000	25
12	722-212/026-000	25
13	722-213/026-000	25
14	722-214/026-000	25
15	722-215/026-000	25
16	722-216/026-000	10
20	722-220/026-000	10

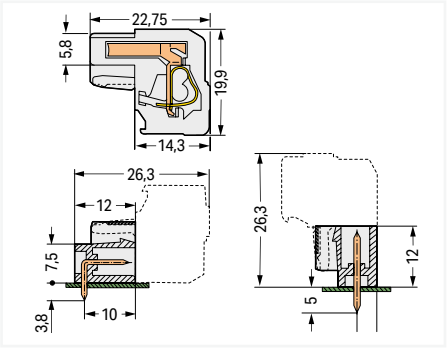

Total length = (pole no. x pin spacing) + 1.5 mm + 0.9 mm
2-pole female connectors – one latch only

Conductor entry direction to mating direction: 270 °



722-105/026-000

Pole number	Item No.	PU
2	722-102/026-000	100
3	722-103/026-000	100
4	722-104/026-000	100
5	722-105/026-000	100
6	722-106/026-000	50
7	722-107/026-000	50
8	722-108/026-000	50
9	722-109/026-000	50
10	722-110/026-000	50
11	722-111/026-000	25
12	722-112/026-000	25
14	722-114/026-000	25
16	722-116/026-000	25
20	722-120/026-000	10

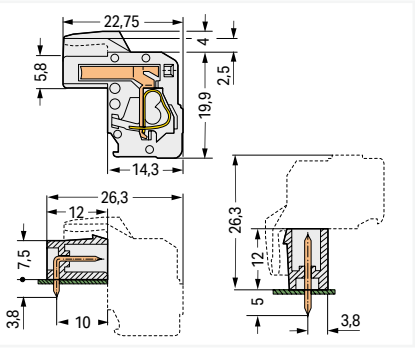

Total length = (pole no. x pin spacing) + 1.5 mm + 0.9 mm
2-pole female connectors – one latch only

PU = packaging unit; SPU = subpackaging unit; Dimensions in mm

Variants:
- Other pole numbers
- Gold-plated or partially gold-plated contact surfaces
- Other versions (or variants) can be requested from WAGO Sales or configured at https://configurator.wago.com/.

1-conductor female connector, angled ▸ *MCS* MIDI ▸ 721 Series

Pin spacing: 5 mm / 0.197 inches ▸ Actuation type: Operating tool ▸ CAGE CLAMP® ▸ Conductor entry direction to mating direction: 90 ° ▸ Color: light gray

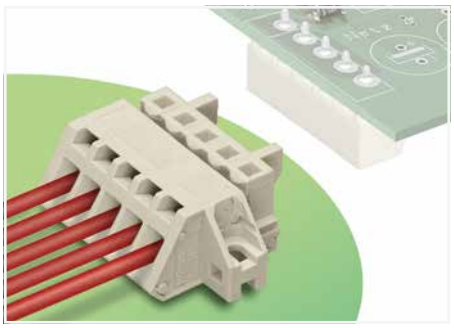

- Universal connection for all conductor types
- Available with snap-in mounting feet or flanges for panel or through-panel mounting
- Mounting adapter allows versions with snap-in mounting feet to be DIN-35 rail mounted
- Easy conductor termination, even when halves are mated
- 100% protected against mismating

Derating Curve
1-conductor female connector (721-302/031-000) with THT male header (721-162/001-000)
Pin spacing: 5 mm / Conductor cross-section: 2.5 mm² "f-st"
Based on: EN 60512-5-2 / Reduction factor: 0.8

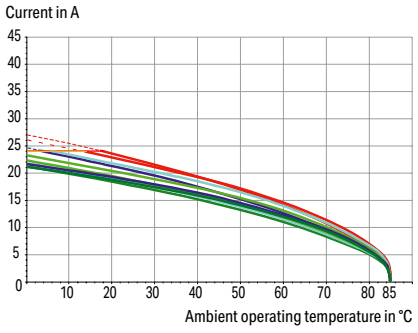

Electrical data			
Ratings per	**IEC/EN 60664-1**		
Overvoltage category	III	III	II
Pollution degree	3	2	2
Nominal voltage	320 V	320 V	630 V
Rated impulse withstand voltage	4 kV	4 kV	4 kV
Rated current	12 A	12 A	12 A
Approvals per	**UL 1059**		
Use group	B	C	D
Rated voltage	300 V	-	300 V
Rated current	15 A	-	10 A
Approvals per	**CSA**		
Use group	B	C	D
Rated voltage	300 V	-	300 V
Rated current	15 A	-	10 A

Connection Data	
Connection technology	CAGE CLAMP®
Strip length	7 … 8 mm / 0.28 … 0.31 inches
Solid conductor	0.08 … 2.5 mm² / 28 … 12 AWG
Fine-stranded conductor	0.08 … 2.5 mm² / 28 … 12 AWG
Fine-stranded conductor; with insulated ferrule	0.25 … 1.5 mm²
Fine-stranded conductor; with uninsulated ferrule	0.25 … 2.5 mm²

Material data	
Material group	I
Insulation material (main housing)	Polyamide (PA66)
Flammability class per UL94	V0
Clamping spring material	Chrome-nickel spring steel (CrNi)
Contact material	Copper alloy
Contact Plating	Tin

Mechanical data	
Design	angled; mountable

Environmental requirements	
Limit temperature range	-60 … +85 °C
Processing temperature	-35 … +60 °C

Note:
The *MCS – MULTI CONNECTION SYSTEM* includes connectors without breaking capacity in accordance with DIN EN 61984. When used as intended, these connectors must not be connected/disconnected when live or under load.When used as intended, these connectors must not be connected/disconnected when live or under load. The circuit design should ensure header pins, which can be touched, are not live when unmated.

Cover	Page 639
Ferrule	Page 1081
Installation	Page 642
Jumper	Page 650
Marking	Page 1067
Strain relief	Page 649
Test and measurement	Page 653
Tool	Page 636
Cutout dimensions	Page 632
Direct marking	Page 628

See technical section for further information

Approvals and corresponding ratings, visit www.wago.com

1-conductor female connector, angled ▸ *MCS* MIDI ▸ 721 Series

Pin spacing: 5 mm / 0.197 inches ▸ Actuation type: Operating tool ▸ CAGE CLAMP® ▸ Conductor entry direction to mating direction: 90 ° ▸ Color: light gray

Mounting type: Panel mounting ▸ Mounting type: Mounting flange



721-305/031-000

Pole number	Item No.	PU
2	721-302/031-000	100
3	721-303/031-000	50
4	721-304/031-000	50
5	721-305/031-000	50
6	721-306/031-000	50
7	721-307/031-000	50
8	721-308/031-000	50
9	721-309/031-000	25
10	721-310/031-000	25
11	721-311/031-000	25
12	721-312/031-000	25
13	721-313/031-000	25
14	721-314/031-000	25
15	721-315/031-000	10
16	721-316/031-000	10
20	721-320/031-000	10

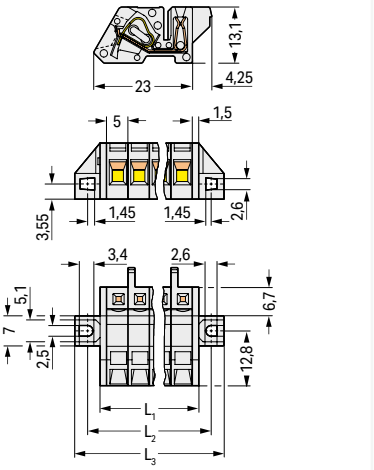

L_1 = (pole no. x pin spacing) + 3 mm
L_2 = (pole no. x pin spacing) + 8.8 mm
L_3 = (pole no. x pin spacing) + 14.8 mm

Mounting type: Feed-through mounting; Panel mounting ▸ Mounting type: Snap-in foot



721-305/008-000

Pole number	Item No.	PU
2	721-302/008-000	100
3	721-303/008-000	50
4	721-304/008-000	50
5	721-305/008-000	50
6	721-306/008-000	50
7	721-307/008-000	50
8	721-308/008-000	50
9	721-309/008-000	50
10	721-310/008-000	50
11	721-311/008-000	25
12	721-312/008-000	25
13	721-313/008-000	25
14	721-314/008-000	25
15	721-315/008-000	25
16	721-316/008-000	25
20	721-320/008-000	10

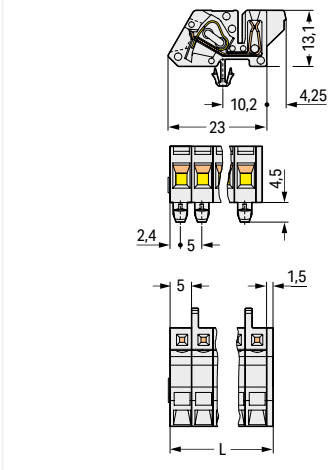

L = (pole no. x pin spacing) + 1.5 mm

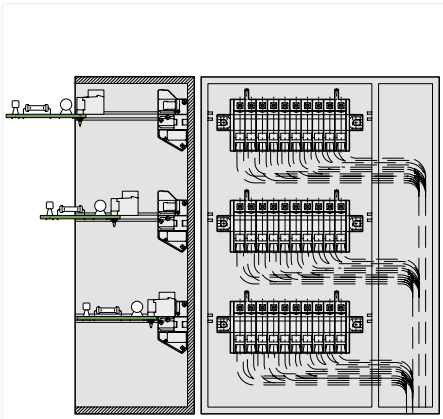

Multilevel arrangement in a distributed electronic housing



Angled female connector –
a male header with straight solder pins is used for horizontal PCB mounting in narrow housings.

8

PU = packaging unit; SPU = subpackaging unit; Dimensions in mm

Variants:
- Other pole numbers
- Gold-plated or partially gold-plated contact surfaces
- Other versions (or variants) can be requested from WAGO Sales or configured at https://configurator.wago.com/.

2-conductor female connector ▸ *MCS* MIDI ▸ 721 Series

Pin spacing: 5 mm / 0.197 inches ▸ Actuation type: Operating tool ▸ Push-in CAGE CLAMP® ▸ Conductor entry direction to mating direction: 0 ° ▸ Color: light gray

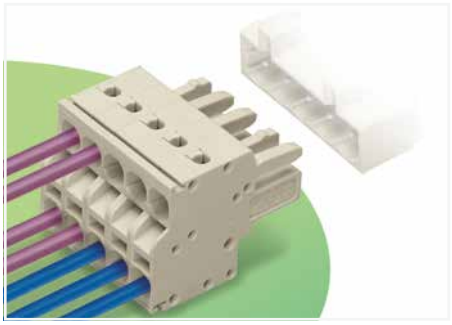

- Universal connection for all conductor types
- Two conductor entries per pole
- For looping through power or data buses
- Bus connection is retained, even when unmated
- Push-in terminations of solid and ferruled conductors
- 100% protected against mismating
- With coding fingers

Derating Curve
2-conductor female connector (721-2102/026-000) with THT male header (721-132/001-000)
Pin spacing: 5 mm / Conductor cross-section: 2.5 mm² "f-st"
Based on: EN 60512-5-2 / Reduction factor: 0.8

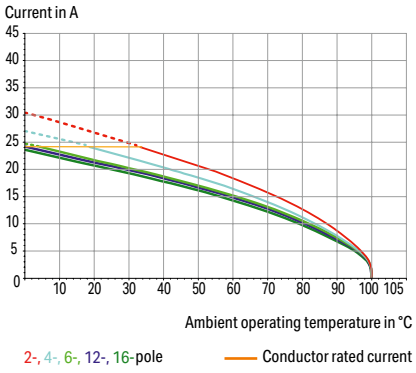

Electrical data			
Ratings per	**IEC/EN 60664-1**		
Overvoltage category	III	III	II
Pollution degree	3	2	2
Nominal voltage	320 V	320 V	630 V
Rated impulse withstand voltage	4 kV	4 kV	4 kV
Rated current	16 A	16 A	16 A
Approvals per	**UL 1059**		
Use group	B	C	D
Rated voltage	300 V	-	300 V
Rated current	20 A	-	10 A
Approvals per	**CSA**		
Use group	B	C	D
Rated voltage	300 V	-	300 V
Rated current	15 A	-	10 A

Connection Data	
Connection technology	Push-in CAGE CLAMP®
Strip length	9 … 10 mm / 0.35 … 0.39 inches
Solid conductor	0.2 … 2.5 mm² / 24 … 12 AWG
Fine-stranded conductor	0.2 … 2.5 mm² / 24 … 12 AWG
Fine-stranded conductor; with insulated ferrule	0.25 … 1.5 mm²
Fine-stranded conductor; with uninsulated ferrule	0.25 … 2.5 mm²

Material data	
Material group	I
Insulation material (main housing)	Polyamide (PA66)
Flammability class per UL94	V0
Clamping spring material	Chrome-nickel spring steel (CrNi)
Contact material	Copper alloy
Contact Plating	Tin

Environmental requirements	
Limit temperature range	-60 … +100 °C
Processing temperature	-35 … +60 °C

Note:
The *MCS – MULTI CONNECTION SYSTEM* includes connectors without breaking capacity in accordance with DIN EN 61984. When used as intended, these connectors must not be connected/disconnected when live or under load.When used as intended, these connectors must not be connected/disconnected when live or under load. The circuit design should ensure header pins, which can be touched, are not live when unmated.

Ferrule	Page 1081
Insulation stop	Page 640
Marking	Page 1067
Strain relief	Page 647
Test and measurement	Page 653, 1088
Tool	Page 637
Direct marking	Page 628
See technical section for further information	
Approvals and corresponding ratings, visit www.wago.com	

2-conductor female connector ▸ *MCS* MIDI ▸ 721 Series

Pin spacing: 5 mm / 0.197 inches ▸ Actuation type: Operating tool ▸ Push-in CAGE CLAMP® ▸ Conductor entry direction to mating direction: 0 ° ▸ Color: light gray

Plugging without loss of pin spacing

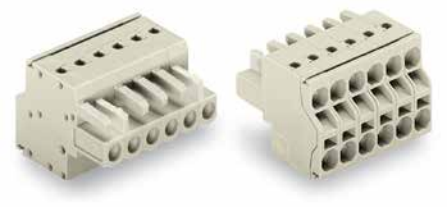

721-2106/026-000

Pole number	Item No.	PU
2	721-2102/026-000	100
3	721-2103/026-000	100
4	721-2104/026-000	100
5	721-2105/026-000	50
6	721-2106/026-000	50
7	721-2107/026-000	50
8	721-2108/026-000	50
9	721-2109/026-000	50
10	721-2110/026-000	50
11	721-2111/026-000	25
12	721-2112/026-000	25
13	721-2113/026-000	25
14	721-2114/026-000	25
15	721-2115/026-000	25
16	721-2116/026-000	25

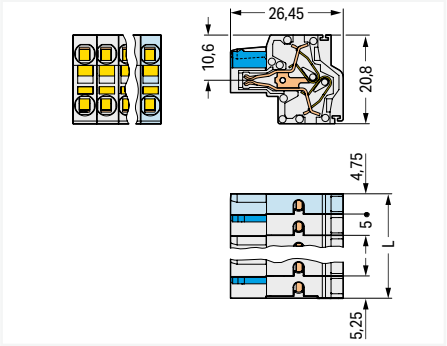

L = (pole no. – 2) x pin spacing + 10 mm
2-pole female connectors – one latch only

Locking of plug-in connection: Locking lever

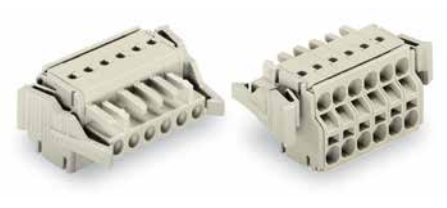

721-2106/037-000

Pole number	Item No.	PU (SPU)
2	721-2102/037-000	100
3	721-2103/037-000	50
4	721-2104/037-000	50
5	721-2105/037-000	50
6	721-2106/037-000	50
7	721-2107/037-000	50 (44)
8	721-2108/037-000	25
9	721-2109/037-000	25
10	721-2110/037-000	25
11	721-2111/037-000	25
12	721-2112/037-000	25
13	721-2113/037-000	25
14	721-2114/037-000	25
15	721-2115/037-000	10
16	721-2116/037-000	10

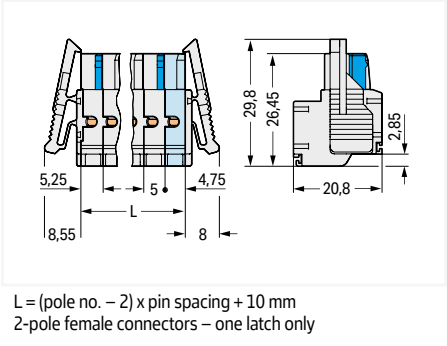

L = (pole no. – 2) x pin spacing + 10 mm
2-pole female connectors – one latch only

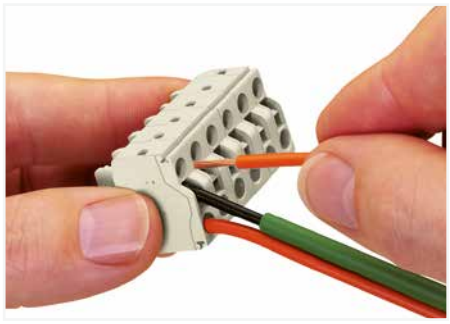

Operating Push-in CAGE CLAMP® is easy, fast and identical to that of CAGE CLAMP®. The screwdriver is fully inserted into the operating slot, holding Push-in CAGE CLAMP® open. After the conductor has been inserted into the clamping unit and the screwdriver been withdrawn, the conductor is clamped safely. Solid and fine-stranded conductors < 0.5 mm² (20 AWG) are terminated and removed using a screwdriver.

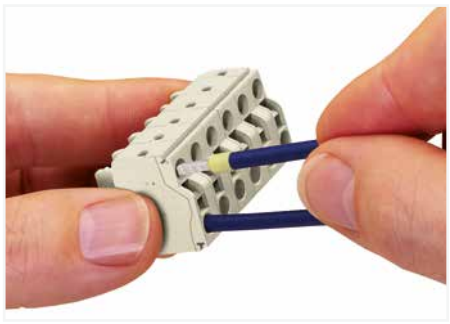

Solid conductors ≥ 0.5 mm² (20 AWG), as well as ferruled, fine-stranded conductors can be terminated by simply pushing them into unit. Integrated test ports allow touch contact with current bar via test probes in both horizontal and vertical directions.

8

PU = packaging unit; SPU = subpackaging unit; Dimensions in mm

Variants:
- Other pole numbers
- Gold-plated or partially gold-plated contact surfaces
- Other versions (or variants) can be requested from WAGO Sales or configured at https://configurator.wago.com/.

1-conductor female connector ▸ *MCS* MIDI ▸ 2721 Series

Pin spacing: 5 mm / 0.197 inches ▸ Actuation type: Push-button ▸ Push-in CAGE CLAMP® ▸ Conductor entry direction to mating direction: 0 ° ▸ Color: light gray

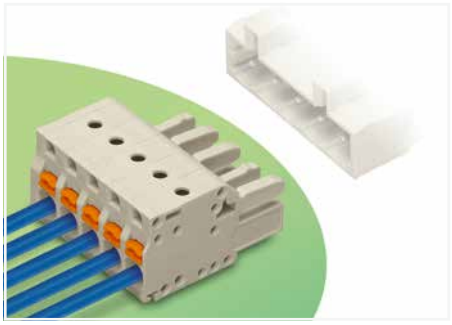

- Universal connection for all conductor types
- Easy-to-use design does not require specialty tools
- Ability to wire while mated
- Simple, push-in termination of solid and ferruled conductors
- Integrated test ports for testing parallel to the conductor entry
- 100% protected against mismating
- Coding option available

Derating Curve
1-conductor female connector (2721-102/026-000) with THT male header (721-162/001-000)
Pin spacing: 5 mm / Conductor cross-section: 2.5 mm² "f-st"
Based on: EN 60512-5-2 / Reduction factor: 0.8

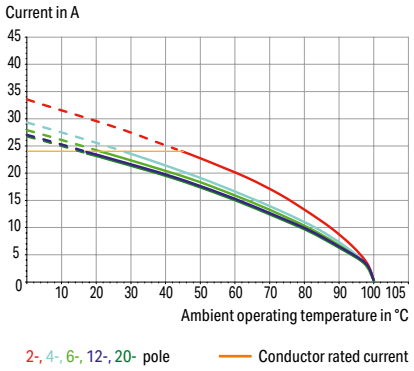

Electrical data			
Ratings per	**IEC/EN 60664-1**		
Overvoltage category	III	III	II
Pollution degree	3	2	2
Nominal voltage	320 V	320 V	630 V
Rated impulse withstand voltage	4 kV	4 kV	4 kV
Rated current	16 A	16 A	16 A
Approvals per	**UL 1059**		
Use group	B	C	D
Rated voltage	300 V	150 V	300 V
Rated current	15 A	15 A	10 A
Approvals per	**CSA**		
Use group	B	C	D
Rated voltage		300 V	
Rated current	15 A	15 A	10 A

Connection Data	
Connection technology	Push-in CAGE CLAMP®
Strip length	10 … 11 mm / 0.39 … 0.43 inches
Solid conductor	0.2 … 2.5 mm² / 24 … 12 AWG
Fine-stranded conductor	0.2 … 2.5 mm² / 24 … 12 AWG
Fine-stranded conductor; with insulated ferrule	0.25 … 1.5 mm²
Fine-stranded conductor; with uninsulated ferrule	0.25 … 2.5 mm²

Material data	
Material group	I
Insulation material (main housing)	Polyamide (PA66)
Flammability class per UL94	V0
Clamping spring material	Chrome-nickel spring steel (CrNi)
Contact material	Copper alloy
Contact Plating	Tin

Environmental requirements	
Limit temperature range	-60 … +100 °C
Processing temperature	-35 … +60 °C

Note:
The *MCS – MULTI CONNECTION SYSTEM* includes connectors without breaking capacity in accordance with DIN EN 61984. When used as intended, these connectors must not be connected/disconnected when live or under load.When used as intended, these connectors must not be connected/disconnected when live or under load. The circuit design should ensure header pins, which can be touched, are not live when unmated.

Ferrule	Page 1081
Installation	Page 641
Insulation stop	Page 640
Marking	Page 1067
Mounting adapter	Page 642
Strain relief	Page 647
Test and measurement	Page 653, 1088
Tool	Page 636, 1072
Direct marking	Page 628
Cutout dimensions	Page 632
See technical section for further information	
Approvals and corresponding ratings, visit www.wago.com	

1-conductor female connector ▸ *MCS* MIDI ▸ 2721 Series

Pin spacing: 5 mm / 0.197 inches ▸ Actuation type: Push-button ▸ Push-in CAGE CLAMP® ▸ Conductor entry direction to mating direction: 0 ° ▸ Color: light gray

	Locking of plug-in connection: Locking lever	Mounting type: Panel mounting ▸ Mounting type: Snap-in foot







2721-106/026-000

Pole number	Item No.	PU
2	2721-102/026-000	100
3	2721-103/026-000	100
4	2721-104/026-000	100
5	2721-105/026-000	100
6	2721-106/026-000	50
7	2721-107/026-000	50
8	2721-108/026-000	50
9	2721-109/026-000	50
10	2721-110/026-000	50
11	2721-111/026-000	25
12	2721-112/026-000	25
13	2721-113/026-000	25
14	2721-114/026-000	25
15	2721-115/026-000	25
16	2721-116/026-000	25
20	2721-120/026-000	10

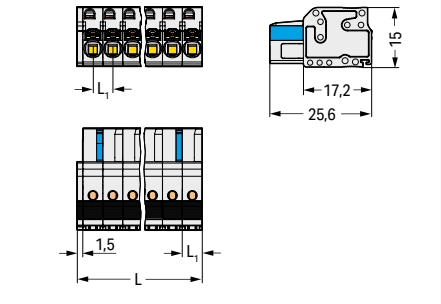

L = (pole no. x pin spacing) + 1.5 mm
L_1 = 5 mm
2-pole female connectors – one latch only

2721-106/037-000

Pole number	Item No.	PU
2	2721-102/037-000	100
3	2721-103/037-000	50
4	2721-104/037-000	50
5	2721-105/037-000	50
6	2721-106/037-000	50
7	2721-107/037-000	50
8	2721-108/037-000	25
9	2721-109/037-000	25
10	2721-110/037-000	25
11	2721-111/037-000	25
12	2721-112/037-000	25
14	2721-114/037-000	25
15	2721-115/037-000	25
16	2721-116/037-000	10
20	2721-120/037-000	10

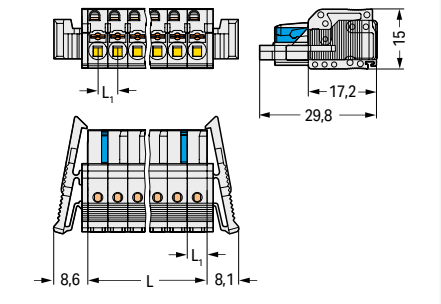

L = (pole no. x pin spacing) + 1.5 mm
L_1 = 5 mm
2-pole female connectors – one latch only

2721-106/008-000

Pole number	Item No.	PU
2	2721-102/008-000	100
3	2721-103/008-000	100
4	2721-104/008-000	100
5	2721-105/008-000	100
6	2721-106/008-000	50
7	2721-107/008-000	50
8	2721-108/008-000	50
9	2721-109/008-000	50
10	2721-110/008-000	50
11	2721-111/008-000	25
12	2721-112/008-000	25
14	2721-114/008-000	25
15	2721-115/008-000	25
16	2721-116/008-000	25
20	2721-120/008-000	25

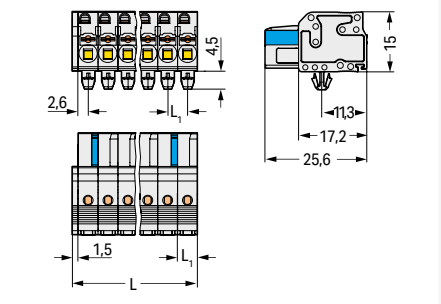

L = (pole no. x pin spacing) + 1.5 mm
L_1 = 5 mm
2-pole female connectors – one latch only

8

PU = packaging unit; SPU = subpackaging unit; Dimensions in mm

Variants:
- Other pole numbers
- Gold-plated or partially gold-plated contact surfaces
- Other versions (or variants) can be requested from WAGO Sales or configured at https://configurator.wago.com/.

1-conductor female connector ▸ *MCS* MIDI ▸ 2721 Series

Pin spacing: 5 mm / 0.197 inches ▸ Actuation type: Push-button ▸ Push-in CAGE CLAMP® ▸ Conductor entry direction to mating direction: 0 ° ▸ Color: light gray

Mounting type: Feed-through mounting; Panel mounting ▸ Mounting type: Mounting flange



2721-106/031-000

Pole number	Item No.	PU
2	**2721-102/031-000**	100
3	**2721-103/031-000**	50
4	**2721-104/031-000**	50
5	**2721-105/031-000**	50
6	**2721-106/031-000**	50
7	**2721-107/031-000**	50
8	**2721-108/031-000**	50
9	**2721-109/031-000**	50
10	**2721-110/031-000**	25
12	**2721-112/031-000**	25
14	**2721-114/031-000**	10
16	**2721-116/031-000**	10
20	**2721-120/031-000**	10

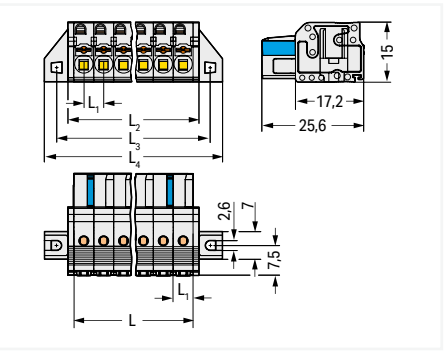

L = pole no. x pin spacing
L_1 = 5 mm
L_2 = L + 2.8 mm
L_3 = L + 8.8 mm
L_4 = L + 14.8 mm
2-pole female connectors – one latch only

PU = packaging unit; SPU = subpackaging unit; Dimensions in mm

Variants:
- Other pole numbers
- Gold-plated or partially gold-plated contact surfaces
- Other versions (or variants) can be requested from WAGO Sales or configured at https://configurator.wago.com/.

1-conductor female connector ▸ *MCS* MIDI ▸ 2721 Series

Pin spacing: 5 mm / 0.197 inches ▸ Actuation type: Lever ▸ Push-in CAGE CLAMP® ▸ Conductor entry direction to mating direction: 0 ° ▸ Color: light gray



- Intuitive and tool-free lever actuation
- Universal connection for all conductor types
- Push-in termination of solid and ferruled conductors
- Just 11.5 mm tall
- Test slot 0° and 90° to conductor entry
- 100% protected against mismating
- Codable

Electrical data			
Ratings per	**IEC/EN 60664-1**		
Overvoltage category	III	III	II
Pollution degree	3	2	2
Nominal voltage	320 V	320 V	630 V
Rated impulse withstand voltage	4 kV	4 kV	4 kV
Rated current	16 A	16 A	16 A
Approvals per	**UL 1059**		
Use group	B	C	D
Rated voltage	300 V	-	300 V
Rated current	20 A	-	10 A
Approvals per	**CSA**		
Use group	B	C	D
Rated voltage	300 V	-	300 V
Rated current	20 A	-	10 A

Connection Data	
Connection technology	Push-in CAGE CLAMP®
Strip length	11 … 12 mm / 0.43 … 0.47 inches
Solid conductor	0.2 … 2.5 mm² / 24 … 12 AWG
Fine-stranded conductor	0.2 … 2.5 mm² / 24 … 12 AWG
Fine-stranded conductor; with insulated ferrule	0.25 … 1.5 mm²
Fine-stranded conductor; with uninsulated ferrule	0.25 … 2.5 mm²

Material data	
Material group	I
Insulation material (main housing)	Polyamide (PA66)
Flammability class per UL94	V0
Clamping spring material	Chrome-nickel spring steel (CrNi)
Contact material	Copper alloy
Contact Plating	Tin

Environmental requirements	
Limit temperature range	-60 … +100 °C
Processing temperature	-35 … +60 °C

Note:
The *MCS – MULTI CONNECTION SYSTEM* includes connectors without breaking capacity in accordance with DIN EN 61984. When used as intended, these connectors must not be connected/disconnected when live or under load.When used as intended, these connectors must not be connected/disconnected when live or under load. The circuit design should ensure header pins, which can be touched, are not live when unmated.

Insulation stop	Page 640
Locking system	Page 643
Marking	Page 1067
Strain relief	Page 645
Test and measurement	Page 653, 1088
Tool	Page 636, 1072

See technical section for further information

Approvals and corresponding ratings, visit www.wago.com

1-conductor female connector ▸ *MCS* MIDI ▸ 2721 Series

Pin spacing: 5 mm / 0.197 inches ▸ Actuation type: Lever ▸ Push-in CAGE CLAMP® ▸ Conductor entry direction to mating direction: 0 ° ▸ Color: light gray

	Locking of plug-in connection: Lateral locking lever



2721-1106/326-000

Pole number	Item No.	PU
2	2721-1102/326-000	100
3	2721-1103/326-000	100
4	2721-1104/326-000	100
5	2721-1105/326-000	50
6	2721-1106/326-000	50
7	2721-1107/326-000	50
8	2721-1108/326-000	50
10	2721-1110/326-000	50
12	2721-1112/326-000	25
16	2721-1116/326-000	25

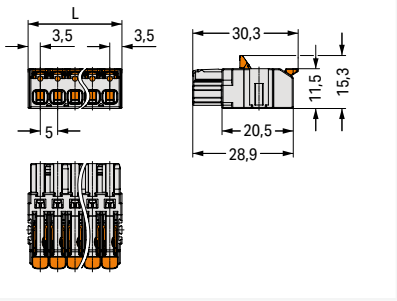

L = (pole no. x pin spacing) + 2 mm
2- and 3-pole female connectors – one latch only



2721-1106/037-000

Pole number	Item No.	PU
2	2721-1102/037-000	100
3	2721-1103/037-000	100
4	2721-1104/037-000	50
5	2721-1105/037-000	50
6	2721-1106/037-000	50
7	2721-1107/037-000	50
8	2721-1108/037-000	50
10	2721-1110/037-000	50
12	2721-1112/037-000	25
16	2721-1116/037-000	25

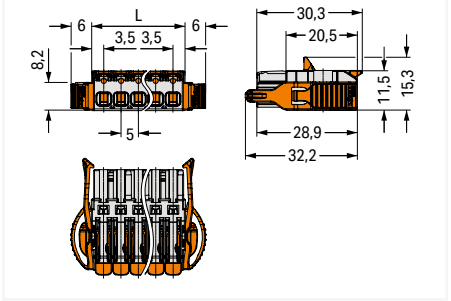

L = (pole no. x pin spacing) + 2 mm
2- and 3-pole female connectors – one latch only

8

PU = packaging unit; SPU = subpackaging unit

Variants:
- Other pole numbers
- Other versions (or variants) can be requested from WAGO Sales or configured at https://configurator.wago.com/.

1-conductor male connector ▸ *MCS* MIDI ▸ 721 Series

Pin spacing: 5 mm / 0.197 inches ▸ Actuation type: Operating tool ▸ CAGE CLAMP® ▸ Conductor entry direction to mating direction: 0 ° ▸ Color: light gray

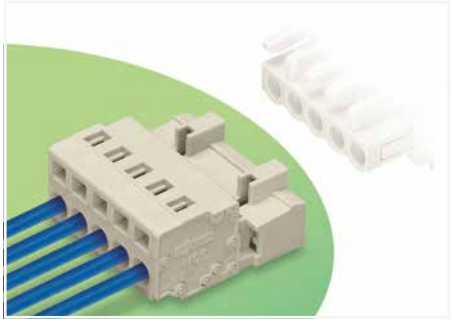

- Universal connection for all conductor types
- Easy cable pre-assembly and on-unit wiring via vertical and horizontal CAGE CLAMP® actuation
- For wire-to-wire and board-to-wire connections
- Versions available with snap-in mounting feet or flanges for panel or through-panel mounting
- 3- to 5-pole male connectors are also available with preceding ground contact
- 100 % protected against mismating
- With coding fingers

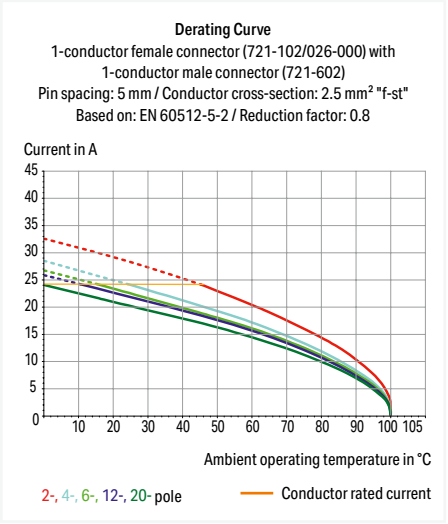

Electrical data			
Ratings per	**IEC/EN 60664-1**		
Overvoltage category	III	III	II
Pollution degree	3	2	2
Nominal voltage	320 V	320 V	630 V
Rated impulse withstand voltage	4 kV	4 kV	4 kV
Rated current	12 A	12 A	12 A
Approvals per	**UL 1059**		
Use group	B	C	D
Rated voltage	300 V	-	300 V
Rated current	15 A	-	10 A
Approvals per	**CSA**		
Use group	B	C	D
Rated voltage	300 V	-	300 V
Rated current	15 A	-	10 A

Connection Data	
Connection technology	CAGE CLAMP®
Strip length	8 … 9 mm / 0.31 … 0.35 inches
Solid conductor	0.08 … 2.5 mm² / 28 … 12 AWG
Fine-stranded conductor	0.08 … 2.5 mm² / 28 … 12 AWG
Fine-stranded conductor; with insulated ferrule	0.25 … 1.5 mm²
Fine-stranded conductor; with uninsulated ferrule	0.25 … 2.5 mm²

Material data	
Material group	I
Insulation material (main housing)	Polyamide (PA66)
Flammability class per UL94	V0
Clamping spring material	Chrome-nickel spring steel (CrNi)
Contact material	Electrolytic copper (E_{Cu})
Contact Plating	Tin

Environmental requirements	
Limit temperature range	-60 … +100 °C
Processing temperature	-35 … +60 °C

Note:
The *MCS – MULTI CONNECTION SYSTEM* includes connectors without breaking capacity in accordance with DIN EN 61984. When used as intended, these connectors must not be connected/disconnected when live or under load.When used as intended, these connectors must not be connected/disconnected when live or under load. The circuit design should ensure header pins, which can be touched, are not live when unmated.

Coding	Page 638
Cover	Page 639
Ferrule	Page 1081
Installation	Page 641, 1071
Insulation stop	Page 640
Jumper	Page 650
Marking	Page 1067
Mounting adapter	Page 642
Strain relief	Page 649
Tool	Page 636, 1072
Cutout dimensions	Page 632
Direct marking	Page 628
See technical section for further information	
Approvals and corresponding ratings, visit www.wago.com	

1-conductor male connector ▸ *MCS* MIDI ▸ 721 Series

Pin spacing: 5 mm / 0.197 inches ▸ Actuation type: Operating tool ▸ CAGE CLAMP® ▸ Conductor entry direction to mating direction: 0 ° ▸ Color: light gray

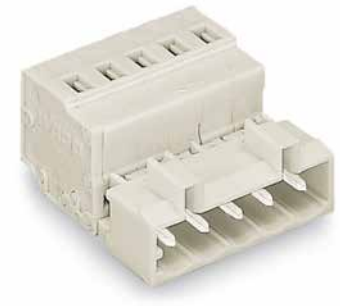

721-605

Pole number	Item No.	PU
2	721-602	100
3	721-603	100
4	721-604	100
5	721-605	50
6	721-606	50
7	721-607	50
8	721-608	50
9	721-609	50
10	721-610	50
11	721-611	25
12	721-612	25
13	721-613	25
14	721-614	25
15	721-615	25
16	721-616	25
20	721-620	10

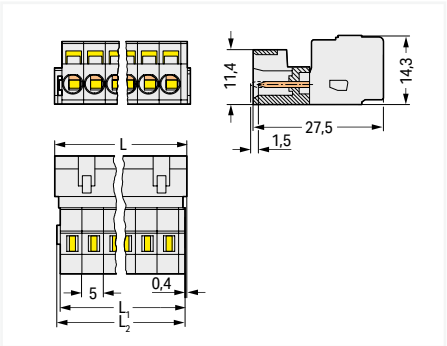

L = (pole no. – 1) x pin spacing + 8.2 mm
L_2 = L – 1.7 mm
L_3 = L – 1.2 mm

Mounting type: Panel mounting ▸ Mounting type: Snap-in foot

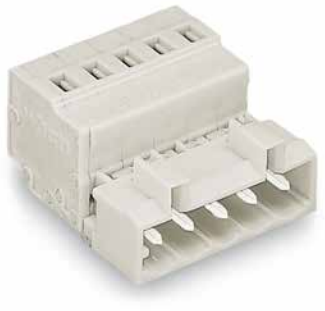

721-605/018-000

Pole number	Item No.	PU
2	721-602/018-000	100
3	721-603/018-000	100
4	721-604/018-000	100
5	721-605/018-000	50
6	721-606/018-000	50
7	721-607/018-000	50
8	721-608/018-000	50
9	721-609/018-000	50
10	721-610/018-000	50
11	721-611/018-000	25
12	721-612/018-000	25
13	721-613/018-000	25
14	721-614/018-000	25
15	721-615/018-000	25
16	721-616/018-000	25
20	721-620/018-000	10

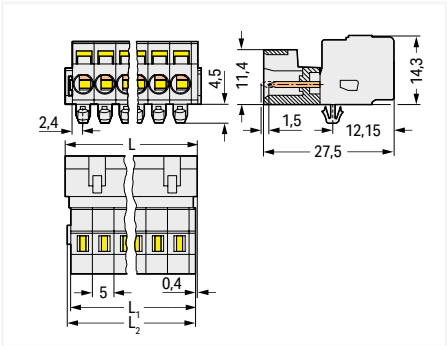

L = (pole no. – 1) x pin spacing + 8.2 mm
L_2 = L – 1.7 mm
L_3 = L – 1.2 mm

Mounting type: Feed-through mounting; Panel mounting ▸ Mounting type: Mounting flange

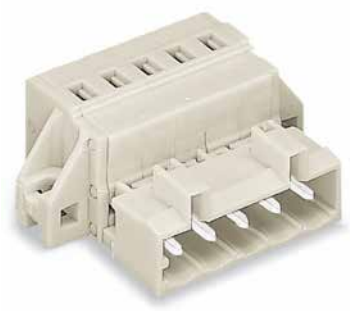

721-606/019-000

Pole number	Item No.	PU
2	721-602/019-000	100
3	721-603/019-000	50
4	721-604/019-000	50
5	721-605/019-000	50
6	721-606/019-000	50
7	721-607/019-000	50
8	721-608/019-000	50
9	721-609/019-000	25
10	721-610/019-000	25
11	721-611/019-000	25
12	721-612/019-000	25
13	721-613/019-000	25
14	721-614/019-000	25
15	721-615/019-000	25
16	721-616/019-000	10
20	721-620/019-000	10

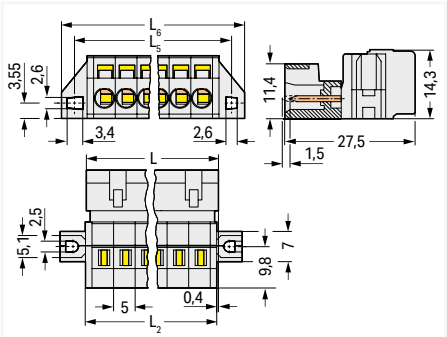

L = (pole no. – 1) x pin spacing + 8.2 mm
L_2 = L – 0.2 mm
L_5 = L_2 + 5.8 mm
L_6 = L_2 + 11.8 mm

8

PU = packaging unit; SPU = subpackaging unit; Dimensions in mm

Variants:
- Other pole numbers
- Gold-plated or partially gold-plated contact surfaces
- Other versions (or variants) can be requested from WAGO Sales or configured at https://configurator.wago.com/.

1-conductor male connector ▸ *MCS* MIDI ▸ 721 Series

Pin spacing: 5 mm / 0.197 inches ▸ Actuation type: Operating tool ▸ CAGE CLAMP® ▸ Conductor entry direction to mating direction: 0 ° ▸ Color: light gray

Mounting type: Feed-through mounting ▸ Mounting type: Snap-in flange

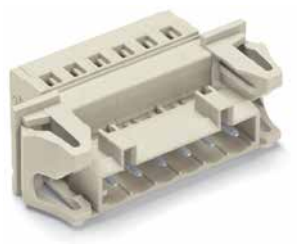

721-606/114-000

Pole number	Item No.	PU (SPU)
2	**721-602/114-000**	50
3	**721-603/114-000**	50
4	**721-604/114-000**	50
5	**721-605/114-000**	50
6	**721-606/114-000**	50
7	**721-607/114-000**	25
8	**721-608/114-000**	25
9	**721-609/114-000**	25
10	**721-610/114-000**	25
11	**721-611/114-000**	25
12	**721-612/114-000**	25 (18)
13	**721-613/114-000**	25
14	**721-614/114-000**	25
15	**721-615/114-000**	10
16	**721-616/114-000**	10
20	**721-620/114-000**	10

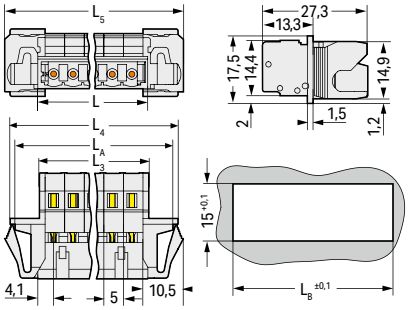

L = (pole no. x pin spacing) + 3.2 mm
L_3 = L – 0.2 mm
L_4 = L_3 + 15.2 mm
L_5 = L_3 + 18 mm
L_A = L_3 + 12.6 mm
L_B = L_3 + 13.2 mm

PU = packaging unit; SPU = subpackaging unit; Dimensions in mm

Variants:
- Other pole numbers
- Gold-plated or partially gold-plated contact surfaces
- Other versions (or variants) can be requested from WAGO Sales or configured at https://configurator.wago.com/.

1-conductor male connector ▸ *MCS* MIDI ▸ 721 Series

Pin spacing: 5 mm / 0.197 inches ▸ Actuation type: Operating tool ▸ CAGE CLAMP® ▸ Preceding PE contact ▸ Conductor entry direction to mating direction: 0 ° ▸ Color: light gray

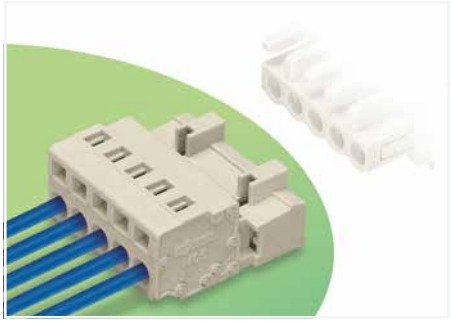

- Universal connection for all conductor types
- Easy cable pre-assembly and on-unit wiring via vertical and horizontal CAGE CLAMP® actuation
- For wire-to-wire and board-to-wire connections
- Versions available with snap-in mounting feet or flanges for panel or through-panel mounting
- 3- to 5-pole male connectors are also available with preceding ground contact
- 100 % protected against mismating
- With coding fingers

Derating Curve
1-conductor female connector (721-102/026-000) with
1-conductor male connector (721-602)
Pin spacing: 5 mm / Conductor cross-section: 2.5 mm² "f-st"
Based on: EN 60512-5-2 / Reduction factor: 0.8

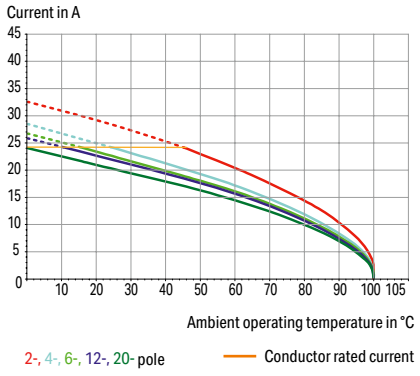

Electrical data			
Ratings per	**IEC/EN 60664-1**		
Overvoltage category	III	III	II
Pollution degree	3	2	2
Nominal voltage	320 V	320 V	630 V
Rated impulse withstand voltage	4 kV	4 kV	4 kV
Rated current	12 A	12 A	12 A
Approvals per	**UL 1059**		
Use group	B	C	D
Rated voltage	300 V	-	300 V
Rated current	15 A	-	10 A
Approvals per	**CSA**		
Use group	B	C	D
Rated voltage	300 V	-	300 V
Rated current	15 A	-	10 A

Connection Data	
Connection technology	CAGE CLAMP®
Strip length	8 … 9 mm / 0.31 … 0.35 inches
Solid conductor	0.08 … 2.5 mm² / 28 … 12 AWG
Fine-stranded conductor	0.08 … 2.5 mm² / 28 … 12 AWG
Fine-stranded conductor; with insulated ferrule	0.25 … 1.5 mm²
Fine-stranded conductor; with uninsulated ferrule	0.25 … 2.5 mm²

Material data	
Material group	I
Insulation material (main housing)	Polyamide (PA66)
Flammability class per UL94	V0
Clamping spring material	Chrome-nickel spring steel (CrNi)
Contact material	Electrolytic copper (E_{Cu})
Contact Plating	Tin

Environmental requirements	
Limit temperature range	-60 … +100 °C
Processing temperature	-35 … +60 °C

Note:
The *MCS – MULTI CONNECTION SYSTEM* includes connectors without breaking capacity in accordance with DIN EN 61984. When used as intended, these connectors must not be connected/disconnected when live or under load.When used as intended, these connectors must not be connected/disconnected when live or under load. The circuit design should ensure header pins, which can be touched, are not live when unmated.

Coding	Page 638
Cover	Page 639
Ferrule	Page 1081
Installation	Page 641, 1071
Insulation stop	Page 640
Jumper	Page 650
Mounting adapter	Page 642
Strain relief	Page 649
Tool	Page 636, 1072
Direct marking	Page 628
Cutout dimensions	Page 632
See technical section for further information	
Approvals and corresponding ratings, visit www.wago.com	

1-conductor male connector ▸ *MCS* MIDI ▸ 721 Series

Pin spacing: 5 mm / 0.197 inches ▸ Actuation type: Operating tool ▸ CAGE CLAMP® ▸ Preceding PE contact ▸ Conductor entry direction to mating direction: 0 ° ▸ Color: light gray

	Mounting type: Panel mounting ▸ Mounting type: Snap-in foot	Mounting type: Feed-through mounting; Panel mounting ▸ Mounting type: Mounting flange

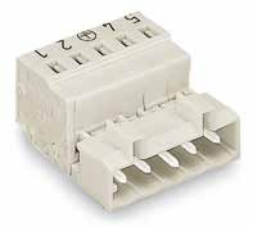

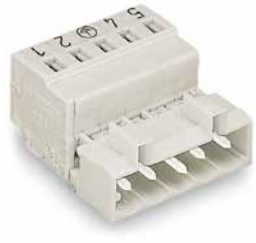



721-605/000-042

Pole number	Item No.	PU
3	721-603/000-042	100
4	721-604/000-042	100
5	721-605/000-042	50

721-605/018-042

Pole number	Item No.	PU
3	721-603/018-042	100
4	721-604/018-042	100
5	721-605/018-042	50

721-605/019-042

Pole number	Item No.	PU
3	721-603/019-042	50
4	721-604/019-042	50
5	721-605/019-042	50

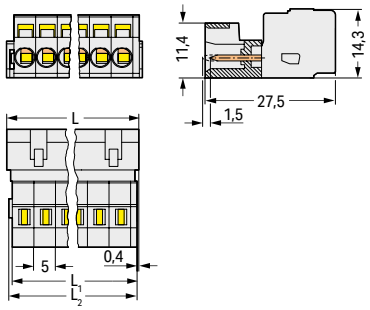

L = (pole no. – 1) x pin spacing + 8.2 mm
L_2 = L – 1.7 mm
L_3 = L – 1.2 mm

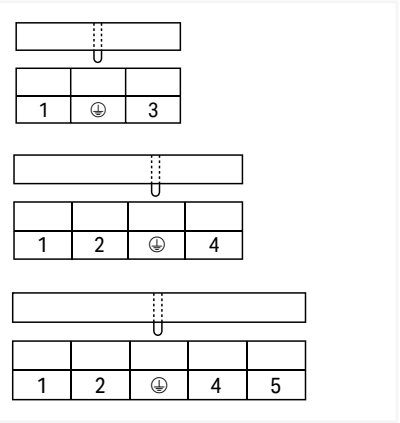

Preceding PE contact position

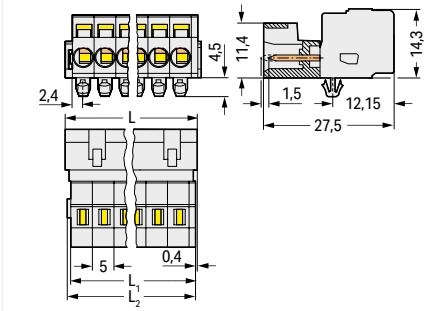

L = (pole no. – 1) x pin spacing + 8.2 mm
L_2 = L – 1.7 mm
L_3 = L – 1.2 mm

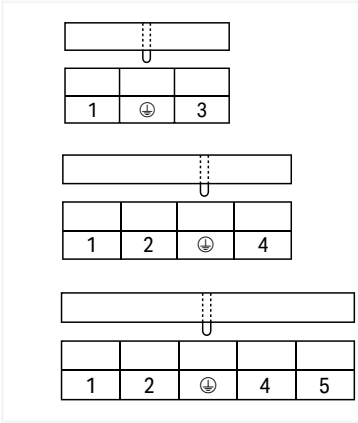

Preceding PE contact position

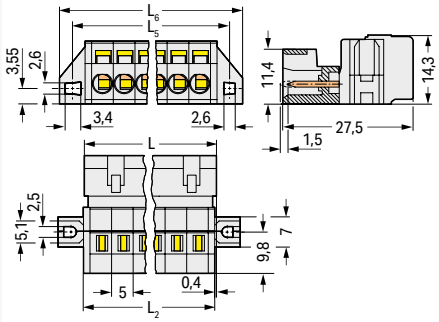

L = (pole no. – 1) x pin spacing + 8.2 mm
L_2 = L – 0.2 mm
L_5 = L_2 + 5.8 mm
L_6 = L_2 + 11.8 mm

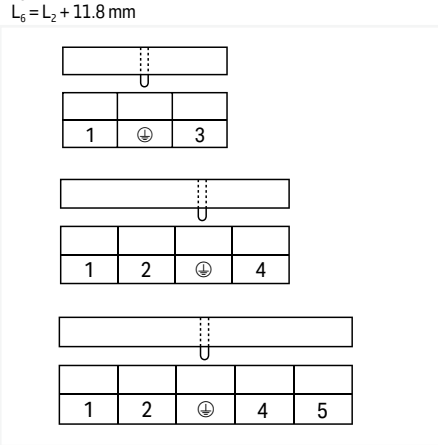

Preceding PE contact position

PU = packaging unit; SPU = subpackaging unit; Dimensions in mm

Variants:
- Other pole numbers
- Gold-plated or partially gold-plated contact surfaces
- Other versions (or variants) can be requested from WAGO Sales or configured at https://configurator.wago.com/.

8

1-conductor male connector ▸ *MCS* MIDI ▸ 721 Series

Pin spacing: 5 mm / 0.197 inches ▸ Actuation type: Operating tool ▸ CAGE CLAMP® ▸ Preceding PE contact ▸ Conductor entry direction to mating direction: 0 ° ▸ Color: light gray

Mounting type: Feed-through mounting ▸ Mounting type: Snap-in flange

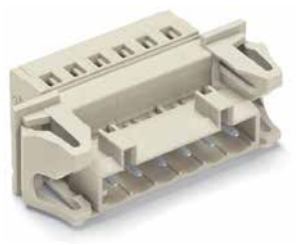

721-606/114-000

Pole number	Item No.	PU
3	**721-603/114-042**	50
4	**721-604/114-042**	50
5	**721-605/114-042**	50

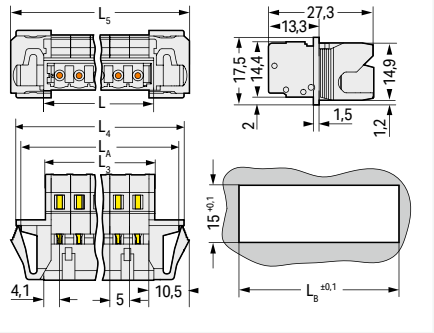

L = (pole no. x pin spacing) + 3.2 mm
L_3 = L – 0.2 mm
L_4 = L_3 + 15.2 mm
L_5 = L_3 + 18 mm
L_A = L_3 + 12.6 mm
L_B = L_3 + 13.2 mm

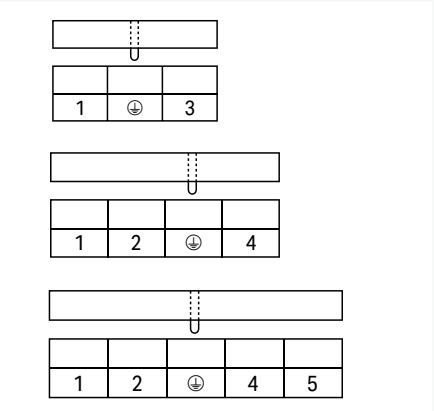

Preceding PE contact position

PU = packaging unit; SPU = subpackaging unit; Dimensions in mm

Variants:
- Other pole numbers
- Gold-plated or partially gold-plated contact surfaces
- Other versions (or variants) can be requested from WAGO Sales or configured at https://configurator.wago.com/.

1-conductor male connector ▸ *MCS* MIDI ▸ 2721 Series

Pin spacing: 5 mm / 0.197 inches ▸ Actuation type: Lever ▸ Push-in CAGE CLAMP® ▸ Conductor entry direction to mating direction: 0 ° ▸ Color: light gray



- Intuitive, tool-free lever actuation
- Universal connection for all conductor types
- Push-in termination of solid conductors and fine-stranded conductors with ferrules
- Installation height: just 11.5 mm
- Test opening at 0° and 90° to conductor entry
- 100% protected against mismating
- Can be coded

Electrical data				
Ratings per	**IEC/EN 60664-1**			
Overvoltage category	III	III	II	
Pollution degree	3	2	2	
Nominal voltage	320 V	320 V	630 V	
Rated impulse withstand voltage	4 kV	4 kV	4 kV	
Rated current	16 A	16 A	16 A	
Approvals per	**UL 1059**			
Use group	B	C	D	
Rated voltage	300 V	-	300 V	
Rated current	16 A	-	10 A	

Connection Data	
Connection technology	Push-in CAGE CLAMP®
Strip length	11 … 12 mm / 0.43 … 0.47 inches
Solid conductor	0.2 … 2.5 mm² / 24 … 12 AWG
Fine-stranded conductor	0.2 … 2.5 mm² / 24 … 12 AWG
Fine-stranded conductor; with insulated ferrule	0.25 … 1.5 mm²
Fine-stranded conductor; with uninsulated ferrule	0.25 … 2.5 mm²

Material data	
Material group	I
Insulation material (main housing)	Polyamide (PA66)
Flammability class per UL94	V0
Clamping spring material	Chrome-nickel spring steel (CrNi)
Contact material	Electrolytic copper (E_{Cu})
Contact Plating	Tin

Environmental requirements	
Limit temperature range	-60 … +100 °C
Processing temperature	-35 … +60 °C

Note:
The *MCS – MULTI CONNECTION SYSTEM* includes connectors without breaking capacity in accordance with DIN EN 61984. When used as intended, these connectors must not be connected/disconnected when live or under load.When used as intended, these connectors must not be connected/disconnected when live or under load. The circuit design should ensure header pins, which can be touched, are not live when unmated.

Coding	Page 638
Cover	Page 639
Ferrule	Page 1081
Insulation stop	Page 640
Jumper	Page 650
Marking	Page 1067
Strain relief	Page 645
Tool	Page 636, 1072
Direct marking	Page 628
See technical section for further information	
Approvals and corresponding ratings, visit www.wago.com	

1-conductor male connector ▸ *MCS* MIDI ▸ 2721 Series

Pin spacing: 5 mm / 0.197 inches ▸ Actuation type: Lever ▸ Push-in CAGE CLAMP® ▸ Conductor entry direction to mating direction: 0 ° ▸ Color: light gray

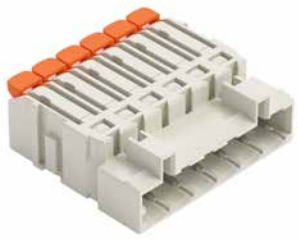

2721-1606

Pole number	Item No.	PU
2	**2721-1602**	100
3	**2721-1603**	100
4	**2721-1604**	100
5	**2721-1605**	50
6	**2721-1606**	50
7	**2721-1607**	50
8	**2721-1608**	50
10	**2721-1610**	25
12	**2721-1612**	25
16	**2721-1616**	25

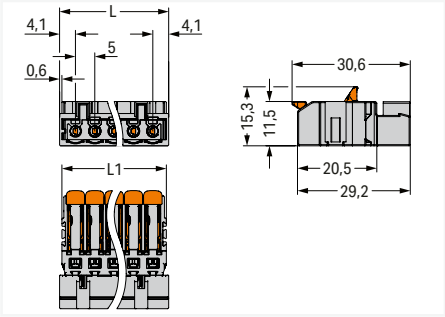

L1 = (pole no. x pin spacing) + 3.2 mm
L2 = (pole no. x pin spacing) + 2 mm

PU = packaging unit; SPU = subpackaging unit; Dimensions in mm

Variants:
- Other pole numbers
- Gold-plated or partially gold-plated contact surfaces
- Other versions (or variants) can be requested from WAGO Sales or configured at https://configurator.wago.com/.

1-conductor male connector ▸ *MCS* MIDI ▸ 2721 Series

Pin spacing: 5 mm / 0.197 inches ▸ Actuation type: Lever ▸ Push-in CAGE CLAMP® ▸ Preceding contact ▸ Conductor entry direction to mating direction: 0 ° ▸ Color: light gray



- Intuitive und werkzeuglose Hebelbetätigung
- Universalanschluss für alle Leiterarten
- Direktes Stecken eindrähtiger Leiter und feindrähtiger Leiter mit Aderendhülsen
- Bauhöhe nur 11,5 mm
- Prüföffnung 0° und 90° zur Leitereinführung
- 100 % fehlsteckgeschützt
- Kodierbar

Electrical data			
Ratings per	**IEC/EN 60664-1**		
Overvoltage category	III	III	II
Pollution degree	3	2	2
Nominal voltage	320 V	320 V	630 V
Rated impulse withstand voltage	4 kV	4 kV	4 kV
Rated current	16 A	16 A	16 A
Approvals per	**UL 1059**		
Use group	B	C	D
Rated voltage	300 V	-	300 V
Rated current	16 A	-	10 A

Connection Data	
Connection technology	Push-in CAGE CLAMP®
Strip length	11 … 12 mm / 0.43 … 0.47 inches
Solid conductor	0.2 … 2.5 mm² / 24 … 12 AWG
Fine-stranded conductor	0.2 … 2.5 mm² / 24 … 12 AWG
Fine-stranded conductor; with insulated ferrule	0.25 … 1.5 mm²
Fine-stranded conductor; with uninsulated ferrule	0.25 … 2.5 mm²

Material data	
Material group	I
Insulation material (main housing)	Polyamide (PA66)
Flammability class per UL94	V0
Clamping spring material	Chrome-nickel spring steel (CrNi)
Contact material	Electrolytic copper (E_{Cu})
Contact Plating	Tin

Environmental requirements	
Limit temperature range	-60 … +100 °C
Processing temperature	-35 … +60 °C

Note:
The *MCS – MULTI CONNECTION SYSTEM* includes connectors without breaking capacity in accordance with DIN EN 61984. When used as intended, these connectors must not be connected/disconnected when live or under load.When used as intended, these connectors must not be connected/disconnected when live or under load. The circuit design should ensure header pins, which can be touched, are not live when unmated.

Coding	Page 638
Cover	Page 639
Ferrule	Page 1081
Insulation stop	Page 640
Jumper	Page 650
Marking	Page 1067
Strain relief	Page 645
Tool	Page 636, 1072
Direct marking	Page 628
See technical section for further information	
Approvals and corresponding ratings, visit www.wago.com	

1-conductor male connector ▸ *MCS* MIDI ▸ 2721 Series

Pin spacing: 5 mm / 0.197 inches ▸ Actuation type: Lever ▸ Push-in CAGE CLAMP® ▸ Preceding contact ▸ Conductor entry direction to mating direction: 0 ° ▸ Color: light gray



2721-1605/000-040

Pole number	Item No.	PU
3	**2721-1603/000-040**	100
3	**2721-1603/000-043**	100
4	**2721-1604/000-040**	100
4	**2721-1604/000-043**	100
5	**2721-1605/000-043**	50
5	**2721-1605/000-040**	50

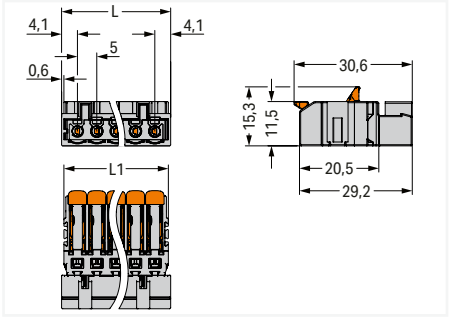

L1 = (pole no. x pin spacing) + 3.2 mm
L2 = (pole no. x pin spacing) + 2 mm

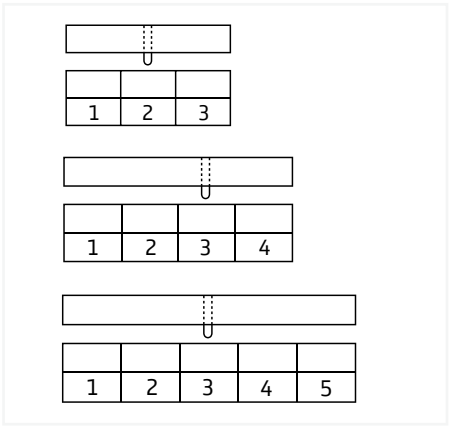

PU = packaging unit; SPU = subpackaging unit; Dimensions in mm

Variants:
- Other pole numbers
- Gold-plated or partially gold-plated contact surfaces
- Other versions (or variants) can be requested from WAGO Sales or configured at https://configurator.wago.com/.

1-conductor male connector ▸ *MCS* MIDI ▸ 2721 Series

Pin spacing: 5 mm / 0.197 inches ▸ Actuation type: Lever ▸ Push-in CAGE CLAMP® ▸ Preceding PE contact ▸ Conductor entry direction to mating direction: 0 ° ▸ Color: light gray



- ▪ Intuitive und werkzeuglose Hebelbetätigung
- ▪ Universalanschluss für alle Leiterarten
- ▪ Direktes Stecken eindrähtiger Leiter und feindrähtiger Leiter mit Aderendhülsen
- ▪ Bauhöhe nur 11,5 mm
- ▪ Prüföffnung 0° und 90° zur Leitereinführung
- ▪ 100 % fehlsteckgeschützt
- ▪ Kodierbar

Electrical data			
Ratings per	**IEC/EN 60664-1**		
Overvoltage category	III	III	II
Pollution degree	3	2	2
Nominal voltage	320 V	320 V	630 V
Rated impulse withstand voltage	4 kV	4 kV	4 kV
Rated current	16 A	16 A	16 A
Approvals per	**UL 1059**		
Use group	B	C	D
Rated voltage	300 V	-	300 V
Rated current	16 A	-	10 A

Connection Data	
Connection technology	Push-in CAGE CLAMP®
Strip length	11 … 12 mm / 0.43 … 0.47 inches
Solid conductor	0.2 … 2.5 mm² / 24 … 12 AWG
Fine-stranded conductor	0.2 … 2.5 mm² / 24 … 12 AWG
Fine-stranded conductor; with insulated ferrule	0.25 … 1.5 mm²
Fine-stranded conductor; with uninsulated ferrule	0.25 … 2.5 mm²

Material data	
Material group	I
Insulation material (main housing)	Polyamide (PA66)
Flammability class per UL94	V0
Clamping spring material	Chrome-nickel spring steel (CrNi)
Contact material	Electrolytic copper (E_{Cu})
Contact Plating	Tin

Environmental requirements	
Limit temperature range	-60 … +100 °C
Processing temperature	-35 … +60 °C

Note:
The *MCS – MULTI CONNECTION SYSTEM* includes connectors without breaking capacity in accordance with DIN EN 61984. When used as intended, these connectors must not be connected/disconnected when live or under load.When used as intended, these connectors must not be connected/disconnected when live or under load. The circuit design should ensure header pins, which can be touched, are not live when unmated.

Coding	Page 638
Cover	Page 639
Ferrule	Page 1081
Insulation stop	Page 640
Jumper	Page 650
Marking	Page 1067
Strain relief	Page 645
Tool	Page 636, 1072
Direct marking	Page 628
See technical section for further information	
Approvals and corresponding ratings, visit www.wago.com	

1-conductor male connector ▸ *MCS* MIDI ▸ 2721 Series

Pin spacing: 5 mm / 0.197 inches ▸ Actuation type: Lever ▸ Push-in CAGE CLAMP® ▸ Preceding PE contact ▸ Conductor entry direction to mating direction: 0 ° ▸ Color: light gray

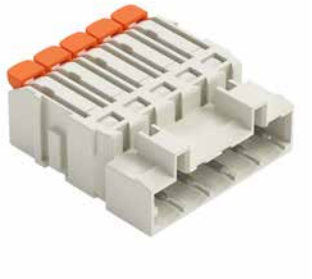

2721-1605/000-040

Pole number	Item No.	PU
3	**2721-1603/000-041**	100
3	**2721-1603/000-042**	100
4	**2721-1604/000-041**	100
4	**2721-1604/000-042**	100
5	**2721-1605/000-041**	50
5	**2721-1605/000-042**	50

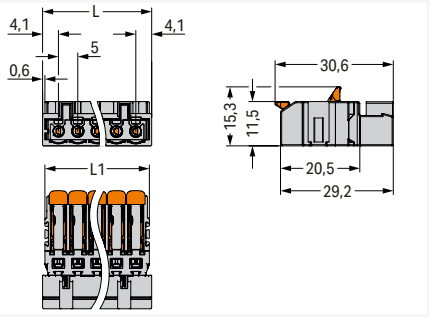

L1 = (pole no. x pin spacing) + 3.2 mm
L2 = (pole no. x pin spacing) + 2 mm

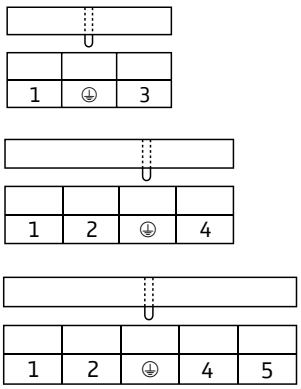

PU = packaging unit; SPU = subpackaging unit; Dimensions in mm

Variants:
- Other pole numbers
- Gold-plated or partially gold-plated contact surfaces
- Other versions (or variants) can be requested from WAGO Sales or configured at https://configurator.wago.com/.

THT female header ▸ *MCS* MIDI ▸ 722 Series

Pin spacing: 5 mm / 0.197 inches ▸ Solder pin dimensions: 0.6 x 1 mm ▸ Solder pin length: 5 mm ▸ Color: light gray

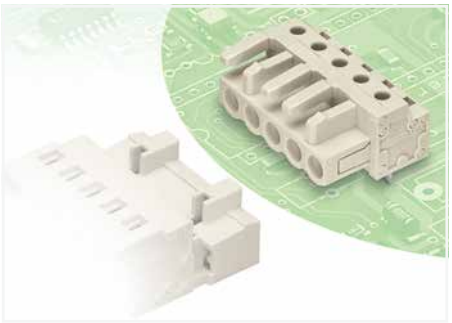

- Horizontal or vertical PCB mounting via straight or angled solder pins
- For board-to-board and board-to-wire connections
- Touch-proof PCB outputs
- Easy-to-identify PCB inputs and outputs
- 100 % protected against mismating
- With coding fingers

Derating Curve
THT female header (722-232) with
1-conductor male connector (721-602)
Pin spacing: 5 mm / Conductor cross-section: 2.5 mm² "f-st"
Based on: EN 60512-5-2 / Reduction factor: 0.8

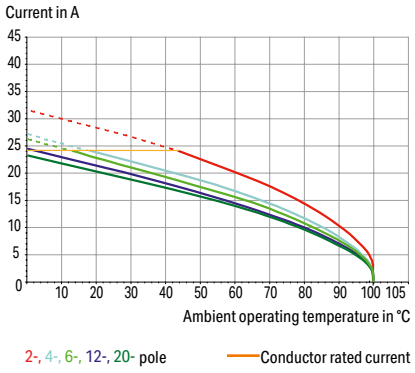

Electrical data			
Ratings per	**IEC/EN 60664-1**		
Overvoltage category	III	III	II
Pollution degree	3	2	2
Nominal voltage	320 V	320 V	630 V
Rated impulse withstand voltage	4 kV	4 kV	4 kV
Rated current	12 A	12 A	12 A
Approvals per	**UL 1059**		
Use group	B	C	D
Rated voltage	300 V	-	300 V
Rated current	16 A	-	10 A
Ratings			
Approvals per	UL 1977		
Rated voltage	600 V		
Rated current	15 A		
Approvals per	**CSA**		
Use group	B	C	D
Rated voltage	300 V	-	300 V
Rated current	15 A	-	10 A

Material data	
Material group	I
Insulation material (main housing)	Polyamide (PA66)
Flammability class per UL94	V0
Contact material	Copper alloy
Contact Plating	Tin

Mechanical data	
Solder pin arrangement	over the entire female connector (in-line)
Number of solder pins per potential	1
Solder pin length	5 mm
Solder pin dimensions	0.6 x 1 mm
Drilled hole diameter	1.3 $^{(+0.1)}$ mm

Environmental requirements	
Limit temperature range	-60 … +100 °C
Processing temperature	-35 … +60 °C

Note:
The *MCS – MULTI CONNECTION SYSTEM* includes connectors without breaking capacity in accordance with DIN EN 61984. When used as intended, these connectors must not be connected/disconnected when live or under load.When used as intended, these connectors must not be connected/disconnected when live or under load. The circuit design should ensure header pins, which can be touched, are not live when unmated.

Installation	Page 641, 1071
Test and measurement	Page 653, 1088
Cutout dimensions	Page 632
See technical section for further information	
Approvals and corresponding ratings, visit www.wago.com	

THT female header ▸ *MCS* MIDI ▸ 722 Series

Pin spacing: 5 mm / 0.197 inches ▸ Solder pin dimensions: 0.6 x 1 mm ▸ Solder pin length: 5 mm ▸ Color: light gray

Mating direction to the PCB: 0 °



722-235

Pole number	Item No.	PU
2	722-232	100
3	722-233	100
4	722-234	100
5	722-235	100
6	722-236	50
7	722-237	50
8	722-238	50
9	722-239	50
10	722-240	50
11	722-241	25
12	722-242	25
13	722-243	25
14	722-244	25
15	722-245	25
16	722-246	25
20	722-250	10

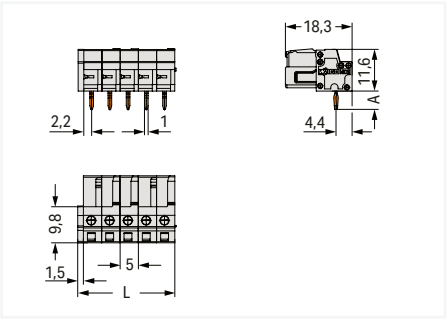

L = (pole no. x pin spacing) + 1.5 mm
2-pole female connectors – one latch only

Mating direction to the PCB: 90 °



722-135

Pole number	Item No.	PU
2	722-132	100
3	722-133	100
4	722-134	100
5	722-135	100
6	722-136	50
7	722-137	50
8	722-138	50
9	722-139	50
10	722-140	50
11	722-141	25
12	722-142	25
13	722-143	25
14	722-144	25
15	722-145	25
16	722-146	25
20	722-150	10

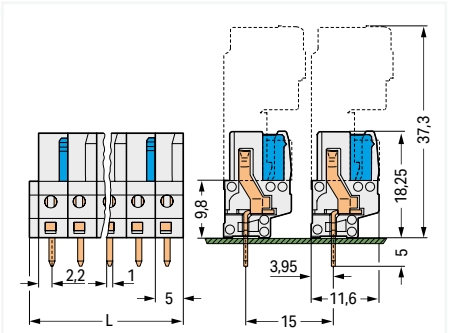

L = (pole no. x pin spacing) + 1.5 mm
2-pole female connectors – one latch only

Locking of plug-in connection: Locking lever ▸ Mating direction to the PCB: 0 °

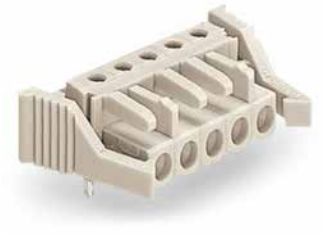

722-235/039-000

Pole number	Item No.	PU
2	722-232/039-000	100
3	722-233/039-000	50
4	722-234/039-000	50
5	722-235/039-000	50
6	722-236/039-000	50
7	722-237/039-000	50
8	722-238/039-000	50
9	722-239/039-000	25
10	722-240/039-000	25
11	722-241/039-000	25
12	722-242/039-000	25
13	722-243/039-000	25
14	722-244/039-000	25
15	722-245/039-000	25
16	722-246/039-000	10
20	722-250/039-000	10

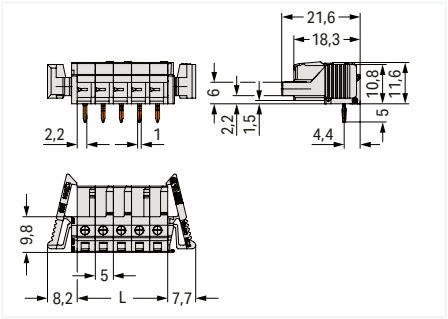

L = pole no. x pin spacing
2-pole female connectors – one latch only

8

PU = packaging unit; SPU = subpackaging unit; Dimensions in mm

Variants:

- Other pole numbers
- 3.8 mm pin projection for male headers with straight solder pins
- Gold-plated or partially gold-plated contact surfaces
- Other versions (or variants) can be requested from WAGO Sales or configured at https://configurator.wago.com/.

THT female header ▸ *MCS* MIDI ▸ 722 Series

Pin spacing: 5 mm / 0.197 inches ▸ Solder pin dimensions: 0.6 x 1 mm ▸ Solder pin length: 5 mm ▸ Color: light gray

Locking of plug-in connection: Locking lever ▸ Mating direction to the PCB: 90 °

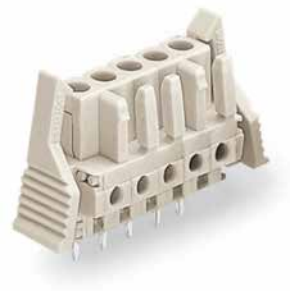

722-135/039-000

Pole number	Item No.	PU
2	722-132/039-000	100
3	722-133/039-000	50
4	722-134/039-000	50
5	722-135/039-000	50
6	722-136/039-000	50
7	722-137/039-000	50
8	722-138/039-000	50
9	722-139/039-000	25
10	722-140/039-000	25
11	722-141/039-000	25
12	722-142/039-000	25
13	722-143/039-000	25
14	722-144/039-000	25
15	722-145/039-000	25
16	722-146/039-000	10
20	722-150/039-000	10

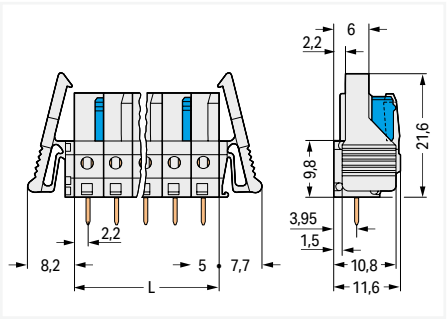

L = pole no. x pin spacing
2-pole female connectors – one latch only

Mounting type: Feed-through mounting; Panel mounting ▸ Mounting type: Mounting flange ▸ Mating direction to the PCB: 0 °



722-235/031-000

Pole number	Item No.	PU
2	722-232/031-000	100
3	722-233/031-000	50
4	722-234/031-000	50
5	722-235/031-000	50
6	722-236/031-000	50
7	722-237/031-000	50
8	722-238/031-000	50
9	722-239/031-000	25
10	722-240/031-000	25
11	722-241/031-000	25
12	722-242/031-000	25
13	722-243/031-000	25
14	722-244/031-000	25
15	722-245/031-000	25
16	722-246/031-000	10
20	722-250/031-000	10

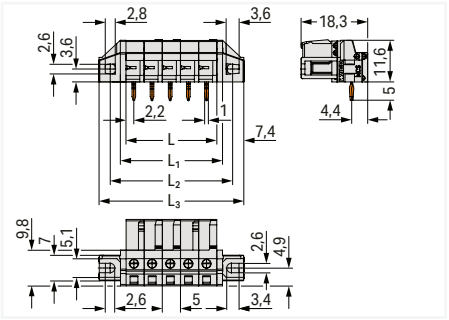

L = pole no. x pin spacing
L_1 = L + 3 mm
L_2 = L + 8.8 mm
L_3 = L + 14.8 mm
2-pole female connectors – one latch only

Mounting type: Feed-through mounting; Panel mounting ▸ Mounting type: Mounting flange ▸ Mating direction to the PCB: 90 °

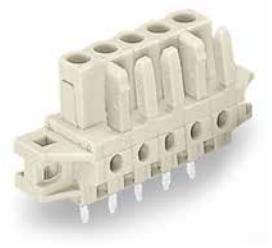

722-135/031-000

Pole number	Item No.	PU
2	722-132/031-000	100
3	722-133/031-000	50
4	722-134/031-000	50
5	722-135/031-000	50
6	722-136/031-000	50
7	722-137/031-000	50
8	722-138/031-000	50
9	722-139/031-000	25
10	722-140/031-000	25
11	722-141/031-000	25
12	722-142/031-000	25
13	722-143/031-000	25
14	722-144/031-000	25
15	722-145/031-000	25
16	722-146/031-000	10
20	722-150/031-000	10

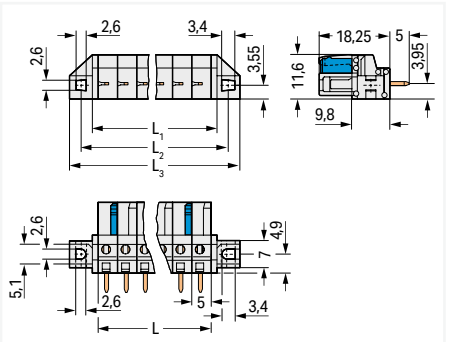

L = pole no. x pin spacing
L_1 = L + 3 mm
L_2 = L + 8.8 mm
L_3 = L + 14.8 mm
2-pole female connectors – one latch only

PU = packaging unit; SPU = subpackaging unit; Dimensions in mm

Variants:
- Other pole numbers
- 3.8 mm pin projection for male headers with straight solder pins
- Gold-plated or partially gold-plated contact surfaces
- Other versions (or variants) can be requested from WAGO Sales or configured at https://configurator.wago.com/.

THT female header ▸ *MCS* MIDI ▸ 722 Series

Pin spacing: 5 mm / 0.197 inches ▸ Solder pin dimensions: 0.6 x 1 mm ▸ Solder pin length: 5 mm ▸ Color: light gray

Mounting type: Flush feed-through mounting; Panel mounting ▸ Mounting type: Mounting flange ▸ Mating direction to the PCB: 0 °

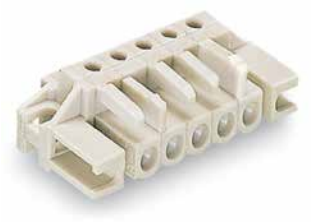

722-235/047-000

Pole number	Item No.	PU
2	**722-232/047-000**	100
3	**722-233/047-000**	50
4	**722-234/047-000**	50
5	**722-235/047-000**	50
6	**722-236/047-000**	50
7	**722-237/047-000**	50
8	**722-238/047-000**	50
9	**722-239/047-000**	25
10	**722-240/047-000**	25
11	**722-241/047-000**	25
12	**722-242/047-000**	25
13	**722-243/047-000**	25
14	**722-244/047-000**	25
15	**722-245/047-000**	25
16	**722-246/047-000**	10
20	**722-250/047-000**	10

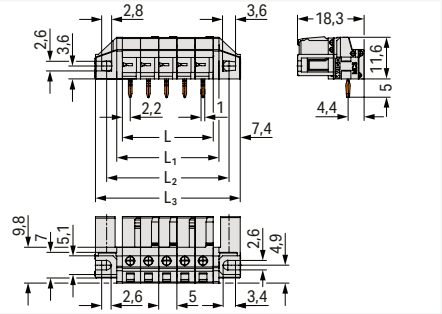

L = pole no. x pin spacing
L_1 = L + 3 mm
L_2 = L + 8.8 mm
L_3 = L + 14.8 mm
2-pole female connectors – one latch only

Mounting type: Flush feed-through mounting; Panel mounting ▸ Mounting type: Mounting flange ▸ Mating direction to the PCB: 90 °

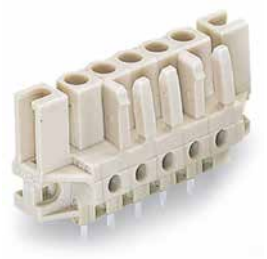

722-135/047-000

Pole number	Item No.	PU
2	**722-132/047-000**	100
3	**722-133/047-000**	50
4	**722-134/047-000**	50
5	**722-135/047-000**	50
6	**722-136/047-000**	50
7	**722-137/047-000**	50
8	**722-138/047-000**	50
9	**722-139/047-000**	25
10	**722-140/047-000**	25
11	**722-141/047-000**	25
12	**722-142/047-000**	25
13	**722-143/047-000**	25
14	**722-144/047-000**	25
15	**722-145/047-000**	25
16	**722-146/047-000**	10
20	**722-150/047-000**	10

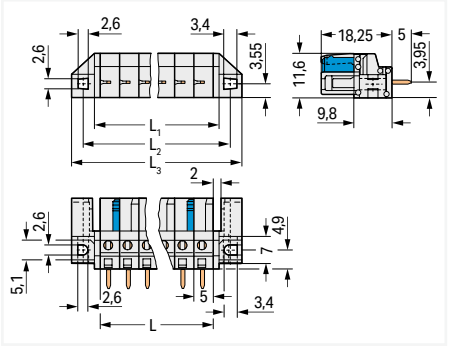

L = pole no. x pin spacing
L_1 = L + 3 mm
L_2 = L + 8.8 mm
L_3 = L + 14.8 mm
2-pole female connectors – one latch only

PU = packaging unit; SPU = subpackaging unit; Dimensions in mm

Variants:
- Other pole numbers
- 3.8 mm pin projection for male headers with straight solder pins
- Gold-plated or partially gold-plated contact surfaces
- Other versions (or variants) can be requested from WAGO Sales or configured at https://configurator.wago.com/.

THT male header ▸ *MCS* MIDI ▸ 721 Series

Pin spacing: 5 mm / 0.197 inches ▸ Solder pin dimensions: 1 x 1 mm ▸ Color: light gray

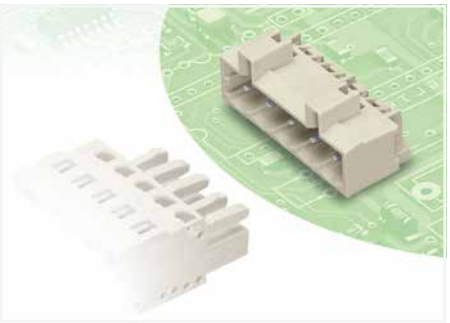

- Horizontal or vertical PCB mounting via straight or angled solder pins
- Pin cross-section: 1 x 1 mm
- 100 % protected against mismating
- With coding fingers

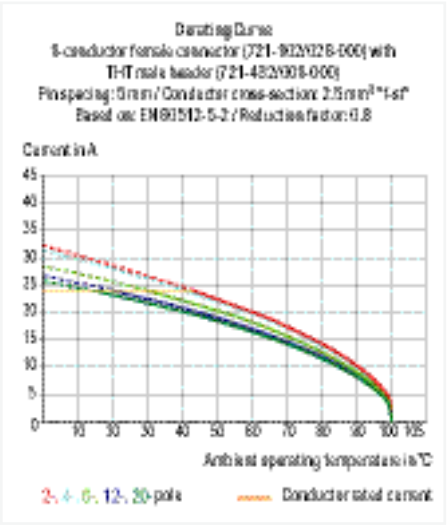

Electrical data			
Ratings per	**IEC/EN 60664-1**		
Overvoltage category	III	III	II
Pollution degree	3	2	2
Nominal voltage	320 V	320 V	630 V
Rated impulse withstand voltage	4 kV	4 kV	4 kV
Rated current	12 A	12 A	12 A
Approvals per	**UL 1059**		
Use group	B	C	D
Rated voltage	300 V	-	300 V
Rated current	10 A	-	10 A
Approvals per	**CSA**		
Use group	B	C	D
Rated voltage	300 V	-	300 V
Rated current	10 A	-	10 A

Material data	
Material group	I
Insulation material (main housing)	Polyamide (PA66)
Flammability class per UL94	V0
Contact material	Electrolytic copper (E_{Cu})
Contact Plating	Tin

Mechanical data	
Solder pin arrangement	over the entire male connector (in-line)
Number of solder pins per potential	1
Solder pin dimensions	1 x 1 mm
Drilled hole diameter	1.4 $^{(+0.1)}$ mm

Environmental requirements	
Limit temperature range	-60 … +100 °C
Processing temperature	-35 … +60 °C

Note:
The *MCS – MULTI CONNECTION SYSTEM* includes connectors without breaking capacity in accordance with DIN EN 61984. When used as intended, these connectors must not be connected/disconnected when live or under load.When used as intended, these connectors must not be connected/disconnected when live or under load. The circuit design should ensure header pins, which can be touched, are not live when unmated.

Coding Page 638

See technical section for further information

Approvals and corresponding ratings, visit www.wago.com

THT male header ▸ *MCS* MIDI ▸ 721 Series

Pin spacing: 5 mm / 0.197 inches ▸ Solder pin dimensions: 1 x 1 mm ▸ Color: light gray

Mating direction to the PCB: 0 ° ▸ Solder pin length: 3.8 mm



721-435/001-000

Pole number	Item No.	PU
2	721-432/001-000	200
3	721-433/001-000	200
4	721-434/001-000	200
5	721-435/001-000	200
6	721-436/001-000	100
7	721-437/001-000	100
8	721-438/001-000	100
9	721-439/001-000	100
10	721-440/001-000	100
11	721-441/001-000	100
12	721-442/001-000	100
13	721-443/001-000	50
14	721-444/001-000	50
15	721-445/001-000	50
16	721-446/001-000	50
20	721-450/001-000	50

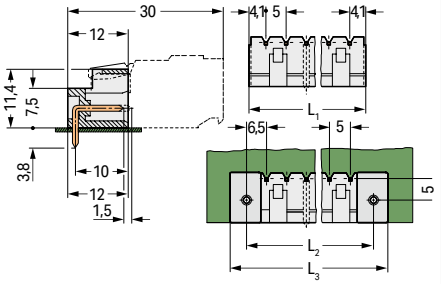

L_1 = (pole no. – 1) x pin spacing + 8.2 mm
$L_2 = L_1 + 5$ mm
$L_3 = L_2 + 7.4$ mm

Mating direction to the PCB: 90 ° ▸ Solder pin length: 5 mm

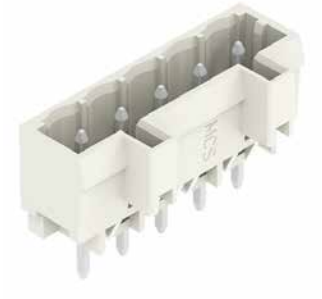

721-135/001-000

Pole number	Item No.	PU
2	721-132/001-000	200
3	721-133/001-000	200
4	721-134/001-000	200
5	721-135/001-000	200
6	721-136/001-000	100
7	721-137/001-000	100
8	721-138/001-000	100
9	721-139/001-000	100
10	721-140/001-000	100
11	721-141/001-000	100
12	721-142/001-000	100
13	721-143/001-000	50
14	721-144/001-000	50
15	721-145/001-000	50
16	721-146/001-000	50
20	721-150/001-000	50

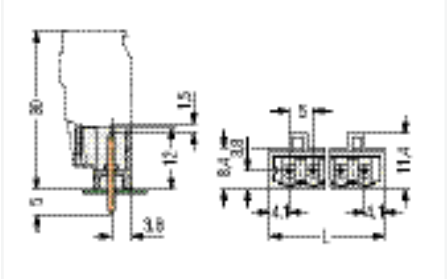

L = (pole no. – 1) x pin spacing + 8.2 mm

PU = packaging unit; SPU = subpackaging unit; Dimensions in mm

Variants:

- Other pole numbers
- 3.8 mm pin projection for male headers with straight solder pins
- Gold-plated or partially gold-plated contact surfaces
- Other versions (or variants) can be requested from WAGO Sales or configured at https://configurator.wago.com/.

THT male header ▸ *MCS* MIDI ▸ 721 Series

Pin spacing: 5 mm / 0.197 inches ▸ Solder pin dimensions: 1.2 x 1.2 mm ▸ Color: light gray

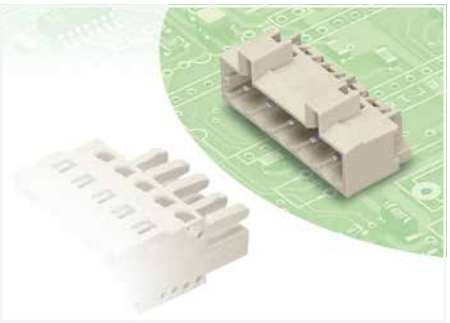

- Horizontal or vertical PCB mounting via straight or angled solder pins
- 1.2 x 1.2 mm solder pins allow nominal current up to 16 A, enhancing stability of shorter headers
- 100 % protected against mismating
- With coding fingers

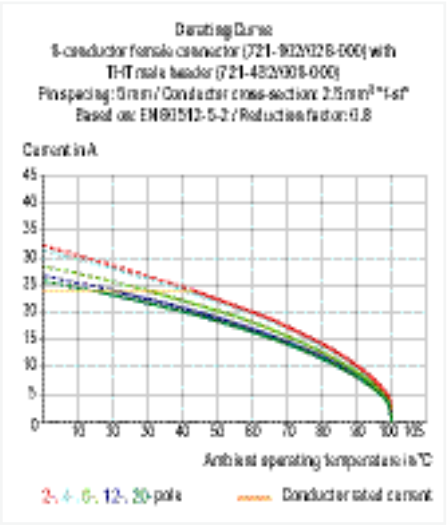

Electrical data			
Ratings per	**IEC/EN 60664-1**		
Overvoltage category	III	III	II
Pollution degree	3	2	2
Nominal voltage	250 V	320 V	630 V
Rated impulse withstand voltage	4 kV	4 kV	4 kV
Rated current	16 A	16 A	16 A
Approvals per	**UL 1059**		
Use group	B	C	D
Rated voltage	300 V	-	300 V
Rated current	15 A	-	10 A
Approvals per	**CSA**		
Use group	B	C	D
Rated voltage	300 V	-	300 V
Rated current	15 A	-	10 A

Material data	
Material group	I
Insulation material (main housing)	Polyamide (PA66)
Flammability class per UL94	V0
Contact material	Electrolytic copper (E_{Cu})
Contact Plating	Tin

Mechanical data	
Solder pin arrangement	over the entire male connector (in-line)
Number of solder pins per potential	1
Solder pin dimensions	1.2 x 1.2 mm
Drilled hole diameter	1.7 $^{(+0.1)}$ mm

Environmental requirements	
Limit temperature range	-60 … +100 °C
Processing temperature	-35 … +60 °C

Note:
The *MCS – MULTI CONNECTION SYSTEM* includes connectors without breaking capacity in accordance with DIN EN 61984. When used as intended, these connectors must not be connected/disconnected when live or under load.When used as intended, these connectors must not be connected/disconnected when live or under load. The circuit design should ensure header pins, which can be touched, are not live when unmated.

Coding Page 638

See technical section for further information

Approvals and corresponding ratings, visit www.wago.com

THT male header ▸ *MCS* MIDI ▸ 721 Series

Pin spacing: 5 mm / 0.197 inches ▸ Solder pin dimensions: 1.2 x 1.2 mm ▸ Color: light gray

Mating direction to the PCB: 0 ° ▸ Solder pin length: 3.8 mm

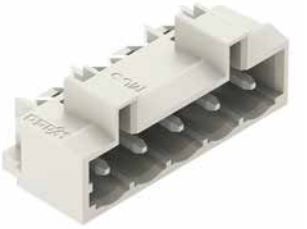

721-465/001-000

Pole number	Item No.	PU
2	721-462/001-000	200
3	721-463/001-000	200
4	721-464/001-000	200
5	721-465/001-000	100
6	721-466/001-000	100
7	721-467/001-000	100
8	721-468/001-000	100
9	721-469/001-000	100
10	721-470/001-000	100
11	721-471/001-000	100
12	721-472/001-000	100
13	721-473/001-000	50
14	721-474/001-000	50
15	721-475/001-000	50
16	721-476/001-000	50
20	721-480/001-000	50

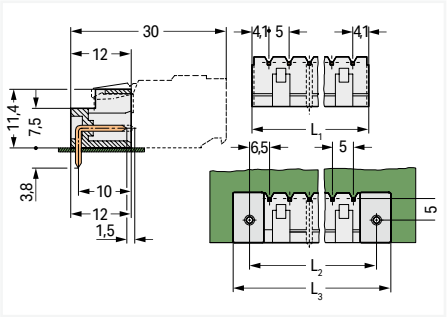

L_1 = (pole no. – 1) x pin spacing + 8.2 mm
$L_2 = L_1 + 5$ mm
$L_3 = L_2 + 7.4$ mm

Mating direction to the PCB: 90 ° ▸ Solder pin length: 5 mm



721-165/001-000

Pole number	Item No.	PU (SPU)
2	721-162/001-000	200
3	721-163/001-000	200
4	721-164/001-000	200
5	721-165/001-000	200
6	721-166/001-000	100
7	721-167/001-000	100
8	721-168/001-000	100
9	721-169/001-000	100 (1)
10	721-170/001-000	100
11	721-171/001-000	100
12	721-172/001-000	100
13	721-173/001-000	50
14	721-174/001-000	50
15	721-175/001-000	50
16	721-176/001-000	50
20	721-180/001-000	50

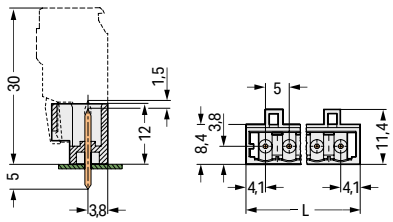

L = (pole no. – 1) x pin spacing + 8.2 mm

PU = packaging unit; SPU = subpackaging unit; Dimensions in mm

Variants:
- Other pole numbers
- 3.8 mm pin projection for male headers with straight solder pins
- Gold-plated or partially gold-plated contact surfaces
- Other versions (or variants) can be requested from WAGO Sales or configured at https://configurator.wago.com/.

THT male header ▸ *MCS* MIDI ▸ 721 Series

Pin spacing: 5 mm / 0.197 inches ▸ Preceding PE contact ▸ Solder pin dimensions: 1 x 1 mm ▸ Color: light gray

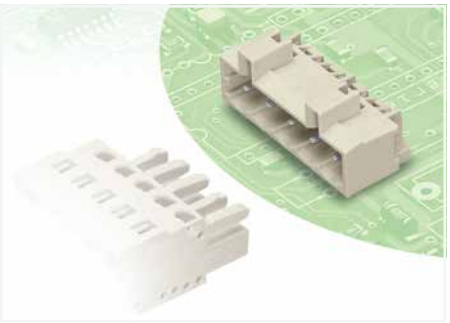

- Horizontal or vertical PCB mounting via straight or angled solder pins
- Pin cross-section: 1 x 1 mm
- 100 % protected against mismating
- With coding fingers

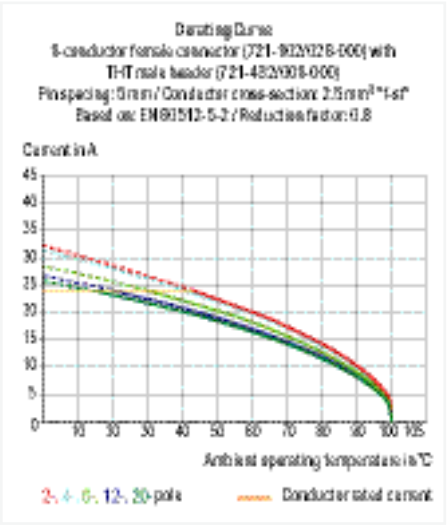

Electrical data			
Ratings per	**IEC/EN 60664-1**		
Overvoltage category	III	III	II
Pollution degree	3	2	2
Nominal voltage	320 V	320 V	630 V
Rated impulse withstand voltage	4 kV	4 kV	4 kV
Rated current	12 A	12 A	12 A
Approvals per	**UL 1059**		
Use group	B	C	D
Rated voltage	300 V	-	300 V
Rated current	10 A	-	10 A
Approvals per	**CSA**		
Use group	B	C	D
Rated voltage	300 V	-	300 V
Rated current	10 A	-	10 A

Material data	
Material group	I
Insulation material (main housing)	Polyamide (PA66)
Flammability class per UL94	V0
Contact material	Electrolytic copper (E_{Cu})
Contact Plating	Tin

Mechanical data	
Solder pin arrangement	over the entire male connector (in-line)
Number of solder pins per potential	1
Solder pin dimensions	1 x 1 mm
Drilled hole diameter	1.4 $^{(+0.1)}$ mm

Environmental requirements	
Limit temperature range	-60 … +100 °C
Processing temperature	-35 … +60 °C

Note:
The *MCS – MULTI CONNECTION SYSTEM* includes connectors without breaking capacity in accordance with DIN EN 61984. When used as intended, these connectors must not be connected/disconnected when live or under load.When used as intended, these connectors must not be connected/disconnected when live or under load. The circuit design should ensure header pins, which can be touched, are not live when unmated.

Coding Page 638

See technical section for further information

Approvals and corresponding ratings, visit www.wago.com

THT male header ▸ *MCS* MIDI ▸ 721 Series

Pin spacing: 5 mm / 0.197 inches ▸ Preceding PE contact ▸ Solder pin dimensions: 1 x 1 mm ▸ Color: light gray

Mating direction to the PCB: 0 ° ▸ Solder pin length: 3.8 mm



721-435/001-040

Pole number	Item No.	PU
3	**721-433/001-040**	200
4	**721-434/001-040**	200
5	**721-435/001-040**	200

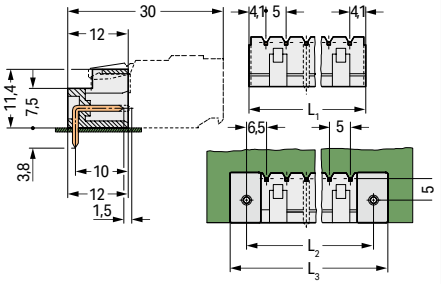

L_1 = (pole no. – 1) x pin spacing + 8.2 mm
L_2 = L_1 + 5 mm
L_3 = L_2 + 7.4 mm

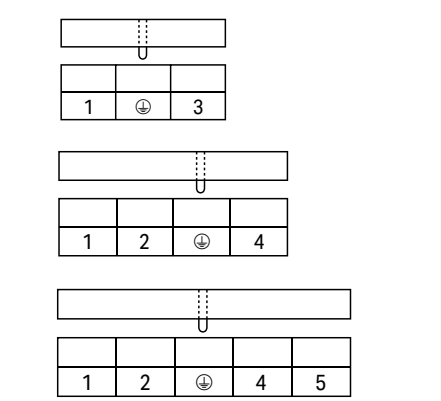

Preceding PE contact position

Mating direction to the PCB: 90 ° ▸ Solder pin length: 5 mm



721-135/001-040

Pole number	Item No.	PU
3	**721-133/001-040**	200
4	**721-134/001-040**	200
5	**721-135/001-040**	200

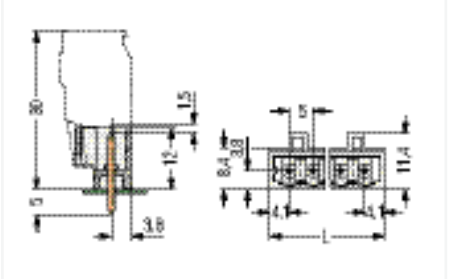

L = (pole no. – 1) x pin spacing + 8.2 mm

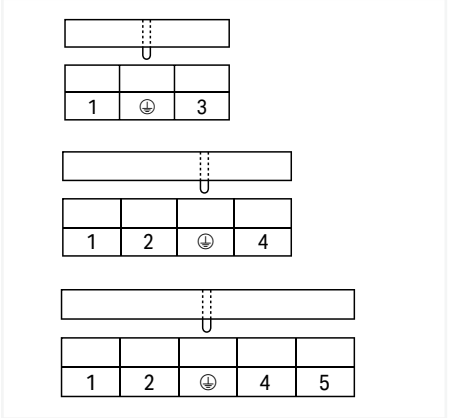

Preceding PE contact position

PU = packaging unit; SPU = subpackaging unit; Dimensions in mm

Variants:
- Other pole numbers
- 3.8 mm pin projection for male headers with straight solder pins
- Gold-plated or partially gold-plated contact surfaces
- Other versions (or variants) can be requested from WAGO Sales or configured at https://configurator.wago.com/.

THT male header ▸ *MCS* MIDI ▸ 721 Series

Pin spacing: 5 mm / 0.197 inches ▸ Preceding PE contact ▸ Solder pin dimensions: 1.2 x 1.2 mm ▸ Color: light gray

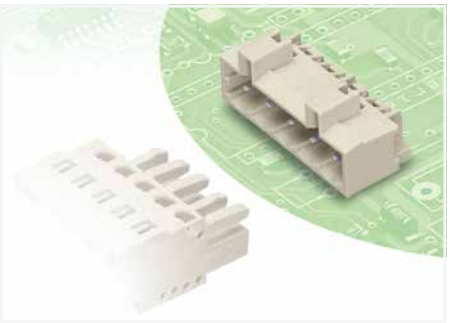

- Horizontal or vertical PCB mounting via straight or angled solder pins
- 1.2 x 1.2 mm solder pins allow nominal current up to 16 A, enhancing stability of shorter headers
- 100 % protected against mismating
- With coding fingers

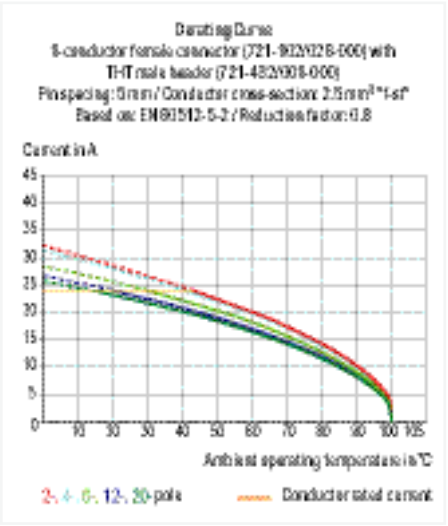

Electrical data			
Ratings per	**IEC/EN 60664-1**		
Overvoltage category	III	III	II
Pollution degree	3	2	2
Nominal voltage	250 V	320 V	630 V
Rated impulse withstand voltage	4 kV	4 kV	4 kV
Rated current	16 A	16 A	16 A
Approvals per	**UL 1059**		
Use group	B	C	D
Rated voltage	300 V	-	300 V
Rated current	15 A	-	10 A
Approvals per	**CSA**		
Use group	B	C	D
Rated voltage	300 V	-	300 V
Rated current	15 A	-	10 A

Material data	
Material group	I
Insulation material (main housing)	Polyamide (PA66)
Flammability class per UL94	V0
Contact material	Electrolytic copper (E_{Cu})
Contact Plating	Tin

Mechanical data	
Solder pin arrangement	over the entire male connector (in-line)
Number of solder pins per potential	1
Solder pin dimensions	1.2 x 1.2 mm
Drilled hole diameter	1.7 $^{(+0.1)}$ mm

Environmental requirements	
Limit temperature range	-60 … +100 °C
Processing temperature	-35 … +60 °C

Note:
The *MCS – MULTI CONNECTION SYSTEM* includes connectors without breaking capacity in accordance with DIN EN 61984. When used as intended, these connectors must not be connected/disconnected when live or under load.When used as intended, these connectors must not be connected/disconnected when live or under load. The circuit design should ensure header pins, which can be touched, are not live when unmated.

Coding Page 638

See technical section for further information

Approvals and corresponding ratings, visit www.wago.com

THT male header ▸ *MCS* MIDI ▸ 721 Series

Pin spacing: 5 mm / 0.197 inches ▸ Preceding PE contact ▸ Solder pin dimensions: 1.2 x 1.2 mm ▸ Color: light gray

Mating direction to the PCB: 0 ° ▸ Solder pin length: 3.8 mm



721-465/001-040

Pole number	Item No.	PU
3	**721-463/001-040**	200
4	**721-464/001-040**	200
5	**721-465/001-040**	200

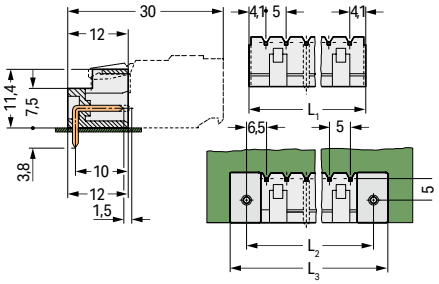

L_1 = (pole no. – 1) x pin spacing + 8.2 mm
$L_2 = L_1 + 5$ mm
$L_3 = L_2 + 7.4$ mm

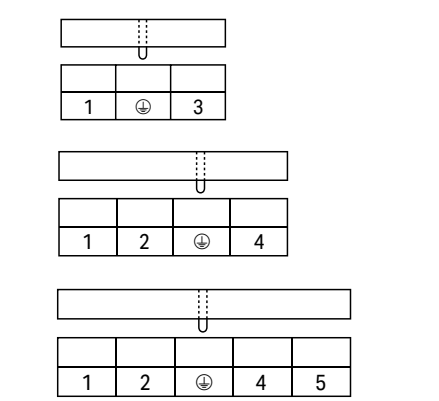

Preceding PE contact position

Mating direction to the PCB: 90 ° ▸ Solder pin length: 5 mm



721-165/001-040

Pole number	Item No.	PU
3	**721-163/001-040**	200
4	**721-164/001-040**	200
5	**721-165/001-040**	200

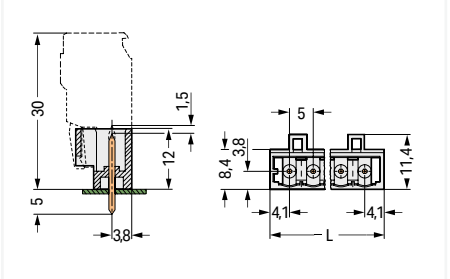

L = (pole no. – 1) x pin spacing + 8.2 mm

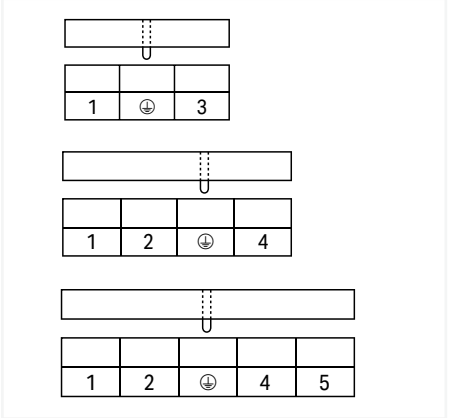

Preceding PE contact position

PU = packaging unit; SPU = subpackaging unit; Dimensions in mm

Variants:
- Other pole numbers
- 3.8 mm pin projection for male headers with straight solder pins
- Gold-plated or partially gold-plated contact surfaces
- Other versions (or variants) can be requested from WAGO Sales or configured at https://configurator.wago.com/.

1-conductor female connector ▸ *MCS* MIDI ▸ 721 Series

Pin spacing: 7.5 mm / 0.295 inches ▸ Actuation type: Operating tool ▸ CAGE CLAMP® ▸ Conductor entry direction to mating direction: 0 ° ▸ Color: light gray

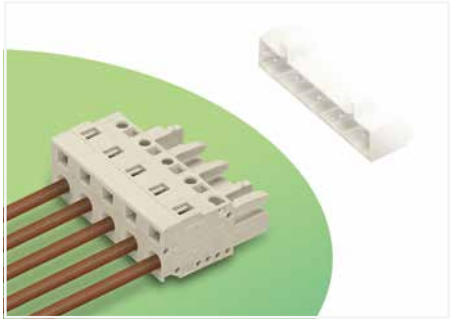

- Universal connection for all conductor types
- Easy cable pre-assembly and on-unit wiring via vertical and horizontal CAGE CLAMP® actuation
- Integrated test ports
- 100% protected against mismating
- Coding option available

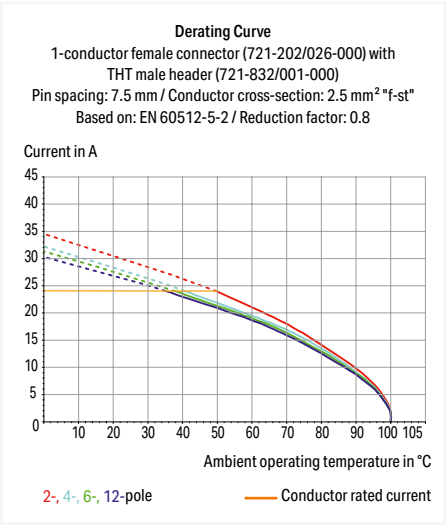

Electrical data			
Ratings per	**IEC/EN 60664-1**		
Overvoltage category	III	III	II
Pollution degree	3	2	2
Nominal voltage	500 V	630 V	1000 V
Rated impulse withstand voltage	6 kV	6 kV	6 kV
Rated current	16 A	16 A	16 A
Approvals per	**UL 1059**		
Use group	B	C	D
Rated voltage	300 V	-	300 V
Rated current	15 A	-	10 A
Approvals per	**CSA**		
Use group	B	C	D
Rated voltage	300 V	-	300 V
Rated current	15 A	-	10 A

Connection Data	
Connection technology	CAGE CLAMP®
Strip length	8 … 9 mm / 0.31 … 0.35 inches
Solid conductor	0.08 … 2.5 mm² / 28 … 12 AWG
Fine-stranded conductor	0.08 … 2.5 mm² / 28 … 12 AWG
Fine-stranded conductor; with insulated ferrule	0.25 … 1.5 mm²
Fine-stranded conductor; with uninsulated ferrule	0.25 … 2.5 mm²

Material data	
Material group	I
Insulation material (main housing)	Polyamide (PA66)
Flammability class per UL94	V0
Clamping spring material	Chrome-nickel spring steel (CrNi)
Contact material	Copper alloy
Contact Plating	Tin

Environmental requirements	
Limit temperature range	-60 … +100 °C
Processing temperature	-35 … +60 °C

Note:
The *MCS – MULTI CONNECTION SYSTEM* includes connectors without breaking capacity in accordance with DIN EN 61984. When used as intended, these connectors must not be connected/disconnected when live or under load.When used as intended, these connectors must not be connected/disconnected when live or under load. The circuit design should ensure header pins, which can be touched, are not live when unmated.

Cover	Page 639
Ferrule	Page 1081
Installation	Page 641
Insulation stop	Page 640
Marking	Page 1067
Mounting adapter	Page 642
Strain relief	Page 649
Test and measurement	Page 653, 1088
Tool	Page 636
Direct marking	Page 628
Cutout dimensions	Page 632
See technical section for further information	
Approvals and corresponding ratings, visit www.wago.com	

1-conductor female connector ▸ *MCS* MIDI ▸ 721 Series

Pin spacing: 7.5 mm / 0.295 inches ▸ Actuation type: Operating tool ▸ CAGE CLAMP® ▸ Conductor entry direction to mating direction: 0 ° ▸ Color: light gray

	Locking of plug-in connection: Locking lever	Mounting type: Snap-in flange
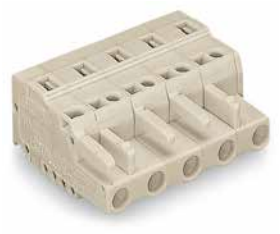		

721-205/026-000

Pole number	Item No.	PU
2	721-202/026-000	100
3	721-203/026-000	100
4	721-204/026-000	50
5	721-205/026-000	50
6	721-206/026-000	50
7	721-207/026-000	50
8	721-208/026-000	25
9	721-209/026-000	25
10	721-210/026-000	25
11	721-211/026-000	25
12	721-212/026-000	25

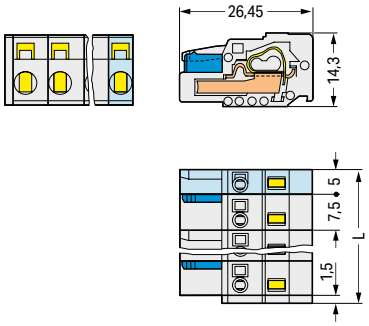

L = (pole no. – 1) x pin spacing + 5 mm + 1.5 mm

721-205/037-000

Pole number	Item No.	PU
2	721-202/037-000	50
3	721-203/037-000	50
4	721-204/037-000	50
5	721-205/037-000	50
6	721-206/037-000	25
7	721-207/037-000	25
8	721-208/037-000	25
9	721-209/037-000	25
10	721-210/037-000	25
12	721-212/037-000	10

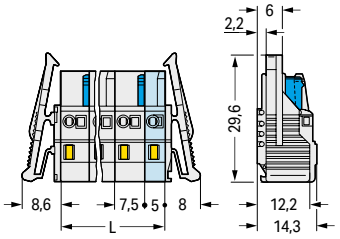

L = (pole no. – 1) x pin spacing + 5 mm

721-205/124-000

Pole number	Item No.	PU
2	721-202/124-000	50
3	721-203/124-000	50
4	721-204/124-000	50
5	721-205/124-000	50
6	721-206/125-000	25
7	721-207/125-000	25
8	721-208/125-000	25
9	721-209/125-000	25
10	721-210/125-000	25
11	721-211/125-000	10
12	721-212/125-000	10

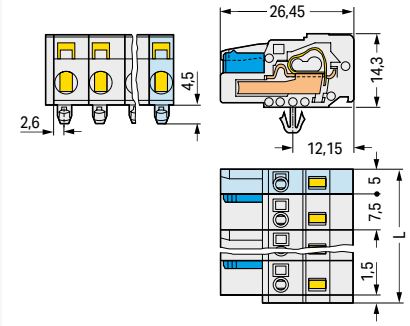

L = (pole no. – 1) x pin spacing + 5 mm + 1.5 mm

8

PU = packaging unit; SPU = subpackaging unit; Dimensions in mm

Variants:
- Other pole numbers
- Gold-plated or partially gold-plated contact surfaces
- Other versions (or variants) can be requested from WAGO Sales or configured at https://configurator.wago.com/.

1-conductor female connector ▸ *MCS* MIDI ▸ 721 Series

Pin spacing: 7.5 mm / 0.295 inches ▸ Actuation type: Operating tool ▸ CAGE CLAMP® ▸ Conductor entry direction to mating direction: 0 ° ▸ Color: light gray

Mounting type: Panel mounting ▸ Mounting type: Snap-in foot

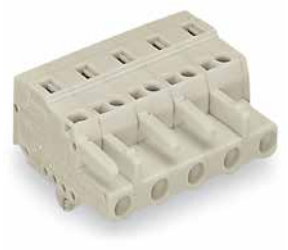

721-205/008-000

Pole number	Item No.	PU
2	721-202/008-000	100
3	721-203/008-000	100
4	721-204/008-000	50
5	721-205/008-000	50
6	721-206/008-000	50
7	721-207/008-000	50
8	721-208/008-000	25
9	721-209/008-000	25
10	721-210/008-000	25
11	721-211/008-000	10
12	721-212/008-000	25

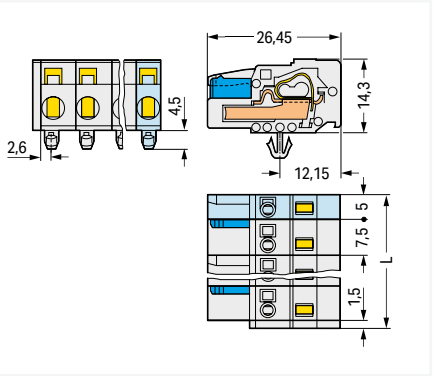

L = (pole no. – 1) x pin spacing + 5 mm + 1.5 mm

Mounting type: Feed-through mounting; Panel mounting ▸ Mounting type: Mounting flange



721-205/031-000

Pole number	Item No.	PU (SPU)
2	721-202/031-000	50
3	721-203/031-000	50
4	721-204/031-000	50
5	721-205/031-000	50
6	721-206/031-000	25
7	721-207/031-000	25
8	721-208/031-000	25
9	721-209/031-000	25 (1)
10	721-210/031-000	25
12	721-212/031-000	10

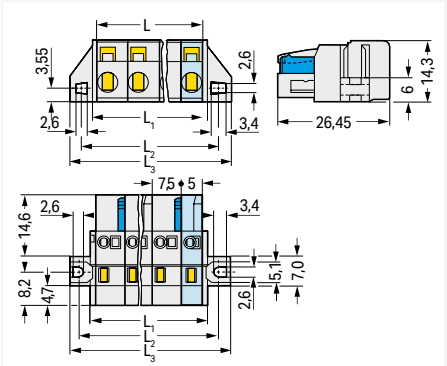

L = (pole no. – 1) x pin spacing + 5 mm
L_1 = L + 3 mm
L_2 = L + 8.8 mm
L_3 = L + 14.8 mm

Mounting type: Feed-through mounting; Panel mounting ▸ Mounting type: Mounting flange ▸ with reinforcing strips

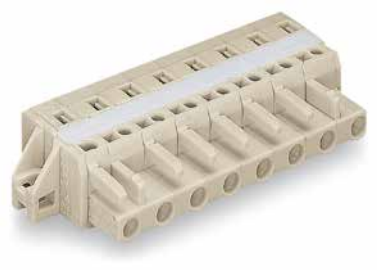

721-208/027-000

Pole number	Item No.	PU
6	721-206/027-000	25
8	721-208/027-000	25
9	721-209/027-000	25
12	721-212/027-000	10

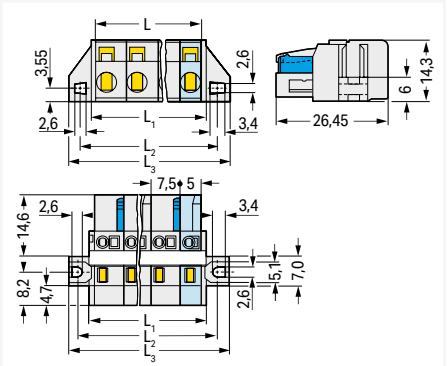

L = (pole no. – 1) x pin spacing + 5 mm
L_1 = L + 3 mm
L_2 = L + 8.8 mm
L_3 = L + 14.8 mm

8

PU = packaging unit; SPU = subpackaging unit; Dimensions in mm

Variants:
- Other pole numbers
- Gold-plated or partially gold-plated contact surfaces
- Other versions (or variants) can be requested from WAGO Sales or configured at https://configurator.wago.com/.

1-conductor female connector, angled ▸ *MCS* MIDI ▸ 721 Series

Pin spacing: 7.5 mm / 0.295 inches ▸ Actuation type: Operating tool ▸ CAGE CLAMP® ▸ Conductor entry direction to mating direction: 90 ° ▸ Color: light gray

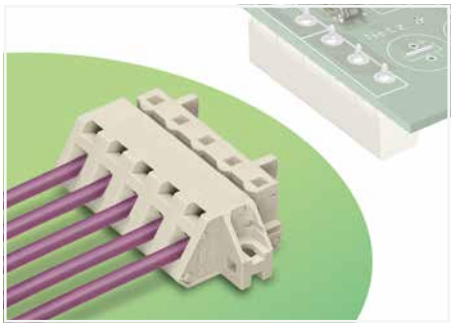

- Universal connection for all conductor types
- Available with snap-in mounting feet or flanges for panel or through-panel mounting
- Mounting adapter allows versions with snap-in mounting feet to be DIN-35 rail mounted
- Easy conductor termination, even when halves are mated
- 100% protected against mismating

Derating Curve
1-conductor female connector (721-332/031-000) with THT male header (721-232/001-000)
Pin spacing: 7.5 mm / Conductor cross-section: 2.5 mm² "f-st"
Based on: EN 60512-5-2 / Reduction factor: 0.8

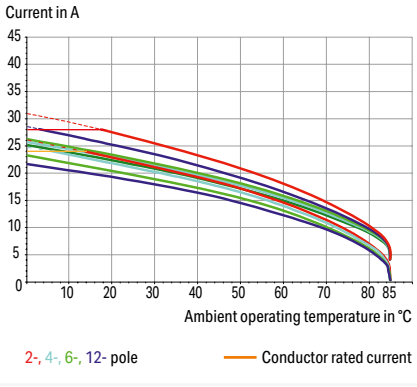

Electrical data			
Ratings per	**IEC/EN 60664-1**		
Overvoltage category	III	III	II
Pollution degree	3	2	2
Nominal voltage	500 V	630 V	1000 V
Rated impulse withstand voltage	6 kV	6 kV	6 kV
Rated current	12 A	12 A	12 A
Approvals per	**UL 1059**		
Use group	B	C	D
Rated voltage	300 V	-	300 V
Rated current	15 A	-	10 A
Approvals per	**CSA**		
Use group	B	C	D
Rated voltage	300 V	-	300 V
Rated current	15 A	-	10 A

Connection Data	
Connection technology	CAGE CLAMP®
Strip length	7 … 8 mm / 0.28 … 0.31 inches
Solid conductor	0.08 … 2.5 mm² / 28 … 12 AWG
Fine-stranded conductor	0.08 … 2.5 mm² / 28 … 12 AWG
Fine-stranded conductor; with insulated ferrule	0.25 … 1.5 mm²
Fine-stranded conductor; with uninsulated ferrule	0.25 … 2.5 mm²

Material data	
Material group	I
Insulation material (main housing)	Polyamide (PA66)
Flammability class per UL94	V0
Clamping spring material	Chrome-nickel spring steel (CrNi)
Contact material	Copper alloy
Contact Plating	Tin

Mechanical data	
Design	angled; mountable

Environmental requirements	
Limit temperature range	-60 … +85 °C
Processing temperature	-35 … +60 °C

Note:
The *MCS – MULTI CONNECTION SYSTEM* includes connectors without breaking capacity in accordance with DIN EN 61984. When used as intended, these connectors must not be connected/disconnected when live or under load.When used as intended, these connectors must not be connected/disconnected when live or under load. The circuit design should ensure header pins, which can be touched, are not live when unmated.

Ferrule	Page 1081
Installation	Page 642
Marking	Page 1067
Test and measurement	Page 653
Tool	Page 636
Cutout dimensions	Page 632
Direct marking	Page 628

See technical section for further information

Approvals and corresponding ratings, visit www.wago.com

1-conductor female connector, angled ▸ *MCS* MIDI ▸ 721 Series

Pin spacing: 7.5 mm / 0.295 inches ▸ Actuation type: Operating tool ▸ CAGE CLAMP® ▸ Conductor entry direction to mating direction: 90 ° ▸ Color: light gray

Mounting type: Panel mounting ▸ Mounting type: Mounting flange



721-335/031-000

Pole number	Item No.	PU
2	721-332/031-000	50
3	721-333/031-000	50
4	721-334/031-000	50
5	721-335/031-000	50
6	721-336/031-000	25
7	721-337/031-000	25
8	721-338/031-000	25
9	721-339/031-000	25
10	721-340/031-000	25
11	721-341/031-000	10
12	721-342/031-000	10

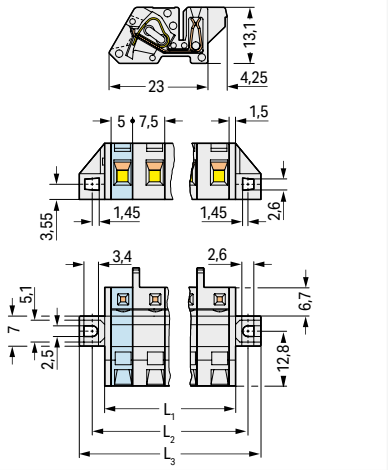

L_1 = (pole no. – 1) x pin spacing + 5 mm + 3 mm
L_2 = (pole no. – 1) x pin spacing + 5 mm + 8.8 mm
L_3 = (pole no. – 1) x pin spacing + 5 mm + 14.8 mm

Mounting type: Feed-through mounting; Panel mounting ▸ Mounting type: Snap-in foot



721-335/008-000

Pole number	Item No.	PU
2	721-332/008-000	100
3	721-333/008-000	100
4	721-334/008-000	50
5	721-335/008-000	50
6	721-336/008-000	50
7	721-337/008-000	50
8	721-338/008-000	25
9	721-339/008-000	25
10	721-340/008-000	25
11	721-341/008-000	25
12	721-342/008-000	25

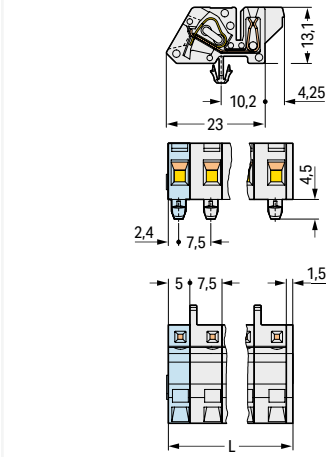

L = (pole no. – 1) x pin spacing + 5 mm + 1.5 mm

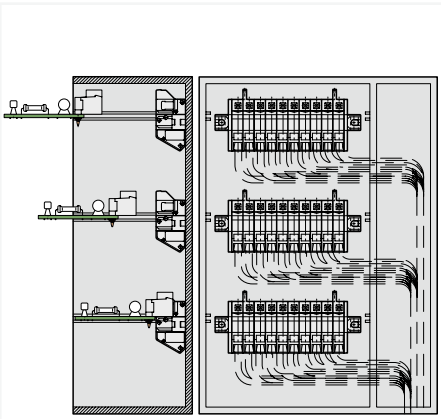

Multilevel arrangement in a distributed electronic housing



Angled female connector –
a male header with straight solder pins is used for horizontal PCB mounting in narrow housings.

8

PU = packaging unit; SPU = subpackaging unit; Dimensions in mm

Variants:
- Other pole numbers
- Gold-plated or partially gold-plated contact surfaces
- Other versions (or variants) can be requested from WAGO Sales or configured at https://configurator.wago.com/.

2-conductor female connector ▸ *MCS* MIDI ▸ 721 Series

Pin spacing: 7.5 mm / 0.295 inches ▸ Actuation type: Operating tool ▸ Push-in CAGE CLAMP® ▸ Conductor entry direction to mating direction: 0 ° ▸ Color: light gray

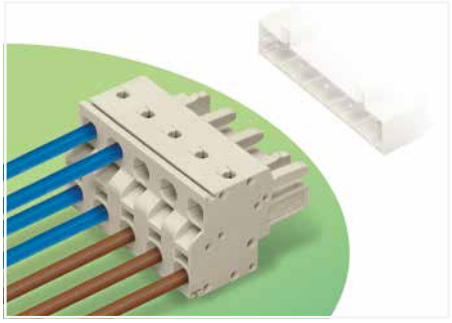

- Universal connection for all conductor types
- Two conductor entries per pole
- For looping through power or data buses
- Bus connection is retained, even when unmated
- Push-in terminations of solid and ferruled conductors
- 100% protected against mismating
- With coding fingers

Derating Curve
2-conductor female connector (721-2202/026-000) with THT male header (721-262/001-000)
Pin spacing: 7.5 mm / Conductor cross-section: 2.5 mm² "f-st"
Based on: EN 60512-5-2 / Reduction factor: 0.8

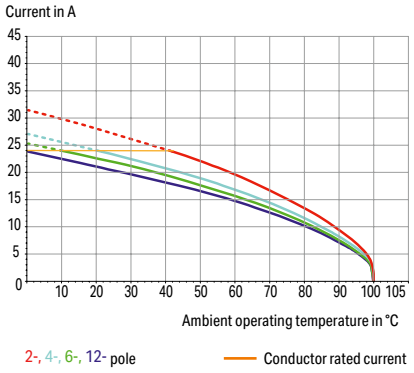

Electrical data			
Ratings per	**IEC/EN 60664-1**		
Overvoltage category	III	III	II
Pollution degree	3	2	2
Nominal voltage	500 V	630 V	1000 V
Rated impulse withstand voltage	6 kV	6 kV	6 kV
Rated current	16 A	16 A	16 A
Approvals per	**UL 1059**		
Use group	B	C	D
Rated voltage	300 V	-	300 V
Rated current	20 A	-	10 A
Approvals per	**CSA**		
Use group	B	C	D
Rated voltage	300 V	-	300 V
Rated current	15 A	-	10 A

Connection Data	
Connection technology	Push-in CAGE CLAMP®
Strip length	9 … 10 mm / 0.35 … 0.39 inches
Solid conductor	0.2 … 2.5 mm² / 24 … 12 AWG
Fine-stranded conductor	0.2 … 2.5 mm² / 24 … 12 AWG
Fine-stranded conductor; with insulated ferrule	0.25 … 1.5 mm²
Fine-stranded conductor; with uninsulated ferrule	0.25 … 2.5 mm²

Material data	
Material group	I
Insulation material (main housing)	Polyamide (PA66)
Flammability class per UL94	V0
Clamping spring material	Chrome-nickel spring steel (CrNi)
Contact material	Copper alloy
Contact Plating	Tin

Environmental requirements	
Limit temperature range	-60 … +100 °C
Processing temperature	-35 … +60 °C

Note:
The *MCS – MULTI CONNECTION SYSTEM* includes connectors without breaking capacity in accordance with DIN EN 61984. When used as intended, these connectors must not be connected/disconnected when live or under load.When used as intended, these connectors must not be connected/disconnected when live or under load. The circuit design should ensure header pins, which can be touched, are not live when unmated.

Ferrule	Page 1081
Insulation stop	Page 640
Marking	Page 1067
Strain relief	Page 647
Test and measurement	Page 653
Tool	Page 1072
Direct marking	Page 628

See technical section for further information

Approvals and corresponding ratings, visit www.wago.com

2-conductor female connector ▸ *MCS* MIDI ▸ 721 Series

Pin spacing: 7.5 mm / 0.295 inches ▸ Actuation type: Operating tool ▸ Push-in CAGE CLAMP® ▸ Conductor entry direction to mating direction: 0 ° ▸ Color: light gray

Plugging without loss of pin spacing

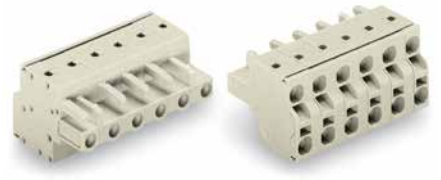

721-2206/026-000

Pole number	Item No.	PU
2	721-2202/026-000	100
3	721-2203/026-000	100
4	721-2204/026-000	50
5	721-2205/026-000	50
6	721-2206/026-000	50
7	721-2207/026-000	50
8	721-2208/026-000	25
9	721-2209/026-000	25
10	721-2210/026-000	25
11	721-2211/026-000	25
12	721-2212/026-000	25

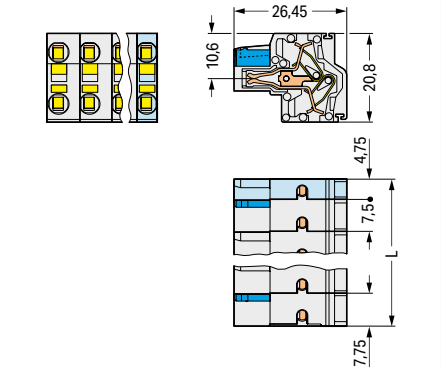

L = (pole no. – 2) x pin spacing + 12.5 mm
2-pole female connectors – one latch only

Locking of plug-in connection: Locking lever



721-2206/037-000

Pole number	Item No.	PU
2	721-2202/037-000	50
3	721-2203/037-000	50
4	721-2204/037-000	50
5	721-2205/037-000	50
6	721-2206/037-000	25
7	721-2207/037-000	25
8	721-2208/037-000	25
9	721-2209/037-000	25
10	721-2210/037-000	25
11	721-2211/037-000	10
12	721-2212/037-000	10

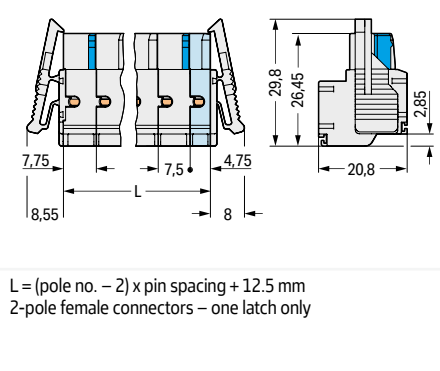

L = (pole no. – 2) x pin spacing + 12.5 mm
2-pole female connectors – one latch only

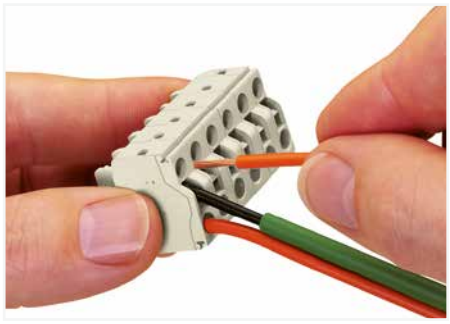

Operating Push-in CAGE CLAMP® is easy, fast and identical to that of CAGE CLAMP®. The screwdriver is fully inserted into the operating slot, holding Push-in CAGE CLAMP® open. After the conductor has been inserted into the clamping unit and the screwdriver been withdrawn, the conductor is clamped safely. Solid and fine-stranded conductors < 0.5 mm² (20 AWG) are terminated and removed using a screwdriver.

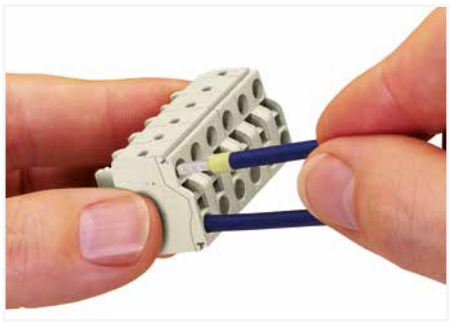

Solid conductors ≥ 0.5 mm² (20 AWG), as well as ferruled, fine-stranded conductors can be terminated by simply pushing them into unit. Integrated test ports allow touch contact with current bar via test probes in both horizontal and vertical directions.

8

PU = packaging unit; SPU = subpackaging unit; Dimensions in mm

Variants:
- Other pole numbers
- Gold-plated or partially gold-plated contact surfaces
- Other versions (or variants) can be requested from WAGO Sales or configured at https://configurator.wago.com/.

1-conductor female connector ▸ *MCS* MIDI ▸ 2721 Series

Pin spacing: 7.5 mm / 0.295 inches ▸ Actuation type: Push-button ▸ Push-in CAGE CLAMP® ▸ Conductor entry direction to mating direction: 0 ° ▸ Color: light gray

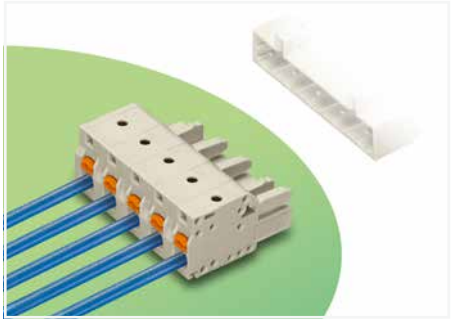

- Universal connection for all conductor types
- Easy-to-use design does not require specialty tools
- Ability to wire while mated
- Simple, push-in termination of solid and ferruled conductors
- Integrated test ports for testing parallel to the conductor entry
- 100% protected against mismating
- Coding option available

Derating Curve
1-conductor female connector (2721-202/026-000) with THT male header (721-262/001-000)
Pin spacing: 7.5 mm / Conductor cross-section: 2.5 mm² "f-st"
Based on: EN 60512-5-2 / Reduction factor: 0.8

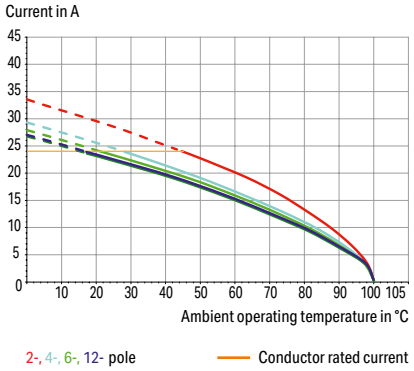

Electrical data			
Ratings per	**IEC/EN 60664-1**		
Overvoltage category	III	III	II
Pollution degree	3	2	2
Nominal voltage	500 V	630 V	1000 V
Rated impulse withstand voltage	6 kV	6 kV	6 kV
Rated current	16 A	16 A	16 A
Approvals per	**UL 1059**		
Use group	B	C	D
Rated voltage	300 V	150 V	300 V
Rated current	15 A	15 A	10 A
Approvals per	**CSA**		
Use group	B	C	D
Rated voltage		300 V	
Rated current	15 A	15 A	10 A

Connection Data	
Connection technology	Push-in CAGE CLAMP®
Strip length	10 … 11 mm / 0.39 … 0.43 inches
Solid conductor	0.2 … 2.5 mm² / 24 … 12 AWG
Fine-stranded conductor	0.2 … 2.5 mm² / 24 … 12 AWG
Fine-stranded conductor; with insulated ferrule	0.25 … 1.5 mm²
Fine-stranded conductor; with uninsulated ferrule	0.25 … 2.5 mm²

Material data	
Material group	I
Insulation material (main housing)	Polyamide (PA66)
Flammability class per UL94	V0
Clamping spring material	Chrome-nickel spring steel (CrNi)
Contact material	Copper alloy
Contact Plating	Tin

Environmental requirements	
Limit temperature range	-60 … +100 °C
Processing temperature	-35 … +60 °C

Note:
The *MCS – MULTI CONNECTION SYSTEM* includes connectors without breaking capacity in accordance with DIN EN 61984. When used as intended, these connectors must not be connected/disconnected when live or under load.When used as intended, these connectors must not be connected/disconnected when live or under load. The circuit design should ensure header pins, which can be touched, are not live when unmated.

Ferrule	Page 1081
Installation	Page 641
Insulation stop	Page 640
Marking	Page 1067
Mounting adapter	Page 642
Strain relief	Page 647
Test and measurement	Page 653, 1088
Tool	Page 1072
Direct marking	Page 628
Cutout dimensions	Page 632
See technical section for further information	
Approvals and corresponding ratings, visit www.wago.com	

1-conductor female connector ▸ *MCS* MIDI ▸ 2721 Series

Pin spacing: 7.5 mm / 0.295 inches ▸ Actuation type: Push-button ▸ Push-in CAGE CLAMP® ▸ Conductor entry direction to mating direction: 0 ° ▸ Color: light gray

	Locking of plug-in connection: Locking lever	Mounting type: Panel mounting ▸ Mounting type: Snap-in foot

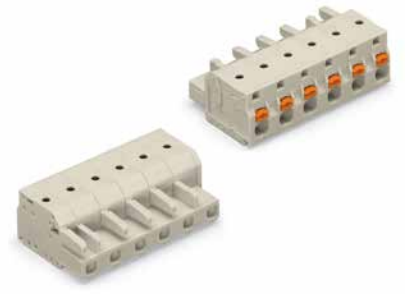

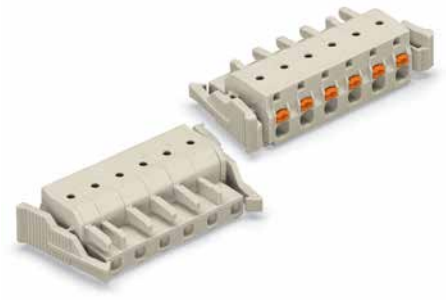

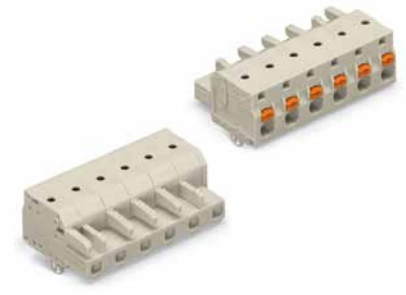

2721-206/026-000

Pole number	Item No.	PU
2	2721-202/026-000	100
3	2721-203/026-000	100
4	2721-204/026-000	50
5	2721-205/026-000	50
6	2721-206/026-000	50
7	2721-207/026-000	50
8	2721-208/026-000	25
9	2721-209/026-000	25
10	2721-210/026-000	25
11	2721-211/026-000	25
12	2721-212/026-000	25

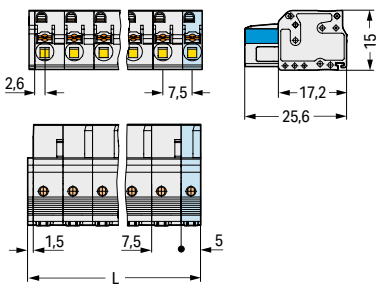

L = (pole no. – 1) x pin spacing + 5 mm + 1.5 mm
2-pole female connectors – one latch only

2721-206/037-000

Pole number	Item No.	PU
2	2721-202/037-000	50
3	2721-203/037-000	50
4	2721-204/037-000	50
5	2721-205/037-000	50
6	2721-206/037-000	25
7	2721-207/037-000	25
8	2721-208/037-000	25
9	2721-209/037-000	25
10	2721-210/037-000	25
11	2721-211/037-000	10
12	2721-212/037-000	10

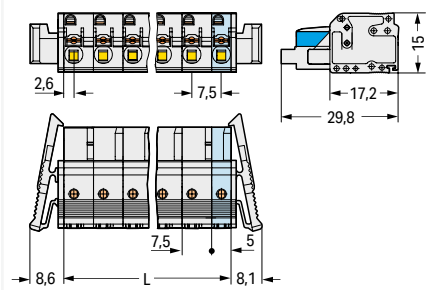

L = (pole no. – 1) x pin spacing + 5 mm
2-pole female connectors – one latch only

2721-206/008-000

Pole number	Item No.	PU
2	2721-202/008-000	100
3	2721-203/008-000	100
4	2721-204/008-000	50
5	2721-205/008-000	50
6	2721-206/008-000	50
7	2721-207/008-000	50
8	2721-208/008-000	25
9	2721-209/008-000	25
10	2721-210/008-000	25
11	2721-211/008-000	10
12	2721-212/008-000	25

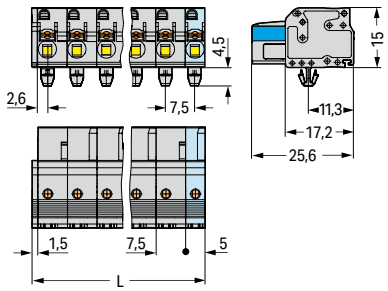

L = (pole no. – 1) x pin spacing + 5 mm + 1.5 mm
2-pole female connectors – one latch only

8

PU = packaging unit; SPU = subpackaging unit; Dimensions in mm

Variants:
- Other pole numbers
- Gold-plated or partially gold-plated contact surfaces
- Other versions (or variants) can be requested from WAGO Sales or configured at https://configurator.wago.com/.

1-conductor female connector ▸ *MCS* MIDI ▸ 2721 Series

Pin spacing: 7.5 mm / 0.295 inches ▸ Actuation type: Push-button ▸ Push-in CAGE CLAMP® ▸ Conductor entry direction to mating direction: 0 ° ▸ Color: light gray

Mounting type: Feed-through mounting; Panel mounting ▸ Mounting type: Mounting flange

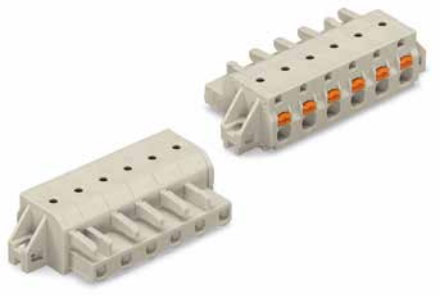

2721-206/031-000

Pole number	Item No.	PU
2	**2721-202/031-000**	50
3	**2721-203/031-000**	50
4	**2721-204/031-000**	50
5	**2721-205/031-000**	50
6	**2721-206/031-000**	25
7	**2721-207/031-000**	25
8	**2721-208/031-000**	25
9	**2721-209/031-000**	25
10	**2721-210/031-000**	25
11	**2721-211/031-000**	10
12	**2721-212/031-000**	10

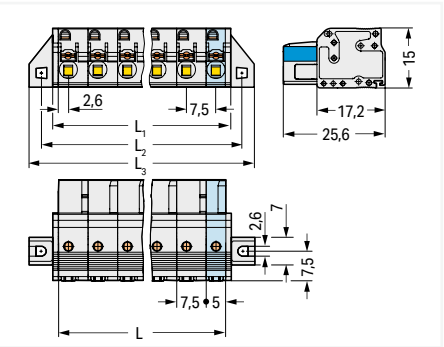

L = (pole no. – 1) x pin spacing + 5 mm
L_1 = L + 2.8 mm
L_2 = L + 8.8 mm
L_3 = L + 14.8 mm
2-pole female connectors – one latch only

PU = packaging unit; SPU = subpackaging unit; Dimensions in mm

Variants:
- Other pole numbers
- Gold-plated or partially gold-plated contact surfaces
- Other versions (or variants) can be requested from WAGO Sales or configured at https://configurator.wago.com/.

1-conductor female connector ▸ *MCS* MIDI ▸ 2722 Series

Pin spacing: 7.5 mm / 0.295 inches ▸ Actuation type: Lever ▸ Push-in CAGE CLAMP® ▸ Conductor entry direction to mating direction: 0 ° ▸ Color: light gray



- Intuitive, tool-free lever actuation
- Universal connection for all conductor types
- Push-in termination of solid conductors and fine-stranded conductors with ferrules
- Installation height: just 13.5 mm
- Test opening at 0° and 90° to conductor entry
- 100% protected against mismating
- Can be coded

Electrical data				
Ratings per	**IEC/EN 60664-1**			
Overvoltage category	III	III	II	
Pollution degree	3	2	2	
Nominal voltage	1000 V	1000 V	1000 V	
Rated impulse withstand voltage	8 kV	8 kV	8 kV	
Rated current	23 A	23 A	23 A	

Connection Data	
Connection technology	Push-in CAGE CLAMP®
Strip length	11 … 12 mm / 0.43 … 0.47 inches
Solid conductor	0.2 … 2.5 mm² / 24 … 12 AWG
Fine-stranded conductor	0.2 … 2.5 mm² / 24 … 12 AWG
Fine-stranded conductor; with insulated ferrule	0.25 … 2.5 mm²
Fine-stranded conductor; with uninsulated ferrule	0.25 … 2.5 mm²

Material data	
Material group	I
Insulation material (main housing)	Polyamide (PA66)
Flammability class per UL94	V0
Clamping spring material	Chrome-nickel spring steel (CrNi)
Contact material	Copper alloy
Contact Plating	Tin

Environmental requirements	
Limit temperature range	-60 … +100 °C
Processing temperature	-35 … +60 °C

Note:
The *MCS – MULTI CONNECTION SYSTEM* includes connectors without breaking capacity in accordance with DIN EN 61984. When used as intended, these connectors must not be connected/disconnected when live or under load.When used as intended, these connectors must not be connected/disconnected when live or under load. The circuit design should ensure header pins, which can be touched, are not live when unmated.

Coding Page 638

Locking system Page 643

See technical section for further information

Approvals and corresponding ratings, visit www.wago.com

1-conductor female connector ▸ *MCS* MIDI ▸ 2722 Series

Pin spacing: 7.5 mm / 0.295 inches ▸ Actuation type: Lever ▸ Push-in CAGE CLAMP® ▸ Conductor entry direction to mating direction: 0 ° ▸ Color: light gray



2722-1206/326-000

Pole number	Item No.	PU
2	**2722-1202/326-000**	100
3	**2722-1203/326-000**	50
4	**2722-1204/326-000**	50
5	**2722-1205/326-000**	50

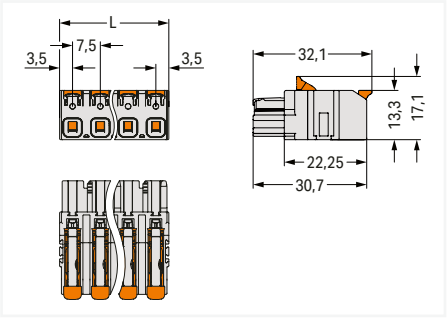

L = (pole no. x pin spacing) – 0.5

8

PU = packaging unit; SPU = subpackaging unit; Dimensions in mm

Variants:
- Other pole numbers
- Gold-plated or partially gold-plated contact surfaces
- Other versions (or variants) can be requested from WAGO Sales or configured at https://configurator.wago.com/.

1-conductor male connector ▸ *MCS* MIDI ▸ 723 Series

Pin spacing: 7.5 mm / 0.295 inches ▸ Actuation type: Operating tool ▸ CAGE CLAMP® ▸ Conductor entry direction to mating direction: 0 ° ▸ Color: light gray

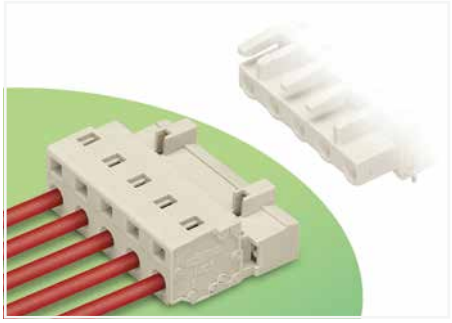

- Universal connection for all conductor types
- Easy cable pre-assembly and on-unit wiring via vertical and horizontal CAGE CLAMP® actuation
- For wire-to-wire and board-to-wire connections
- Versions available with snap-in mounting feet or flanges for panel or through-panel mounting
- 3- to 5-pole male connectors are also available with preceding ground contact
- 100 % protected against mismating
- With coding fingers

Derating Curve
1-conductor female connector (721-202/026-000) with 1-conductor male connector (723-602)
Pin spacing: 7.5 mm / Conductor cross-section: 2.5 mm² "f-st"
Based on: EN 60512-5-2 / Reduction factor: 0.8

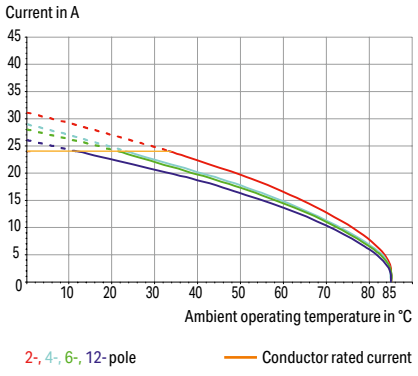

Electrical data			
Ratings per	**IEC/EN 60664-1**		
Overvoltage category	III	III	II
Pollution degree	3	2	2
Nominal voltage	500 V	630 V	1000 V
Rated impulse withstand voltage	6 kV	6 kV	6 kV
Rated current	12 A	12 A	12 A
Approvals per	**UL 1059**		
Use group	B	C	D
Rated voltage	300 V	-	300 V
Rated current	15 A	-	10 A
Approvals per	**CSA**		
Use group	B	C	D
Rated voltage	300 V	-	300 V
Rated current	15 A	-	10 A

Connection Data	
Connection technology	CAGE CLAMP®
Strip length	8 … 9 mm / 0.31 … 0.35 inches
Solid conductor	0.08 … 2.5 mm² / 28 … 12 AWG
Fine-stranded conductor	0.08 … 2.5 mm² / 28 … 12 AWG
Fine-stranded conductor; with insulated ferrule	0.25 … 1.5 mm²
Fine-stranded conductor; with uninsulated ferrule	0.25 … 2.5 mm²

Material data	
Material group	I
Insulation material (main housing)	Polyamide (PA66)
Flammability class per UL94	V0
Clamping spring material	Chrome-nickel spring steel (CrNi)
Contact material	Electrolytic copper (E_{Cu})
Contact Plating	Tin

Environmental requirements	
Limit temperature range	-60 … +100 °C
Processing temperature	-35 … +60 °C

Note:
The *MCS – MULTI CONNECTION SYSTEM* includes connectors without breaking capacity in accordance with DIN EN 61984. When used as intended, these connectors must not be connected/disconnected when live or under load.When used as intended, these connectors must not be connected/disconnected when live or under load. The circuit design should ensure header pins, which can be touched, are not live when unmated.

Coding	Page 638
Cover	Page 639
Ferrule	Page 1081
Installation	Page 641
Insulation stop	Page 640
Mounting adapter	Page 642
Strain relief	Page 649
Tool	Page 636
Direct marking	Page 628
Cutout dimensions	Page 632
See technical section for further information	
Approvals and corresponding ratings, visit www.wago.com	

1-conductor male connector ▸ *MCS* MIDI ▸ 723 Series

Pin spacing: 7.5 mm / 0.295 inches ▸ Actuation type: Operating tool ▸ CAGE CLAMP® ▸ Conductor entry direction to mating direction: 0 ° ▸ Color: light gray

	Mounting type: Panel mounting ▸ Mounting type: Snap-in foot	Mounting type: Feed-through mounting; Panel mounting ▸ Mounting type: Mounting flange

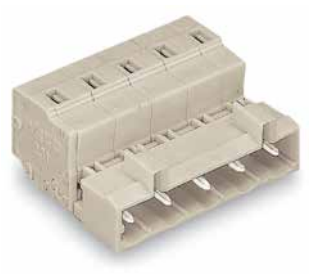

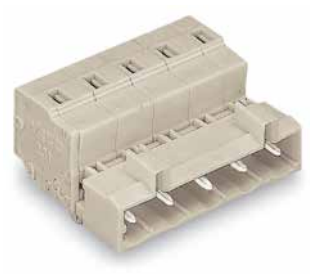

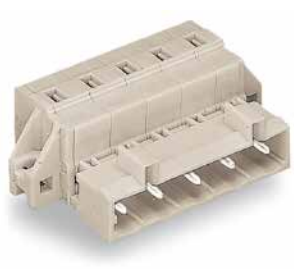

723-605

Pole number	Item No.	PU
2	723-602	100
3	723-603	100
4	723-604	50
5	723-605	50
6	723-606	50
7	723-607	50
8	723-608	25
9	723-609	25
10	723-610	25
11	723-611	25
12	723-612	25

723-605/018-000

Pole number	Item No.	PU
2	723-602/018-000	100
3	723-603/018-000	100
4	723-604/018-000	50
5	723-605/018-000	50
6	723-606/018-000	50
7	723-607/018-000	50
8	723-608/018-000	25
9	723-609/018-000	25
10	723-610/018-000	25
11	723-611/018-000	25
12	723-612/018-000	25

723-605/019-000

Pole number	Item No.	PU
2	723-602/019-000	50
3	723-603/019-000	50
4	723-604/019-000	50
5	723-605/019-000	50
6	723-606/019-000	25
7	723-607/019-000	25
8	723-608/019-000	25
9	723-609/019-000	25
10	723-610/019-000	25
11	723-611/019-000	10
12	723-612/019-000	10

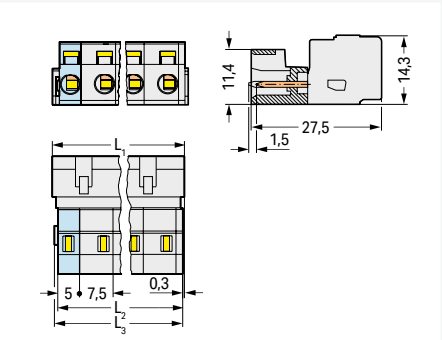

L_1 = (pole no. – 1) x pin spacing + 8.2 mm
$L_2 = L_1 - 1.7$ mm
$L_3 = L_1 - 1.2$ mm

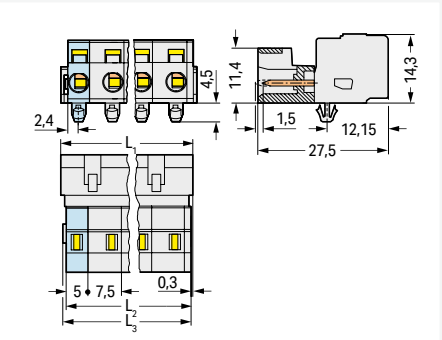

L_1 = (pole no. – 1) x pin spacing + 8.2 mm
$L_2 = L_1 - 1.7$ mm
$L_3 = L_1 - 1.2$ mm

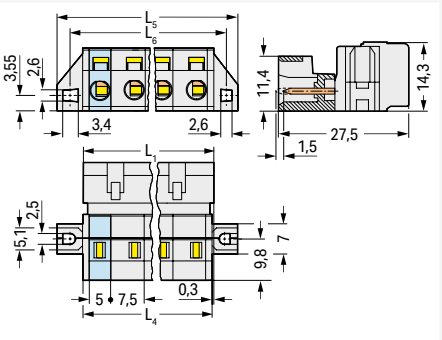

L_1 = (pole no. – 1) x pin spacing + 8.2 mm
$L_4 = L_1 - 0.2$ mm
$L_5 = L_4 + 5.8$ mm
$L_6 = L_4 + 11.8$ mm

PU = packaging unit; SPU = subpackaging unit; Dimensions in mm

Variants:
- Other pole numbers
- Gold-plated or partially gold-plated contact surfaces
- Other versions (or variants) can be requested from WAGO Sales or configured at https://configurator.wago.com/.

1-conductor male connector ▸ *MCS* MIDI ▸ 723 Series

Pin spacing: 7.5 mm / 0.295 inches ▸ Actuation type: Operating tool ▸ CAGE CLAMP® ▸ Conductor entry direction to mating direction: 0 ° ▸ Color: light gray

Mounting type: Feed-through mounting ▸ Mounting type: Snap-in flange

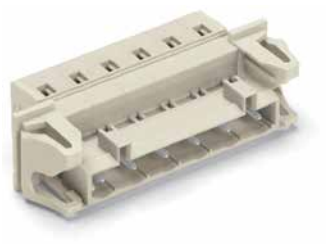

723-606/114-000

Pole number	Item No.	PU
2	**723-602/114-000**	50
3	**723-603/114-000**	50
4	**723-604/114-000**	50
5	**723-605/114-000**	25
6	**723-606/114-000**	25
7	**723-607/114-000**	25
8	**723-608/114-000**	25
9	**723-609/114-000**	25
10	**723-610/114-000**	10
11	**723-611/114-000**	10
12	**723-612/114-000**	10

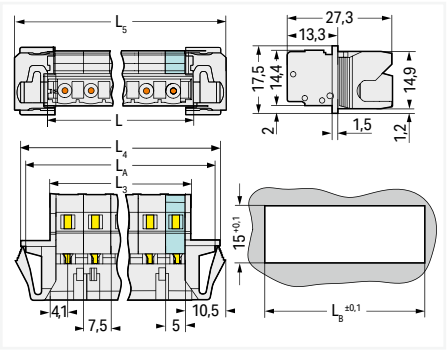

L = (pole no. – 1) x pin spacing + 8.2 mm
L_3 = L – 0.2 mm
L_4 = L_3 + 15.2 mm
L_5 = L_3 + 18 mm
L_A = L_3 + 12.6 mm
L_B = L_3 + 13.2 mm

PU = packaging unit; SPU = subpackaging unit; Dimensions in mm

Variants:
- Other pole numbers
- Gold-plated or partially gold-plated contact surfaces
- Other versions (or variants) can be requested from WAGO Sales or configured at https://configurator.wago.com/.

1-conductor male connector ▸ *MCS* MIDI ▸ 723 Series

Pin spacing: 7.5 mm / 0.295 inches ▸ Actuation type: Operating tool ▸ CAGE CLAMP® ▸ Preceding PE contact ▸ Conductor entry direction to mating direction: 0 ° ▸ Color: light gray

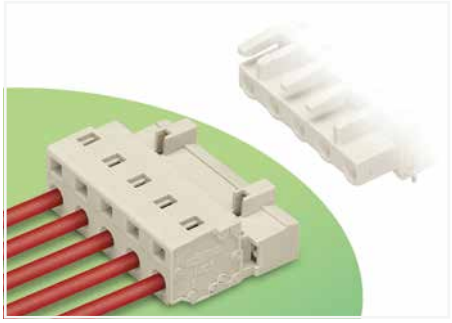

- Universal connection for all conductor types
- Easy cable pre-assembly and on-unit wiring via vertical and horizontal CAGE CLAMP® actuation
- For wire-to-wire and board-to-wire connections
- Versions available with snap-in mounting feet or flanges for panel or through-panel mounting
- 3- to 5-pole male connectors are also available with preceding ground contact
- 100 % protected against mismating
- With coding fingers

Derating Curve
1-conductor female connector (721-202/026-000) with 1-conductor male connector (723-602)
Pin spacing: 7.5 mm / Conductor cross-section: 2.5 mm² "f-st"
Based on: EN 60512-5-2 / Reduction factor: 0.8

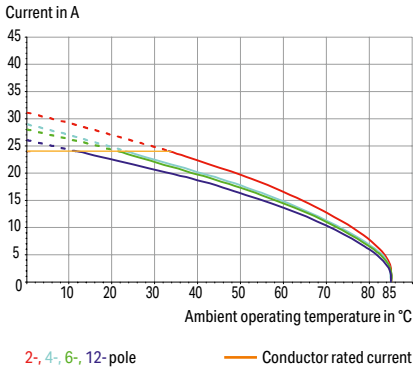

Electrical data			
Ratings per	**IEC/EN 60664-1**		
Overvoltage category	III	III	II
Pollution degree	3	2	2
Nominal voltage	500 V	630 V	1000 V
Rated impulse withstand voltage	6 kV	6 kV	6 kV
Rated current	12 A	12 A	12 A
Approvals per	**UL 1059**		
Use group	B	C	D
Rated voltage	300 V	-	300 V
Rated current	15 A	-	10 A
Approvals per	**CSA**		
Use group	B	C	D
Rated voltage	300 V	-	300 V
Rated current	15 A	-	10 A

Connection Data	
Connection technology	CAGE CLAMP®
Strip length	8 … 9 mm / 0.31 … 0.35 inches
Solid conductor	0.08 … 2.5 mm² / 28 … 12 AWG
Fine-stranded conductor	0.08 … 2.5 mm² / 28 … 12 AWG
Fine-stranded conductor; with insulated ferrule	0.25 … 1.5 mm²
Fine-stranded conductor; with uninsulated ferrule	0.25 … 2.5 mm²

Material data	
Material group	I
Insulation material (main housing)	Polyamide (PA66)
Flammability class per UL94	V0
Clamping spring material	Chrome-nickel spring steel (CrNi)
Contact material	Electrolytic copper (E_{Cu})
Contact Plating	Tin

Environmental requirements	
Limit temperature range	-60 … +100 °C
Processing temperature	-35 … +60 °C

Note:
The *MCS – MULTI CONNECTION SYSTEM* includes connectors without breaking capacity in accordance with DIN EN 61984. When used as intended, these connectors must not be connected/disconnected when live or under load.When used as intended, these connectors must not be connected/disconnected when live or under load. The circuit design should ensure header pins, which can be touched, are not live when unmated.

Coding	Page 638
Cover	Page 639
Ferrule	Page 1081
Installation	Page 641
Insulation stop	Page 640
Mounting adapter	Page 642
Strain relief	Page 649
Tool	Page 636
Direct marking	Page 628
Cutout dimensions	Page 632
See technical section for further information	
Approvals and corresponding ratings, visit www.wago.com	

1-conductor male connector ▸ *MCS* MIDI ▸ 723 Series

Pin spacing: 7.5 mm / 0.295 inches ▸ Actuation type: Operating tool ▸ CAGE CLAMP® ▸ Preceding PE contact ▸ Conductor entry direction to mating direction: 0 ° ▸ Color: light gray

	Mounting type: Panel mounting ▸ Mounting type: Snap-in foot	Mounting type: Feed-through mounting; Panel mounting ▸ Mounting type: Mounting flange

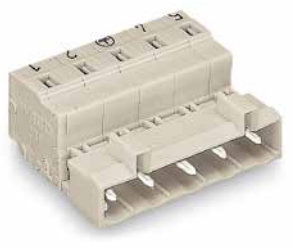

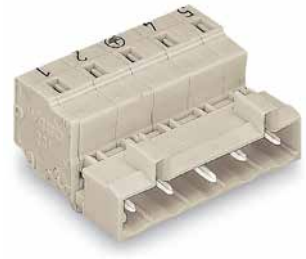

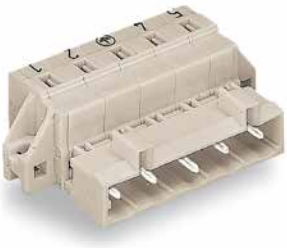

723-605/000-042

Pole number	Item No.	PU
3	723-603/000-042	100
4	723-604/000-042	50
5	723-605/000-042	50

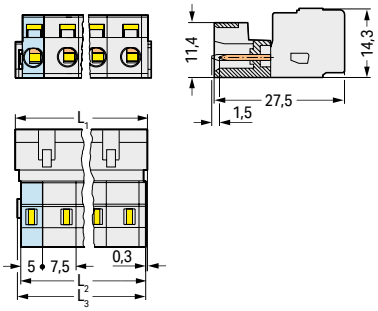

L_1 = (pole no. – 1) x pin spacing + 8.2 mm
$L_2 = L_1 - 1.7$ mm
$L_3 = L_1 - 1.2$ mm

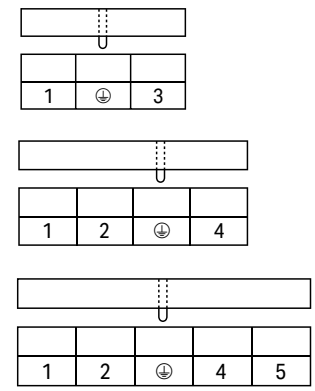

Preceding PE contact position

723-605/018-042

Pole number	Item No.	PU
3	723-603/018-042	100
4	723-604/018-042	50
5	723-605/018-042	50

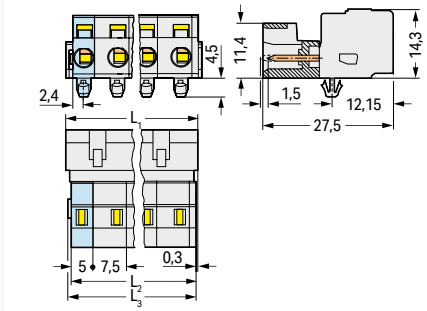

L_1 = (pole no. – 1) x pin spacing + 8.2 mm
$L_2 = L_1 - 1.7$ mm
$L_3 = L_1 - 1.2$ mm

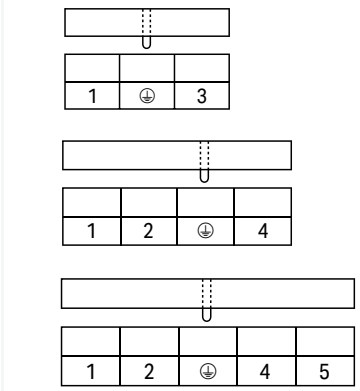

Preceding PE contact position

723-605/019-042

Pole number	Item No.	PU
3	723-603/019-042	50
4	723-604/019-042	50
5	723-605/019-042	50

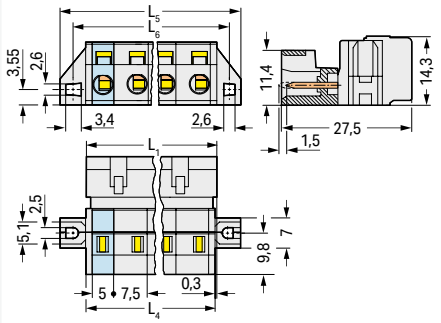

L_1 = (pole no. – 1) x pin spacing + 8.2 mm
$L_4 = L_1 - 0.2$ mm
$L_5 = L_4 + 5.8$ mm
$L_6 = L_4 + 11.8$ mm

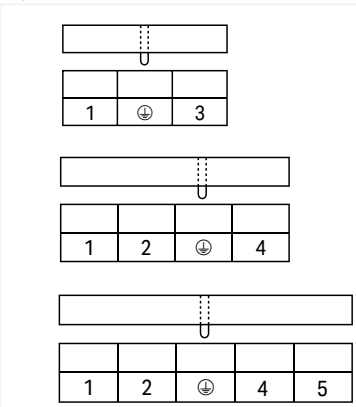

Preceding PE contact position

PU = packaging unit; SPU = subpackaging unit; Dimensions in mm

Variants:
- Other pole numbers
- Gold-plated or partially gold-plated contact surfaces
- Other versions (or variants) can be requested from WAGO Sales or configured at https://configurator.wago.com/.

1-conductor male connector ▸ *MCS* MIDI ▸ 723 Series

Pin spacing: 7.5 mm / 0.295 inches ▸ Actuation type: Operating tool ▸ CAGE CLAMP® ▸ Preceding PE contact ▸ Conductor entry direction to mating direction: 0 ° ▸ Color: light gray

Mounting type: Feed-through mounting ▸ Mounting type: Snap-in flange

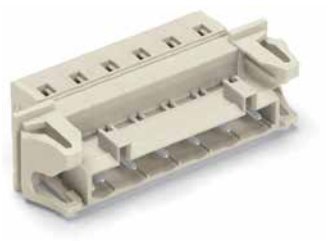

723-606/114-000

Pole number	Item No.	PU
3	**723-603/114-042**	50
4	**723-604/114-042**	50
5	**723-605/114-042**	25

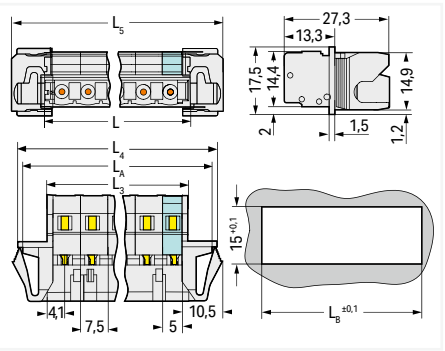

L = (pole no. – 1) x pin spacing + 8.2 mm
L_3 = L – 0.2 mm
L_4 = L_3 + 15.2 mm
L_5 = L_3 + 18 mm
L_A = L_3 + 12.6 mm
L_B = L_3 + 13.2 mm

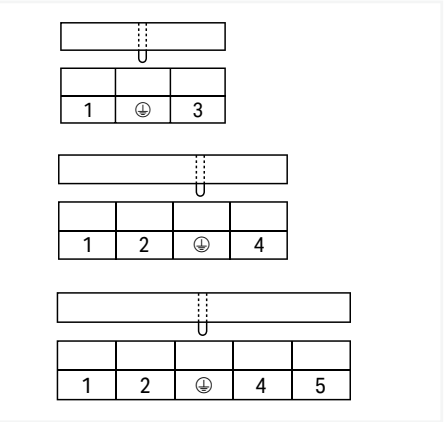

Preceding PE contact position

PU = packaging unit; SPU = subpackaging unit; Dimensions in mm

Variants:
- Other pole numbers
- Gold-plated or partially gold-plated contact surfaces
- Other versions (or variants) can be requested from WAGO Sales or configured at https://configurator.wago.com/.

THT female header ▸ *MCS* MIDI ▸ 722 Series

Pin spacing: 7.5 mm / 0.295 inches ▸ Solder pin dimensions: 0.6 x 1 mm ▸ Color: light gray

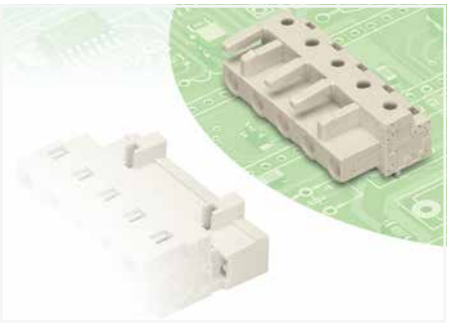

- Horizontal or vertical PCB mounting via straight or angled solder pins
- For board-to-board and board-to-wire connections
- Touch-proof PCB outputs
- Easy-to-identify PCB inputs and outputs
- 100 % protected against mismating
- With coding fingers

Derating Curve
THT female header (722-832) with
1-conductor male connector (723-602)
Pin spacing: 7.5 mm / Conductor cross-section: 2.5 mm² "f-st"
Based on: EN 60512-5-2 / Reduction factor: 0.8

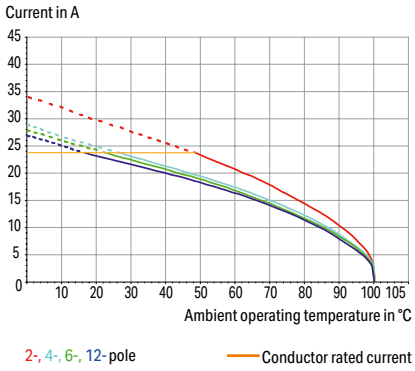

Electrical data			
Ratings per	**IEC/EN 60664-1**		
Overvoltage category	III	III	II
Pollution degree	3	2	2
Nominal voltage	500 V	630 V	1000 V
Rated impulse withstand voltage	6 kV	6 kV	6 kV
Rated current	12 A	12 A	12 A
Approvals per	**UL 1059**		
Use group	B	C	D
Rated voltage	300 V	-	300 V
Rated current	15 A	-	10 A
Approvals per	**CSA**		
Use group	B	C	D
Rated voltage	300 V	-	300 V
Rated current	15 A	-	10 A

Material data	
Material group	I
Insulation material (main housing)	Polyamide (PA66)
Flammability class per UL94	V0
Contact material	Copper alloy
Contact Plating	Tin

Mechanical data	
Solder pin arrangement	over the entire female connector (in-line)
Number of solder pins per potential	1
Solder pin length	5 mm
Solder pin dimensions	0.6 x 1 mm
Drilled hole diameter	1.3 $^{(+0.1)}$ mm

Environmental requirements	
Limit temperature range	-60 … +100 °C
Processing temperature	-35 … +60 °C

Note:
The *MCS – MULTI CONNECTION SYSTEM* includes connectors without breaking capacity in accordance with DIN EN 61984. When used as intended, these connectors must not be connected/disconnected when live or under load.When used as intended, these connectors must not be connected/disconnected when live or under load. The circuit design should ensure header pins, which can be touched, are not live when unmated.

Installation	Page 641, 1071
Test and measurement	Page 653, 1088
Cutout dimensions	Page 632
See technical section for further information	
Approvals and corresponding ratings, visit www.wago.com	

THT female header ▸ *MCS* MIDI ▸ 722 Series

Pin spacing: 7.5 mm / 0.295 inches ▸ Solder pin dimensions: 0.6 x 1 mm ▸ Color: light gray

Mating direction to the PCB: 0 °



722-835

Pole number	Item No.	PU
2	722-832	100
3	722-833	100
4	722-834	50
5	722-835	50
6	722-836	50
7	722-837	50
8	722-838	25
9	722-839	25
10	722-840	25
12	722-842	25

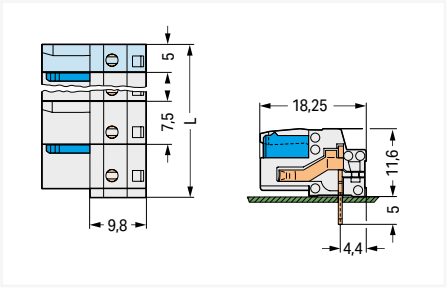

L = (pole no. – 1) x pin spacing + 5 mm + 1.5 mm
2-pole female connectors – one latch only

Mating direction to the PCB: 90 °

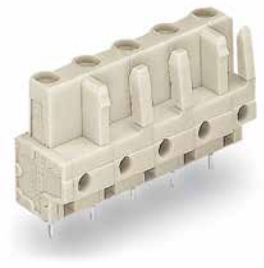

722-735

Pole number	Item No.	PU
2	722-732	100
3	722-733	100
4	722-734	50
5	722-735	50
6	722-736	50
7	722-737	50
8	722-738	25
9	722-739	25
10	722-740	25
11	722-741	25
12	722-742	25

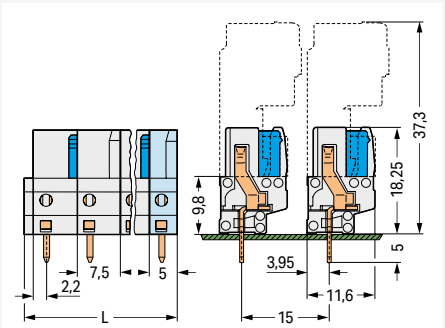

L = (pole no. – 1) x pin spacing + 5 mm + 1.5 mm
2-pole female connectors – one latch only

Locking of plug-in connection: Locking lever ▸ Mating direction to the PCB: 0 °



722-835/039-000

Pole number	Item No.	PU
2	722-832/039-000	50
3	722-833/039-000	50
4	722-834/039-000	50
5	722-835/039-000	50
6	722-836/039-000	25
7	722-837/039-000	25
8	722-838/039-000	25
9	722-839/039-000	25
10	722-840/039-000	25
11	722-841/039-000	10
12	722-842/039-000	10

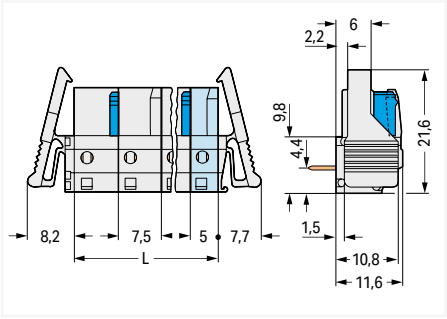

L = (pole no. – 1) x pin spacing + 5 mm
2-pole female connectors – one latch only

8

PU = packaging unit; SPU = subpackaging unit; Dimensions in mm

Variants:
- Other pole numbers
- 3.8 mm pin projection for male headers with straight solder pins
- Other versions (or variants) can be requested from WAGO Sales or configured at https://configurator.wago.com/.

THT female header ▸ *MCS* MIDI ▸ 722 Series

Pin spacing: 7.5 mm / 0.295 inches ▸ Solder pin dimensions: 0.6 x 1 mm ▸ Color: light gray

Locking of plug-in connection: Locking lever ▸ Mating direction to the PCB: 90 °

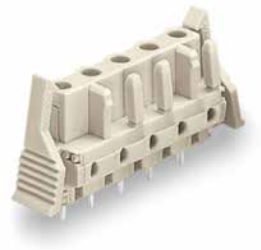

722-735/039-000

Pole number	Item No.	PU
2	722-732/039-000	50
3	722-733/039-000	50
4	722-734/039-000	50
5	722-735/039-000	50
6	722-736/039-000	25
7	722-737/039-000	25
8	722-738/039-000	25
9	722-739/039-000	25
10	722-740/039-000	25
11	722-741/039-000	10
12	722-742/039-000	10

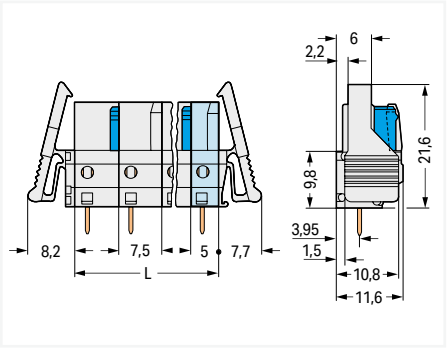

L = (pole no. - 1) x pin spacing + 5 mm
2-pole female connectors – one latch only

Mounting type: Feed-through mounting; Panel mounting ▸ Mounting type: Mounting flange ▸ Mating direction to the PCB: 0 °



722-835/031-000

Pole number	Item No.	PU
2	722-832/031-000	50
3	722-833/031-000	50
4	722-834/031-000	50
5	722-835/031-000	50
6	722-836/031-000	25
7	722-837/031-000	25
8	722-838/031-000	25
9	722-839/031-000	25
10	722-840/031-000	25
11	722-841/031-000	10
12	722-842/031-000	10

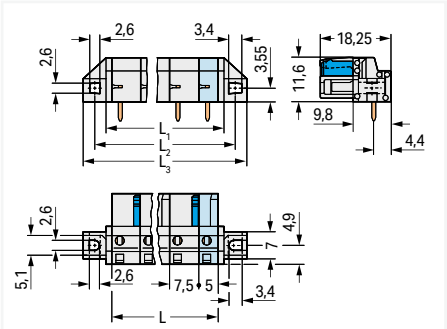

L = (pole no. – 1) x pin spacing + 5 mm
L_1 = L + 3 mm
L_2 = L + 8.8 mm
L_3 = L + 14.8 mm
2-pole female connectors – one latch only

Mounting type: Feed-through mounting; Panel mounting ▸ Mounting type: Mounting flange ▸ Mating direction to the PCB: 90 °



722-735/031-000

Pole number	Item No.	PU
2	722-732/031-000	50
3	722-733/031-000	50
4	722-734/031-000	50
5	722-735/031-000	50
6	722-736/031-000	25
7	722-737/031-000	25
8	722-738/031-000	25
9	722-739/031-000	25
10	722-740/031-000	25
11	722-741/031-000	10
12	722-742/031-000	10

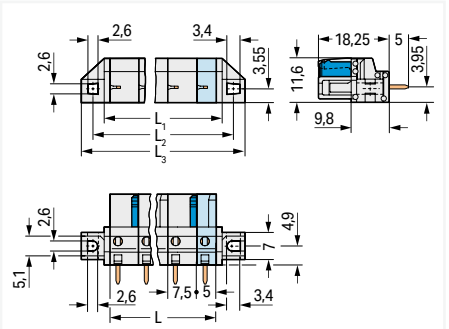

L = (pole no. – 1) x pin spacing + 5 mm
L_1 = L + 3 mm
L_2 = L + 8.8 mm
L_3 = L + 14.8 mm
2-pole female connectors – one latch only

PU = packaging unit; SPU = subpackaging unit; Dimensions in mm

Variants:
- Other pole numbers
- 3.8 mm pin projection for male headers with straight solder pins
- Other versions (or variants) can be requested from WAGO Sales or configured at https://configurator.wago.com/.

THT female header ▸ *MCS* MIDI ▸ 722 Series

Pin spacing: 7.5 mm / 0.295 inches ▸ Solder pin dimensions: 0.6 x 1 mm ▸ Color: light gray

Mounting type: Flush feed-through mounting; Panel mounting ▸ Mounting type: Mounting flange ▸ Mating direction to the PCB: 0 °

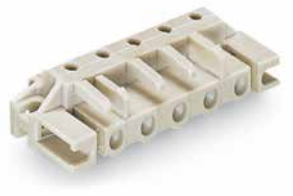

722-835/047-000

Pole number	Item No.	PU
2	**722-832/047-000**	50
3	**722-833/047-000**	50
4	**722-834/047-000**	50
5	**722-835/047-000**	50
6	**722-836/047-000**	25
7	**722-837/047-000**	25
8	**722-838/047-000**	25
9	**722-839/047-000**	25
10	**722-840/047-000**	25
11	**722-841/047-000**	10
12	**722-842/047-000**	10

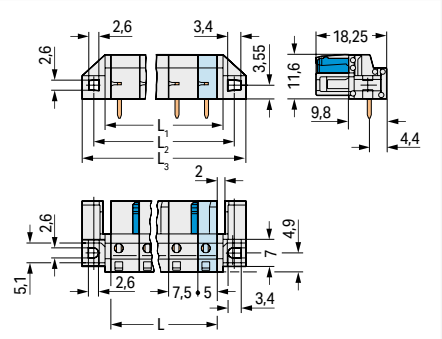

L = (pole no. – 1) x pin spacing + 5 mm
L_1 = L + 3 mm
L_2 = L + 8.8 mm
L_3 = L + 14.8 mm
2-pole female connectors – one latch only

Mounting type: Flush feed-through mounting; Panel mounting ▸ Mounting type: Mounting flange ▸ Mating direction to the PCB: 90 °

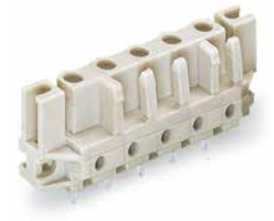

722-735/047-000

Pole number	Item No.	PU
2	**722-732/047-000**	50
3	**722-733/047-000**	50
4	**722-734/047-000**	50
5	**722-735/047-000**	50
6	**722-736/047-000**	25
7	**722-737/047-000**	25
8	**722-738/047-000**	25
9	**722-739/047-000**	25
10	**722-740/047-000**	25
11	**722-741/047-000**	10
12	**722-742/047-000**	10

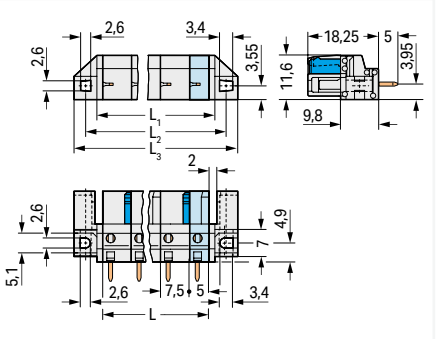

L = (pole no. – 1) x pin spacing + 5 mm
L_1 = L + 3 mm
L_2 = L + 8.8 mm
L_3 = L + 14.8 mm
2-pole female connectors – one latch only

PU = packaging unit; SPU = subpackaging unit; Dimensions in mm

Variants:
- Other pole numbers
- 3.8 mm pin projection for male headers with straight solder pins
- Other versions (or variants) can be requested from WAGO Sales or configured at https://configurator.wago.com/.

THT male header ▸ *MCS* MIDI ▸ 721 Series

Pin spacing: 7.5 mm / 0.295 inches ▸ Solder pin dimensions: 1 x 1 mm ▸ Color: light gray

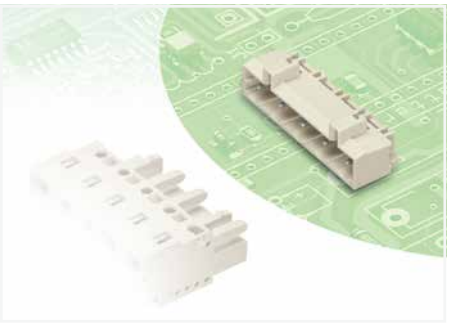

- Horizontal or vertical PCB mounting via straight or angled solder pins
- Pin cross-section: 1 x 1 mm
- 100 % protected against mismating
- With coding fingers

Derating Curve
1-conductor female connector (721-102/026-000) with
THT male header (721-862/001-000)
Pin spacing: 7.5 mm / Conductor cross-section: 2.5 mm² "f-st"
Based on: EN 60512-5-2 / Reduction factor: 0.8

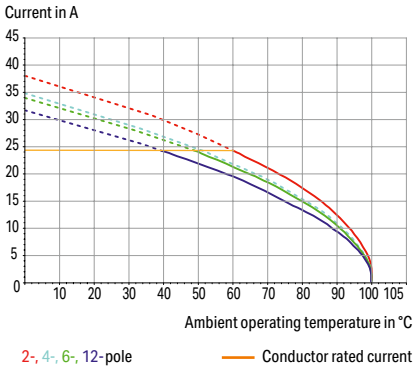

Electrical data			
Ratings per	**IEC/EN 60664-1**		
Overvoltage category	III	III	II
Pollution degree	3	2	2
Nominal voltage	500 V	630 V	1000 V
Rated impulse withstand voltage	6 kV	6 kV	6 kV
Rated current	12 A	12 A	12 A
Approvals per	**UL 1059**		
Use group	B	C	D
Rated voltage	300 V	-	300 V
Rated current	15 A	-	10 A
Approvals per	**CSA**		
Use group	B	C	D
Rated voltage	300 V	-	300 V
Rated current	15 A	-	10 A

Material data	
Material group	I
Insulation material (main housing)	Polyamide (PA66)
Flammability class per UL94	V0
Contact material	Electrolytic copper (E_{Cu})
Contact Plating	Tin

Mechanical data	
Solder pin arrangement	over the entire male connector (in-line)
Number of solder pins per potential	1
Solder pin dimensions	1 x 1 mm
Drilled hole diameter	1.4 $^{(+0.1)}$ mm

Environmental requirements	
Limit temperature range	-60 … +100 °C
Processing temperature	-35 … +60 °C

Note:
The *MCS – MULTI CONNECTION SYSTEM* includes connectors without breaking capacity in accordance with DIN EN 61984. When used as intended, these connectors must not be connected/disconnected when live or under load.When used as intended, these connectors must not be connected/disconnected when live or under load. The circuit design should ensure header pins, which can be touched, are not live when unmated.

Coding Page 638

See technical section for further information

Approvals and corresponding ratings, visit www.wago.com

THT male header ▸ *MCS* MIDI ▸ 721 Series

Pin spacing: 7.5 mm / 0.295 inches ▸ Solder pin dimensions: 1 x 1 mm ▸ Color: light gray

Mating direction to the PCB: 0 °



721-835/001-000

Pole number	Item No.	PU
2	721-832/001-000	200
3	721-833/001-000	200
4	721-834/001-000	100
5	721-835/001-000	100
6	721-836/001-000	100
7	721-837/001-000	50
8	721-838/001-000	50
9	721-839/001-000	50
10	721-840/001-000	50
11	721-841/001-000	50
12	721-842/001-000	50

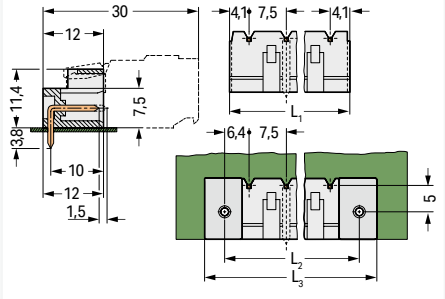

L_1 = (pole no. – 1) x pin spacing + 8.2 mm
$L_2 = L_1 + 5$ mm
$L_3 = L_2 + 7.4$ mm

Mating direction to the PCB: 90 °

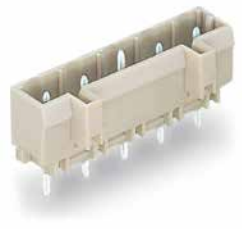

721-236/001-000

Pole number	Item No.	PU
2	721-232/001-000	200
3	721-233/001-000	200
4	721-234/001-000	100
5	721-235/001-000	100
6	721-236/001-000	100
7	721-237/001-000	50
8	721-238/001-000	50
9	721-239/001-000	50
10	721-240/001-000	50
11	721-241/001-000	50
12	721-242/001-000	50

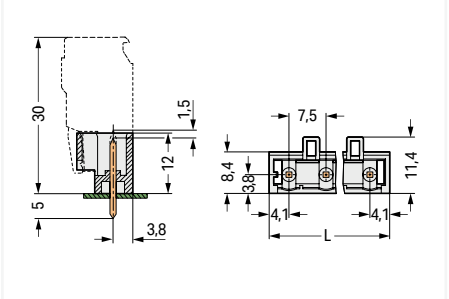

L = (pole no. – 1) x pin spacing + 8.2 mm

PU = packaging unit; SPU = subpackaging unit; Dimensions in mm

Variants:
- Other pole numbers
- 3.8 mm pin projection for male headers with straight solder pins
- Gold-plated or partially gold-plated contact surfaces
- Other versions (or variants) can be requested from WAGO Sales or configured at https://configurator.wago.com/.

THT male header ▸ *MCS* MIDI ▸ 721 Series

Pin spacing: 7.5 mm / 0.295 inches ▸ Solder pin dimensions: 1.2 x 1.2 mm ▸ Color: light gray

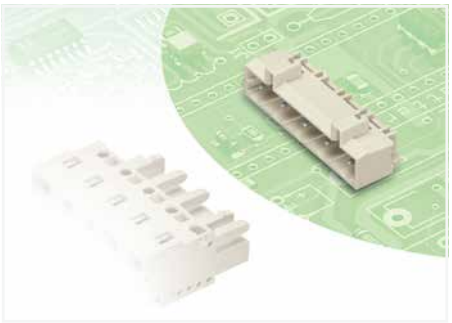

- Horizontal or vertical PCB mounting via straight or angled solder pins
- 1.2 x 1.2 mm solder pins allow nominal current up to 16 A, enhancing stability of shorter headers
- 100 % protected against mismating
- With coding fingers

Derating Curve
1-conductor female connector (721-102/026-000) with
THT male header (721-862/001-000)
Pin spacing: 7.5 mm / Conductor cross-section: 2.5 mm² "f-st"
Based on: EN 60512-5-2 / Reduction factor: 0.8

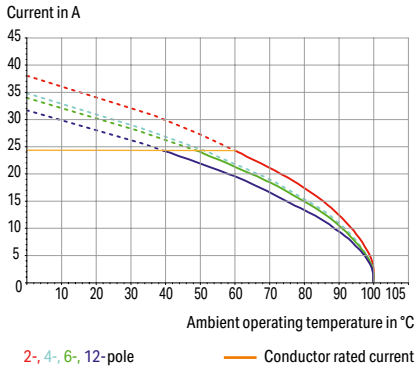

Electrical data			
Ratings per	**IEC/EN 60664-1**		
Overvoltage category	III	III	II
Pollution degree	3	2	2
Nominal voltage	500 V	630 V	1000 V
Rated impulse withstand voltage	6 kV	6 kV	6 kV
Rated current	16 A	16 A	16 A
Approvals per	**UL 1059**		
Use group	B	C	D
Rated voltage	300 V	-	300 V
Rated current	15 A	-	10 A
Approvals per	**CSA**		
Use group	B	C	D
Rated voltage	300 V	-	300 V
Rated current	15 A	-	10 A

Material data	
Material group	I
Insulation material (main housing)	Polyamide (PA66)
Flammability class per UL94	V0
Contact material	Electrolytic copper (E_{Cu})
Contact Plating	Tin

Mechanical data	
Solder pin arrangement	over the entire male connector (in-line)
Number of solder pins per potential	1
Solder pin dimensions	1.2 x 1.2 mm
Drilled hole diameter	1.7 $^{(+0.1)}$ mm

Environmental requirements	
Limit temperature range	-60 … +100 °C
Processing temperature	-35 … +60 °C

Note:
The *MCS – MULTI CONNECTION SYSTEM* includes connectors without breaking capacity in accordance with DIN EN 61984. When used as intended, these connectors must not be connected/disconnected when live or under load.When used as intended, these connectors must not be connected/disconnected when live or under load. The circuit design should ensure header pins, which can be touched, are not live when unmated.

Coding Page 638

See technical section for further information

Approvals and corresponding ratings, visit www.wago.com

THT male header ▸ *MCS* MIDI ▸ 721 Series

Pin spacing: 7.5 mm / 0.295 inches ▸ Solder pin dimensions: 1.2 x 1.2 mm ▸ Color: light gray

Mating direction to the PCB: 0 °



721-865/001-000

Pole number	Item No.	PU
2	721-862/001-000	200
3	721-863/001-000	200
4	721-864/001-000	100
5	721-865/001-000	100
6	721-866/001-000	100
7	721-867/001-000	50
8	721-868/001-000	50
9	721-869/001-000	50
10	721-870/001-000	50
11	721-871/001-000	50
12	721-872/001-000	50

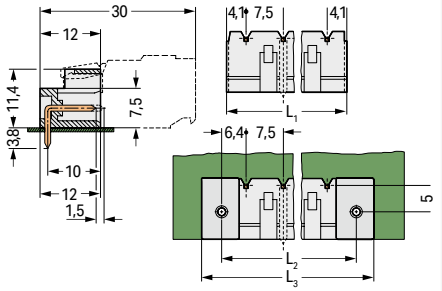

L_1 = (pole no. – 1) x pin spacing + 8.2 mm
$L_2 = L_1 + 5$ mm
$L_3 = L_2 + 7.4$ mm

Mating direction to the PCB: 90 °



721-265/001-000

Pole number	Item No.	PU
2	721-262/001-000	100
3	721-263/001-000	200
4	721-264/001-000	100
5	721-265/001-000	100
6	721-266/001-000	100
7	721-267/001-000	50
8	721-268/001-000	50
9	721-269/001-000	50
10	721-270/001-000	50
11	721-271/001-000	50
12	721-272/001-000	50

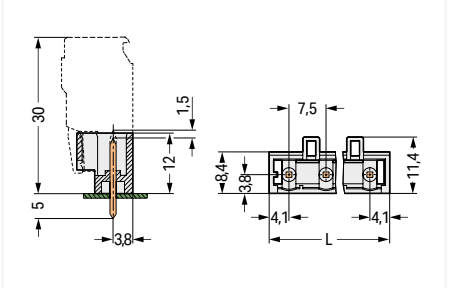

L = (pole no. – 1) x pin spacing + 8.2 mm

PU = packaging unit; SPU = subpackaging unit; Dimensions in mm

Variants:

- Other pole numbers
- 3.8 mm pin projection for male headers with straight solder pins
- Gold-plated or partially gold-plated contact surfaces
- Other versions (or variants) can be requested from WAGO Sales or configured at https://configurator.wago.com/.

THT male header ▸ *MCS* MIDI ▸ 721 Series

Pin spacing: 7.5 mm / 0.295 inches ▸ Preceding PE contact ▸ Solder pin dimensions: 1 x 1 mm ▸ Color: light gray

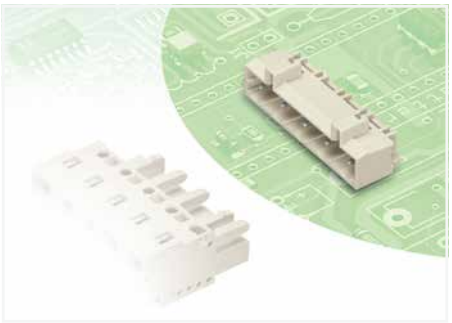

- Horizontal or vertical PCB mounting via straight or angled solder pins
- Pin cross-section: 1 x 1 mm
- 100 % protected against mismating
- With coding fingers

Derating Curve
1-conductor female connector (721-102/026-000) with THT male header (721-862/001-000)
Pin spacing: 7.5 mm / Conductor cross-section: 2.5 mm² "f-st"
Based on: EN 60512-5-2 / Reduction factor: 0.8

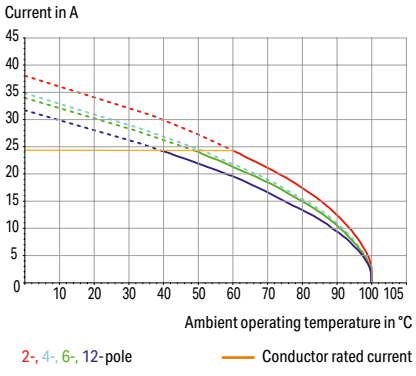

Electrical data			
Ratings per	**IEC/EN 60664-1**		
Overvoltage category	III	III	II
Pollution degree	3	2	2
Nominal voltage	500 V	630 V	1000 V
Rated impulse withstand voltage	6 kV	6 kV	6 kV
Rated current	12 A	12 A	12 A
Approvals per	**UL 1059**		
Use group	B	C	D
Rated voltage	300 V	-	300 V
Rated current	15 A	-	10 A
Approvals per	**CSA**		
Use group	B	C	D
Rated voltage	300 V	-	300 V
Rated current	15 A	-	10 A

Material data	
Material group	I
Insulation material (main housing)	Polyamide (PA66)
Flammability class per UL94	V0
Contact material	Electrolytic copper (E_{Cu})
Contact Plating	Tin

Mechanical data	
Solder pin arrangement	over the entire male connector (in-line)
Number of solder pins per potential	1
Solder pin dimensions	1 x 1 mm
Drilled hole diameter	1.4 $^{(+0.1)}$ mm

Environmental requirements	
Limit temperature range	-60 … +100 °C
Processing temperature	-35 … +60 °C

Note:
The *MCS – MULTI CONNECTION SYSTEM* includes connectors without breaking capacity in accordance with DIN EN 61984. When used as intended, these connectors must not be connected/disconnected when live or under load.When used as intended, these connectors must not be connected/disconnected when live or under load. The circuit design should ensure header pins, which can be touched, are not live when unmated.

Coding Page 638

See technical section for further information

Approvals and corresponding ratings, visit www.wago.com

THT male header ▸ *MCS* MIDI ▸ 721 Series

Pin spacing: 7.5 mm / 0.295 inches ▸ Preceding PE contact ▸ Solder pin dimensions: 1 x 1 mm ▸ Color: light gray

Mating direction to the PCB: 0 °



721-835/001-040

Pole number	Item No.	PU
3	**721-833/001-040**	200
4	**721-834/001-040**	100
5	**721-835/001-040**	100

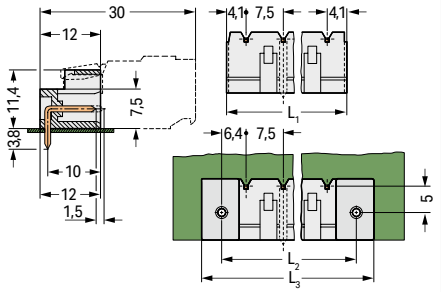

L_1 = (pole no. – 1) x pin spacing + 8.2 mm
$L_2 = L_1 + 5$ mm
$L_3 = L_2 + 7.4$ mm

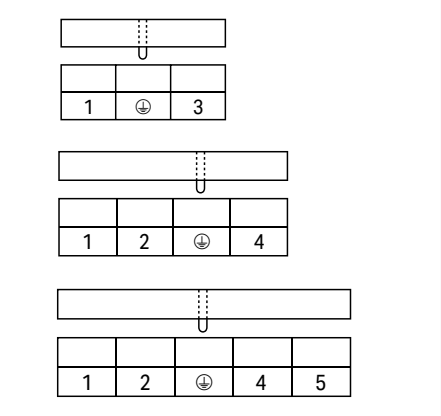

Preceding PE contact position

Mating direction to the PCB: 90 °

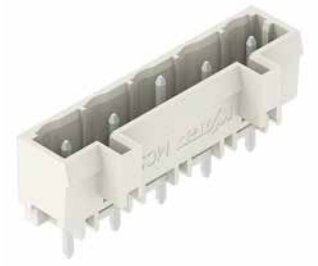

721-235/001-040

Pole number	Item No.	PU
3	**721-233/001-040**	200
4	**721-234/001-040**	100
5	**721-235/001-040**	100

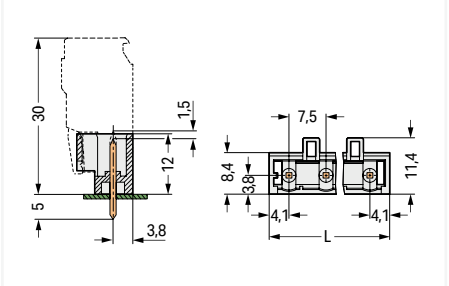

L = (pole no. – 1) x pin spacing + 8.2 mm

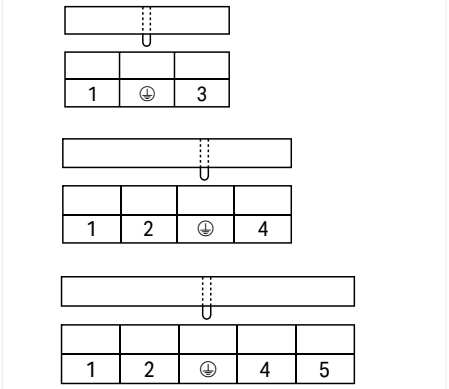

Preceding PE contact position

PU = packaging unit; SPU = subpackaging unit; Dimensions in mm

Variants:
- Other pole numbers
- 3.8 mm pin projection for male headers with straight solder pins
- Gold-plated or partially gold-plated contact surfaces
- Other versions (or variants) can be requested from WAGO Sales or configured at https://configurator.wago.com/.

THT male header ▸ *MCS* MIDI ▸ 721 Series

Pin spacing: 7.5 mm / 0.295 inches ▸ Preceding PE contact ▸ Solder pin dimensions: 1.2 x 1.2 mm ▸ Color: light gray

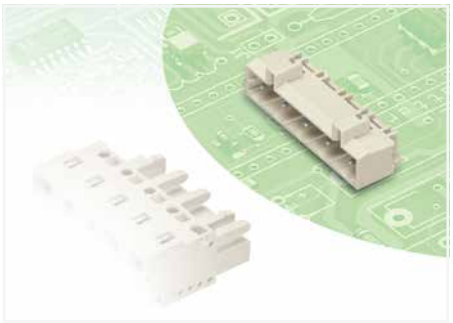

- Horizontal or vertical PCB mounting via straight or angled solder pins
- 1.2 x 1.2 mm solder pins allow nominal current up to 16 A, enhancing stability of shorter headers
- 100 % protected against mismating
- With coding fingers

Derating Curve
1-conductor female connector (721-102/026-000) with THT male header (721-862/001-000)
Pin spacing: 7.5 mm / Conductor cross-section: 2.5 mm² "f-st"
Based on: EN 60512-5-2 / Reduction factor: 0.8

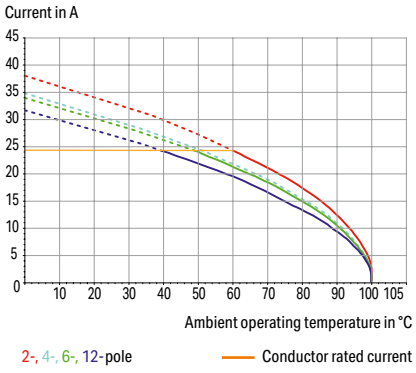

Electrical data			
Ratings per	**IEC/EN 60664-1**		
Overvoltage category	III	III	II
Pollution degree	3	2	2
Nominal voltage	500 V	630 V	1000 V
Rated impulse withstand voltage	6 kV	6 kV	6 kV
Rated current	16 A	16 A	16 A
Approvals per	**UL 1059**		
Use group	B	C	D
Rated voltage	300 V	-	300 V
Rated current	15 A	-	10 A
Approvals per	**CSA**		
Use group	B	C	D
Rated voltage	300 V	-	300 V
Rated current	15 A	-	10 A

Material data	
Material group	I
Insulation material (main housing)	Polyamide (PA66)
Flammability class per UL94	V0
Contact material	Electrolytic copper (E_{Cu})
Contact Plating	Tin

Mechanical data	
Solder pin arrangement	over the entire male connector (in-line)
Number of solder pins per potential	1
Solder pin dimensions	1.2 x 1.2 mm
Drilled hole diameter	1.7 $^{(+0.1)}$ mm

Environmental requirements	
Limit temperature range	-60 … +100 °C
Processing temperature	-35 … +60 °C

Note:
The *MCS – MULTI CONNECTION SYSTEM* includes connectors without breaking capacity in accordance with DIN EN 61984. When used as intended, these connectors must not be connected/disconnected when live or under load.When used as intended, these connectors must not be connected/disconnected when live or under load. The circuit design should ensure header pins, which can be touched, are not live when unmated.

Coding Page 638

See technical section for further information

Approvals and corresponding ratings, visit www.wago.com

THT male header ▸ *MCS* MIDI ▸ 721 Series

Pin spacing: 7.5 mm / 0.295 inches ▸ Preceding PE contact ▸ Solder pin dimensions: 1.2 x 1.2 mm ▸ Color: light gray

Mating direction to the PCB: 0 °



721-865/001-040

Pole number	Item No.	PU
3	**721-863/001-040**	200
4	**721-864/001-040**	100
5	**721-865/001-040**	100

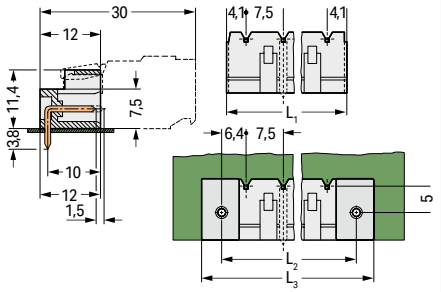

L_1 = (pole no. – 1) x pin spacing + 8.2 mm
$L_2 = L_1 + 5$ mm
$L_3 = L_2 + 7.4$ mm

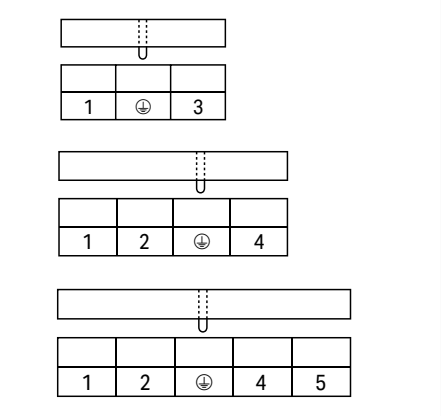

Preceding PE contact position

Mating direction to the PCB: 90 °



721-265/001-040

Pole number	Item No.	PU
3	**721-263/001-040**	200
4	**721-264/001-040**	100
5	**721-265/001-040**	100

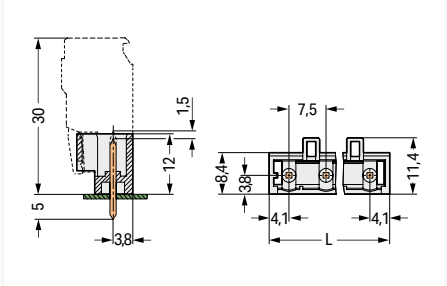

L = (pole no. – 1) x pin spacing + 8.2 mm

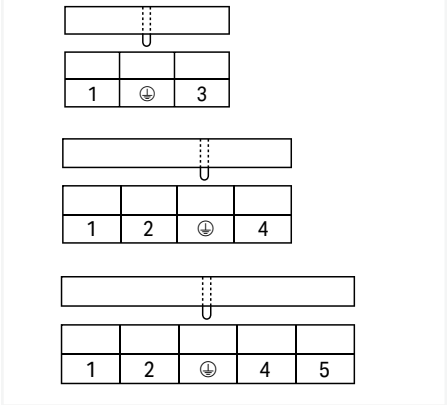

Preceding PE contact position

PU = packaging unit; SPU = subpackaging unit; Dimensions in mm

Variants:

- Other pole numbers
- 3.8 mm pin projection for male headers with straight solder pins
- Gold-plated or partially gold-plated contact surfaces
- Other versions (or variants) can be requested from WAGO Sales or configured at https://configurator.wago.com/.

Direct Marking

MCS MIDI and *MCS* MIDI Classic



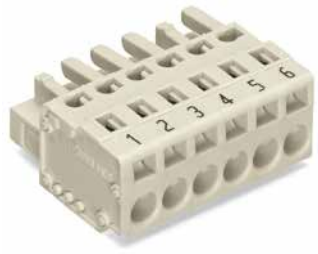

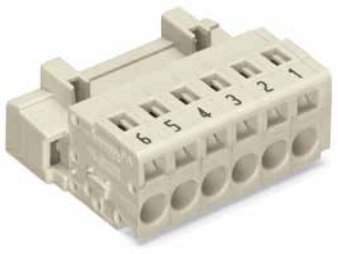

The pole numbers of male and female connectors for CAGE CLAMP® termination can be marked via factory direct marking.

Two standard marking orientations are available:
1. Marking perpendicular to conductor entry
2. Marking parallel to conductor entry

Other custom marking options are available upon request.

Direct marking is not suitable for MCS PCB Male Headers. WAGO recommends pole marking on the PCB for these headers.

Female headers with solder pins are exposed to aggressive flux agents during wave soldering. Custom direct marking procedures are available upon request for these items.

The marking type is always defined by the second 4-digit block of the item no. suffix for items with standard colors and materials.
Example: 721-106/. . . . - xxxx
xxxx = Item no. suffix for direct marking

Direct marking of 1-conductor female connectors; perpendicular to conductor entry; 1 … pole no.;
item no. suffix.: /. . . - 047

Version	Item No. Example
1-conductor female connector; 5 mm pin spacing; 6-pole; light gray	**721-106/026-047**
1-conductor female connector; with locking levers; 5 mm pin spacing; 6-pole; light gray	**721-106/037-047**
1-conductor female connector; with strain relief plate; 5 mm pin spacing; 6-pole; light gray	**721-106/026-047/ 034-000**
1-conductor female connector; with locking levers and strain relief plate; 5 mm pin spacing; 6-pole; light gray	**721-106/026-047/ 034-000**

Direct marking of 1-conductor male connectors; perpendicular to conductor entry; pole no. … 1;
item no. suffix.: /. . . - 044

Version	Item No. Example
1-conductor male connector; 6-pole; light gray	**721-606/000-044**
1-conductor male connector; with mounting flanges; 6-pole; light gray	**721-606/019-044**
1-conductor male connector; with mounting flanges and strain relief plate; 6-pole; light gray	**721-606/019-044/ 034-000**

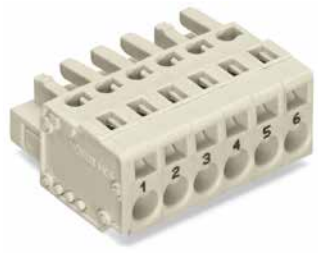



Direct marking of 1-conductor female connectors; parallel to conductor entry; 1 … pole no.;
item no. suffix.: /. . . - 9037

Version	Item No. Example
1-conductor female connector; 5 mm pin spacing; 6-pole; light gray	**721-106/026-9037**
1-conductor female connector; with locking levers; 5 mm pin spacing; 6-pole; light gray	**721-106/037-9037**
1-conductor female connector; with strain relief plate; 5 mm pin spacing; 6-pole; light gray	**721-106/026-9037/ 034-000**
1-conductor female connector; with locking levers and strain relief plate; 5 mm pin spacing; 6-pole; light gray	**721-106/037-9037/ 034-000**

Direct marking of 1-conductor male connectors; parallel to conductor entry; pole no. … 1;
item no. suffix.: /. . . - 9034

Version	Item No. Example
1-conductor male connector; 5 mm pin spacing; 6-pole; light gray	**721-606/000-9034**
1-conductor male connector; with mounting flanges; 5 mm pin spacing; 6-pole; light gray	**721-606/019-9034**
1-conductor male connector; with mounting flanges and strain relief plate; 5 mm pin spacing; 6-pole; light gray	**721-606/019-9034/ 034-000**

Direct Marking

MCS MIDI and *MCS* MIDI Classic



Direct marking of 1-conductor female connectors with push-buttons; perpendicular to conductor entry; 1 … pole no.; item no. suffix.: /. . . - 047	
Version	**Item No. Example**
1-conductor female connector; with push-buttons; 5 mm pin spacing; 6-pole; light gray	**2721-106/026-047**
1-conductor female connector; with locking levers; 5 mm pin spacing; 6-pole; light gray	**2721-106/037-047**
1-conductor female connector; with push-buttons and strain relief plate; 5 mm pin spacing; 6-pole; light gray	**2721-106/026-047/ 134-000**
1-conductor female connector; with push-buttons; locking levers and strain relief plate; 5 mm pin spacing; 6-pole; light gray	**2721-106/037-047/ 134-000**

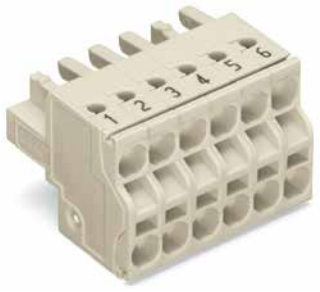

Direct marking of 2-conductor female connectors; perpendicular to conductor entry; 1 … pole no.; item no. suffix.: /. . . - 047	
Version	**Item No. Example**
2-conductor female connector; 6-pole; light gray	**721-2106/026-047**
2-conductor female connector; with locking levers; 6-pole; light gray	**721-2106/037-047**
2-conductor female connector; with locking levers and strain relief plate; 6-pole; light gray	**721-2106/026-047/ 134-000**



Direct marking of 1-conductor angled female connectors; perpendicular to conductor entry; 1 … pole no.; item no. suffix.: /. . . - 047	
Version	**Item No. Example**
1-conductor angled female connector; 6-pole; light gray	**722-206/026-047**
1-conductor angled female connector; with strain relief plate; 6-pole; light gray	**722-206/026-047/ 034-000**



Direct marking of 1-conductor female connectors with push-buttons; parallel to conductor entry; 1 … pole no.; item no. suffix.: /. . . - 9037	
Version	**Item No. Example**
1-conductor female connector; with push-buttons; 5 mm pin spacing; 6-pole; light gray	**2721-106/026-9037**
1-conductor female connector; with push-buttons and locking levers; 5 mm pin spacing; 6-pole; light gray	**2721-106/037-9037**
1-conductor female connector; with push-buttons and strain relief plate; 5 mm pin spacing; 6-pole; light gray	**2721-106/026-9037/ 134-000**
1-conductor female connector; with push-buttons; locking levers and strain relief plate; 5 mm pin spacing; 6-pole; light gray	**2721-106/037-9037/ 134-000**



Direct marking of 2-conductor female connectors; parallel to conductor entry; 1 … pole no.; item no. suffix.: /. . . - 9037	
Version	**Item No. Example**
2-conductor female connector; 5 mm pin spacing; 6-pole; light gray	**721-2106/026-9037**
2-conductor female connector; with locking levers; 5 mm pin spacing; 6-pole; light gray	**721-2106/037-9037**
2-conductor female connector; with locking levers and strain relief plate; 5 mm pin spacing 6-pole; light gray	**721-2106/026-9037/ 134-000**



Direct marking of 1-conductor angled female connectors; parallel to conductor entry; 1 … pole no.; item no. suffix.: /. . . - 047	
Version	**Item No. Example**
1-conductor angled female connector; 5 mm pin spacing; 6-pole; light gray	**722-206/026-9037**
1-conductor angled female connector; with strain relief plate; 5 mm pin spacing; 6-pole; light gray	**722-206/026-9037/ 034-000**

8

Direct Marking

MCS MIDI and *MCS* MIDI Classic

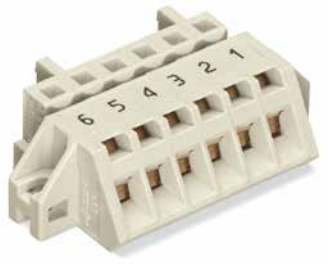

Direct marking of 2-conductor angled female connectors for panel mounting; perpendicular to conductor entry; 1 ... pole no.; item no. suffix.: /. . . - 047

Version	Item No. Example
1-conductor angled female connector; with flanges for panel mounting; 5 mm pin spacing; 6-pole; light gray	**721-306/031-047**
1-conductor angled female connector; for panel mounting; with snap-in mounting feet; 5 mm pin spacing; 6-pole; light gray	**721-306/008-047**

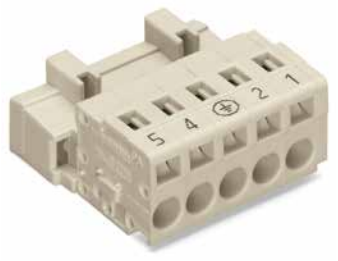

Direct marking of 3- to 5-pole; 1-conductor male connectors with preceding ground contact; perpendicular to conductor entry; pole assignment;
item no. suffix.: /. . . - 042

Version	Item No. Example
1-conductor male connector; with preceding ground contact; 5 mm pin spacing; 5-pole; light gray	**721-605/000-042**

1-conductor male connectors in 3- to 5-pole versions (721 and 723 Series) are available with the following markings:

3-pole: 3 - ⏚ - 1
4-pole: 4 - ⏚ - 2 - 1
5-pole: 5 - 4 - ⏚ - 2 - 1

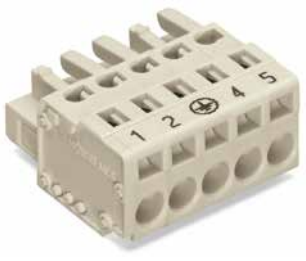

Direct marking of 3- to 5-pole; 1-conductor female connectors for 1-conductor male connectors with preceding ground contact; perpendicular to conductor entry; pole assignment; item no. suffix.: /. . . - 045

Version	Item No. Example
1-conductor female connector; with preceding ground contact; 5 mm pin spacing; 5-pole; light gray	**721-105/026-045**

1-conductor female connectors in 3- to 5-pole versions (721, 2721, 722 and 723 Series) for 1-conductor male connectors with preceding ground contact are available with the following markings:

3-pole: 1 - ⏚ - 3
4-pole: 1 - 2 - ⏚ - 4
5-pole: 1 - 2 - ⏚ - 4 - 5



Direct marking of 1-conductor angled female connectors for panel mounting; parallel to conductor entry; 1 ... pole no.; item no. suffix.: /. . . - 9037

Version	Item No. Example
1-conductor angled female connector; with flanges for panel mounting; 5 mm pin spacing; 6-pole; light gray	**721-306/031-9037**
1-conductor angled female connector; for panel mounting; with snap-in mounting feet; 5 mm pin spacing; 6-pole; light gray	**721-306/008-9037**

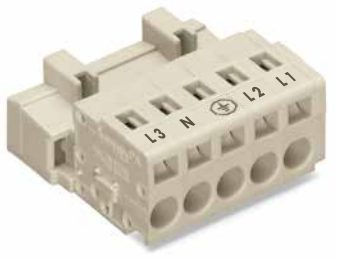

Direct marking of 3- to 5-pole; 1-conductor male connectors with preceding ground contact; perpendicular to conductor entry; pole assignment;
item no. suffix.: /. . . - 041

Version	Item No. Example
1-conductor male connector; with preceding ground contact; 5 mm pin spacing; 5-pole; light gray	**721-605/000-041**

1-conductor male connectors in 3- to 5-pole versions (721 and 723 Series) are available with the following markings:

3-pole: N - ⏚ - L 1
4-pole: L 2 - ⏚ - N - L 1
5-pole: L 3 - N - ⏚ - L 2 - L 1

Pole no. ... 1; item no. suffix.: /. . . - 043

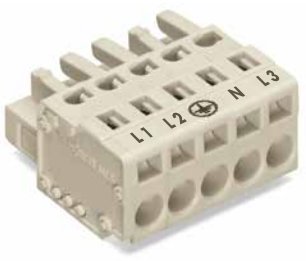

Direct marking of 3- to 5-pole; 1-conductor female connectors for 1-conductor male connectors with preceding ground contact; perpendicular to conductor entry; pole assignment; item no. suffix.: /. . . - 046

Version	Item No. Example
1-conductor female connector; with preceding ground contact; 5 mm pin spacing; 5-pole; light gray	**721-105/026-046**

1-conductor female connectors in 3- to 5-pole versions (721, 2721, 722 and 723 Series) for 1-conductor male connectors with preceding ground contact are available with the following markings:

3-pole: L 1 - ⏚ - N
4-pole: L 1 - N - ⏚ - L 2
5-pole: L 1 - L 2 - ⏚ - N - L 3

1 ... pole no.; item no. suffix.: /. . . - 047

Cutout Dimensions

MCS MIDI

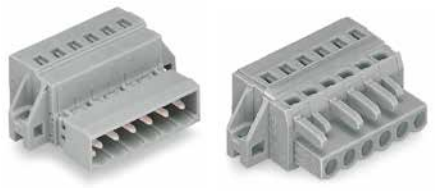



Table 1:
Cutout for 231. 721. 723 and 731 Series Male and Female Connectors with Mounting Flanges

	Pin Spacing 5 mm		Pin Spacing 5.08 mm		Pin Spacing 7.5 mm		Pin Spacing 7.62 mm	
Pole No.	L1	L2	L1	L2	L1	L2	L1	L2
2	13.4	18.4	13.6	18.6	15.9	20.9	16	21
3	18.4	23.4	18.6	23.6	23.4	28.4	23.6	28.6
4	23.4	28.4	23.7	28.7	30.9	35.9	31.3	36.3
5	28.4	33.4	28.8	33.8	38.4	43.4	38.9	43.9
6	33.5	38.3	34	38.8	46	50.8	46.6	51.4
7	38.5	43.3	39.1	43.9	53.5	58.3	54.2	59
8	43.5	48.3	44.1	48.9	61	65.8	61.8	66.6
9	48.5	53.3	49.2	54	68.5	73.3	69.5	74.3
10	53.5	58.3	54.3	59.1	76	80.8	77.1	81.9
11	58.5	63.3	59.4	64.2	83.5	88.3	84.7	89.5
12	63.5	68.3	64.5	69.3	91	95.8	92.3	97.1
13	68.6	73.2	69.6	74.2	98.6	103.2	100	104.6
14	73.6	78.2	74.7	79.3	106.1	110.7	107.7	112.3
15	78.6	83.2	79.8	84.4	113.6	118.2	115.3	119.9
16	83.6	88.2	84.9	89.5	121.1	125.7	122.9	127.5
17	88.6	93.2	90	94.6	128.6	133.2	130.5	135.1
18	93.6	98.2	95	99.6	136.1	140.7	138.1	142.7
19	98.7	103.1	100.2	104.6	143.7	148.1	145.9	150.3
20	103.7	108.1	105.3	109.7	151.2	155.6	153.5	157.9
21	108.7	113.1	110.4	114.8	158.7	163.1	161.1	165.5
22	113.7	118.1	115.5	119.9	166.2	170.6	168.7	173.1
23	118.7	123.1	120.5	124.9	173.7	178.1	176.3	180.7
24	123.7	128.1	125.6	130	181.2	185.6	184	188.4

Self-tapping screws,
for 1.8 mm ± 0.1 mm Ø mounting hole

Dimensions	Item No.	PU (SPU)
B 2.2 x 9.5 mm	**209-147**	200 (100)
B 2.2 x 13 mm	**231-194**	200 (100)

Screws with nuts,
for 2.5 mm ± 0.1 mm Ø mounting hole

Dimensions	Item No.	PU (SPU)
M 2 x 12 mm	**231-195**	200 (100)

Screws with nuts,
for 3.0 mm ± 0.1 mm Ø mounting hole

Dimensions	Item No.	PU (SPU)
M 2.5 x 10 mm	**231-295**	200 (100)

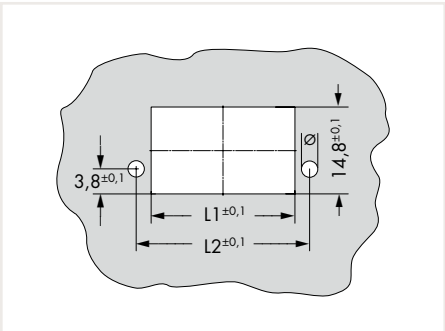

Drilled hole Ø depends on the type of screw used (see mounting screws).

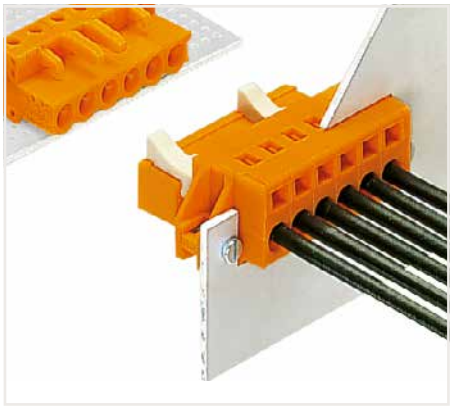

PU = Packaging Unit; SPU = Subpackaging Unit; Dimensions in mm

Additional information on through-panel mounting and cutout dimensions is available upon request.

Cutout Dimensions

MCS MIDI





Table 2:
Cutout for 2721 and 2231 Series Female Connectors with Mounting Flanges

	Pin Spacing 5 mm		Pin Spacing 5.08 mm		Pin Spacing 7.5 mm		Pin Spacing 7.62 mm	
Pole No.	L1	L2	L1	L2	L1	L2	L1	L2
2	13.2	18.4	13.4	18.6	15.7	20.9	15.8	21
3	18.2	23.4	18.4	23.6	23.2	28.4	23.4	28.6
4	23.2	28.4	23.5	28.7	30.7	35.9	31.1	36.3
5	28.2	33.4	28.6	33.8	38.2	43.4	38.7	43.9
6	33.4	38.3	33.9	38.8	45.9	50.8	46.5	51.4
7	38.4	43.3	39	43.9	53.4	58.3	54.1	59
8	43.4	48.3	44	48.9	60.9	65.8	61.7	66.6
9	48.4	53.3	49.1	54	68.4	73.3	69.4	74.3
10	53.4	58.3	54.2	59.1	75.9	80.8	77	81.9
11	58.4	63.3	59.3	64.2	83.4	88.3	84.6	89.5
12	63.4	68.3	64.4	69.3	90.9	95.8	92.2	97.1
13	68.6	73.2	69.6	74.2	98.6	103.2	100	104.6
14	73.6	78.2	74.7	79.3	106.1	110.7	107.7	112.3
15	78.6	83.2	79.8	84.4	113.6	118.2	115.3	119.9
16	83.6	88.2	84.9	89.5	121.1	125.7	122.9	127.5
17	88.6	93.2	90	94.6	128.6	133.2	130.5	135.1
18	93.6	98.2	95	99.6	136.1	140.7	138.1	142.7
19	98.8	103.1	100.3	104.6	143.8	148.1	146	150.3
20	103.8	108.1	105.4	109.7	151.3	155.6	153.6	157.9
21	108.8	113.1	110.5	114.8	158.8	163.1	161.2	165.5
22	113.8	118.1	115.6	119.9	166.3	170.6	168.8	173.1
23	118.8	123.1	120.6	124.9	173.8	178.1	176.4	180.7
24	123.8	128.1	125.7	130	181.3	185.6	184.1	188.4

Self-tapping screws,
for 1.8 mm ± 0.1 mm Ø mounting hole

Dimensions	Item No.	PU (SPU)
B 2.2 x 9.5 mm	**209-147**	200 (100)
B 2.2 x 13 mm	**231-194**	200 (100)

Screws with nuts,
for 2.5 mm ± 0.1 mm Ø mounting hole

Dimensions	Item No.	PU (SPU)
M 2 x 12 mm	**231-195**	200 (100)

Screws with nuts,
for 3.0 mm ± 0.1 mm Ø mounting hole

Dimensions	Item No.	PU (SPU)
M 2.5 x 10 mm	**231-295**	200 (100)

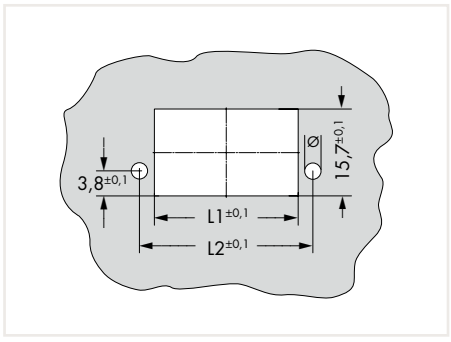

Drilled hole Ø depends on the type of screw used (see mounting screws).

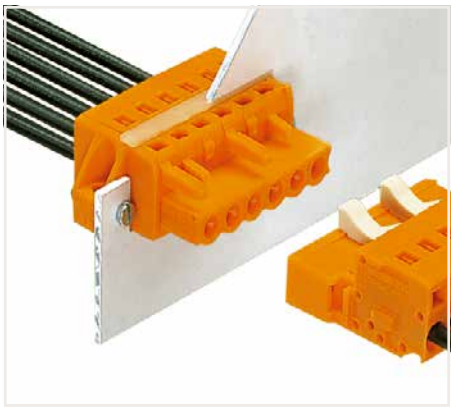

PU = Packaging Unit; SPU = Subpackaging Unit; Dimensions in mm

Additional information on through-panel mounting and cutout dimensions is available upon request.

Cutout Dimensions

MCS MIDI

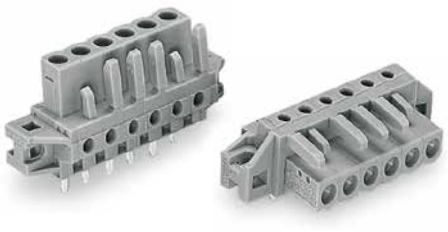



Table 3:
Cutout for 232 and 722 Series THT Female Headers with Mounting Flanges

	Pin Spacing 5 mm		Pin Spacing 5.08 mm		Pin Spacing 7.5 mm		Pin Spacing 7.62 mm	
Pole No.	L1	L2	L1	L2	L1	L2	L1	L2
2	13.4	18.4	13.6	18.6	15.9	20.9	16	21
3	18.4	23.4	18.6	23.6	23.4	28.4	23.6	28.6
4	23.4	28.4	23.7	28.7	30.9	35.9	31.3	36.3
5	28.4	33.4	28.8	33.8	38.4	43.4	38.9	43.9
6	33.5	38.3	34	38.8	46	50.8	46.6	51.4
7	38.5	43.3	39.1	43.9	53.5	58.3	54.2	59
8	43.5	48.3	44.1	48.9	61	65.8	61.8	66.6
9	48.5	53.3	49.2	54	68.5	73.3	69.5	74.3
10	53.5	58.3	54.3	59.1	76	80.8	77.1	81.9
11	58.5	63.3	59.4	64.2	83.5	88.3	84.7	89.5
12	63.5	68.3	64.5	69.3	91	95.8	92.3	97.1
13	68.6	73.2	69.6	74.2	98.6	103.2	100	104.6
14	73.6	78.2	74.7	79.3	106.1	110.7	107.7	112.3
15	78.6	83.2	79.8	84.4	113.6	118.2	115.3	119.9
16	83.6	88.2	84.9	89.5	121.1	125.7	122.9	127.5
17	88.6	93.2	90	94.6	128.6	133.2	130.5	135.1
18	93.6	98.2	95	99.6	136.1	140.7	138.1	142.7
19	98.7	103.1	100.2	104.6	143.7	148.1	145.9	150.3
20	103.7	108.1	105.3	109.7	151.2	155.6	153.5	157.9
21	108.7	113.1	110.4	114.8	158.7	163.1	161.1	165.5
22	113.7	118.1	115.5	119.9	166.2	170.6	168.7	173.1
23	118.7	123.1	120.5	124.9	173.7	178.1	176.3	180.7
24	123.7	128.1	125.6	130	181.2	185.6	184	188.4

Self-tapping screws,
for 1.8 mm ± 0.1 mm Ø mounting hole

Dimensions	Item No.	PU (SPU)
B 2.2 x 9,5 mm	**209-147**	200 (100)
B 2.2 x 13 mm	**231-194**	200 (100)

Screws with nuts,
for 2.5 mm ± 0.1 mm Ø mounting hole

Dimensions	Item No.	PU (SPU)
M 2 x 12 mm	**231-195**	200 (100)

Screws with nuts,
for 3.0 mm ± 0.1 mm Ø mounting hole

Dimensions	Item No.	PU (SPU)
M 2.5 x 10 mm	**231-295**	200 (100)

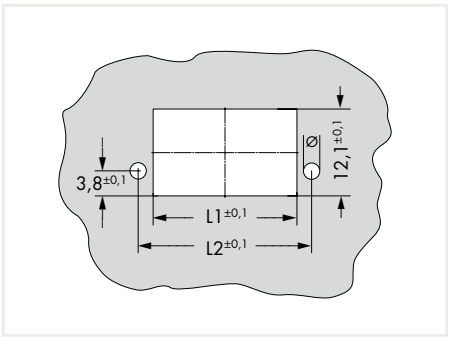

Drilled hole Ø depends on the type of screw used (see mounting screws).

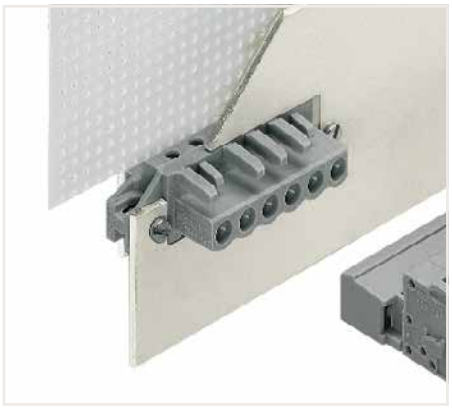

PU = Packaging Unit; SPU = Subpackaging Unit; Dimensions in mm

Additional information on through-panel mounting and cutout dimensions is available upon request.

Cutout Dimensions

MCS MIDI

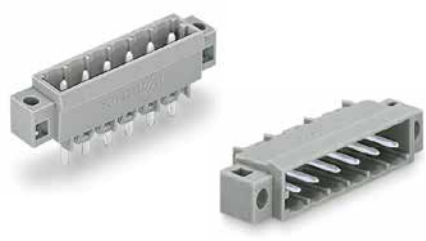



Table 4:
Cutout for 231 Series THT Male Headers with Mounting Flanges

	Pin Spacing 5 mm			Pin Spacing 7,5 mm		
Pole No.	L1	L2	L3	L1	L2	L3
2	13.6	8.9	9.5	16.1	10.6	10.8
3	18.6	11.4	12	23.6	14.3	14.5
4	23.6	13.9	14.5	31.1	18.1	18.3
5	28.6	16.4	17	38.6	21.8	22
6	33.8	19	19.6	46.3	25.7	25.9
7	38.8	21.5	22.1	53.8	29.4	29.6
8	43.8	24	24.6	61.3	33.2	33.4
9	48.8	26.5	27.1	68.8	36.9	37.1
10	53.8	29	29.6	76.3	40.7	40.9
11	58.8	31.5	32.1	83.8	44.4	44.6
12	63.8	34	34.6	91.3	48.2	48.4
13	69	36.6	37.2	99	52	52.2
14	74	39.1	39.7	106.5	55.8	56
15	79	41.6	42.2	114	59.5	59.7
16	84	44.1	44.7	121.5	63.3	63.5
17	89	46.6	47.2	129	67	67.2
18	94	49.1	49.7	136.5	70.8	71
19	99.2	51.7	52.3	144.2	74.6	74.8
20	104.2	54.2	54.8	151.7	78.4	78.6
21	109.2	56.7	57.3	159.2	82.1	82.3
22	114.2	59.2	59.8	166.7	85.9	86.1
23	119.2	61.7	62.3	174.2	89.6	89.8
24	124.2	64.2	64.8	181.7	93.4	93.6

Self-tapping screws,
for 1.8 mm ± 0.1 mm Ø mounting hole

Dimensions	Item No.	PU (SPU)
B 2.2 x 9.5 mm	**209-147**	200 (100)
B 2.2 x 13 mm	**231-194**	200 (100)

Screws with nuts,
for 2.5 mm ± 0.1 mm Ø mounting hole

Dimensions	Item No.	PU (SPU)
M 2 x 12 mm	**231-195**	200 (100)

Screws with nuts,
for 3.0 mm ± 0.1 mm Ø mounting hole

Dimensions	Item No.	PU (SPU)
M 2.5 x 10 mm	**231-295**	200 (100)

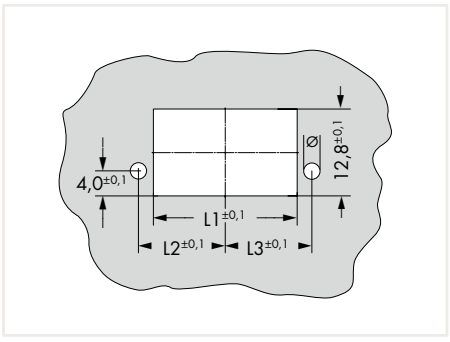

Drilled hole Ø depends on the type of screw used (see mounting screws).

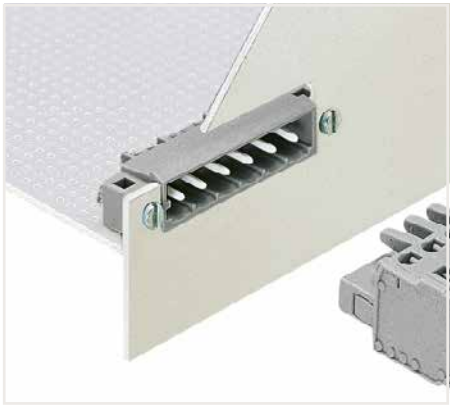

PU = Packaging Unit; SPU = Subpackaging Unit; Dimensions in mm

Additional information on through-panel mounting and cutout dimensions is available upon request.

Operating tool

Operating pliers ▸ Suitable: for male and female connectors with 3.5 mm, 3.81 mm, 5 mm, 5.08 mm, 7.5 mm and 7.62 mm pin spacing and CAGE CLAMP® connection ▸ Color: red



210-250

Color	Item No.	PU (SPU)
red	**210-250**	20 (1)

Operating lever ▸ Pin spacing: 5/7.62 mm ▸ Suitable: for male and female connectors with CAGE CLAMP® connection



231-131

Color	Item No.	PU (SPU)
white	**231-131**	100 (25)
red	**231-291**	100 (25)

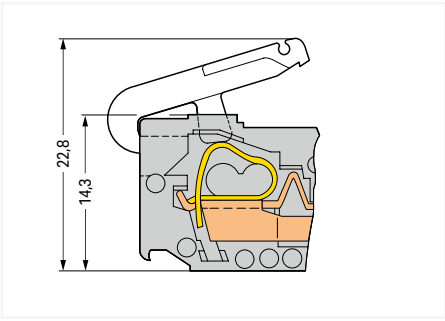

Operating levers are not suitable for panel-mount, angled female connectors.

Push-button/tool ▸ Pin spacing: 5/7.62 mm ▸ Suitable: for male and female connectors with CAGE CLAMP® connection



231-159

Color	Item No.	PU (SPU)
natural	**231-159**	100 (25)
red	**231-231**	100 (25)



Inserting a conductor via operating tool.



Inserting a conductor into CAGE CLAMP® unit via operating tool (231-291).



Conductor termination parallel to CAGE CLAMP® actuation

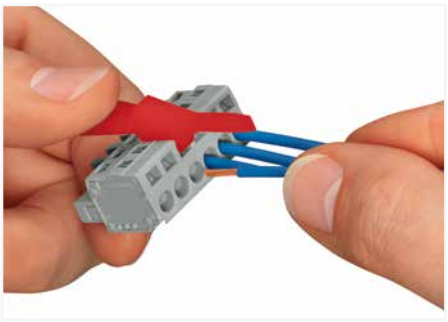

Conductor termination perpendicular to CAGE CLAMP® actuation

PU = packaging unit; SPU = subpackaging unit

Operating tool

Operation parallel to conductor entry ▸ Operating tool; insulated ▸ Pin spacing: 5/5.08 mm ▸ Suitable: for male and female connectors with CAGE CLAMP® connection ▸ Color: natural



209-130

Color	Item No.	PU (SPU)
natural	**209-130**	100 (1)

Operation parallel to conductor entry ▸ Operating tool; multipole; insulated ▸ Pin spacing: 5/5.08 mm ▸ Suitable: for male and female connectors with CAGE CLAMP® connection



280-440

Color	Item No.	PU (SPU)
white	**280-432**	100 (1)
white	**280-433**	100 (1)
white	**280-434**	40 (1)
gray	**280-435**	40 (1)
white	**280-436**	40 (1)
white	**280-437**	30 (1)
white	**280-438**	30 (1)
white	**280-440**	30 (1)



Inserting a male connector via multipole operating tool.

Operation perpendicular to conductor entry ▸ Operating tool; multipole; insulated ▸ Pin spacing: 5/5.08 mm ▸ Suitable: for male and female connectors with CAGE CLAMP® connection ▸ Color: natural



209-132

Color	Item No.	PU (SPU)
natural	**209-132**	40 (1)

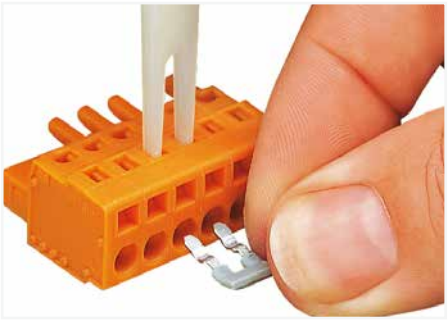

Operating tool for comb-style jumper bars (231-902)

8

PU = packaging unit; SPU = subpackaging unit

Coding

Coding key ▸ Suitable: for male connectors ▸ Color: light gray



Pin spacing: 5/5.08 mm		
Color	**Item No.**	PU (SPU)
◯ light gray	**231-129**	200 (100)

Pin spacing: 7.5/7.62 mm		
Color	**Item No.**	PU (SPU)
◯ light gray	**231-130**	200 (100)

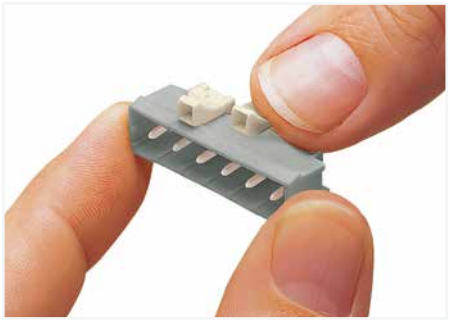

Coding a male header – fitting coding key(s).

Coding pin carrier with 5 coding pins ▸ Suitable: for female connectors with conductor connection and levers ▸ Color: orange



2231-505

Color	**Item No.**	PU
● orange	**2231-505**	25

8

PU = packaging unit; SPU = subpackaging unit

Cover ▸ Lockout cap ▸ Suitable: for male and female connectors with CAGE CLAMP® connection



Color	Item No.	PU (SPU)
gray	**231-668**	500 (100)
orange	**231-669**	500 (100)

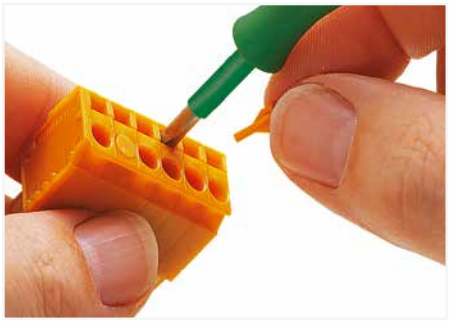

Covering unused clamping units in CAGE CLAMP®-equipped male and female connectors (e.g., when doubling the pin spacing to meet clearance and creepage distance requirements, or when a higher rated voltage is required). Lockout pins are not suitable for panel-mount, angled female connectors.

8

PU = packaging unit; SPU = subpackaging unit

Insulation stop ▸ Suitable: for male and female connectors with CAGE CLAMP® or Push-in CAGE CLAMP® connection



Pin spacing: 5/5.08 mm / 0.197/0.2 inches		
Color	**Item No.**	PU (SPU)
○ white	**231-670**	200 (25)
○ light gray	**231-671**	200 (25)
● dark gray	**231-672**	200 (25)

Pin spacing: 7.5/7.62 mm / 0.295/0.3 inches		
Color	**Item No.**	PU (SPU)
○ white	**231-673**	200
○ light gray	**231-674**	200
● dark gray	**231-675**	200 (25)



The problem: Wiring programmable logic controllers and microprocessor-operated control circuits often relies on very small, fine-stranded conductors. These conductors are highly flexible and deform when pushed against the conductor stop in terminal blocks. As a result, the conductor insulation – not the copper conductor – may be clamped, causing intermittent contact or no contact at all. Common to all terminal block types currently offered, this problem creates unnecessary downtime for troubleshooting.

Insulation stops for connectors reliably ensure proper termination. Insulation stops automatically bundle the cores of fine-stranded conductors when inserted into the clamping unit, preventing splaying. This also limits the conductor entry to a defined cross sectional area – ensuring the actual conductor, not the insulation, will enter the clamping unit.

Insulation stops are available as dividable 5-pole strips for MCS MIDI Male and Female Connectors. Insulation stop usage will not affect the conductor strip lengths for the aforementioned terminal strips.

Insulation stops are not suitable for panel-mount female connectors.

8

PU = packaging unit; SPU = subpackaging unit

Mounting accessories

Mounting screw ▸ Screw with nut; M2x12



231-195

Length	Item No.	PU (SPU)
12 mm	**231-195**	200 (100)

Mounting screw ▸ Self-tapping screw; B 2.2x13



209-147

Length	Item No.	PU (SPU)
13 mm	**231-194**	200 (100)

Mounting adapter, for DIN-35 rail ▸ Suitable: for male and female connectors with snap-in mounting feet ▸ Color: gray



209-137

Color	Item No.	PU
gray	**209-137**	25

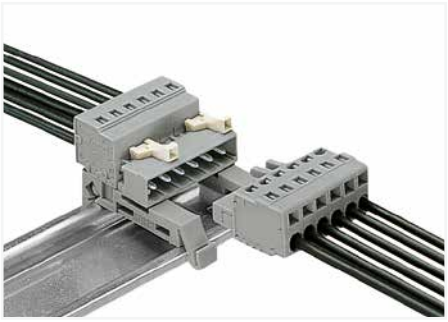

Female connector with snap-in mounting feet and 209-137 Mounting Adapter on DIN-35 rail

8

PU = packaging unit; SPU = subpackaging unit

Mounting accessories

Mounting foot, for DIN-35 rail ▸ Suitable: for male and female connectors with snap-in mounting feet (for panel mounting) ▸ Color: gray



209-120

Color	Item No.	PU (SPU)
gray	209-120	500 (25)

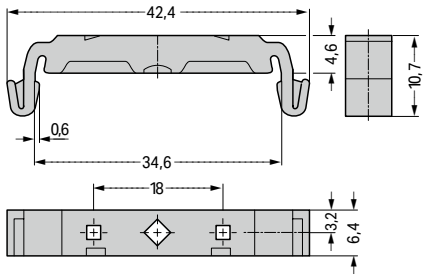

Multi mounting adapter ▸ Suitable: for male and female connectors with snap-in mounting feet ▸ Color: gray



209-148

Color	Item No.	PU
gray	209-148	25

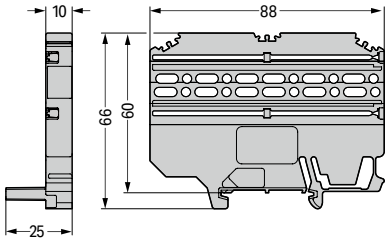



The pluggable male or female connector can also be fitted with a strain relief plate.

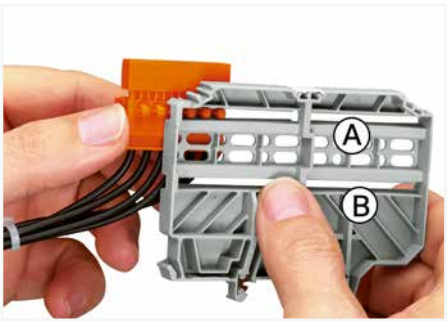

Both male and female connectors remain pluggable when they are mounted on the multi mounting adapter via its oblong holes or open grooves (A/B).



The adapter can be marked either with WSB, Mini-WSB or WMB markers.

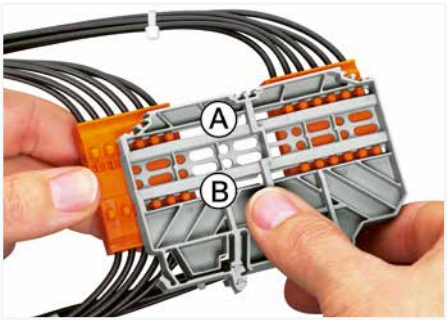

If a connector is pushed from the side into the open grooves (A/B) of the multi mounting adapter, the plug connection will be reliably protected from unintentional disconnection when mounted.



PU = packaging unit; SPU = subpackaging unit

Locking system ▸ Suitable: for female connectors with conductor connection and levers ▸ Color: orange

Lateral locking lever



2231-510

Color	Item No.	PU
orange	**2231-510**	50

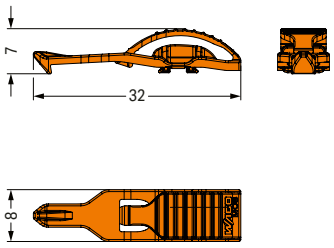

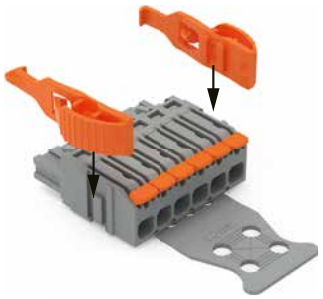

Install the side locking levers.

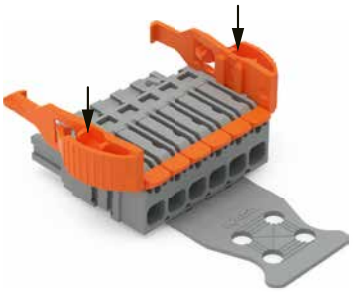

Insert the locking levers into the receptacles until fully inserted.

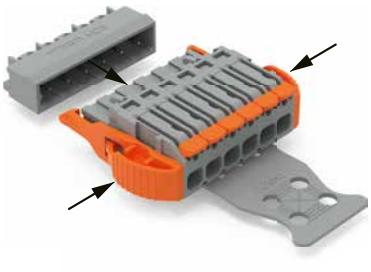

Disconnect the female connector after operating the locking mechanism.

PU = packaging unit; SPU = subpackaging unit; Dimensions in mm

8

Locking system ▸ Suitable: for female connectors with conductor connection and levers ▸ Color: orange

Center locking lever



2231-515

Color	Item No.	PU
orange	2231-515	100

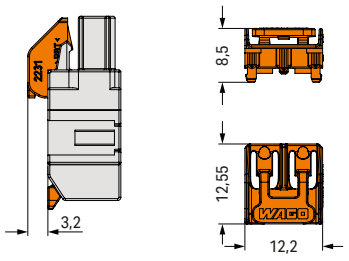

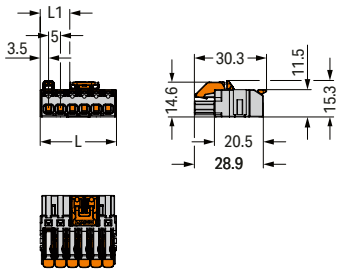

Pole no.	L	L1
5	27	7.4
6	32	12.4
7	37	12.4
8	42	17.4
10	52	22.4
12	62	27.4
16	82	37.4

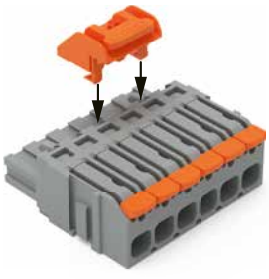

Install the center locking device.

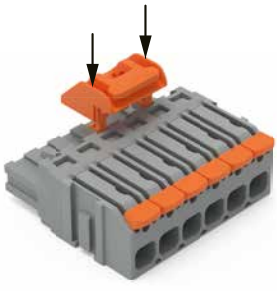

Insert the locking lever into the receptacles until fully inserted.

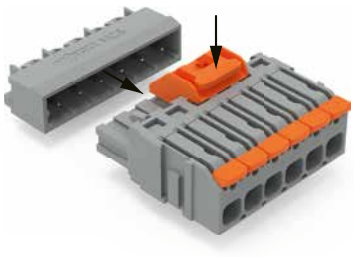

Disconnect the female connector after operating the locking mechanism.

PU = packaging unit; SPU = subpackaging unit; Dimensions in mm

Strain relief plate ▸ Color ▸ light gray

Mounting type: Snap-on

Suitable for 2-pole male and female headers with levers (2231 and 2721 Series)



2231-532/000-009

Width	Item No.	PU
9 mm	2231-532/000-009	25

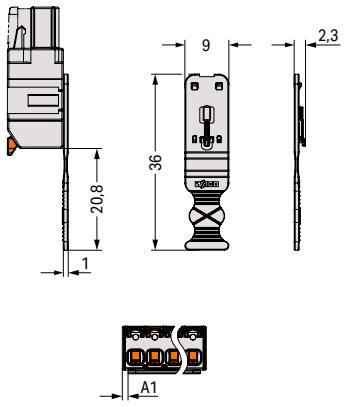

Pole no. 2: A1 = 1.5 mm

Suitable for 3-pole male and female headers with levers (2231 and 2721 Series)



2231-533/000-009

Width	Item No.	PU
14 mm	2231-533/000-009	25

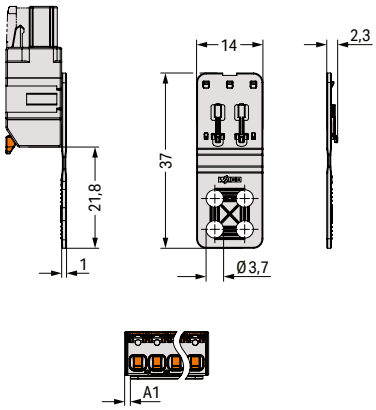

Pole no. 3: A1 = 1.5 mm

Suitable for 4 … 7-pole male and female headers with levers (2231 and 2721 Series)



2231-534/000-009

Width	Item No.	PU
19 mm	2231-534/000-009	25

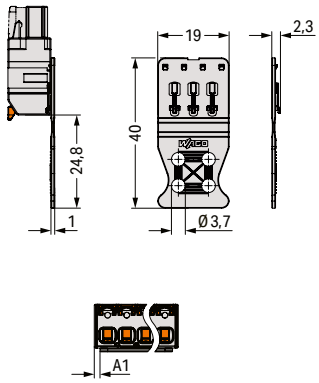

Pole no. 4: A1 = 1.5 mm
Pole no. 5: A1 = 6.5 mm
Pole no. 6: A1 = 6.5 mm
Pole no. 7: A1 = 11.5 mm

8

PU = packaging unit; SPU = subpackaging unit; Dimensions in mm

Strain relief plate ▸ Color ▸ light gray

Mounting type: Snap-on

Suitable for 8 … 11-pole male and female headers with levers (2231 and 2721 Series)



2231-535/000-009

Width	Item No.	PU
39 mm	2231-535/000-009	25

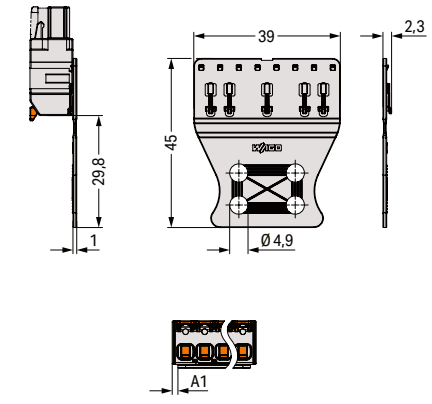

Pole no. 8: A1 = 1.5 mm
Pole no. 9: A1 = 6.5 mm
Pole no. 10: A1 = 6.5 mm
Pole no. 11: A1 = 11.5 mm

Suitable for 12 … 16-pole male and female headers with levers (2231 and 2721 Series)



2231-536/000-009

Width	Item No.	PU
59 mm	2231-536/000-009	25

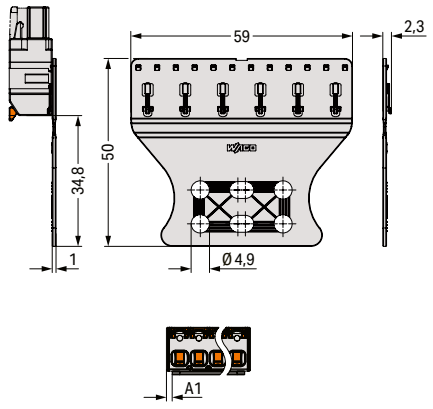

Pole no. 12: A1 = 1.5 mm
Pole no. 13: A1 = 6.5 mm
Pole no. 14: A1 = 6.5 mm
Pole no. 15: A1 = 11.5 mm
Pole no. 16: A1 = 11.5 mm

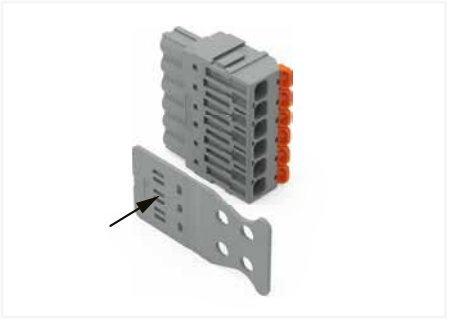

Montage der Zugentlastungsplatte



Zugentlastungsplatte in die Aufnahme einführen und bis zum Anschlag in Leiteranschlussrichtung ziehen.



Zugentlastungsplatte; feldseitig montiert

PU = packaging unit; SPU = subpackaging unit; Dimensions in mm

Strain relief plate ▸ Color ▸ light gray

Mounting type: Insert ▸ Suitable for standard male and female connectors (2.5 mm; 3.5 mm; 5 mm; 7.5 mm pin spacing)



734-129

Width	Item No.	PU (SPU)
6 mm	**734-127**	100 (25)
12.5 mm	**734-128**	100 (25)
25 mm	**734-129**	100 (25)
35 mm	**734-126**	100 (25)
55 mm	**734-426**	50 (25)
75 mm	**734-427**	50 (25)

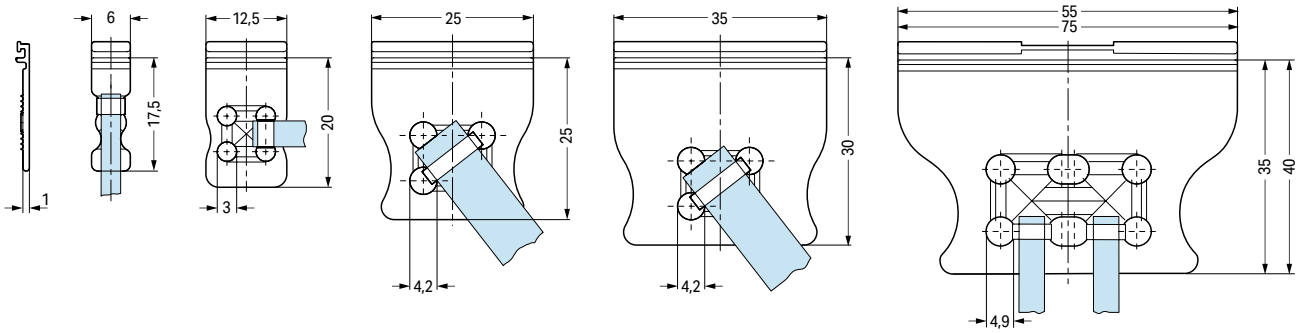

The arrangement of the attachments for cable ties allows single conductors or multi-core cables to be secured in different ways. The width of the cable ties must correspond to the hole dimensions of the strain relief plates shown above.

PU = packaging unit; SPU = subpackaging unit; Dimensions in mm

Strain relief plate ▸ Color ▸ light gray

Mounting type: Insert ▸ Suitable for standard male and female connectors (2.5 mm; 3.5 mm; 5 mm; 7.5 mm pin spacing)

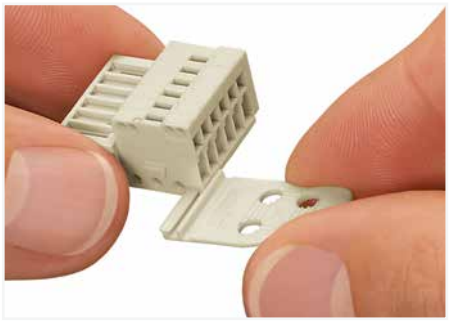

Strain relief plates for factory or in-the-field assembly



Strain relief plate, for factory assembly
1-conductor female connector, 2.5 mm pin spacing, light gray,
12-pole, with strain relief plate
733-112/034-000



Strain relief plate, for factory assembly
1-conductor female connector, 2.5 mm pin spacing, light gray,
2-pole, with strain relief plate (733-102/032-000)

Strain relief housing ▸ Suitable for standard male and female connectors ▸ Color ▸ gray

Pin spacing: 5 mm / 0.197 inches

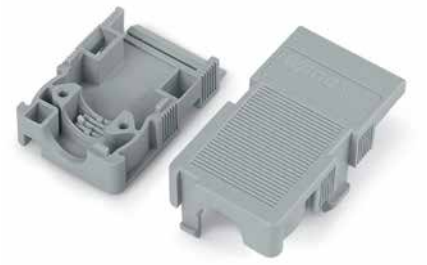

Width	Item No.	PU
13 mm	232-602	25
18 mm	232-603	25
23 mm	232-604	25
28 mm	232-605	25
33 mm	232-606	25
38 mm	232-607	25
43 mm	232-608	25
48 mm	232-609	25
53 mm	232-610	25
63 mm	232-612	25

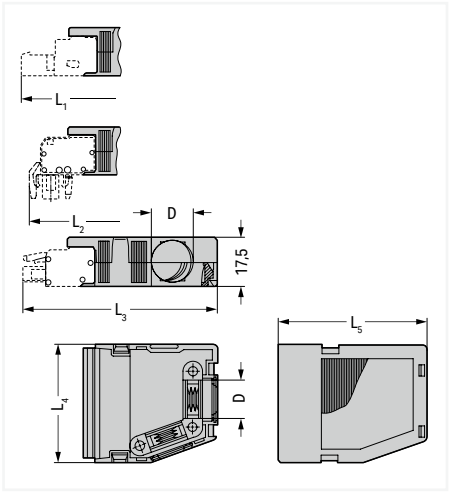

- 2- to 3-pole; only suitable for cable ties; 1 cable outlet (rear side); max. 3.6 mm cable tie width
- 4- to 6-pole; suitable for cable clamp; 1 x cable outlet (rear side)
- 7- to 8-pole; suitable for cable clamp; 1 x cable outlet (rear side) and 1 x cable outlet (side); 1 cover (included)
- 9- to 16-pole; suitable for cable clamp; 1 x cable outlet (rear side) and 2 x cable outlets (side); 2 covers (included)
- Cable ties and binding tools are not offered by WAGO.

Pin spacing: 7.5 mm / 0.295 inches

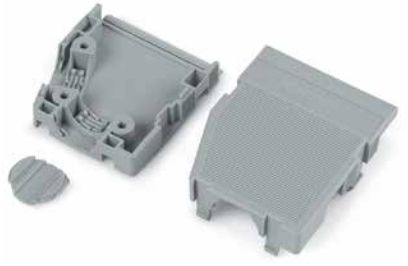

Width	Item No.	PU
15.5 mm	232-662	25
23 mm	232-663	25
30.5 mm	232-664	25
38 mm	232-665	25
53 mm	232-667	25
54 mm	232-670	25

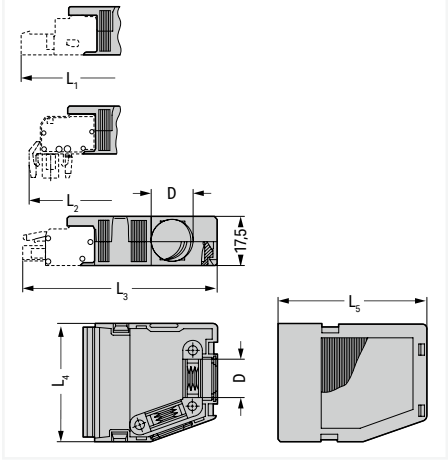

- 2-pole; only suitable for cable ties; 1 cable outlet (rear side), max. cable tie width 3.6 mm;
- 3- to 4-pole; suitable for cable clamp; 1 x cable outlet (rear side);
- 5-pole; suitable for cable clamp; 1 x cable outlet (rear side) and 1 x cable outlets (side); 1 cover (included)
- 7-pole; suitable for cable clamp; 1 x cable outlet (rear side) and 2 x cable outlets (side); 2 covers (included)
- Cable ties and binding tools are not offered by WAGO.



2- to 3-pole; only suitable for cable ties; max. 3.6 mm cable tie width
4- to 16-pole; suitable for cable clamp, covers (included)
Cable ties and binding tools are not offered by WAGO.

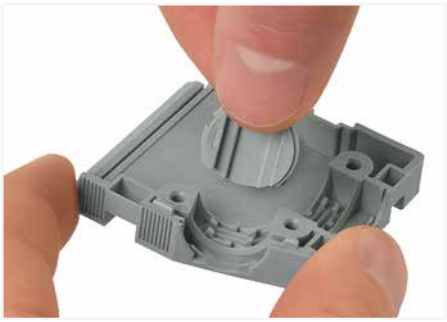

Snapping a cover into the unused cable outlet.



Strain relief housing shown with a male connector equipped with CAGE CLAMP®

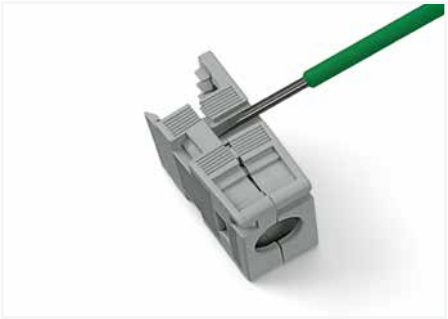

Disassembling a strain relief housing is only possible using an operating tool (e.g., 210-719).

8

PU = packaging unit; SPU = subpackaging unit; Dimensions in mm

Jumper ▸ Jumper bar ▸ Pin spacing: 5/5.08 mm / 0.197/0.2 inches ▸ Suitable: for male and female connectors with CAGE CLAMP® connection ▸ Color: gray



231-902

Pole number	Item No.	PU (SPU)
2	**231-902**	200 (25)
3	**231-903**	100 (25)
5	**231-905**	100 (25)
7	**231-907**	100 (25)
10	**231-910**	100 (25)



Notice: Insert jumper bar according to direction of symbols. □symbol correlates to the direction of the operating slot.



Inserting a comb-style jumper bar via multipole operating tool – with the female or male connector being supported in a suitable holding device.

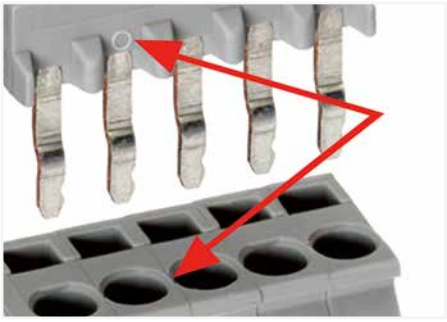

Notice: Insert jumper bar according to direction of symbols. □symbol shows direction to conductor entry.

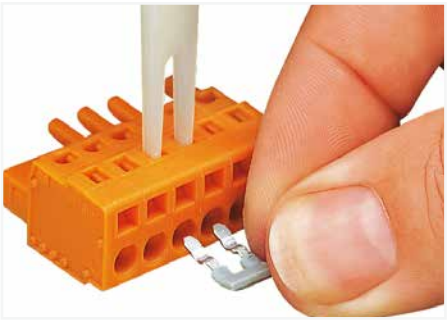

Operating tool for comb-style jumper bars (231-902)



Custom comb-style jumper bars are created by breaking off jumper contacts (3 contacts and more).

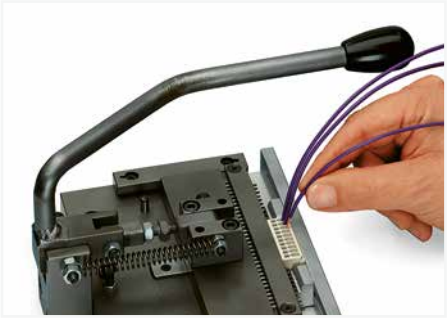

Both male and female connectors can be pre-assembled with comb-style jumper bars upon request.



Notice: Comb-style jumper bars reduce the conductor cross-section to 1.5 mm² "s" + "f-st."

PU = packaging unit; SPU = subpackaging unit

Testing accessories ▸ Test plug adapter ▸ Suitable: for female connectors ▸ Color: light gray



Electrical data				
Ratings per	**IEC/EN 60664-1**			
Overvoltage category	III	III	II	
Pollution degree	3	2	2	
Nominal voltage	-	250 V	-	
Rated impulse withstand voltage	-	4 kV	-	
Rated current	-	12 A	-	
Connection Data				
Connection technology	CAGE CLAMP®			
Strip length	8 … 9 mm / 0.31 … 0.35 inches			
Solid conductor	0.08 … 2.5 mm² / 28 … 12 AWG			
Fine-stranded conductor	0.08 … 2.5 mm² / 28 … 12 AWG			
Material data				
Material group	I			
Insulation material (main housing)	Polyamide (PA66)			
Flammability class per UL94	V0			
Environmental requirements				
Processing temperature	-35 … +60 °C			

8

See technical section for further information

Approvals and corresponding ratings, visit www.wago.com

Testing accessories ▸ Test plug adapter ▸ Suitable: for female connectors ▸ Color: light gray

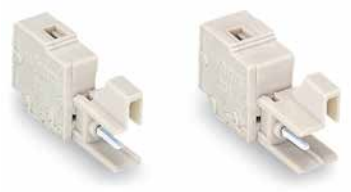

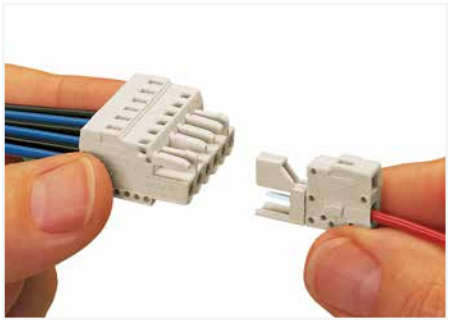

Test plug adapter with CAGE CLAMP® connection

Pin spacing: 5/5.08 mm / 0.197/0.2 inches		
Color	**Item No.**	PU (SPU)
◯ light gray	**231-661**	100 (25)

Pin spacing: 7.5/7.62 mm / 0.295/0.3 inches		
Color	**Item No.**	PU
◯ light gray	**231-662**	100

PU = packaging unit; SPU = subpackaging unit

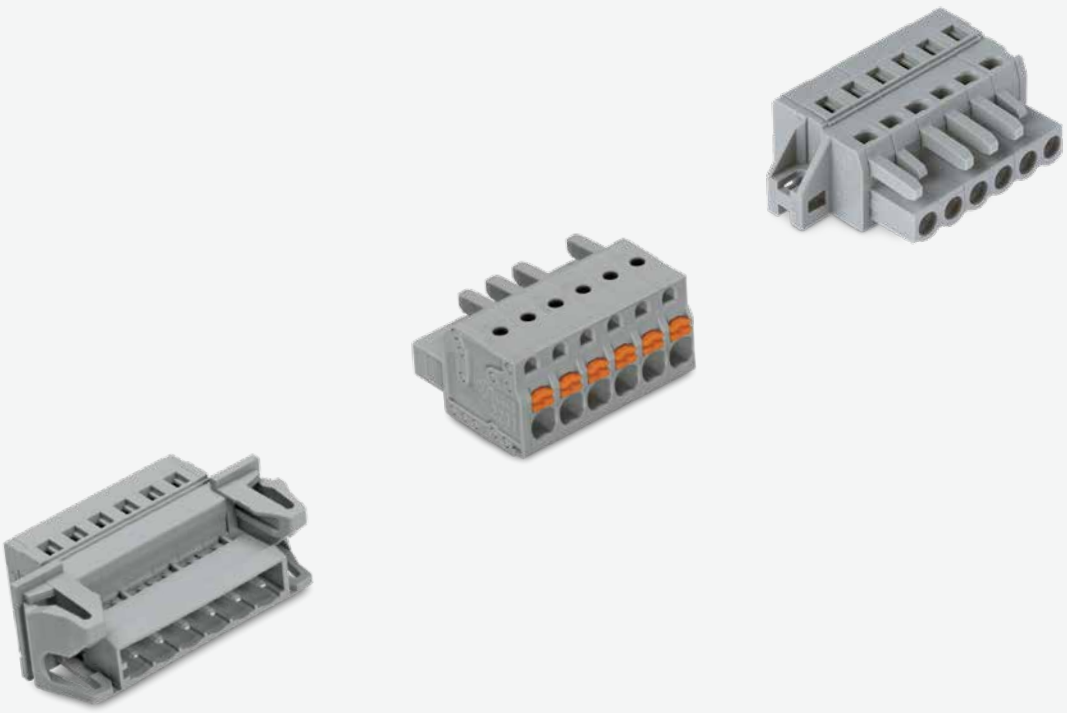

WAGO *MULTI CONNECTION SYSTEM*
MIDI Classic

WAGO *MULTI CONNECTION SYSTEM* MIDI Classic

Pin Spacing: 5/5.08 mm, 7.5/7.62 mm ▸ 2.5 mm²

		Nominal Cross-Section	Page
	*MCS* MIDI Classic 1-Conductor Female Connectors ▸ Actuation type: Operating tool ▸ CAGE CLAMP®	5 mm 5.08 mm 7.5 mm 7.62 mm	658 706 738 780
	*MCS* MIDI Classic 2-Conductor Female Connectors ▸ Actuation type: Operating tool ▸ Push-in CAGE CLAMP®	5 mm 5.08 mm 7.5 mm 7.62 mm	668 712 748 786
	*MCS* MIDI Classic 1-Conductor Female Connectors ▸ Actuation type: Push-button ▸ Push-in CAGE CLAMP®	5 mm 5.08 mm 7.5 mm 7.62 mm	670 716 750 788
	*MCS* MIDI Classic 1-Conductor Female Connectors ▸ Actuation type: Lever ▸ Push-in CAGE CLAMP®	5 mm 7 mm	674 754
	*MCS* MIDI Classic 1-Conductor Male Connectors ▸ Actuation type: Operating tool ▸ CAGE CLAMP®	5 mm 5.08 mm 7.5 mm 7.62 mm	676 720 756 792
	*MCS* MIDI Classic THT Female Headers	5 mm 5.08 mm 7.5 mm 7.62 mm	682 724 760 796
	*MCS* MIDI Classic THT Male Headers	5 mm 5.08 mm 7.5 mm 7.62 mm	686 728 764 800
	*MCS* MIDI THR Male Headers	5 mm 7.5 mm	698 772
	*MCS* MIDI Accessories Accessories and Tools		804 1063
	Application Examples		834

9

MCS **MIDI Classic**
Description and Installation

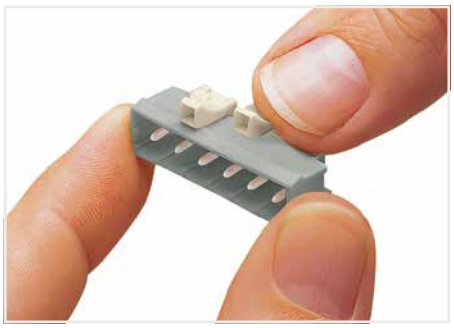

Coding a male header – fitting coding key(s).

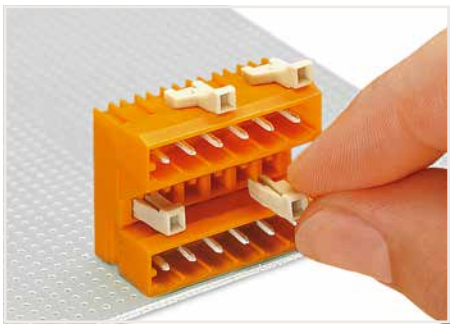

Coding a lower male header – inserting coding key(s).



Coding a female connector – removing coding finger(s).

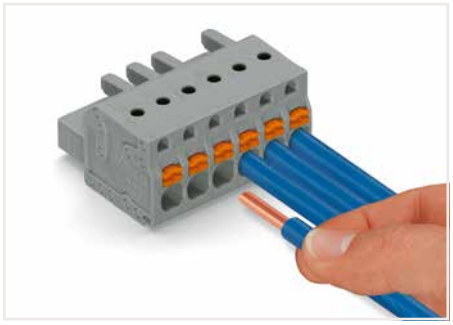

Push-in termination of solid conductors or fine-stranded conductors with ferrule

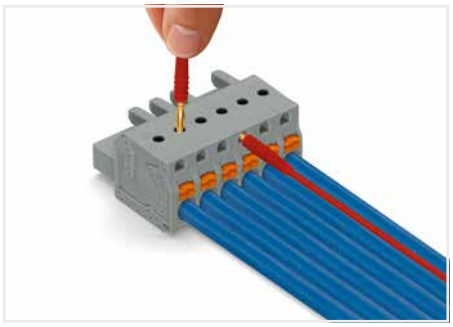

Testing parallel to conductor entry via integrated test ports – female connector with push-buttons and Push-in CAGE CLAMP® connection – touch contact perpendicular to conductor entry.

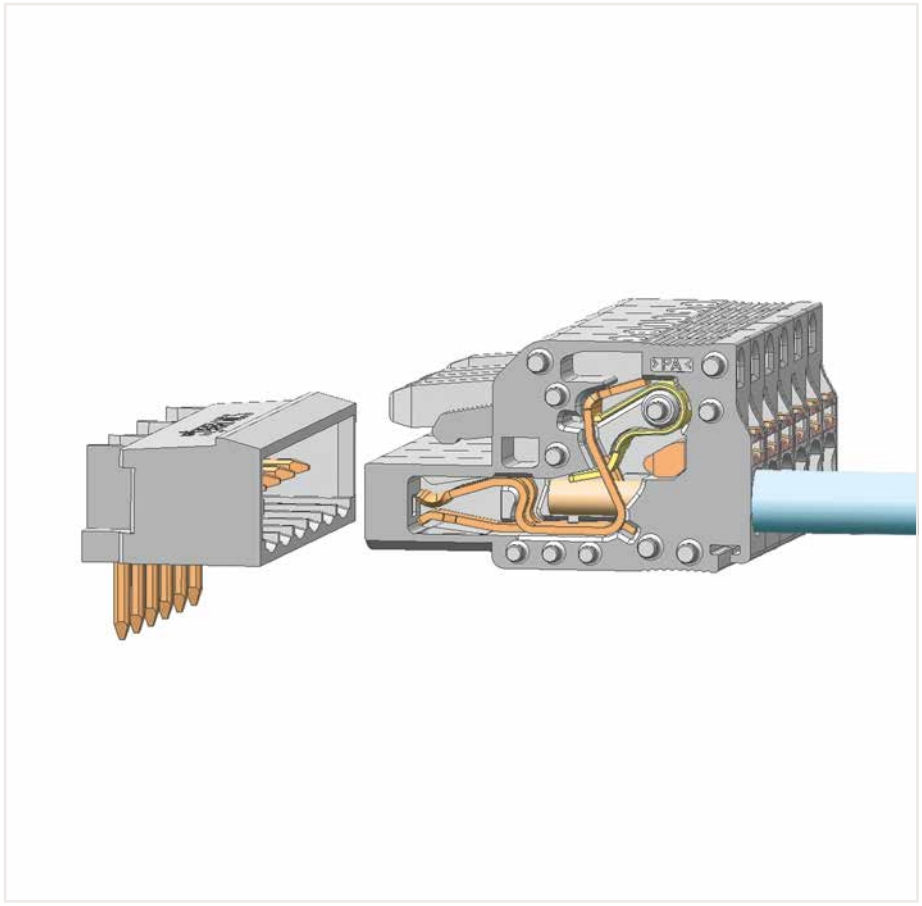

Pin spacing: 5/5.08 mm and 7.5/7.62 mm, Push-in CAGE CLAMP®



Inserting fine-stranded conductors into Push-in CAGE CLAMP® unit via push-buttons.

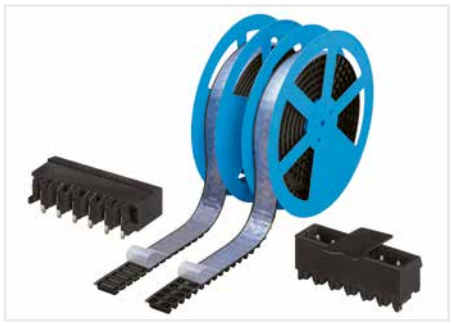

THR male headers in tape-and-reel packaging for SMT applications



Labeling via direct marking or self-adhesive strips.

CAGE CLAMP®

MCS **MIDI Classic**
Description and Installation

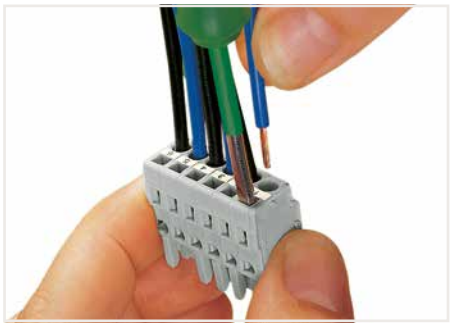

Inserting a conductor via 3.5 mm screwdriver – CAGE CLAMP® actuation parallel to conductor entry.

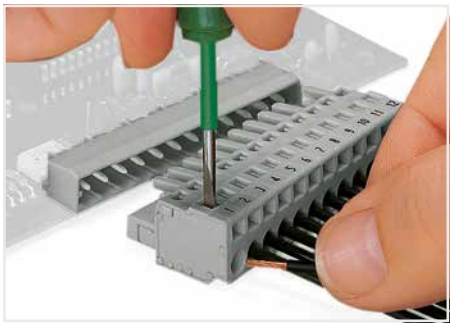

Inserting a conductor via 3.5 mm screwdriver – CAGE CLAMP® actuation perpendicular to conductor entry.



Inserting a conductor into CAGE CLAMP® unit via operating lever (231-291).

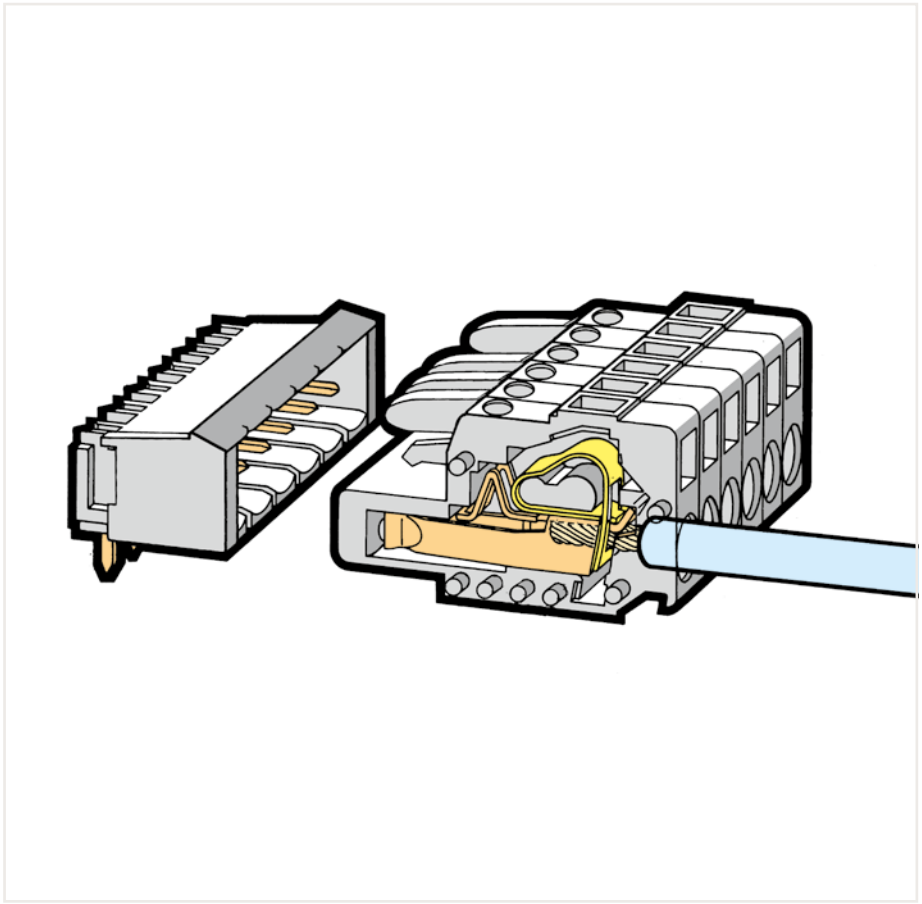

Pin spacing: 5/5.08 mm and 7.5/7.62 mm, CAGE CLAMP®



Inserting a conductor into CAGE CLAMP® unit via operating tool (210-250).

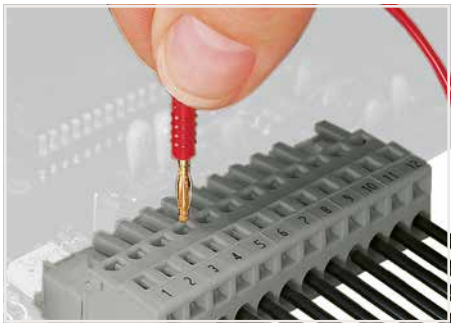

Testing perpendicular to conductor entry via 2 or 2.3 mm Ø test plug – female connector with CAGE CLAMP®.

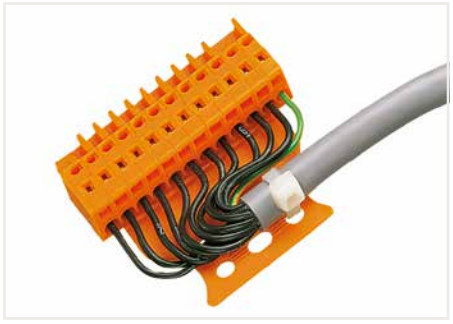

Male connector with strain relief plate



Strain relief housing shown with a male connector equipped with CAGE CLAMP®

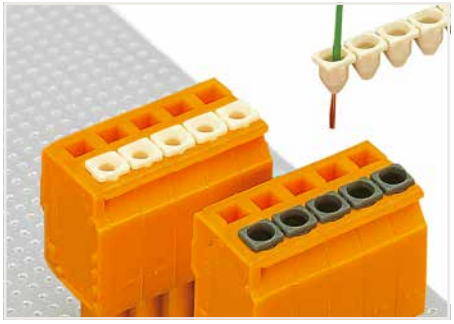

Insulation stop – prevents conductor insulation from being inserted into CAGE CLAMP® and Push-in CAGE CLAMP® units.

1-conductor female connector ▸ *MCS* MIDI Classic ▸ 231 Series

Pin spacing: 5 mm / 0.197 inches ▸ Actuation type: Operating tool ▸ CAGE CLAMP® ▸ Conductor entry direction to mating direction: 0 ° ▸ Color: gray

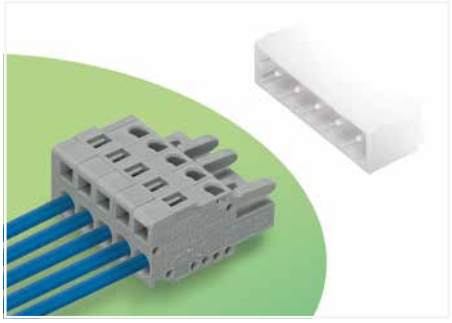

- Universal connection for all conductor types
- Easy cable pre-assembly and on-unit wiring via vertical and horizontal CAGE CLAMP® actuation
- Integrated test ports
- With coding fingers

Derating Curve
1-conductor female connector (231-102/026-000) with THT male header (231-432/001-000)
Pin spacing: 5 mm / Conductor cross-section: 2.5 mm² "f-st"
Based on: EN 60512-5-2 / Reduction factor: 0.8

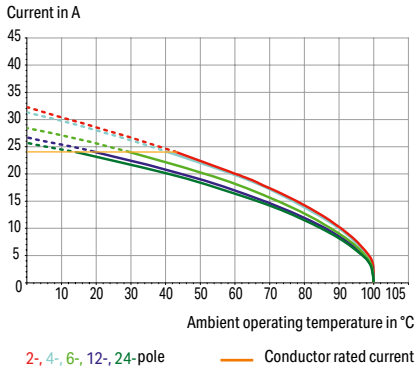

Electrical data			
Ratings per	**IEC/EN 60664-1**		
Overvoltage category	III	III	II
Pollution degree	3	2	2
Nominal voltage	320 V	320 V	630 V
Rated impulse withstand voltage	4 kV	4 kV	4 kV
Rated current	16 A	16 A	16 A
Approvals per	**UL 1059**		
Use group	B	C	D
Rated voltage	300 V	-	300 V
Rated current	15 A	-	10 A
Approvals per	**CSA**		
Use group	B	C	D
Rated voltage	300 V	-	300 V
Rated current	15 A	-	10 A

Connection Data	
Connection technology	CAGE CLAMP®
Strip length	8 … 9 mm / 0.31 … 0.35 inches
Solid conductor	0.08 … 2.5 mm² / 28 … 12 AWG
Fine-stranded conductor	0.08 … 2.5 mm² / 28 … 12 AWG
Fine-stranded conductor; with insulated ferrule	0.25 … 1.5 mm²
Fine-stranded conductor; with uninsulated ferrule	0.25 … 2.5 mm²

Material data	
Material group	I
Insulation material (main housing)	Polyamide (PA66)
Flammability class per UL94	V0
Clamping spring material	Chrome-nickel spring steel (CrNi)
Contact material	Copper alloy
Contact Plating	Tin

Environmental requirements	
Limit temperature range	-60 … +100 °C
Processing temperature	-35 … +60 °C

Note:
The *MCS – MULTI CONNECTION SYSTEM* includes connectors without breaking capacity in accordance with DIN EN 61984. When used as intended, these connectors must not be connected/disconnected when live or under load.When used as intended, these connectors must not be connected/disconnected when live or under load. The circuit design should ensure header pins, which can be touched, are not live when unmated.

Cover	Page 816
Ferrule	Page 1081
Installation	Page 818, 1071
Insulation stop	Page 817
Jumper	Page 830
Marking	Page 1067
Mounting adapter	Page 820
Strain relief	Page 828
Test and measurement	Page 833, 1088
Tool	Page 812
Direct marking	Page 628
Cutout dimensions	Page 632
See technical section for further information	
Approvals and corresponding ratings, visit www.wago.com	

1-conductor female connector ▸ *MCS* MIDI Classic ▸ 231 Series

Pin spacing: 5 mm / 0.197 inches ▸ Actuation type: Operating tool ▸ CAGE CLAMP® ▸ Conductor entry direction to mating direction: 0 ° ▸ Color: gray

Plugging without loss of pin spacing



231-106/026-000

Pole number	Item No.	PU
2	231-102/026-000	100
3	231-103/026-000	100
4	231-104/026-000	100
5	231-105/026-000	100
6	231-106/026-000	50
7	231-107/026-000	50
8	231-108/026-000	50
9	231-109/026-000	50
10	231-110/026-000	50
11	231-111/026-000	25
12	231-112/026-000	25
13	231-113/026-000	25
14	231-114/026-000	25
15	231-115/026-000	25
16	231-116/026-000	25
17	231-117/026-000	25
18	231-118/026-000	25
19	231-119/026-000	10
20	231-120/026-000	10
21	231-121/026-000	10
22	231-122/026-000	10
23	231-123/026-000	10
24	231-124/026-000	10

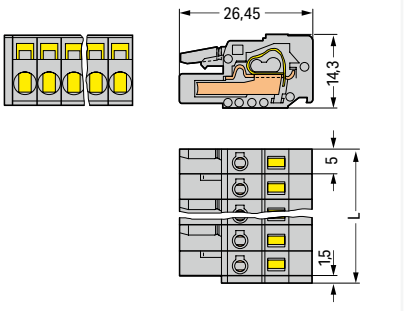

L = (pole no. x pin spacing) + 1.5 mm
2- to 3-pole female connectors – one latch only



231-106/102-000

Pole number	Item No.	PU
2	231-102/102-000	100
3	231-103/102-000	100
4	231-104/102-000	100
5	231-105/102-000	100
6	231-106/102-000	50
7	231-107/102-000	50
8	231-108/102-000	50
9	231-109/102-000	50
10	231-110/102-000	50
11	231-111/102-000	25
12	231-112/102-000	25
13	231-113/102-000	25
14	231-114/102-000	25
15	231-115/102-000	25
16	231-116/102-000	25
17	231-117/102-000	25
18	231-118/102-000	25
19	231-119/102-000	10
20	231-120/102-000	10
21	231-121/102-000	10
22	231-122/102-000	10
23	231-123/102-000	10
24	231-124/102-000	10

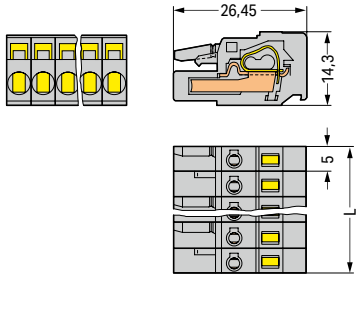

L = pole no. x pin spacing
2- to 3-pole female connectors – one latch only

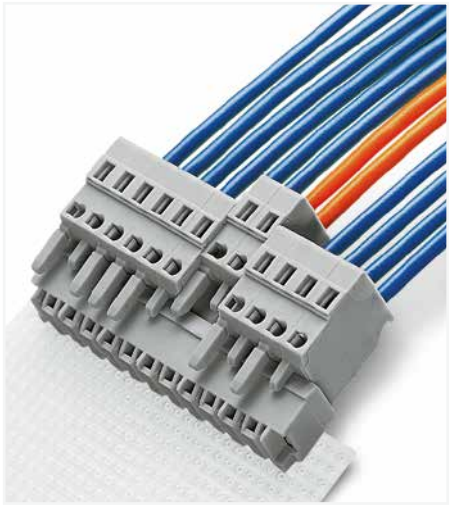

Total pole number for female connectors
= pole number for male header



Female connectors with a built-in end plate require no extra space, while maintaining the nominal cross-section. This means: Total length of female connectors is reduced to "pole no. x pin spacing"!

PU = packaging unit; SPU = subpackaging unit; Dimensions in mm

Variants:

- Gold-plated or partially gold-plated contact surfaces
- Other versions (or variants) can be requested from WAGO Sales or configured at https://configurator.wago.com/.

1-conductor female connector ▸ *MCS* MIDI Classic ▸ 231 Series

Pin spacing: 5 mm / 0.197 inches ▸ Actuation type: Operating tool ▸ CAGE CLAMP® ▸ Conductor entry direction to mating direction: 0 ° ▸ Color: gray

Locking of plug-in connection: Locking lever



231-106/037-000

Pole number	Item No.	PU
2	231-102/037-000	100
3	231-103/037-000	50
4	231-104/037-000	50
5	231-105/037-000	50
6	231-106/037-000	50
7	231-107/037-000	50
8	231-108/037-000	25
9	231-109/037-000	25
10	231-110/037-000	25
11	231-111/037-000	25
12	231-112/037-000	25
13	231-113/037-000	25
14	231-114/037-000	25
15	231-115/037-000	25
16	231-116/037-000	10
17	231-117/037-000	10
18	231-118/037-000	10
19	231-119/037-000	10
20	231-120/037-000	10
21	231-121/037-000	10
22	231-122/037-000	10
23	231-123/037-000	10
24	231-124/037-000	10

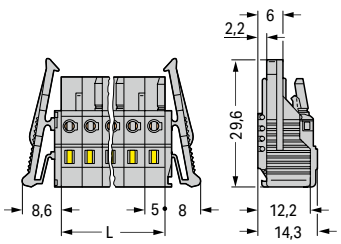

L = pole no. x pin spacing
2- to 3-pole female connectors – one latch only

Mounting type: Panel mounting ▸ Mounting type: Snap-in foot



231-106/008-000

Pole number	Item No.	PU
2	231-102/008-000	100
3	231-103/008-000	100
4	231-104/008-000	100
5	231-105/008-000	100
6	231-106/008-000	50
7	231-107/008-000	25
8	231-108/008-000	50
9	231-109/008-000	50
10	231-110/008-000	50
11	231-111/008-000	25
12	231-112/008-000	25
13	231-113/008-000	25
14	231-114/008-000	25
15	231-115/008-000	25
16	231-116/008-000	25
17	231-117/008-000	25
18	231-118/008-000	25
19	231-119/008-000	10
20	231-120/008-000	10
21	231-121/008-000	10
22	231-122/008-000	10
23	231-123/008-000	10
24	231-124/008-000	10

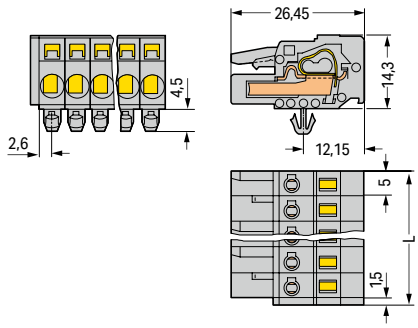

L = (pole no. x pin spacing) + 1.5 mm
2- to 3-pole female connectors – one latch only

Mounting type: Feed-through mounting; Panel mounting ▸ Mounting type: Mounting flange



231-106/031-000

Pole number	Item No.	PU
2	231-102/031-000	100
3	231-103/031-000	50
4	231-104/031-000	50
5	231-105/031-000	50
6	231-106/031-000	50
7	231-107/031-000	50
8	231-108/031-000	50
9	231-109/031-000	25
10	231-110/031-000	25
11	231-111/031-000	25
12	231-112/031-000	25
13	231-113/031-000	25
14	231-114/031-000	25
15	231-115/031-000	25
16	231-116/031-000	10
17	231-117/031-000	10
18	231-118/031-000	10
19	231-119/031-000	10
20	231-120/031-000	10
21	231-121/031-000	10
22	231-122/031-000	10
23	231-123/031-000	10
24	231-124/031-000	10

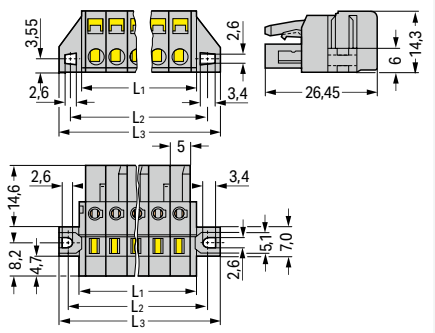

L_1 = (pole no. x pin spacing) + 3 mm
L_2 = (pole no. x pin spacing) + 8.8 mm
L_3 = (pole no. x pin spacing) + 14.8 mm
2- to 3-pole female connectors – one latch only

PU = packaging unit; SPU = subpackaging unit; Dimensions in mm

Variants:
- Gold-plated or partially gold-plated contact surfaces
- Other versions (or variants) can be requested from WAGO Sales or configured at https://configurator.wago.com/.

1-conductor female connector ▸ *MCS* MIDI Classic ▸ 231 Series

Pin spacing: 5 mm / 0.197 inches ▸ Actuation type: Operating tool ▸ CAGE CLAMP® ▸ Conductor entry direction to mating direction: 0 ° ▸ Color: gray

Mounting type: Feed-through mounting; Panel mounting ▸ Mounting type: Mounting flange ▸ with reinforcing strips



231-106/027-000

Pole number	Item No.	PU
6	231-106/027-000	50
7	231-107/027-000	50
8	231-108/027-000	50
9	231-109/027-000	25
10	231-110/027-000	25
11	231-111/027-000	25
12	231-112/027-000	25
13	231-113/027-000	25
14	231-114/027-000	25
15	231-115/027-000	25
16	231-116/027-000	10
17	231-117/027-000	10
18	231-118/027-000	10
19	231-119/027-000	10
20	231-120/027-000	10
21	231-121/027-000	10
23	231-123/027-000	10
24	231-124/027-000	10

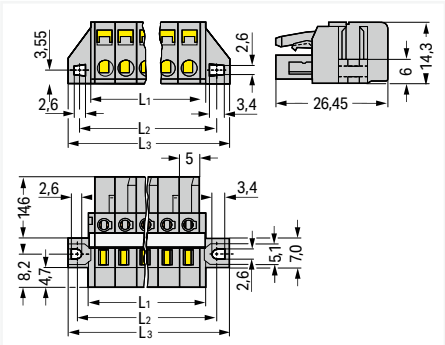

L_1 = (pole no. x pin spacing) + 3 mm
L_2 = (pole no. x pin spacing) + 8.8 mm
L_3 = (pole no. x pin spacing) + 14.8 mm
2- to 3-pole female connectors – one latch only

Mounting type: Feed-through mounting ▸ Mounting type: Snap-in flange



231-107/125-000

Pole number	Item No.	PU
2	231-102/124-000	100
3	231-103/124-000	100
4	231-104/124-000	100
5	231-105/124-000	100
6	231-106/125-000	50
7	231-107/125-000	50
8	231-108/125-000	50
9	231-109/125-000	50
10	231-110/125-000	50
11	231-111/125-000	25
12	231-112/125-000	25
13	231-113/125-000	25
14	231-114/125-000	25
15	231-115/125-000	25
16	231-116/125-000	25
20	231-120/125-000	10

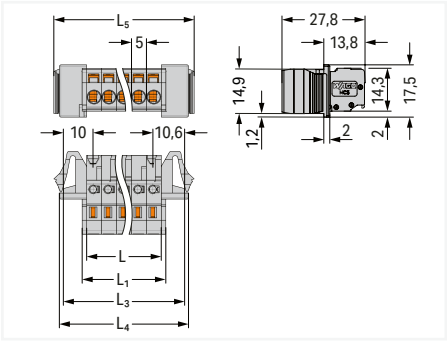

L = pole no. x pin spacing
L1= (pole no. x pin spacing) + 3 mm
L3= (pole no. x pin spacing) + 15.6 mm
L4= (pole no. x pin spacing) + 18.2 mm
L5= (pole no. x pin spacing) + 22 mm
2- to 5-pole female connectors – without reinforcing strips

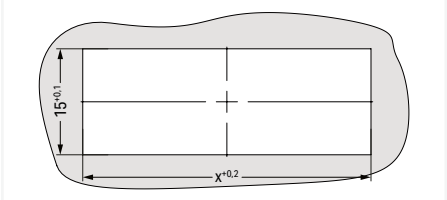

X = (pole no. x pin spacing) + 15.8 mm for 0.5 … 3 mm plate thickness

PU = packaging unit; SPU = subpackaging unit; Dimensions in mm

Variants:
- Gold-plated or partially gold-plated contact surfaces
- Other versions (or variants) can be requested from WAGO Sales or configured at https://configurator.wago.com/.

1-conductor female connector, angled ▸ *MCS* MIDI Classic ▸ 232 Series

Pin spacing: 5 mm / 0.197 inches ▸ Actuation type: Operating tool ▸ CAGE CLAMP® ▸ Color: gray

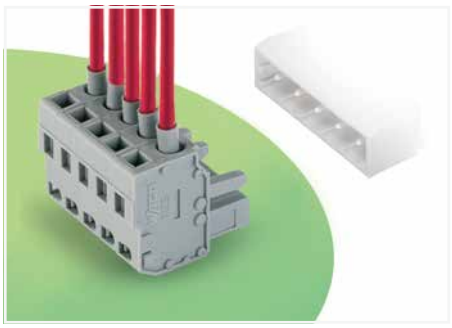

- Universal connection for all conductor types
- Easy cable pre-assembly and on-unit wiring via vertical and horizontal CAGE CLAMP® actuation
- Integrated test ports
- With coding fingers

Derating Curve
1-conductor female connector (231-102/026-000) with THT male header (231-432/001-000)
Pin spacing: 5 mm / Conductor cross-section: 2.5 mm² "f-st"
Based on: EN 60512-5-2 / Reduction factor: 0.8

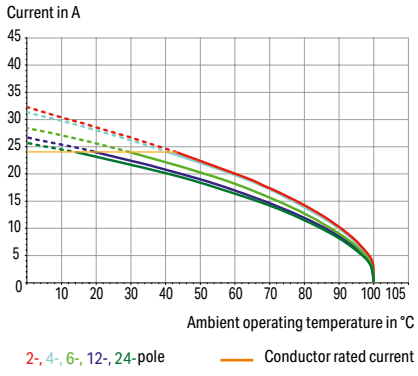

Electrical data			
Ratings per	**IEC/EN 60664-1**		
Overvoltage category	III	III	II
Pollution degree	3	2	2
Nominal voltage	320 V	320 V	630 V
Rated impulse withstand voltage	4 kV	4 kV	4 kV
Rated current	14 A	14 A	14 A
Approvals per	**UL 1059**		
Use group	B	C	D
Rated voltage	300 V	-	300 V
Rated current	15 A	-	10 A
Approvals per	**CSA**		
Use group	B	C	D
Rated voltage	300 V	-	300 V
Rated current	15 A	-	10 A

Connection Data	
Connection technology	CAGE CLAMP®
Strip length	8 … 9 mm / 0.31 … 0.35 inches
Solid conductor	0.08 … 2.5 mm² / 28 … 12 AWG
Fine-stranded conductor	0.08 … 2.5 mm² / 28 … 12 AWG
Fine-stranded conductor; with insulated ferrule	0.25 … 1.5 mm²
Fine-stranded conductor; with uninsulated ferrule	0.25 … 2.5 mm²

Material data	
Material group	I
Insulation material (main housing)	Polyamide (PA66)
Flammability class per UL94	V0
Clamping spring material	Chrome-nickel spring steel (CrNi)
Contact material	Copper alloy
Contact Plating	Tin

Mechanical data	
Design	angled

Environmental requirements	
Limit temperature range	-60 … +85 °C
Processing temperature	-35 … +60 °C

Note:
The *MCS – MULTI CONNECTION SYSTEM* includes connectors without breaking capacity in accordance with DIN EN 61984. When used as intended, these connectors must not be connected/disconnected when live or under load.When used as intended, these connectors must not be connected/disconnected when live or under load. The circuit design should ensure header pins, which can be touched, are not live when unmated.

Cover	Page 816
Ferrule	Page 1081
Insulation stop	Page 817
Jumper	Page 830
Marking	Page 1067
Strain relief	Page 828
Test and measurement	Page 833, 1088
Tool	Page 812
Direct marking	Page 628
See technical section for further information	
Approvals and corresponding ratings, visit www.wago.com	

1-conductor female connector, angled ▸ *MCS* MIDI Classic ▸ 232 Series

Pin spacing: 5 mm / 0.197 inches ▸ Actuation type: Operating tool ▸ CAGE CLAMP® ▸ Color: gray

Conductor entry direction to mating direction: 90 °



232-206/026-000

Pole number	Item No.	PU
2	232-202/026-000	100
3	232-203/026-000	100
4	232-204/026-000	100
5	232-205/026-000	100
6	232-206/026-000	50
7	232-207/026-000	50
8	232-208/026-000	50
9	232-209/026-000	50
10	232-210/026-000	50
11	232-211/026-000	25
12	232-212/026-000	25
13	232-213/026-000	25
14	232-214/026-000	25
15	232-215/026-000	25
16	232-216/026-000	25
17	232-217/026-000	25
18	232-218/026-000	25
19	232-219/026-000	10
20	232-220/026-000	10
21	232-221/026-000	10
22	232-222/026-000	10
23	232-223/026-000	10
24	232-224/026-000	10

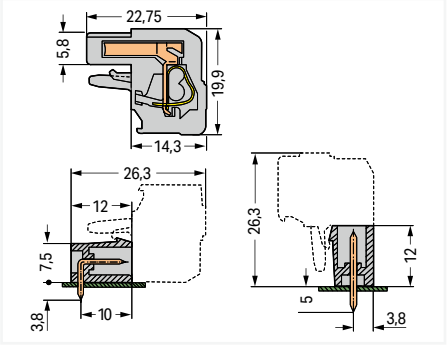

L = (pole no. x pin spacing) + 1.5 mm + 0.9 mm
2- to 3-pole female connectors – one latch only

Conductor entry direction to mating direction: 270 °



232-106/026-000

Pole number	Item No.	PU
2	232-102/026-000	100
3	232-103/026-000	100
4	232-104/026-000	100
5	232-105/026-000	100
6	232-106/026-000	50
7	232-107/026-000	50
8	232-108/026-000	50
9	232-109/026-000	50
10	232-110/026-000	50
11	232-111/026-000	25
12	232-112/026-000	25
13	232-113/026-000	25
14	232-114/026-000	25
15	232-115/026-000	25
16	232-116/026-000	25
17	232-117/026-000	25
18	232-118/026-000	25
19	232-119/026-000	10
20	232-120/026-000	10
21	232-121/026-000	10
22	232-122/026-000	10
23	232-123/026-000	10
24	232-124/026-000	10

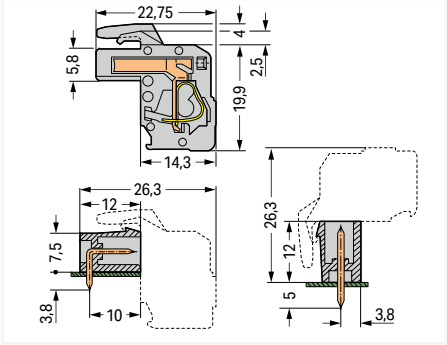

L = (pole no. x pin spacing) + 1.5 mm + 0.9 mm
2- to 3-pole female connectors – one latch only

PU = packaging unit; SPU = subpackaging unit; Dimensions in mm

Variants:

- Gold-plated or partially gold-plated contact surfaces
- Other versions (or variants) can be requested from WAGO Sales or configured at https://configurator.wago.com/.

1-conductor female connector, angled ▸ *MCS* MIDI Classic ▸ 731 Series

Pin spacing: 5 mm / 0.197 inches ▸ Actuation type: Operating tool ▸ CAGE CLAMP® ▸ Conductor entry direction to mating direction: 90 ° ▸ Color: gray

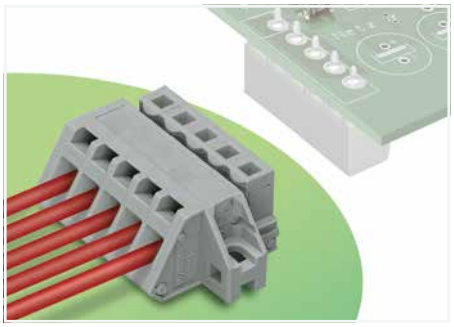

- Universal connection for all conductor types
- Available with snap-in mounting feet or flanges for panel or through-panel mounting
- Mounting adapter allows versions with snap-in mounting feet to be DIN-35 rail mounted
- Easy conductor termination, even when halves are mated

Derating Curve
1-conductor female connector (731-502/031-000) with THT male header (231-132/001-000)
Pin spacing: 5 mm / Conductor cross-section: 2.5 mm² "f-st"
Based on: EN 60512-5-2 / Reduction factor: 0.8

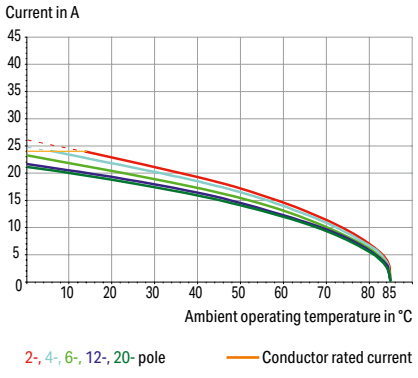

Electrical data			
Ratings per	**IEC/EN 60664-1**		
Overvoltage category	III	III	II
Pollution degree	3	2	2
Nominal voltage	320 V	320 V	630 V
Rated impulse withstand voltage	4 kV	4 kV	4 kV
Rated current	12 A	12 A	12 A
Approvals per	**UL 1059**		
Use group	B	C	D
Rated voltage	300 V	-	300 V
Rated current	15 A	-	10 A
Approvals per	**CSA**		
Use group	B	C	D
Rated voltage	300 V	-	300 V
Rated current	15 A	-	10 A

Connection Data	
Connection technology	CAGE CLAMP®
Strip length	7 … 8 mm / 0.28 … 0.31 inches
Solid conductor	0.08 … 2.5 mm² / 28 … 12 AWG
Fine-stranded conductor	0.08 … 2.5 mm² / 28 … 12 AWG
Fine-stranded conductor; with insulated ferrule	0.25 … 1.5 mm²
Fine-stranded conductor; with uninsulated ferrule	0.25 … 2.5 mm²

Material data	
Material group	I
Insulation material (main housing)	Polyamide (PA66)
Flammability class per UL94	V0
Clamping spring material	Chrome-nickel spring steel (CrNi)
Contact material	Copper alloy
Contact Plating	Tin

Mechanical data	
Design	angled; mountable

Environmental requirements	
Limit temperature range	-60 … +85 °C
Processing temperature	-35 … +60 °C

Note:
The *MCS – MULTI CONNECTION SYSTEM* includes connectors without breaking capacity in accordance with DIN EN 61984. When used as intended, these connectors must not be connected/disconnected when live or under load.When used as intended, these connectors must not be connected/disconnected when live or under load. The circuit design should ensure header pins, which can be touched, are not live when unmated.

Ferrule	Page 1081
Installation	Page 818, 1071
Jumper	Page 830
Marking	Page 1067
Strain relief	Page 828
Test and measurement	Page 833
Tool	Page 812, 1072
Direct marking	Page 628
See technical section for further information	
Approvals and corresponding ratings, visit www.wago.com	

1-conductor female connector, angled ▸ *MCS* MIDI Classic ▸ 731 Series

Pin spacing: 5 mm / 0.197 inches ▸ Actuation type: Operating tool ▸ CAGE CLAMP® ▸ Conductor entry direction to mating direction: 90 ° ▸ Color: gray

Mounting type: Panel mounting ▸ Mounting type: Snap-in foot



731-506/008-000



Angled female connector with DIN-35 rail-mount adapter (209-120)

Pole number	Item No.	PU
2	731-502/008-000	100
3	731-503/008-000	50
4	731-504/008-000	50
5	731-505/008-000	50
6	731-506/008-000	50
7	731-507/008-000	50
8	731-508/008-000	50
9	731-509/008-000	50
10	731-510/008-000	50
11	731-511/008-000	25
12	731-512/008-000	25
13	731-513/008-000	25
14	731-514/008-000	25
15	731-515/008-000	25
16	731-516/008-000	25
17	731-517/008-000	25
18	731-518/008-000	25
19	731-519/008-000	10
20	731-520/008-000	10

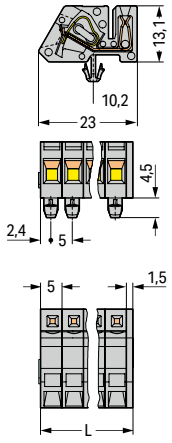

L = (pole no. x pin spacing) + 1.5 mm

PU = packaging unit; SPU = subpackaging unit; Dimensions in mm

Variants:
- Other pole numbers
- Gold-plated or partially gold-plated contact surfaces
- Other versions (or variants) can be requested from WAGO Sales or configured at https://configurator.wago.com/.

1-conductor female connector, angled ▸ *MCS* MIDI Classic ▸ 731 Series

Pin spacing: 5 mm / 0.197 inches ▸ Actuation type: Operating tool ▸ CAGE CLAMP® ▸ Conductor entry direction to mating direction: 90 ° ▸ Color: gray

Mounting type: Feed-through mounting; Panel mounting ▸ Mounting type: Mounting flange



731-506/031-000

Pole number	Item No.	PU
2	731-502/031-000	100
3	731-503/031-000	50
4	731-504/031-000	50
5	731-505/031-000	50
6	731-506/031-000	50
7	731-507/031-000	50
8	731-508/031-000	50
9	731-509/031-000	25
10	731-510/031-000	25
11	731-511/031-000	25
12	731-512/031-000	25
13	731-513/031-000	25
14	731-514/031-000	25
15	731-515/031-000	25
16	731-516/031-000	10
17	731-517/031-000	10
18	731-518/031-000	10
19	731-519/031-000	10
20	731-520/031-000	10

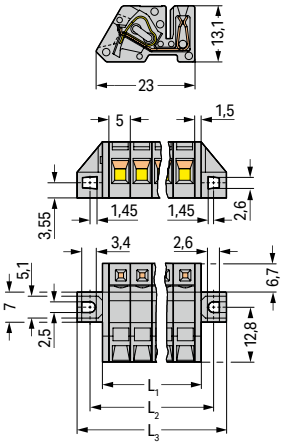

L_1 = (pole no. x pin spacing) + 3 mm
L_2 = (pole no. x pin spacing) + 8.8 mm
L_3 = (pole no. x pin spacing) + 14.8 mm



Angled female connector –
a male header with straight solder pins is used for horizontal PCB mounting in narrow housings.



Angled female connector –
used as through-panel connector; termination ports and operating slots are located outside the housing – panel thickness up to 2 mm.

PU = packaging unit; SPU = subpackaging unit; Dimensions in mm

Variants:
- Other pole numbers
- Gold-plated or partially gold-plated contact surfaces
- Other versions (or variants) can be requested from WAGO Sales or configured at https://configurator.wago.com/.

2-conductor female connector ▸ *MCS* MIDI Classic ▸ 231 Series

Pin spacing: 5 mm / 0.197 inches ▸ Actuation type: Operating tool ▸ Push-in CAGE CLAMP® ▸ Conductor entry direction to mating direction: 0 ° ▸ Color: gray

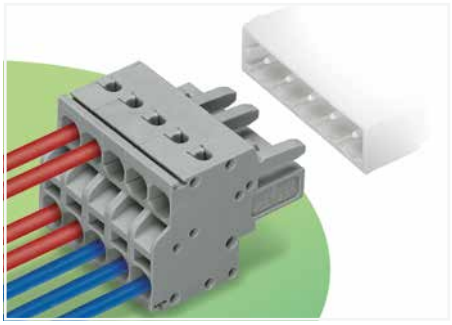

- Universal connection for all conductor types
- Two conductor entries per pole
- For looping through power or data buses
- Bus connection is retained, even when unmated
- Push-in termination of solid and ferruled conductors
- With coding fingers

Derating Curve
2-conductor female connector (231-2102/026-000) with THT male header (231-132/001-000)
Pin spacing: 5 mm / Conductor cross-section: 2.5 mm² "f-st"
Based on: EN 60512-5-2 / Reduction factor: 0.8

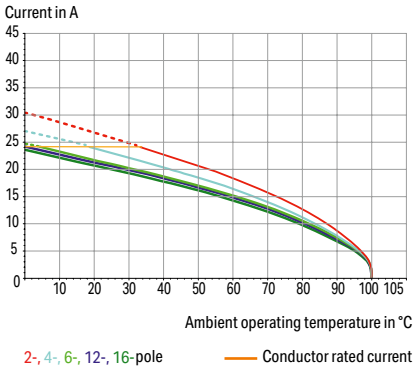

Electrical data			
Ratings per	**IEC/EN 60664-1**		
Overvoltage category	III	III	II
Pollution degree	3	2	2
Nominal voltage	320 V	320 V	630 V
Rated impulse withstand voltage	4 kV	4 kV	4 kV
Rated current	16 A	16 A	16 A
Approvals per	**UL 1059**		
Use group	B	C	D
Rated voltage	300 V	-	300 V
Rated current	20 A	-	10 A
Approvals per	**CSA**		
Use group	B	C	D
Rated voltage	300 V	-	300 V
Rated current	15 A	-	10 A

Connection Data	
Connection technology	Push-in CAGE CLAMP®
Strip length	9 … 10 mm / 0.35 … 0.39 inches
Solid conductor	0.2 … 2.5 mm² / 24 … 12 AWG
Fine-stranded conductor	0.2 … 2.5 mm² / 24 … 12 AWG
Fine-stranded conductor; with insulated ferrule	0.25 … 1.5 mm²
Fine-stranded conductor; with uninsulated ferrule	0.25 … 2.5 mm²

Material data	
Material group	I
Insulation material (main housing)	Polyamide (PA66)
Flammability class per UL94	V0
Clamping spring material	Chrome-nickel spring steel (CrNi)
Contact material	Copper alloy
Contact Plating	Tin

Environmental requirements	
Limit temperature range	-60 … +100 °C
Processing temperature	-35 … +60 °C

Note:
The *MCS – MULTI CONNECTION SYSTEM* includes connectors without breaking capacity in accordance with DIN EN 61984. When used as intended, these connectors must not be connected/disconnected when live or under load.When used as intended, these connectors must not be connected/disconnected when live or under load. The circuit design should ensure header pins, which can be touched, are not live when unmated.

Ferrule	Page 1081
Insulation stop	Page 817
Marking	Page 1067
Strain relief	Page 825
Test and measurement	Page 833
Tool	Page 813, 1072
Direct marking	Page 628
See technical section for further information	
Approvals and corresponding ratings, visit www.wago.com	

2-conductor female connector ▸ *MCS* MIDI Classic ▸ 231 Series

Pin spacing: 5 mm / 0.197 inches ▸ Actuation type: Operating tool ▸ Push-in CAGE CLAMP® ▸ Conductor entry direction to mating direction: 0 ° ▸ Color: gray

Plugging without loss of pin spacing



231-2106/026-000

Pole number	Item No.	PU
2	231-2102/026-000	100
3	231-2103/026-000	100
4	231-2104/026-000	100
5	231-2105/026-000	50
6	231-2106/026-000	50
7	231-2107/026-000	50
8	231-2108/026-000	50
9	231-2109/026-000	50
10	231-2110/026-000	50
11	231-2111/026-000	25
12	231-2112/026-000	25
13	231-2113/026-000	25
14	231-2114/026-000	25
15	231-2115/026-000	25
16	231-2116/026-000	25

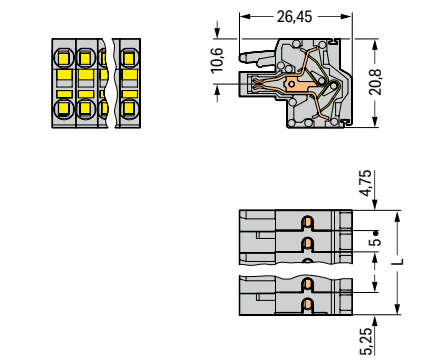

L = (pole no. – 2) x pin spacing + 10 mm

Locking of plug-in connection: Locking lever



231-2106/037-000

Pole number	Item No.	PU (SPU)
2	231-2102/037-000	100
3	231-2103/037-000	50
4	231-2104/037-000	50 (42)
5	231-2105/037-000	50
6	231-2106/037-000	50
7	231-2107/037-000	50
8	231-2108/037-000	25
9	231-2109/037-000	25
10	231-2110/037-000	25
11	231-2111/037-000	25
12	231-2112/037-000	25
13	231-2113/037-000	25
14	231-2114/037-000	25
15	231-2115/037-000	25
16	231-2116/037-000	10

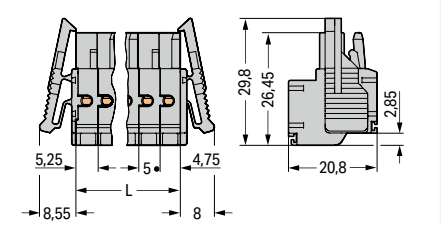

L = (pole no. – 2) x pin spacing + 10 mm

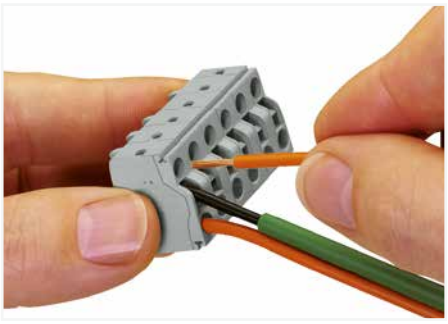

Operating Push-in CAGE CLAMP® is easy, fast and identical to that of CAGE CLAMP®. The screwdriver is fully inserted into the operating slot, holding Push-in CAGE CLAMP® open. After the conductor has been inserted into the clamping unit and the screwdriver been withdrawn, the conductor is clamped safely. Solid and fine-stranded conductors < 0.5 mm² (20 AWG) are terminated and removed using a screwdriver.

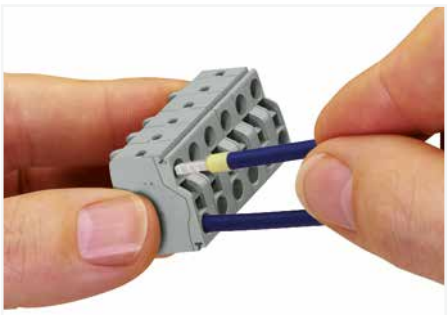

Solid conductors ≥ 0.5 mm² (20 AWG), as well as ferruled, fine-stranded conductors can be terminated by simply pushing them into unit. Integrated test ports allow touch contact with current bar via test probes in both horizontal and vertical directions.

9

PU = packaging unit; SPU = subpackaging unit; Dimensions in mm

Variants:

- Gold-plated or partially gold-plated contact surfaces
- Other versions (or variants) can be requested from WAGO Sales or configured at https://configurator.wago.com/.

1-conductor female connector ▸ *MCS* MIDI Classic ▸ 2231 Series

Pin spacing: 5 mm / 0.197 inches ▸ Actuation type: Push-button ▸ Push-in CAGE CLAMP® ▸ Conductor entry direction to mating direction: 0 ° ▸ Color: gray

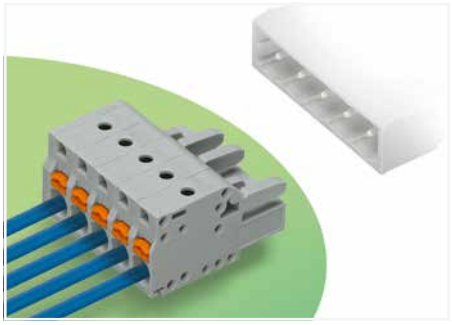

- Universal connection for all conductor types
- Easy-to-use design does not require specialty tools
- Ability to wire while mated
- Push-in termination of solid and ferruled conductors
- Integrated test ports for testing parallel to the conductor entry
- Coding option available

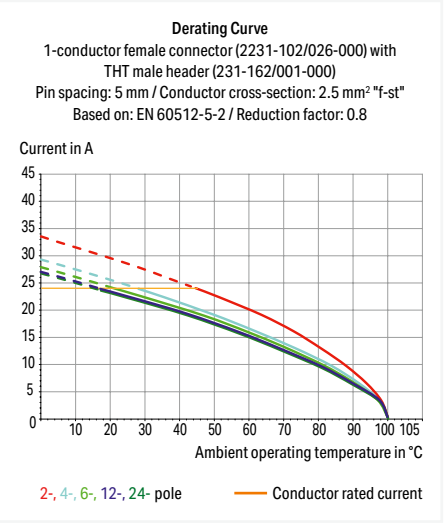

Electrical data			
Ratings per	**IEC/EN 60664-1**		
Overvoltage category	III	III	II
Pollution degree	3	2	2
Nominal voltage	320 V	320 V	630 V
Rated impulse withstand voltage	4 kV	4 kV	4 kV
Rated current	16 A	16 A	16 A
Approvals per	**UL 1059**		
Use group	B	C	D
Rated voltage	300 V	150 V	300 V
Rated current	15 A	15 A	10 A
Approvals per	**CSA**		
Use group	B	C	D
Rated voltage	300 V	150 V	300 V
Rated current	15 A	15 A	10 A

Connection Data	
Connection technology	Push-in CAGE CLAMP®
Strip length	10 … 11 mm / 0.39 … 0.43 inches
Solid conductor	0.2 … 2.5 mm² / 24 … 12 AWG
Fine-stranded conductor	0.2 … 2.5 mm² / 24 … 12 AWG
Fine-stranded conductor; with insulated ferrule	0.25 … 1.5 mm²
Fine-stranded conductor; with uninsulated ferrule	0.25 … 2.5 mm²

Material data	
Material group	I
Insulation material (main housing)	Polyamide (PA66)
Flammability class per UL94	V0
Clamping spring material	Chrome-nickel spring steel (CrNi)
Contact material	Copper alloy
Contact Plating	Tin

Environmental requirements	
Limit temperature range	-60 … +100 °C
Processing temperature	-35 … +60 °C

Note:
The *MCS – MULTI CONNECTION SYSTEM* includes connectors without breaking capacity in accordance with DIN EN 61984. When used as intended, these connectors must not be connected/disconnected when live or under load.When used as intended, these connectors must not be connected/disconnected when live or under load. The circuit design should ensure header pins, which can be touched, are not live when unmated.

Ferrule	Page 1081
Installation	Page 818, 1071
Insulation stop	Page 817
Marking	Page 1067
Mounting adapter	Page 820
Strain relief	Page 825
Test and measurement	Page 833, 1088
Tool	Page 1072
Direct marking	Page 628
Cutout dimensions	Page 632
See technical section for further information	
Approvals and corresponding ratings, visit www.wago.com	

1-conductor female connector ▸ *MCS* MIDI Classic ▸ 2231 Series

Pin spacing: 5 mm / 0.197 inches ▸ Actuation type: Push-button ▸ Push-in CAGE CLAMP® ▸ Conductor entry direction to mating direction: 0 ° ▸ Color: gray

Plugging without loss of pin spacing





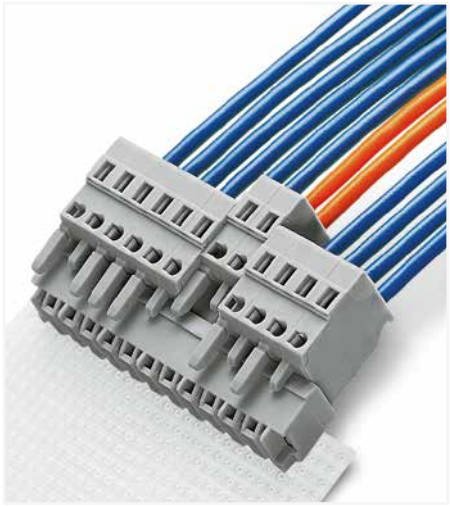

Total pole number for female connectors
= pole number for male header



Female connectors with a built-in end plate require no extra space, while maintaining the nominal cross-section. This means: Total length of female connectors is reduced to "pole no. x pin spacing"!

2231-106/026-000

Pole number	Item No.	PU (SPU)
2	2231-102/026-000	100
3	2231-103/026-000	100
4	2231-104/026-000	100
5	2231-105/026-000	100
6	2231-106/026-000	50
7	2231-107/026-000	50 (10)
8	2231-108/026-000	50
9	2231-109/026-000	50
10	2231-110/026-000	50
11	2231-111/026-000	25
12	2231-112/026-000	25
13	2231-113/026-000	25
14	2231-114/026-000	25
15	2231-115/026-000	25
16	2231-116/026-000	25
17	2231-117/026-000	25
18	2231-118/026-000	25
19	2231-119/026-000	10
20	2231-120/026-000	10
21	2231-121/026-000	10
22	2231-122/026-000	10
23	2231-123/026-000	10
24	2231-124/026-000	10

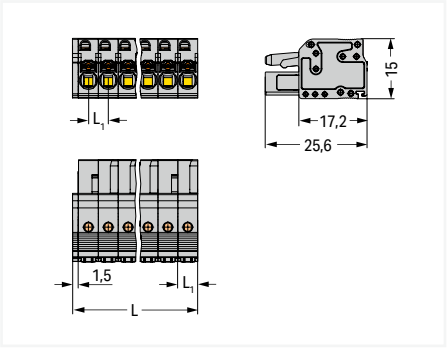

L = (pole no. x pin spacing) + 1.5 mm
L_1 = 5 mm
2- to 3-pole female connectors – one latch only

2231-106/102-000

Pole number	Item No.	PU
2	2231-102/102-000	100
3	2231-103/102-000	100
4	2231-104/102-000	100
5	2231-105/102-000	100
6	2231-106/102-000	50
7	2231-107/102-000	50
8	2231-108/102-000	50
9	2231-109/102-000	50
10	2231-110/102-000	50
11	2231-111/102-000	25
12	2231-112/102-000	25
13	2231-113/102-000	25
14	2231-114/102-000	25
15	2231-115/102-000	25
16	2231-116/102-000	25
17	2231-117/102-000	25
18	2231-118/102-000	25
19	2231-119/102-000	10
20	2231-120/102-000	10
21	2231-121/102-000	10
22	2231-122/102-000	10
23	2231-123/102-000	10
24	2231-124/102-000	10

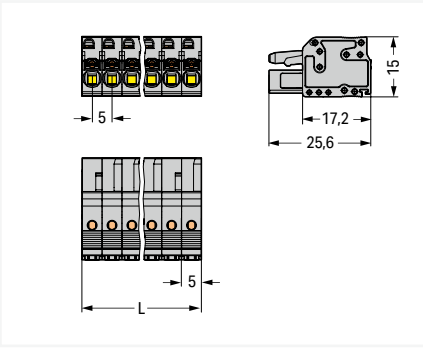

L = pole no. x pin spacing
2- to 3-pole female connectors – one latch only

PU = packaging unit; SPU = subpackaging unit; Dimensions in mm

Variants:

- Gold-plated or partially gold-plated contact surfaces
- Other versions (or variants) can be requested from WAGO Sales or configured at https://configurator.wago.com/.

1-conductor female connector ▸ *MCS* MIDI Classic ▸ 2231 Series

Pin spacing: 5 mm / 0.197 inches ▸ Actuation type: Push-button ▸ Push-in CAGE CLAMP® ▸ Conductor entry direction to mating direction: 0 ° ▸ Color: gray

Locking of plug-in connection: Locking lever



2231-106/037-000

Pole number	Item No.	PU
2	2231-102/037-000	100
3	2231-103/037-000	50
4	2231-104/037-000	50
5	2231-105/037-000	50
6	2231-106/037-000	50
7	2231-107/037-000	50
8	2231-108/037-000	25
9	2231-109/037-000	25
10	2231-110/037-000	25
11	2231-111/037-000	25
12	2231-112/037-000	25
13	2231-113/037-000	25
14	2231-114/037-000	25
15	2231-115/037-000	25
16	2231-116/037-000	10
17	2231-117/037-000	10
18	2231-118/037-000	10
19	2231-119/037-000	10
20	2231-120/037-000	10
21	2231-121/037-000	10
22	2231-122/037-000	10
23	2231-123/037-000	10
24	2231-124/037-000	10

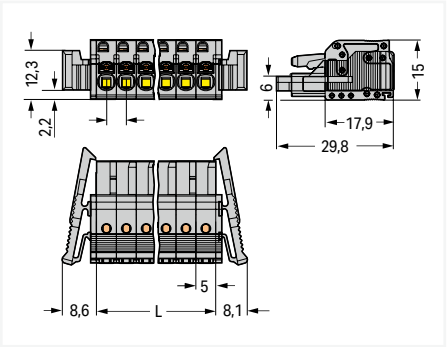

L = pole no. x pin spacing
2- to 3-pole female connectors – one latch only

Mounting type: Panel mounting ▸ Mounting type: Snap-in foot



2231-106/008-000

Pole number	Item No.	PU
2	2231-102/008-000	100
3	2231-103/008-000	100
4	2231-104/008-000	100
5	2231-105/008-000	100
6	2231-106/008-000	50
7	2231-107/008-000	25
8	2231-108/008-000	50
9	2231-109/008-000	50
10	2231-110/008-000	50
11	2231-111/008-000	25
12	2231-112/008-000	25
13	2231-113/008-000	25
14	2231-114/008-000	25
15	2231-115/008-000	25
16	2231-116/008-000	25
17	2231-117/008-000	25
18	2231-118/008-000	25
19	2231-119/008-000	10
20	2231-120/008-000	10
21	2231-121/008-000	10
22	2231-122/008-000	10
23	2231-123/008-000	10
24	2231-124/008-000	10

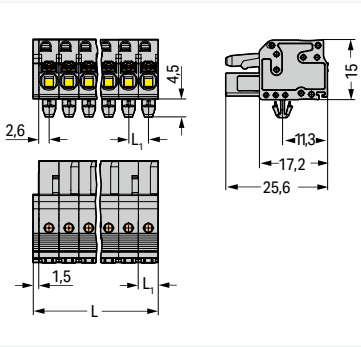

L = (pole no. x pin spacing) + 1.5 mm
L_1 = 5 mm
2- to 3-pole female connectors – one latch only

Mounting type: Feed-through mounting; Panel mounting ▸ Mounting type: Mounting flange



2231-106/031-000

Pole number	Item No.	PU
2	2231-102/031-000	100
3	2231-103/031-000	50
4	2231-104/031-000	50
5	2231-105/031-000	50
6	2231-106/031-000	50
7	2231-107/031-000	50
8	2231-108/031-000	50
9	2231-109/031-000	25
10	2231-110/031-000	25
11	2231-111/031-000	25
12	2231-112/031-000	25
13	2231-113/031-000	25
14	2231-114/031-000	25
15	2231-115/031-000	25
16	2231-116/031-000	10
17	2231-117/031-000	10
18	2231-118/031-000	10
19	2231-119/031-000	10
20	2231-120/031-000	10
21	2231-121/031-000	10
22	2231-122/031-000	10
23	2231-123/031-000	10
24	2231-124/031-000	10

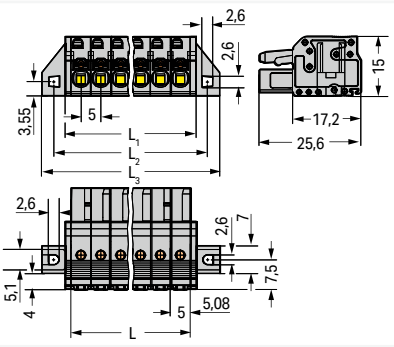

L = pole no. x pin spacing
L_1 = L + 2.8 mm
L_2 = L + 8.8 mm
L_3 = L + 14.8 mm
2- to 3-pole female connectors – one latch only

PU = packaging unit; SPU = subpackaging unit; Dimensions in mm

Variants:
- Gold-plated or partially gold-plated contact surfaces
- Other versions (or variants) can be requested from WAGO Sales or configured at https://configurator.wago.com/.

1-conductor female connector ▸ *MCS* MIDI Classic ▸ 2231 Series

Pin spacing: 5 mm / 0.197 inches ▸ Actuation type: Lever ▸ Push-in CAGE CLAMP® ▸ Conductor entry direction to mating direction: 0 ° ▸ Color: gray



- Intuitive and tool-free lever actuation
- Universal connection for all conductor types
- Push-in termination of solid and ferruled conductors
- Just 11.5 mm tall
- Test slot 0° and 90° to conductor entry
- Codable

Electrical data			
Ratings per	**IEC/EN 60664-1**		
Overvoltage category	III	III	II
Pollution degree	3	2	2
Nominal voltage	320 V	320 V	630 V
Rated impulse withstand voltage	4 kV	4 kV	4 kV
Rated current	16 A	16 A	16 A
Approvals per	**UL 1059**		
Use group	B	C	D
Rated voltage	300 V	150 V	300 V
Rated current	20 A	15 A	10 A
Approvals per	**CSA**		
Use group	B	C	D
Rated voltage	300 V	150 V	300 V
Rated current	20 A	15 A	10 A

Connection Data	
Connection technology	Push-in CAGE CLAMP®
Strip length	11 … 12 mm / 0.43 … 0.47 inches
Solid conductor	0.2 … 2.5 mm² / 24 … 12 AWG
Fine-stranded conductor	0.2 … 2.5 mm² / 24 … 12 AWG
Fine-stranded conductor; with insulated ferrule	0.25 … 1.5 mm²
Fine-stranded conductor; with uninsulated ferrule	0.25 … 2.5 mm²

Material data	
Material group	I
Insulation material (main housing)	Polyamide (PA66)
Flammability class per UL94	V0
Clamping spring material	Chrome-nickel spring steel (CrNi)
Contact material	Copper alloy
Contact Plating	Tin

Environmental requirements	
Limit temperature range	-60 … +100 °C
Processing temperature	-35 … +60 °C

Note:
The *MCS – MULTI CONNECTION SYSTEM* includes connectors without breaking capacity in accordance with DIN EN 61984. When used as intended, these connectors must not be connected/disconnected when live or under load.When used as intended, these connectors must not be connected/disconnected when live or under load. The circuit design should ensure header pins, which can be touched, are not live when unmated.

Coding	Page 814
Insulation stop	Page 817
Locking system	Page 821
Marking	Page 1067
Strain relief	Page 823
Test and measurement	Page 833, 1088
Tool	Page 1072

See technical section for further information

Approvals and corresponding ratings, visit www.wago.com

1-conductor female connector ▸ *MCS* MIDI Classic ▸ 2231 Series

Pin spacing: 5 mm / 0.197 inches ▸ Actuation type: Lever ▸ Push-in CAGE CLAMP® ▸ Conductor entry direction to mating direction: 0 ° ▸ Color: gray



2231-1106/327-000

Pole number	Item No.	PU
2	2231-1102/327-000	100
3	2231-1103/327-000	100
4	2231-1104/327-000	100
5	2231-1105/327-000	50
6	2231-1106/327-000	50
7	2231-1107/327-000	50
8	2231-1108/327-000	50
10	2231-1110/327-000	50
12	2231-1112/327-000	25
16	2231-1116/327-000	25

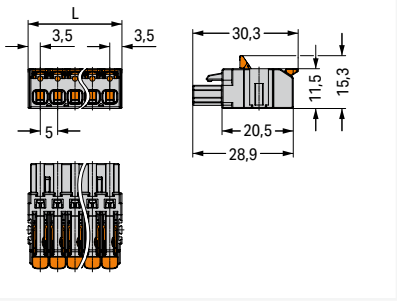

L = (pole no. x pin spacing) + 2 mm
2- and 3-pole female connectors – one latch only

Locking of plug-in connection: Lateral locking lever



2231-1106/038-000

Pole number	Item No.	PU
2	2231-1102/038-000	100
3	2231-1103/038-000	100
4	2231-1104/038-000	50
5	2231-1105/038-000	50
6	2231-1106/038-000	50
7	2231-1107/038-000	50
8	2231-1108/038-000	50
10	2231-1110/038-000	50
12	2231-1112/038-000	25
16	2231-1116/038-000	25

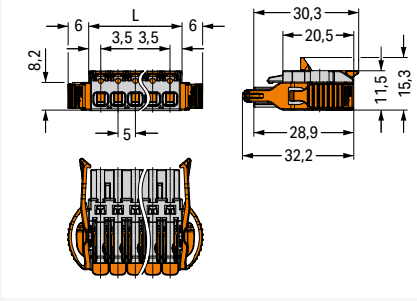

L = (pole no. x pin spacing) + 2 mm
2- and 3-pole female connectors – one latch only

Locking of plug-in connection: Center locking lever



2231-1106/328-000

Pole number	Item No.	PU
3	2231-1103/328-000	100
4	2231-1104/328-000	100
5	2231-1105/328-000	50
6	2231-1106/328-000	50
7	2231-1107/328-000	50
8	2231-1108/328-000	50
12	2231-1112/329-000	25
16	2231-1116/329-000	25

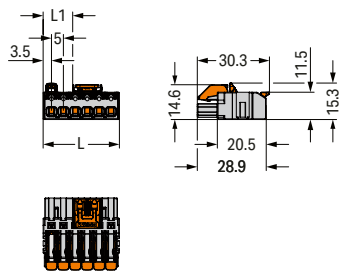

Pole no.	L	L1
5	27	7.4
6	32	12.4
7	37	12.4
8	42	17.4
10	52	22.4
12	62	27.4
16	82	37.4

PU = packaging unit; SPU = subpackaging unit; Dimensions in mm

Variants:
- Other pole numbers
- Other versions (or variants) can be requested from WAGO Sales or configured at https://configurator.wago.com/.

1-conductor male connector ▸ *MCS* MIDI Classic ▸ 231 Series

Pin spacing: 5 mm / 0.197 inches ▸ Actuation type: Operating tool ▸ CAGE CLAMP® ▸ Conductor entry direction to mating direction: 0 ° ▸ Color: gray

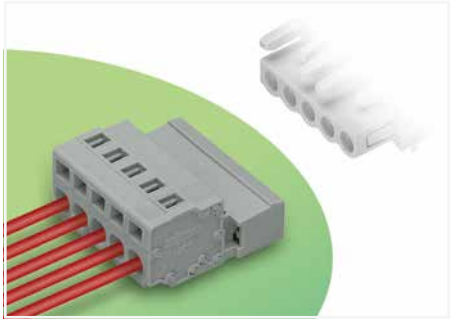

- Universal connection for all conductor types
- Easy cable pre-assembly and on-unit wiring via vertical and horizontal CAGE CLAMP® actuation
- For wire-to-wire and board-to-wire connections
- Versions available with snap-in mounting feet or flanges for panel or through-panel mounting
- With coding fingers

Derating Curve
1-conductor female connector (231-102/026-000) with 1-conductor male header (231-602)
Pin spacing: 5 mm / Conductor cross-section: 2.5 mm² "f-st"
Based on: EN 60512-5-2 / Reduction factor: 0.8

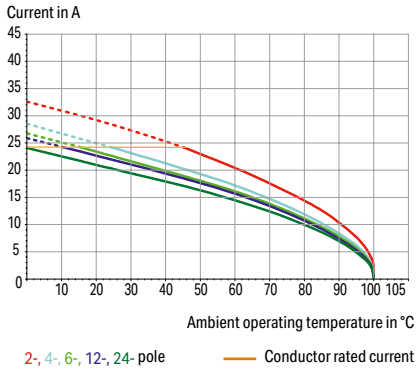

Electrical data			
Ratings per	**IEC/EN 60664-1**		
Overvoltage category	III	III	II
Pollution degree	3	2	2
Nominal voltage	320 V	320 V	630 V
Rated impulse withstand voltage	4 kV	4 kV	4 kV
Rated current	12 A	12 A	12 A
Approvals per	**UL 1059**		
Use group	B	C	D
Rated voltage	300 V	-	300 V
Rated current	15 A	-	10 A
Approvals per	**CSA**		
Use group	B	C	D
Rated voltage	300 V	-	300 V
Rated current	15 A	-	10 A

Connection Data	
Connection technology	CAGE CLAMP®
Strip length	8 … 9 mm / 0.31 … 0.35 inches
Solid conductor	0.08 … 2.5 mm² / 28 … 12 AWG
Fine-stranded conductor	0.08 … 2.5 mm² / 28 … 12 AWG
Fine-stranded conductor; with insulated ferrule	0.25 … 1.5 mm²
Fine-stranded conductor; with uninsulated ferrule	0.25 … 2.5 mm²

Material data	
Material group	I
Insulation material (main housing)	Polyamide (PA66)
Flammability class per UL94	V0
Clamping spring material	Chrome-nickel spring steel (CrNi)
Contact material	Electrolytic copper (E_{Cu})
Contact Plating	Tin

Environmental requirements	
Limit temperature range	-60 … +100 °C
Processing temperature	-35 … +60 °C

Note:
The *MCS – MULTI CONNECTION SYSTEM* includes connectors without breaking capacity in accordance with DIN EN 61984. When used as intended, these connectors must not be connected/disconnected when live or under load.When used as intended, these connectors must not be connected/disconnected when live or under load. The circuit design should ensure header pins, which can be touched, are not live when unmated.

Coding	Page 814
Cover	Page 816
Ferrule	Page 1081
Installation	Page 818, 1071
Insulation stop	Page 817
Jumper	Page 830
Marking	Page 1067
Mounting adapter	Page 820
Strain relief	Page 828
Tool	Page 812, 1072
Direct marking	Page 628
Cutout dimensions	Page 632
See technical section for further information	
Approvals and corresponding ratings, visit www.wago.com	

1-conductor male connector ▸ *MCS* MIDI Classic ▸ 231 Series

Pin spacing: 5 mm / 0.197 inches ▸ Actuation type: Operating tool ▸ CAGE CLAMP® ▸ Conductor entry direction to mating direction: 0 ° ▸ Color: gray



231-606

Pole number	Item No.	PU
2	231-602	100
3	231-603	100
4	231-604	100
5	231-605	50
6	231-606	50
7	231-607	50
8	231-608	50
9	231-609	50
10	231-610	50
11	231-611	25
12	231-612	25
13	231-613	25
14	231-614	25
15	231-615	25
16	231-616	25
17	231-617	25
18	231-618	25
19	231-619	10
20	231-620	10
21	231-621	10
22	231-622	10
23	231-623	10
24	231-624	10

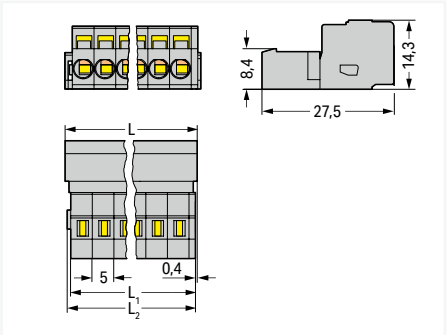

L = (pole no. – 1) x pin spacing + 8.2 mm
L_1 = L – 1.7 mm
L_2 = L – 1.2 mm

Mounting type: Panel mounting ▸ Mounting type: Snap-in foot



231-606/018-000

Pole number	Item No.	PU
2	231-602/018-000	100
3	231-603/018-000	100
4	231-604/018-000	100
5	231-605/018-000	50
6	231-606/018-000	50
7	231-607/018-000	50
8	231-608/018-000	50
9	231-609/018-000	50
10	231-610/018-000	50
11	231-611/018-000	25
12	231-612/018-000	25
13	231-613/018-000	25
14	231-614/018-000	25
15	231-615/018-000	25
16	231-616/018-000	25
17	231-617/018-000	25
18	231-618/018-000	25
19	231-619/018-000	10
20	231-620/018-000	10
21	231-621/018-000	10
22	231-622/018-000	10
23	231-623/018-000	10
24	231-624/018-000	10

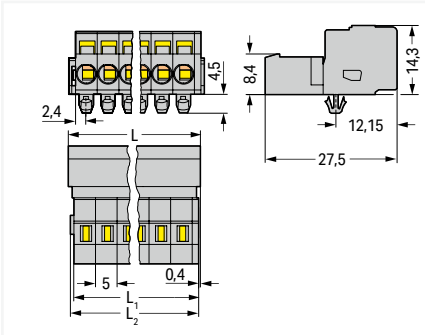

L = (pole no. – 1) x pin spacing + 8.2 mm
L_1 = L – 1.7 mm
L_2 = L – 1.2 mm

Mounting type: Feed-through mounting; Panel mounting ▸ Mounting type: Mounting flange



231-606/019-000

Pole number	Item No.	PU
2	231-602/019-000	100
3	231-603/019-000	50
4	231-604/019-000	50
5	231-605/019-000	50
6	231-606/019-000	50
7	231-607/019-000	50
8	231-608/019-000	50
9	231-609/019-000	25
10	231-610/019-000	25
11	231-611/019-000	25
12	231-612/019-000	25
13	231-613/019-000	25
14	231-614/019-000	25
15	231-615/019-000	25
16	231-616/019-000	10
17	231-617/019-000	10
18	231-618/019-000	10
19	231-619/019-000	10
20	231-620/019-000	10
21	231-621/019-000	10
22	231-622/019-000	10
23	231-623/019-000	10
24	231-624/019-000	10

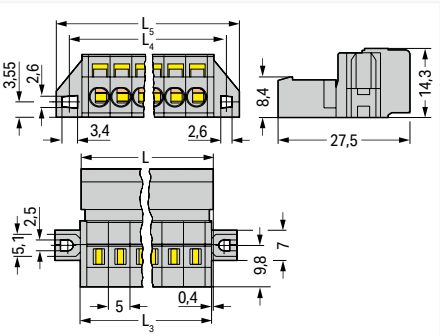

L = (pole no. – 1) x pin spacing + 8.2 mm
L_3 = L – 0.2 mm
L_4 = L3 + 5.8 mm
L_5 = L3 + 11.8 mm

PU = packaging unit; SPU = subpackaging unit; Dimensions in mm

Variants:
- Other pole numbers
- Gold-plated or partially gold-plated contact surfaces
- Other versions (or variants) can be requested from WAGO Sales or configured at https://configurator.wago.com/.

1-conductor male connector ▸ *MCS* MIDI Classic ▸ 231 Series

Pin spacing: 5 mm / 0.197 inches ▸ Actuation type: Operating tool ▸ CAGE CLAMP® ▸ Conductor entry direction to mating direction: 0 ° ▸ Color: gray

Mounting type: Feed-through mounting ▸ Mounting type: Snap-in flange



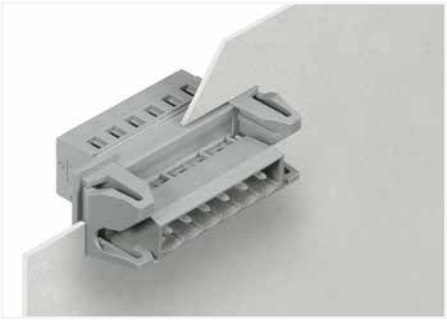

231-606/114-000

Male connector, with snap-in flanges, for feedthrough applications, for 0.5 … 2.5 mm plate thickness

Pole number	Item No.	PU
2	231-602/114-000	50
3	231-603/114-000	50
4	231-604/114-000	50
5	231-605/114-000	50
6	231-606/114-000	50
7	231-607/114-000	25
8	231-608/114-000	25
9	231-609/114-000	25
10	231-610/114-000	25
11	231-611/114-000	25
12	231-612/114-000	25
13	231-613/114-000	25
14	231-614/114-000	25
15	231-615/114-000	10
16	231-616/114-000	10
17	231-617/114-000	10
18	231-618/114-000	10
19	231-619/114-000	10
20	231-620/114-000	10
21	231-621/114-000	10
22	231-622/114-000	10
23	231-623/114-000	10
24	231-624/114-000	10

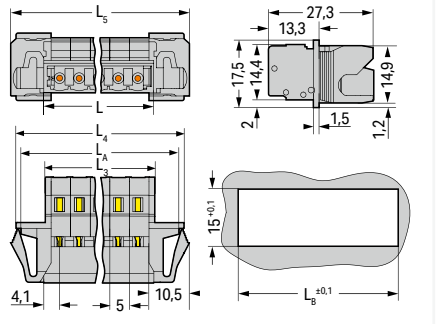

L = (pole no. x pin spacing) + 3.2 mm
L_3 = L – 0.2 mm
L_4 = L_3 + 15.2 mm
L_5 = L_3 + 18 mm
L_A = L_3 + 12.6 mm
L_B = L_3 + 13.2 mm

PU = packaging unit; SPU = subpackaging unit; Dimensions in mm

Variants:
- Other pole numbers
- Gold-plated or partially gold-plated contact surfaces
- Other versions (or variants) can be requested from WAGO Sales or configured at https://configurator.wago.com/.

1-conductor male connector ▸ *MCS* MIDI Classic ▸ 2231 Series

Pin spacing: 5 mm / 0.197 inches ▸ Actuation type: Lever ▸ Push-in CAGE CLAMP® ▸ Conductor entry direction to mating direction: 0 ° ▸ Color: gray



- Universal connection for all conductor types
- Easy wiring during cable pre-assembly and on devices thanks to vertical and horizontal CAGE CLAMP® actuation
- For wire-to-wire and board-to-wire connections
- Versions with snap-in mounting feet or flanges for surface or through-panel installation
- Can be coded

Derating Curve
1-conductor female connector (231-102/026-000) with 1-conductor male header (231-602)
Pin spacing: 5 mm / Conductor cross-section: 2.5 mm² "f-st"
Based on: EN 60512-5-2 / Reduction factor: 0.8

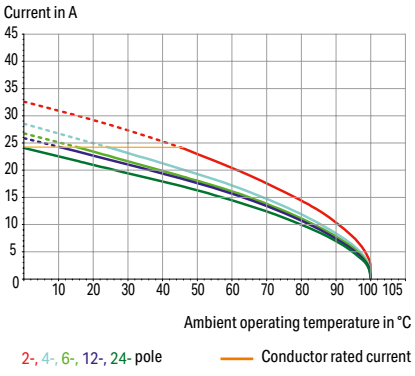

Electrical data			
Ratings per	**IEC/EN 60664-1**		
Overvoltage category	III	III	II
Pollution degree	3	2	2
Nominal voltage	320 V	320 V	630 V
Rated impulse withstand voltage	4 kV	4 kV	4 kV
Rated current	16 A	16 A	16 A
Approvals per	**UL 1059**		
Use group	B	C	D
Rated voltage	300 V	-	300 V
Rated current	16 A	-	10 A
Ratings			
Approvals per	UL 1977		
Rated voltage	600 V		
Rated current	15 A		

Connection Data	
Connection technology	Push-in CAGE CLAMP®
Strip length	11 … 12 mm / 0.43 … 0.47 inches
Solid conductor	0.2 … 2.5 mm² / 24 … 12 AWG
Fine-stranded conductor	0.2 … 2.5 mm² / 24 … 12 AWG
Fine-stranded conductor; with insulated ferrule	0.25 … 1.5 mm²
Fine-stranded conductor; with uninsulated ferrule	0.25 … 2.5 mm²

Material data	
Material group	I
Insulation material (main housing)	Polyamide (PA66)
Flammability class per UL94	V0
Clamping spring material	Chrome-nickel spring steel (CrNi)
Contact material	Electrolytic copper (E_{Cu})
Contact Plating	Tin

Environmental requirements	
Limit temperature range	-60 … +100 °C
Processing temperature	-35 … +60 °C

Note:
The *MCS – MULTI CONNECTION SYSTEM* includes connectors without breaking capacity in accordance with DIN EN 61984. When used as intended, these connectors must not be connected/disconnected when live or under load.When used as intended, these connectors must not be connected/disconnected when live or under load. The circuit design should ensure header pins, which can be touched, are not live when unmated.

Strain relief Page 823
Direct marking Page 628
See technical section for further information
Approvals and corresponding ratings, visit www.wago.com

1-conductor male connector ▸ *MCS* MIDI Classic ▸ 2231 Series

Pin spacing: 5 mm / 0.197 inches ▸ Actuation type: Lever ▸ Push-in CAGE CLAMP® ▸ Conductor entry direction to mating direction: 0 ° ▸ Color: gray



2231-1606

Pole number	Item No.	PU
2	**2231-1602**	100
3	**2231-1603**	100
4	**2231-1604**	100
5	**2231-1605**	50
6	**2231-1606**	50
7	**2231-1607**	50
8	**2231-1608**	50
10	**2231-1610**	25
12	**2231-1612**	25
16	**2231-1616**	25

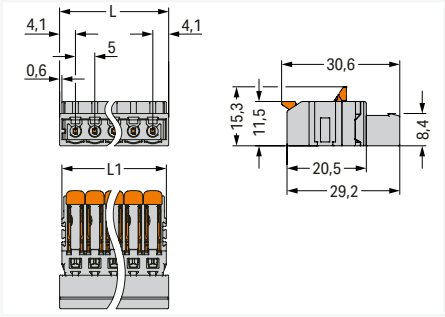

L1 = (pole no. x pin spacing) + 3.2 mm
L2 = (pole no. x pin spacing) + 2 mm

PU = packaging unit; SPU = subpackaging unit; Dimensions in mm

Variants:
- Other pole numbers
- Gold-plated or partially gold-plated contact surfaces
- Other versions (or variants) can be requested from WAGO Sales or configured at https://configurator.wago.com/.

THT female header ▸ *MCS* MIDI Classic ▸ 232 Series

Pin spacing: 5 mm / 0.197 inches ▸ Solder pin dimensions: 0.6 x 1 mm ▸ Solder pin length: 5 mm ▸ Color: gray

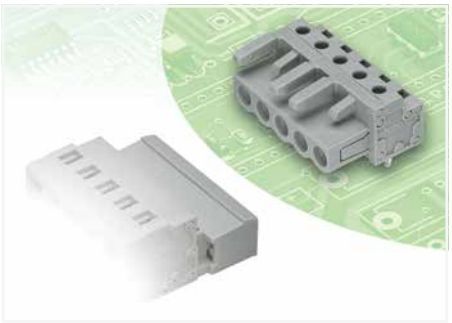

- Horizontal or vertical PCB mounting via straight or angled solder pins
- For board-to-board and board-to-wire connections
- Touch-proof PCB outputs
- Easy-to-identify PCB inputs and outputs
- With coding fingers

Derating Curve
THT female header (232-232) with
1-conductor male connector (231-602)
Pin spacing: 5 mm / Conductor cross-section: 2.5 mm² "f-st"
Based on: EN 60512-5-2 / Reduction factor: 0.8

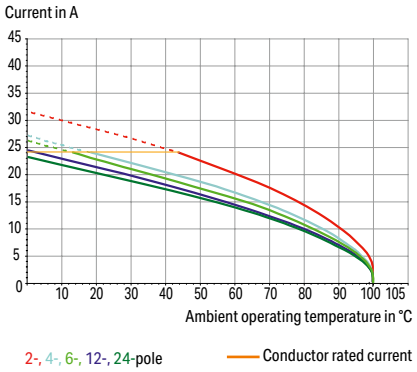

Electrical data			
Ratings per	**IEC/EN 60664-1**		
Overvoltage category	III	III	II
Pollution degree	3	2	2
Nominal voltage	320 V	320 V	630 V
Rated impulse withstand voltage	4 kV	4 kV	4 kV
Rated current	12 A	12 A	12 A
Approvals per	**UL 1059**		
Use group	B	C	D
Rated voltage	300 V	-	300 V
Rated current	16 A	-	10 A
Ratings			
Approvals per	UL 1977		
Rated voltage	600 V		
Rated current	15 A		
Approvals per	**CSA**		
Use group	B	C	D
Rated voltage	300 V	-	300 V
Rated current	15 A	-	10 A

Material data	
Material group	I
Insulation material (main housing)	Polyamide (PA66)
Flammability class per UL94	V0
Contact material	Copper alloy
Contact Plating	Tin

Mechanical data	
Solder pin arrangement	over the entire female connector (in-line)
Number of solder pins per potential	1
Solder pin length	5 mm
Solder pin dimensions	0.6 x 1 mm
Drilled hole diameter	1.3 $^{(+0.1)}$ mm

Environmental requirements	
Limit temperature range	-60 … +100 °C
Processing temperature	-35 … +60 °C

Note:
The *MCS – MULTI CONNECTION SYSTEM* includes connectors without breaking capacity in accordance with DIN EN 61984. When used as intended, these connectors must not be connected/disconnected when live or under load.When used as intended, these connectors must not be connected/disconnected when live or under load. The circuit design should ensure header pins, which can be touched, are not live when unmated.

Installation	Page 818, 1071
Test and measurement	Page 833, 1088
Cutout dimensions	Page 632
See technical section for further information	
Approvals and corresponding ratings, visit www.wago.com	

THT female header ▸ *MCS* MIDI Classic ▸ 232 Series

Pin spacing: 5 mm / 0.197 inches ▸ Solder pin dimensions: 0.6 x 1 mm ▸ Solder pin length: 5 mm ▸ Color: gray

Mating direction to the PCB: 0 °



232-236

Pole number	Item No.	PU
2	232-232	200
3	232-233	100
4	232-234	100
5	232-235	100
6	232-236	50
7	232-237	50
8	232-238	50
9	232-239	50
10	232-240	50
11	232-241	25
12	232-242	25
13	232-243	25
14	232-244	25
15	232-245	25
16	232-246	25
17	232-247	25
18	232-248	25
19	232-249	10
20	232-250	10
21	232-251	10
22	232-252	10
23	232-253	10
24	232-254	10

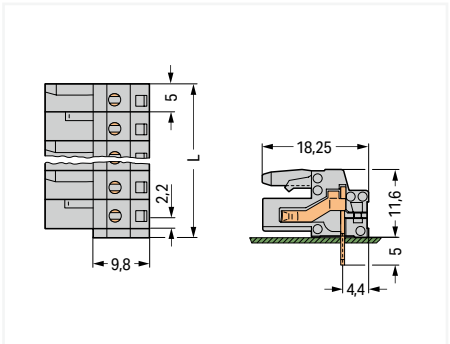

L = (pole no. x pin spacing) + 1.5 mm
Distance to first solder pin: 2.2 mm
2- to 3-pole female connectors – one latch only

Mating direction to the PCB: 90 °



232-136

Pole number	Item No.	PU
2	232-132	100
3	232-133	100
4	232-134	100
5	232-135	100
6	232-136	50
7	232-137	50
8	232-138	50
9	232-139	50
10	232-140	50
11	232-141	25
12	232-142	25
13	232-143	25
14	232-144	25
15	232-145	25
16	232-146	25
17	232-147	25
18	232-148	25
19	232-149	10
20	232-150	10
21	232-151	10
22	232-152	10
23	232-153	10
24	232-154	10

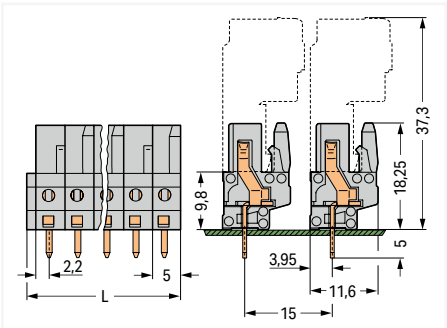

L = (pole no. x pin spacing) + 1.5 mm
2- to 3-pole female connectors – one latch only

Locking of plug-in connection: Locking lever ▸ Mating direction to the PCB: 0 °



232-236/039-000

Pole number	Item No.	PU
2	232-232/039-000	100
3	232-233/039-000	50
4	232-234/039-000	50
5	232-235/039-000	50
6	232-236/039-000	50
7	232-237/039-000	50
8	232-238/039-000	50
9	232-239/039-000	25
10	232-240/039-000	25
11	232-241/039-000	25
12	232-242/039-000	25
13	232-243/039-000	25
14	232-244/039-000	25
15	232-245/039-000	25
16	232-246/039-000	10
17	232-247/039-000	10
18	232-248/039-000	10
19	232-249/039-000	10
20	232-250/039-000	10
21	232-251/039-000	10
22	232-252/039-000	10
23	232-253/039-000	10
24	232-254/039-000	10

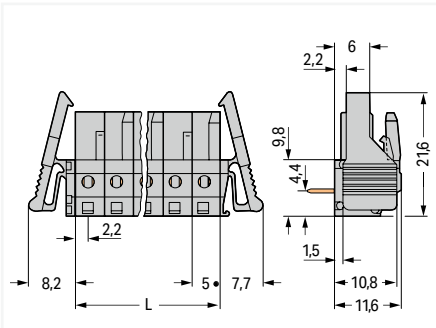

L = pole no. x pin spacing
Distance to first solder pin: 2.2 mm
2- to 3-pole female connectors – one latch only

PU = packaging unit; SPU = subpackaging unit; Dimensions in mm

Variants:

- Other pole numbers
- 3.8 mm pin projection for male headers with straight solder pins
- Gold-plated or partially gold-plated contact surfaces
- Other versions (or variants) can be requested from WAGO Sales or configured at https://configurator.wago.com/.

THT female header ▸ *MCS* MIDI Classic ▸ 232 Series

Pin spacing: 5 mm / 0.197 inches ▸ Solder pin dimensions: 0.6 x 1 mm ▸ Solder pin length: 5 mm ▸ Color: gray

Locking of plug-in connection: Locking lever ▸ Mating direction to the PCB: 90 °



232-136/039-000

Pole number	Item No.	PU
2	232-132/039-000	100
3	232-133/039-000	50
4	232-134/039-000	50
5	232-135/039-000	50
6	232-136/039-000	50
7	232-137/039-000	50
8	232-138/039-000	50
9	232-139/039-000	25
10	232-140/039-000	25
11	232-141/039-000	25
12	232-142/039-000	25
13	232-143/039-000	25
14	232-144/039-000	25
15	232-145/039-000	25
16	232-146/039-000	10
17	232-147/039-000	10
18	232-148/039-000	10
19	232-149/039-000	10
20	232-150/039-000	10
21	232-151/039-000	10
22	232-152/039-000	10
23	232-153/039-000	10

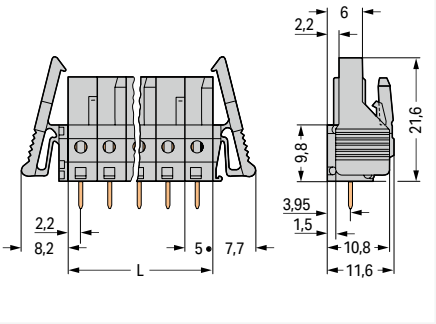

L = pole no. x pin spacing
2- to 3-pole female connectors – one latch only

Mounting type: Feed-through mounting; Panel mounting ▸ Mounting type: Mounting flange ▸ Mating direction to the PCB: 0 °



232-236/031-000

Pole number	Item No.	PU
2	232-232/031-000	100
3	232-233/031-000	50
4	232-234/031-000	50
5	232-235/031-000	50
6	232-236/031-000	50
7	232-237/031-000	50
8	232-238/031-000	50
9	232-239/031-000	25
10	232-240/031-000	25
11	232-241/031-000	25
12	232-242/031-000	25
13	232-243/031-000	25
14	232-244/031-000	25
15	232-245/031-000	25
16	232-246/031-000	10
17	232-247/031-000	10
18	232-248/031-000	10
19	232-249/031-000	10
20	232-250/031-000	10
21	232-251/031-000	10
22	232-252/031-000	10
23	232-253/031-000	10
24	232-254/031-000	10

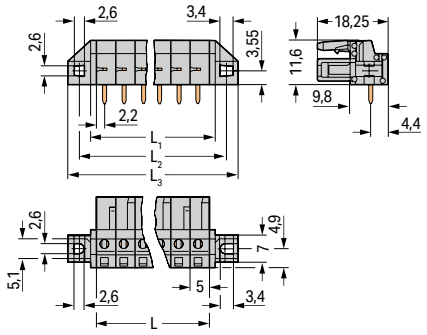

L = pole no. x pin spacing
L_1 = L + 3 mm
L_2 = L + 8.8 mm
L_3 = L + 14.8 mm
2- to 3-pole female connectors – one latch only

Mounting type: Feed-through mounting; Panel mounting ▸ Mounting type: Mounting flange ▸ Mating direction to the PCB: 90 °



232-136/031-000

Pole number	Item No.	PU
2	232-132/031-000	100
3	232-133/031-000	50
4	232-134/031-000	50
5	232-135/031-000	50
6	232-136/031-000	50
7	232-137/031-000	50
8	232-138/031-000	50
9	232-139/031-000	25
10	232-140/031-000	25
11	232-141/031-000	25
12	232-142/031-000	25
13	232-143/031-000	25
14	232-144/031-000	25
15	232-145/031-000	25
16	232-146/031-000	10
17	232-147/031-000	10
18	232-148/031-000	10
19	232-149/031-000	10
20	232-150/031-000	10
21	232-151/031-000	10
22	232-152/031-000	10
23	232-153/031-000	10
24	232-154/031-000	10

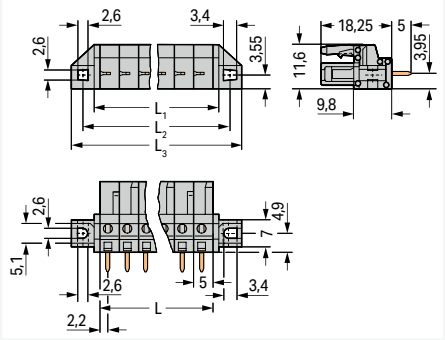

L = pole no. x pin spacing
L_1 = L + 3 mm
L_2 = L + 8.8 mm
L_3 = L + 14.8 mm
2- to 3-pole female connectors – one latch only

PU = packaging unit; SPU = subpackaging unit; Dimensions in mm

Variants:
- Other pole numbers
- 3.8 mm pin projection for male headers with straight solder pins
- Gold-plated or partially gold-plated contact surfaces
- Other versions (or variants) can be requested from WAGO Sales or configured at https://configurator.wago.com/.

THT female header ▸ *MCS* MIDI Classic ▸ 232 Series

Pin spacing: 5 mm / 0.197 inches ▸ Solder pin dimensions: 0.6 x 1 mm ▸ Solder pin length: 5 mm ▸ Color: gray

Mounting type: Flush feed-through mounting; Panel mounting ▸ Mounting type: Mounting flange ▸ Mating direction to the PCB: 0 °



232-236/047-000

Pole number	Item No.	PU
2	232-232/047-000	100
3	232-233/047-000	50
4	232-234/047-000	50
5	232-235/047-000	50
6	232-236/047-000	50
7	232-237/047-000	50
8	232-238/047-000	50
9	232-239/047-000	25
10	232-240/047-000	25
11	232-241/047-000	25
12	232-242/047-000	25
13	232-243/047-000	25
14	232-244/047-000	25
15	232-245/047-000	25
16	232-246/047-000	10
17	232-247/047-000	10
18	232-248/047-000	10
19	232-249/047-000	10
20	232-250/047-000	10
21	232-251/047-000	10
22	232-252/047-000	10
23	232-253/047-000	10
24	232-254/047-000	10

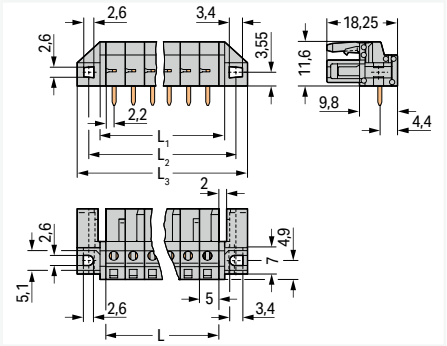

L = pole no. x pin spacing
L_1 = L + 3 mm
L_2 = L + 8.8 mm
L_3 = L + 14.8 mm
2- to 3-pole female connectors – one latch only

Mounting type: Flush feed-through mounting; Panel mounting ▸ Mounting type: Mounting flange ▸ Mating direction to the PCB: 90 °



232-136/047-000

Pole number	Item No.	PU
2	232-132/047-000	100
3	232-133/047-000	50
4	232-134/047-000	50
5	232-135/047-000	50
6	232-136/047-000	50
7	232-137/047-000	50
8	232-138/047-000	50
9	232-139/047-000	25
10	232-140/047-000	25
11	232-141/047-000	25
12	232-142/047-000	25
13	232-143/047-000	25
14	232-144/047-000	25
15	232-145/047-000	25
16	232-146/047-000	10
17	232-147/047-000	10
18	232-148/047-000	10
19	232-149/047-000	10
20	232-150/047-000	10
21	232-151/047-000	10
22	232-152/047-000	10
23	232-153/047-000	10
24	232-154/047-000	10

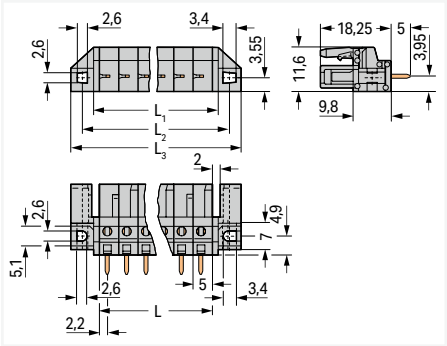

L = pole no. x pin spacing
L_1 = L + 3 mm
L_2 = L + 8.8 mm
L_3 = L + 14.8 mm
2- to 3-pole female connectors – one latch only

PU = packaging unit; SPU = subpackaging unit; Dimensions in mm

Variants:
- Other pole numbers
- 3.8 mm pin projection for male headers with straight solder pins
- Gold-plated or partially gold-plated contact surfaces
- Other versions (or variants) can be requested from WAGO Sales or configured at https://configurator.wago.com/.

THT male header ▸ *MCS* MIDI Classic ▸ 231 Series

Pin spacing: 5 mm / 0.197 inches ▸ Solder pin dimensions: 1 x 1 mm ▸ Color: gray

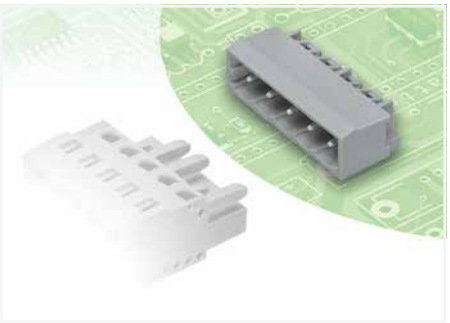

- Horizontal or vertical PCB mounting via straight or angled solder pins
- Pin cross-section: 1 x 1 mm
- With coding fingers

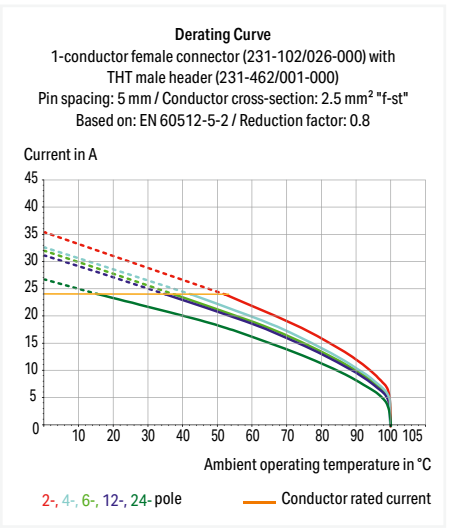

Electrical data			
Ratings per	**IEC/EN 60664-1**		
Overvoltage category	III	III	II
Pollution degree	3	2	2
Nominal voltage	320 V	320 V	630 V
Rated impulse withstand voltage	4 kV	4 kV	4 kV
Rated current	12 A	12 A	12 A
Approvals per	**UL 1059**		
Use group	B	C	D
Rated voltage	300 V	-	300 V
Rated current	10 A	-	10 A
Approvals per	**CSA**		
Use group	B	C	D
Rated voltage	300 V	-	300 V
Rated current	10 A	-	10 A

Material data	
Material group	I
Insulation material (main housing)	Polyamide (PA66)
Flammability class per UL94	V0
Contact material	Electrolytic copper (E_{Cu})
Contact Plating	Tin

Mechanical data	
Solder pin arrangement	over the entire male connector (in-line)
Number of solder pins per potential	1
Solder pin dimensions	1 x 1 mm
Drilled hole diameter	1.4 $^{(+0.1)}$ mm

Environmental requirements	
Limit temperature range	-60 … +100 °C
Processing temperature	-35 … +60 °C

Note:
The *MCS – MULTI CONNECTION SYSTEM* includes connectors without breaking capacity in accordance with DIN EN 61984. When used as intended, these connectors must not be connected/disconnected when live or under load.When used as intended, these connectors must not be connected/disconnected when live or under load. The circuit design should ensure header pins, which can be touched, are not live when unmated.

Coding	Page 814
Installation	Page 818, 1071
Cutout dimensions	Page 632
See technical section for further information	
Approvals and corresponding ratings, visit www.wago.com	

THT male header ▸ *MCS* MIDI Classic ▸ 231 Series

Pin spacing: 5 mm / 0.197 inches ▸ Solder pin dimensions: 1 x 1 mm ▸ Color: gray

Mating direction to the PCB: 0 ° ▸ Solder pin length: 3.8 mm



231-436/001-000

Pole number	Item No.	PU
2	231-432/001-000	200
3	231-433/001-000	200
4	231-434/001-000	200
5	231-435/001-000	200
6	231-436/001-000	100
7	231-437/001-000	100
8	231-438/001-000	100
9	231-439/001-000	100
10	231-440/001-000	100
11	231-441/001-000	100
12	231-442/001-000	100
13	231-443/001-000	50
14	231-444/001-000	50
15	231-445/001-000	50
16	231-446/001-000	50
17	231-447/001-000	50
18	231-448/001-000	50
19	231-449/001-000	50
20	231-450/001-000	50
21	231-451/001-000	50
22	231-452/001-000	50
23	231-453/001-000	50
24	231-454/001-000	50

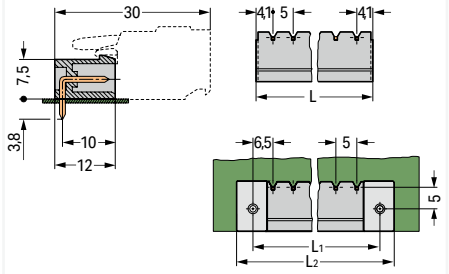

L = (pole no. – 1) x pin spacing + 8.2 mm
L_1 = L + 5 mm
L_2 = L_1 + 7.4 mm

Mating direction to the PCB: 90 ° ▸ Solder pin length: 5 mm



231-136/001-000

Pole number	Item No.	PU
2	231-132/001-000	200
3	231-133/001-000	200
4	231-134/001-000	200
5	231-135/001-000	200
6	231-136/001-000	100
7	231-137/001-000	100
8	231-138/001-000	100
9	231-139/001-000	100
10	231-140/001-000	100
11	231-141/001-000	100
12	231-142/001-000	100
13	231-143/001-000	50
14	231-144/001-000	50
15	231-145/001-000	50
16	231-146/001-000	50
17	231-147/001-000	50
18	231-148/001-000	50
19	231-149/001-000	50
20	231-150/001-000	50
21	231-151/001-000	50
22	231-152/001-000	50
23	231-153/001-000	50
24	231-154/001-000	50

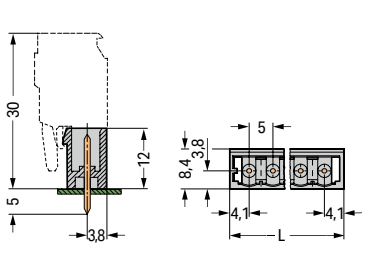

L = (pole no. – 1) x pin spacing + 8.2 mm

Mounting type: Feed-through mounting; Panel mounting ▸ Mounting type: Mounting flange ▸ Mating direction to the PCB: 0 ° ▸ Solder pin length: 3.8 mm



231-436/040-000

Pole number	Item No.	PU
2	231-432/040-000	200
3	231-433/040-000	200
5	231-435/040-000	100
6	231-436/040-000	100
14	231-444/040-000	50

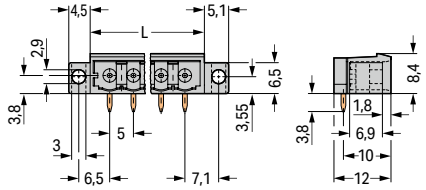

L = (pole no. – 1) x pin spacing + 8.2 mm

PU = packaging unit; SPU = subpackaging unit; Dimensions in mm

Variants:

- Other pole numbers
- 3.8 mm pin projection for male headers with straight solder pins
- Gold-plated or partially gold-plated contact surfaces
- Other versions (or variants) can be requested from WAGO Sales or configured at https://configurator.wago.com/.

THT male header ▸ *MCS* MIDI Classic ▸ 231 Series

Pin spacing: 5 mm / 0.197 inches ▸ Solder pin dimensions: 1 x 1 mm ▸ Color: gray

Mounting type: Feed-through mounting; Panel mounting ▸ Mounting type: Mounting flange ▸ Mating direction to the PCB: 90 ° ▸ Solder pin length: 5 mm



231-136/040-000

Pole number	Item No.	PU
2	**231-132/040-000**	200
3	**231-133/040-000**	200
5	**231-135/040-000**	100
6	**231-136/040-000**	100
14	**231-144/040-000**	50

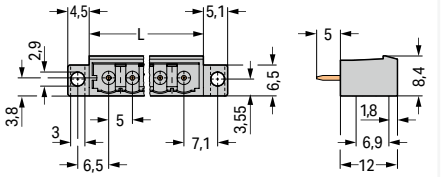

L = (pole no. – 1) x pin spacing + 8.2 mm

9

PU = packaging unit; SPU = subpackaging unit; Dimensions in mm

Variants:

- Other pole numbers
- 3.8 mm pin projection for male headers with straight solder pins
- Gold-plated or partially gold-plated contact surfaces
- Other versions (or variants) can be requested from WAGO Sales or configured at https://configurator.wago.com/.

THT male header for double-deck assembly ▸ *MCS* MIDI Classic ▸ 232 Series

Pin spacing: 5 mm / 0.197 inches ▸ Solder pin dimensions: 1 x 1 mm ▸ Mating direction to the PCB: 0 ° ▸ Solder pin length: 5 mm ▸ Color: gray

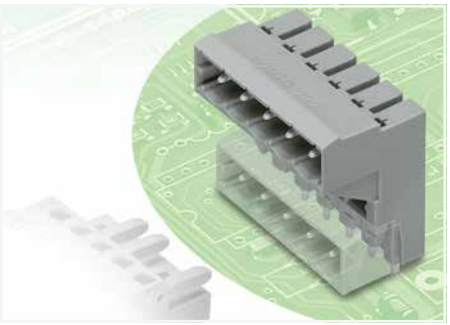

- Male headers for double-deck assembly provide high-density wiring for wire-to-board connections
- Horizontal PCB mounting
- Double-deck design allows male or female headers with angled solder pins to be placed on the lower deck
- Coding option available

Derating Curve
1-conductor female connector (231-102/026-000) with THR male header (232-332)
Pin spacing: 5 mm / Conductor cross-section: 2.5 mm² "f-st"
Based on: EN 60512-5-2 / Reduction factor: 0.8

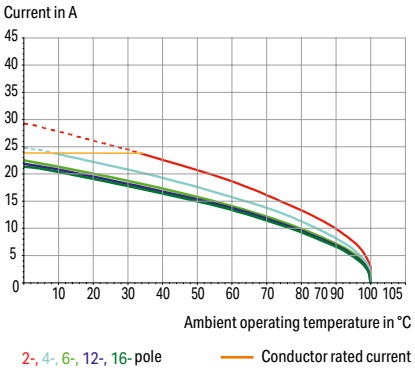

Electrical data			
Ratings per	**IEC/EN 60664-1**		
Overvoltage category	III	III	II
Pollution degree	3	2	2
Nominal voltage	320 V	320 V	630 V
Rated impulse withstand voltage	4 kV	4 kV	4 kV
Rated current	12 A	12 A	12 A
Approvals per	**UL 1059**		
Use group	B	C	D
Rated voltage	300 V	-	300 V
Rated current	10 A	-	10 A
Approvals per	**CSA**		
Use group	B	C	D
Rated voltage	300 V	-	300 V
Rated current	10 A	-	10 A

Material data	
Material group	I
Insulation material (main housing)	Polyamide (PA66)
Flammability class per UL94	V0
Contact material	Electrolytic copper (E_{Cu})
Contact Plating	Tin

Mechanical data	
Solder pin arrangement	over the entire male connector (in-line)
Number of solder pins per potential	1
Solder pin length	5 mm
Solder pin dimensions	1 x 1 mm
Drilled hole diameter	1.4 $^{(+0.1)}$ mm

Environmental requirements	
Limit temperature range	-60 … +100 °C
Processing temperature	-35 … +60 °C

Note:
The *MCS – MULTI CONNECTION SYSTEM* includes connectors without breaking capacity in accordance with DIN EN 61984. When used as intended, these connectors must not be connected/disconnected when live or under load.When used as intended, these connectors must not be connected/disconnected when live or under load. The circuit design should ensure header pins, which can be touched, are not live when unmated.

Coding Page 814

See technical section for further information

Approvals and corresponding ratings, visit www.wago.com

THT male header for double-deck assembly ▸ *MCS* MIDI Classic ▸ 232 Series

Pin spacing: 5 mm / 0.197 inches ▸ Solder pin dimensions: 1 x 1 mm ▸ Mating direction to the PCB: 0 ° ▸ Solder pin length: 5 mm ▸ Color: gray

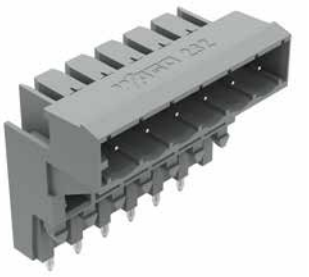

232-336

Pole number	Item No.	PU
2	**232-332**	100
3	**232-333**	100
4	**232-334**	100
5	**232-335**	100
6	**232-336**	50
7	**232-337**	50
8	**232-338**	50
10	**232-340**	50
12	**232-342**	50
16	**232-346**	25

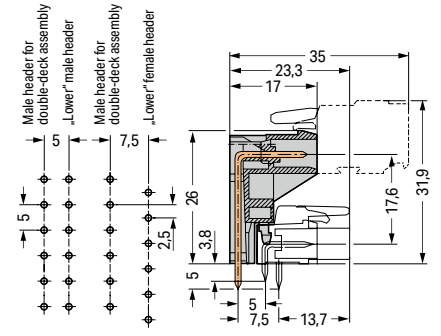

Length = (pole no. – 1) x pin spacing + 8.2 mm
The solder pins of the "lower" male headers are in line.
The solder pins of the "lower" female headers are staggered by half a pin spacing.

PU = packaging unit; SPU = subpackaging unit; Dimensions in mm

Variants:
- Other pole numbers
- Gold-plated or partially gold-plated contact surfaces
- Other versions (or variants) can be requested from WAGO Sales or configured at https://configurator.wago.com/.

THT male header ▸ *MCS* MIDI Classic ▸ 231 Series

Pin spacing: 5 mm / 0.197 inches ▸ Solder pin dimensions: 1.2 x 1.2 mm ▸ Color: gray

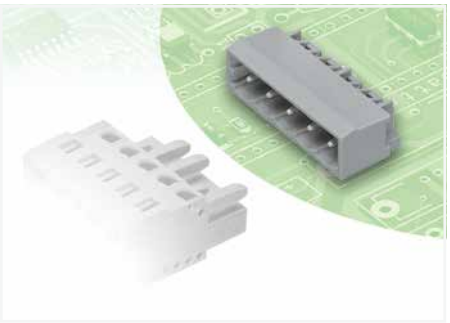

- Horizontal or vertical PCB mounting via straight or angled solder pins
- 1.2 x 1.2 mm solder pins allow nominal current up to 16 A, enhancing stability of shorter headers
- With coding fingers

Derating Curve
1-conductor female connector (231-102/026-000) with
THT male header (231-462/001-000)
Pin spacing: 5 mm / Conductor cross-section: 2.5 mm² "f-st"
Based on: EN 60512-5-2 / Reduction factor: 0.8

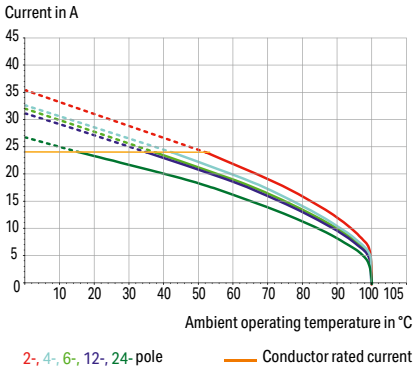

Electrical data			
Ratings per	**IEC/EN 60664-1**		
Overvoltage category	III	III	II
Pollution degree	3	2	2
Nominal voltage	250 V	320 V	630 V
Rated impulse withstand voltage	4 kV	4 kV	4 kV
Rated current	16 A	16 A	16 A
Approvals per	**UL 1059**		
Use group	B	C	D
Rated voltage	300 V	-	300 V
Rated current	20 A	-	10 A
Ratings			
Approvals per	UL 1977		
Rated voltage	600 V		
Rated current	15 A		
Approvals per	**CSA**		
Use group	B	C	D
Rated voltage	300 V	-	300 V
Rated current	20 A	-	10 A

Material data	
Material group	I
Insulation material (main housing)	Polyamide (PA66)
Flammability class per UL94	V0
Contact material	Electrolytic copper (E_{Cu})
Contact Plating	Tin

Mechanical data	
Solder pin arrangement	over the entire male connector (in-line)
Number of solder pins per potential	1
Solder pin dimensions	1.2 x 1.2 mm
Drilled hole diameter	1.7 $^{(+0.1)}$ mm

Environmental requirements	
Limit temperature range	-60 … +100 °C
Processing temperature	-35 … +60 °C

Note:
The *MCS – MULTI CONNECTION SYSTEM* includes connectors without breaking capacity in accordance with DIN EN 61984. When used as intended, these connectors must not be connected/disconnected when live or under load.When used as intended, these connectors must not be connected/disconnected when live or under load. The circuit design should ensure header pins, which can be touched, are not live when unmated.

Coding	Page 814
Installation	Page 818, 1071
Cutout dimensions	Page 632
See technical section for further information	
Approvals and corresponding ratings, visit www.wago.com	

THT male header ▸ *MCS* MIDI Classic ▸ 231 Series

Pin spacing: 5 mm / 0.197 inches ▸ Solder pin dimensions: 1.2 x 1.2 mm ▸ Color: gray

Mating direction to the PCB: 0 ° ▸ Solder pin length: 3.8 mm



231-466/001-000

Pole number	Item No.	PU
2	231-462/001-000	200
3	231-463/001-000	200
4	231-464/001-000	200
5	231-465/001-000	200
6	231-466/001-000	100
7	231-467/001-000	100
8	231-468/001-000	100
9	231-469/001-000	100
10	231-470/001-000	100
11	231-471/001-000	100
12	231-472/001-000	100
13	231-473/001-000	50
14	231-474/001-000	50
15	231-475/001-000	50
16	231-476/001-000	50
17	231-477/001-000	50
18	231-478/001-000	50
19	231-479/001-000	50
20	231-480/001-000	50
21	231-481/001-000	50
22	231-482/001-000	50
23	231-483/001-000	50
24	231-484/001-000	50

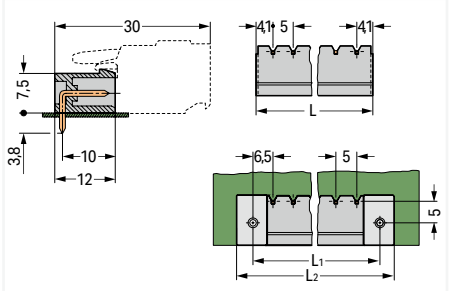

L = (pole no. – 1) x pin spacing + 8.2 mm
L_1 = L + 5 mm
L_2 = L_1 + 7.4 mm

Mating direction to the PCB: 90 ° ▸ Solder pin length: 5 mm



231-166/001-000

Pole number	Item No.	PU
2	231-162/001-000	200
3	231-163/001-000	200
4	231-164/001-000	200
5	231-165/001-000	200
6	231-166/001-000	200
7	231-167/001-000	100
8	231-168/001-000	100
9	231-169/001-000	100
10	231-170/001-000	100
11	231-171/001-000	100
12	231-172/001-000	100
13	231-173/001-000	50
14	231-174/001-000	50
15	231-175/001-000	50
16	231-176/001-000	50
17	231-177/001-000	50
18	231-178/001-000	50
19	231-179/001-000	50
20	231-180/001-000	50
21	231-181/001-000	50
22	231-182/001-000	50
23	231-183/001-000	50
24	231-184/001-000	50

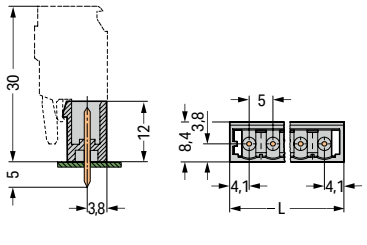

L = (pole no. – 1) x pin spacing + 8.2 mm

Mounting type: Feed-through mounting; Panel mounting ▸ Mounting type: Mounting flange ▸ Mating direction to the PCB: 0 ° ▸ Solder pin length: 3.8 mm



231-466/040-000

Pole number	Item No.	PU
2	231-462/040-000	200
3	231-463/040-000	200
5	231-465/040-000	100
6	231-466/040-000	100
14	231-474/040-000	50

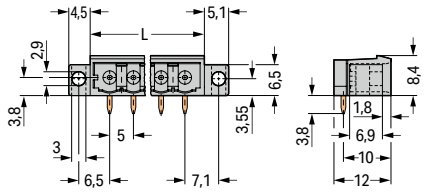

L = (pole no. – 1) x pin spacing + 8.2 mm

PU = packaging unit; SPU = subpackaging unit; Dimensions in mm

Variants:

- Other pole numbers
- 3.8 mm pin projection for male headers with straight solder pins
- Gold-plated or partially gold-plated contact surfaces
- Other versions (or variants) can be requested from WAGO Sales or configured at https://configurator.wago.com/.

THT male header ▸ *MCS* MIDI Classic ▸ 231 Series

Pin spacing: 5 mm / 0.197 inches ▸ Solder pin dimensions: 1.2 x 1.2 mm ▸ Color: gray

Mounting type: Feed-through mounting; Panel mounting ▸ Mounting type: Mounting flange ▸ Mating direction to the PCB: 90 ° ▸ Solder pin length: 5 mm



231-166/040-000

Pole number	Item No.	PU
2	**231-162/040-000**	200
3	**231-163/040-000**	200
5	**231-165/040-000**	100
6	**231-166/040-000**	100
14	**231-174/040-000**	50

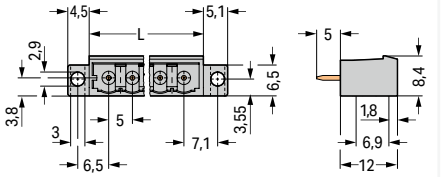

L = (pole no. – 1) x pin spacing + 8.2 mm

9

PU = packaging unit; SPU = subpackaging unit; Dimensions in mm

Variants:

- Other pole numbers
- 3.8 mm pin projection for male headers with straight solder pins
- Gold-plated or partially gold-plated contact surfaces
- Other versions (or variants) can be requested from WAGO Sales or configured at https://configurator.wago.com/.

THR (Through-Hole Reflow) Soldering Process



By using high-temperature-resistant plastic and a streamlined pin design, WAGO's THR male headers and PCB terminal blocks meet requirements for SMT process capability while maintaining the necessary stability. Both headers and terminal blocks are simply pushed into the solder paste-filled PCB holes and then soldered along with the SMT components via reflow soldering. The previous wave soldering process is no longer necessary. The result is a perfect connection – both mechanically and electrically.

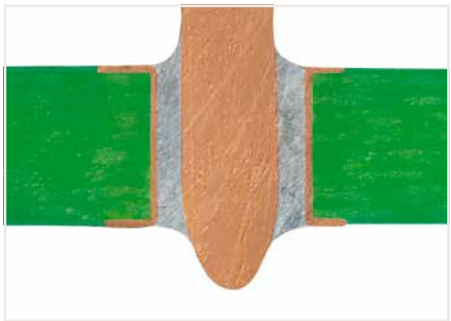



Terminal strips with an additional suction pad in tape-and-reel packaging per IEC 60286-3
WAGO recommends both a temperature profile that adheres to EN 61760-1 and the use of forced convection ovens for processing THR components.

1

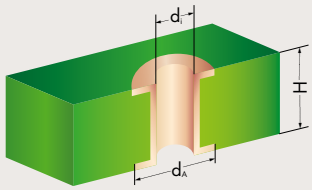

Metal-plated PCB bore hole

Series	d_i (mm)	d_A (mm)	H (mm)	d_s (mm)	D_s (µm)	d (mm)	L (mm)
218	$1.1^{+0.1}$	1.9	< 2	1.8	150	0.9	2.8
231 (1 x 1 mm)	$1.4^{+0.1}$	2.5	< 2	2.4	150	1.2	2.4
231 (1.2 x 1.2 mm)	$1.7^{+0.1}$	2.8	< 2	2.7	150	1.5	2.4
236	$1.1^{+0.1}$	2.2	< 2	2.1	150	0.9	3.6
250	$1.1^{+0.1}$	2.0	< 2	1.9	150	0.9	2.4
713	$1.0^{+0.1}$	1.9	< 2	1.8	150	1.0	2.4
733	$1.2^{+0.1}$	1.9	< 2	1.8	150	1.0	2.4
734	$1.4^{+0.1}$	2.5	< 2	2.4	150	1.2	2.4
2060	$1.5^{+0.1}$	2.4	< 2	2.3	150	1.25	2.4
2061	$1.5^{+0.1}$	2.4	< 2	2.3	150	1.25	1.5 / 2.4
2086	$1.0^{+0.1}$	2.0	< 2	1.9	150	0.85	1.5 / 2.4

d_i: Plated through-hole diameter
d_A: Outer diameter of metal-plated PCB hole*
H: PCB thickness
d_s: Pattern hole diameter
D_s: Pattern thickness
d: Pin diagonal
L: Pin length

* When laying out the metal-plated bore holes, the clearance and creepage distance requirements – as specified in the equipment standards – must be considered.

2

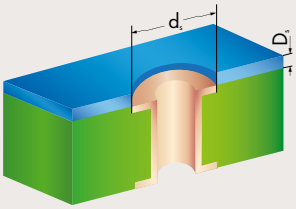

SMD positioning pattern

Solder pin form

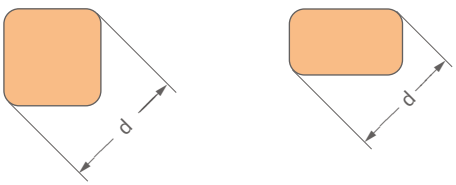

3

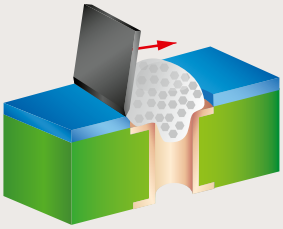

Solder paste application

4

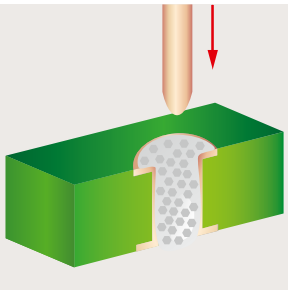

Component assembly, automatic/by hand

5

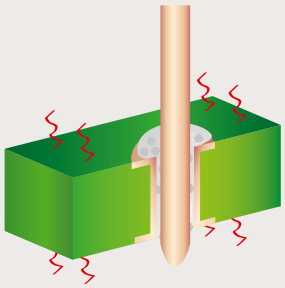

Reflow soldering process

6

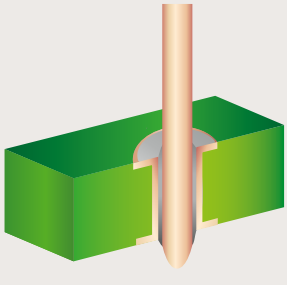

THR soldering joint

THR male header ▸ *MCS* MIDI Classic ▸ 231 Series

Pin spacing: 5 mm / 0.197 inches ▸ Solder pin dimensions: 1 x 1 mm ▸ Color: black

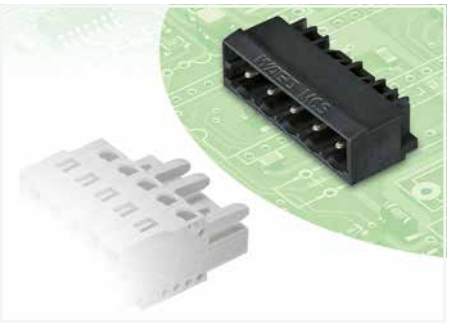

- THR male headers for reflow soldering in SMT applications
- Available in tape-and-reel packaging for automated pick-and-place PCB assembly
- Also available in bulk packaging for manual placement
- Male headers may be mounted horizontally or vertically
- With coding fingers

Derating Curve
1-conductor female connector (231-102/026-000) with THR male header (231-432/001-000/105-604)
Pin spacing: 5 mm / Conductor cross-section: 2.5 mm² "f-st"
Based on: EN 60512-5-2 / Reduction factor: 0.8

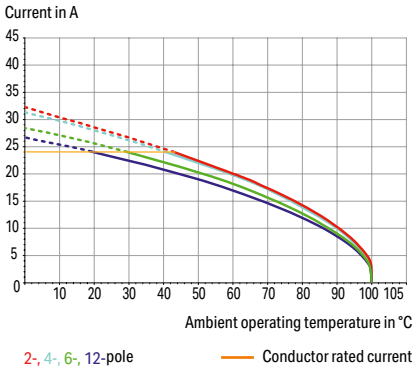

Electrical data			
Ratings per	**IEC/EN 60664-1**		
Overvoltage category	III	III	II
Pollution degree	3	2	2
Nominal voltage	320 V	320 V	630 V
Rated impulse withstand voltage	4 kV	4 kV	4 kV
Rated current	12 A	12 A	12 A
Approvals per	**UL 1059**		
Use group	B	C	D
Rated voltage	300 V	-	300 V
Rated current	10 A	-	10 A
Approvals per	**CSA**		
Use group	B	C	D
Rated voltage	300 V	-	300 V
Rated current	10 A	-	10 A

Material data	
Material group	I
Insulation material (main housing)	Polyphthalamide (PPA GF)
Flammability class per UL94	V0
Contact material	Electrolytic copper (E_{Cu})
Contact Plating	Tin

Mechanical data	
Solder pin arrangement	over the entire male connector (in-line)
Number of solder pins per potential	1
Solder pin length	2.4 mm
Solder pin dimensions	1 x 1 mm
Plated through-hole diameter (THR)	1.4 $^{(+0.1)}$ mm

Environmental requirements	
Limit temperature range	-60 … +100 °C
Processing temperature	-35 … +60 °C

Note:
The *MCS – MULTI CONNECTION SYSTEM* includes connectors without breaking capacity in accordance with DIN EN 61984. When used as intended, these connectors must not be connected/disconnected when live or under load.When used as intended, these connectors must not be connected/disconnected when live or under load. The circuit design should ensure header pins, which can be touched, are not live when unmated.

THR soldering	Page 696
Coding	Page 814
See technical section for further information	
Approvals and corresponding ratings, visit www.wago.com	

THR male header ▸ *MCS* MIDI Classic ▸ 231 Series

Pin spacing: 5 mm / 0.197 inches ▸ Solder pin dimensions: 1 x 1 mm ▸ Color: black

Mating direction to the PCB: 0 °

Suitable for automated assembly



231-436/001-000/105-604

Pole number	Item No.	PU
2	231-432/001-000/105-604	200
3	231-433/001-000/105-604	200
4	231-434/001-000/105-604	200
5	231-435/001-000/105-604	200
6	231-436/001-000/105-604	100
7	231-437/001-000/105-604	100
8	231-438/001-000/105-604	100
9	231-439/001-000/105-604	100
10	231-440/001-000/105-604	100
11	231-441/001-000/105-604	100
12	231-442/001-000/105-604	100



231-437/001-000/105-604/997-407

Pole number	Tape width	Item No.	PU
2	32 mm	231-432/001-000/105-604/997-405	170
3	32 mm	231-433/001-000/105-604/997-405	170
4	56 mm	231-434/001-000/105-604/997-407	170
5	56 mm	231-435/001-000/105-604/997-407	170
6	56 mm	231-436/001-000/105-604/997-407	170
7	56 mm	231-437/001-000/105-604/997-407	170
8	56 mm	231-438/001-000/105-604/997-407	170
9	88 mm	231-439/001-000/105-604/997-409	170
10	88 mm	231-440/001-000/105-604/997-409	170
11	88 mm	231-441/001-000/105-604/997-409	170
12	88 mm	231-442/001-000/105-604/997-409	170

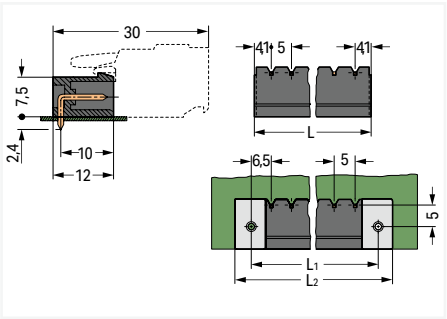

L = (pole no. – 1) x pin spacing + 8.2 mm
L_1 = L + 4.8 mm
L_2 = L_1 + 7.2 mm

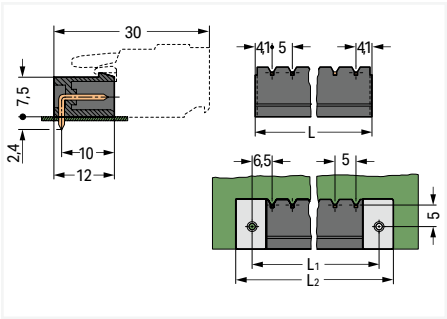

L = (pole no. – 1) x pin spacing + 8.2 mm
L_1 = L + 4.8 mm
L_2 = L_1 + 7.2 mm

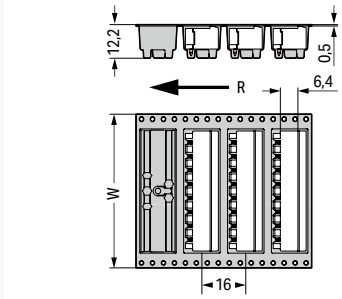

W = tape width
R = feed direction

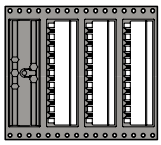

Position with even number of poles

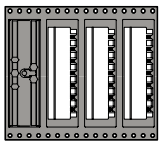

Position with odd number of poles

Pin position in tape-and-reel packaging

PU = packaging unit; SPU = subpackaging unit; Dimensions in mm

Variants:
- Other pole numbers
- Gold-plated or partially gold-plated contact surfaces
- Other versions (or variants) can be requested from WAGO Sales or configured at https://configurator.wago.com/.

THR male header ▸ *MCS* MIDI Classic ▸ 231 Series

Pin spacing: 5 mm / 0.197 inches ▸ Solder pin dimensions: 1 x 1 mm ▸ Color: black

Mating direction to the PCB: 90 °

Suitable for automated assembly



231-136/001-000/105-604

Pole number	Item No.	PU
2	231-132/001-000/105-604	200
3	231-133/001-000/105-604	200
4	231-134/001-000/105-604	200
5	231-135/001-000/105-604	200
6	231-136/001-000/105-604	100
7	231-137/001-000/105-604	100
8	231-138/001-000/105-604	100
9	231-139/001-000/105-604	100
10	231-140/001-000/105-604	100
11	231-141/001-000/105-604	100
12	231-142/001-000/105-604	100



231-136/001-000/105-604/997-407

Pole number	Tape width	Item No.	PU
2	32 mm	231-132/001-000/105-604/997-405	170
3	32 mm	231-133/001-000/105-604/997-405	170
4	56 mm	231-134/001-000/105-604/997-407	170
5	56 mm	231-135/001-000/105-604/997-407	170
6	56 mm	231-136/001-000/105-604/997-407	170
7	56 mm	231-137/001-000/105-604/997-407	170
8	56 mm	231-138/001-000/105-604/997-407	170
9	88 mm	231-139/001-000/105-604/997-409	170
10	88 mm	231-140/001-000/105-604/997-409	170
11	88 mm	231-141/001-000/105-604/997-409	170
12	88 mm	231-142/001-000/105-604/997-409	170

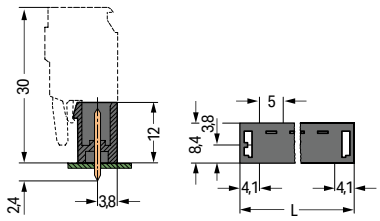

L = (pole no. – 1) x pin spacing + 8.2 mm

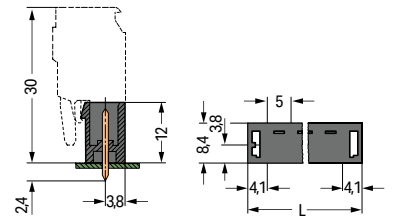

L = (pole no. – 1) x pin spacing + 8.2 mm

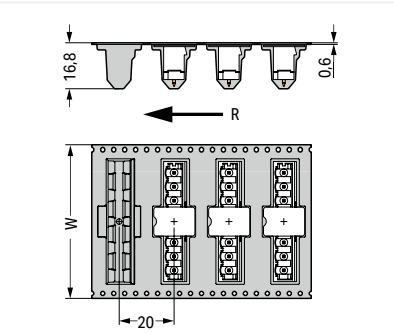

W = tape width
R = feed direction

PU = packaging unit; SPU = subpackaging unit; Dimensions in mm

Variants:
- Other pole numbers
- Gold-plated or partially gold-plated contact surfaces
- Other versions (or variants) can be requested from WAGO Sales or configured at https://configurator.wago.com/.

THR male header ▸ *MCS* MIDI Classic ▸ 231 Series

Pin spacing: 5 mm / 0.197 inches ▸ Solder pin dimensions: 1.2 x 1.2 mm ▸ Color: black

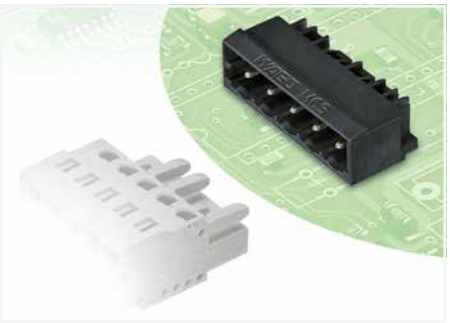

- THR male headers for reflow soldering in SMT applications
- Available in tape-and-reel packaging for automated pick-and-place PCB assembly
- 1.2 x 1.2 mm solder pins allow nominal current up to 16 A, enhancing stability of shorter headers
- Also available in bulk packaging for manual placement
- Male headers may be mounted horizontally or vertically
- With coding fingers

Derating Curve
1-conductor female connector (231-102/026-000) with THT male header (231-462/001-000)
Pin spacing: 5 mm / Conductor cross-section: 2.5 mm² "f-st"
Based on: EN 60512-5-2 / Reduction factor: 0.8

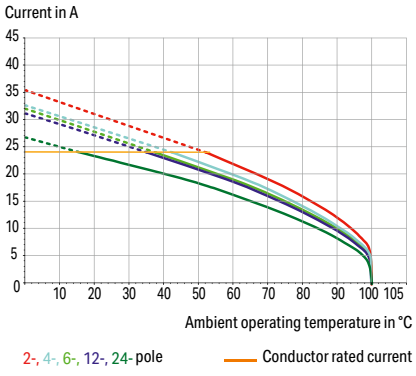

Electrical data			
Ratings per	**IEC/EN 60664-1**		
Overvoltage category	III	III	II
Pollution degree	3	2	2
Nominal voltage	250 V	320 V	630 V
Rated impulse withstand voltage	4 kV	4 kV	4 kV
Rated current	16 A	16 A	16 A
Approvals per	**UL 1059**		
Use group	B	C	D
Rated voltage	300 V	-	300 V
Rated current	10 A	-	10 A
Approvals per	**CSA**		
Use group	B	C	D
Rated voltage	300 V	-	300 V
Rated current	10 A	-	10 A

Material data	
Material group	I
Insulation material (main housing)	Polyphthalamide (PPA GF)
Flammability class per UL94	V0
Contact material	Electrolytic copper (E_{Cu})
Contact Plating	Tin

Mechanical data	
Solder pin arrangement	over the entire male connector (in-line)
Number of solder pins per potential	1
Solder pin length	2.4 mm
Solder pin dimensions	1.2 x 1.2 mm
Plated through-hole diameter (THR)	1.7 $^{(+0.1)}$ mm

Environmental requirements	
Limit temperature range	-60 … +100 °C
Processing temperature	-35 … +60 °C

Note:
The *MCS – MULTI CONNECTION SYSTEM* includes connectors without breaking capacity in accordance with DIN EN 61984. When used as intended, these connectors must not be connected/disconnected when live or under load.When used as intended, these connectors must not be connected/disconnected when live or under load. The circuit design should ensure header pins, which can be touched, are not live when unmated.

THR soldering	Page 696
Coding	Page 814
See technical section for further information	
Approvals and corresponding ratings, visit www.wago.com	

THR male header ▸ *MCS* MIDI Classic ▸ 231 Series

Pin spacing: 5 mm / 0.197 inches ▸ Solder pin dimensions: 1.2 x 1.2 mm ▸ Color: black

Mating direction to the PCB: 0 °

Suitable for automated assembly



231-466/001-000/105-604

Pole number	Item No.	PU
2	231-462/001-000/105-604	200
3	231-463/001-000/105-604	200
4	231-464/001-000/105-604	200
5	231-465/001-000/105-604	200
6	231-466/001-000/105-604	100
7	231-467/001-000/105-604	100
8	231-468/001-000/105-604	100
9	231-469/001-000/105-604	100
10	231-470/001-000/105-604	100
11	231-471/001-000/105-604	100
12	231-472/001-000/105-604	100



231-437/001-000/105-604/997-407

Pole number	Tape width	Item No.	PU
2	32 mm	231-462/001-000/105-604/997-405	170
3	32 mm	231-463/001-000/105-604/997-405	170
4	56 mm	231-464/001-000/105-604/997-407	170
5	56 mm	231-465/001-000/105-604/997-407	170
6	56 mm	231-466/001-000/105-604/997-407	170
7	56 mm	231-467/001-000/105-604/997-407	170
8	56 mm	231-468/001-000/105-604/997-407	170
9	88 mm	231-469/001-000/105-604/997-409	170
10	88 mm	231-470/001-000/105-604/997-409	170
11	88 mm	231-471/001-000/105-604/997-409	170
12	88 mm	231-472/001-000/105-604/997-409	170

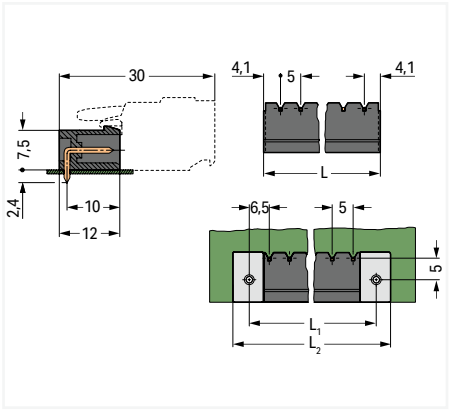

L = (pole no. x pin spacing) + 3.2 mm
L_1 = L + 4.8 mm
L_2 = L_1 + 7.2 mm

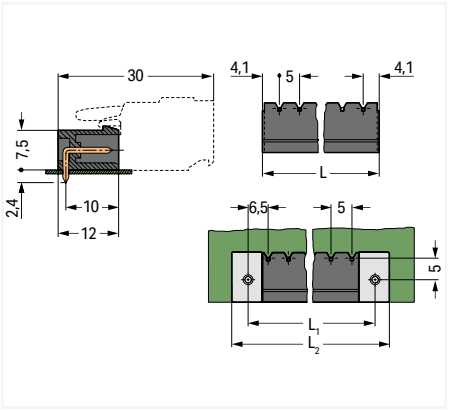

L = (pole no. x pin spacing) + 3.2 mm
L_1 = L + 4.8 mm
L_2 = L_1 + 7.2 mm

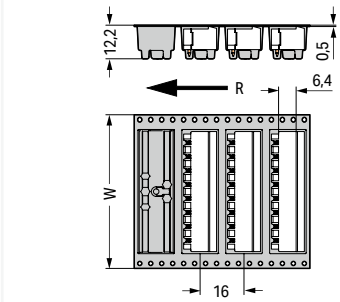

W = tape width
R = feed direction

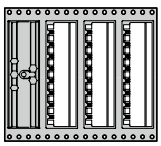

Position with even number of poles

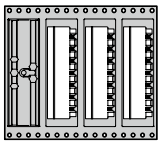

Position with odd number of poles

Pin position in tape-and-reel packaging

PU = packaging unit; SPU = subpackaging unit; Dimensions in mm

Variants:
- Other pole numbers
- Gold-plated or partially gold-plated contact surfaces
- Other versions (or variants) can be requested from WAGO Sales or configured at https://configurator.wago.com/.

THR male header ▸ *MCS* MIDI Classic ▸ 231 Series

Pin spacing: 5 mm / 0.197 inches ▸ Solder pin dimensions: 1.2 x 1.2 mm ▸ Color: black

Mating direction to the PCB: 90 °

Suitable for automated assembly



231-166/001-000/105-604

Pole number	Item No.	PU
2	231-162/001-000/105-604	200
3	231-163/001-000/105-604	200
4	231-164/001-000/105-604	200
5	231-165/001-000/105-604	200
6	231-166/001-000/105-604	100
7	231-167/001-000/105-604	100
8	231-168/001-000/105-604	100
9	231-169/001-000/105-604	100
10	231-170/001-000/105-604	100
11	231-171/001-000/105-604	100
12	231-172/001-000/105-604	100



231-136/001-000/105-604/997-407

Pole number	Tape width	Item No.	PU
2	32 mm	231-162/001-000/105-604/997-405	170
3	32 mm	231-163/001-000/105-604/997-405	170
4	56 mm	231-164/001-000/105-604/997-407	170
5	56 mm	231-165/001-000/105-604/997-407	170
6	56 mm	231-166/001-000/105-604/997-407	170
8	56 mm	231-168/001-000/105-604/997-407	170
9	88 mm	231-169/001-000/105-604/997-409	170
10	88 mm	231-170/001-000/105-604/997-409	170
11	88 mm	231-171/001-000/105-604/997-409	170
12	88 mm	231-172/001-000/105-604/997-409	170

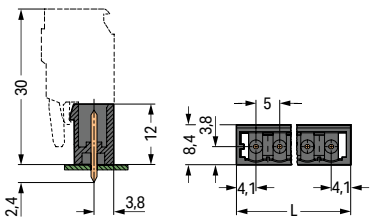

L = (pole no. x pin spacing) + 3.2 mm

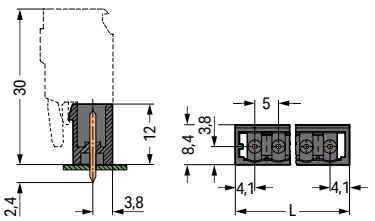

L = (pole no. x pin spacing) + 3.2 mm

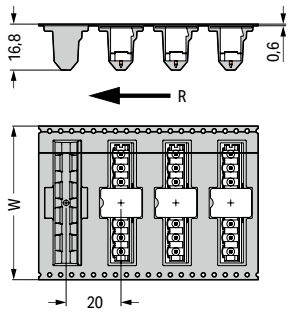

W = tape width
R = feed direction

PU = packaging unit; SPU = subpackaging unit; Dimensions in mm

Variants:
- Other pole numbers
- Gold-plated or partially gold-plated contact surfaces
- Other versions (or variants) can be requested from WAGO Sales or configured at https://configurator.wago.com/.

1-conductor female connector ▸ *MCS* MIDI Classic ▸ 231 Series

Pin spacing: 5.08 mm / 0.2 inches ▸ Actuation type: Operating tool ▸ CAGE CLAMP® ▸ Conductor entry direction to mating direction: 0 ° ▸ Color: orange

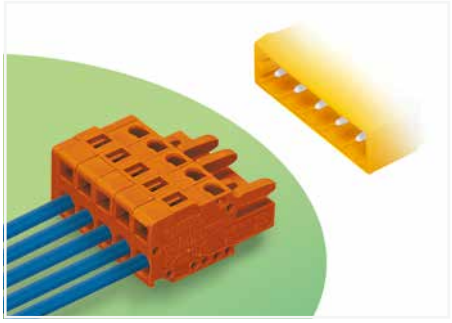

- Universal connection for all conductor types
- Easy cable pre-assembly and on-unit wiring via vertical and horizontal CAGE CLAMP® actuation
- Integrated test ports
- With coding fingers

Derating Curve
1-conductor female connector (231-102/026-000) with THT male header (231-432/001-000)
Pin spacing: 5 mm / Conductor cross-section: 2.5 mm² "f-st"
Based on: EN 60512-5-2 / Reduction factor: 0.8

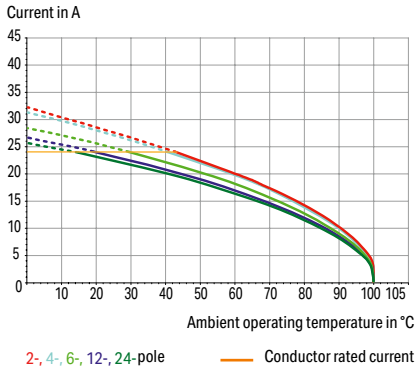

Electrical data			
Ratings per	**IEC/EN 60664-1**		
Overvoltage category	III	III	II
Pollution degree	3	2	2
Nominal voltage	320 V	320 V	630 V
Rated impulse withstand voltage	4 kV	4 kV	4 kV
Rated current	16 A	16 A	16 A
Approvals per	**UL 1059**		
Use group	B	C	D
Rated voltage	300 V	-	300 V
Rated current	15 A	-	10 A
Approvals per	**CSA**		
Use group	B	C	D
Rated voltage	300 V	-	300 V
Rated current	15 A	-	10 A

Connection Data	
Connection technology	CAGE CLAMP®
Strip length	8 … 9 mm / 0.31 … 0.35 inches
Solid conductor	0.08 … 2.5 mm² / 28 … 12 AWG
Fine-stranded conductor	0.08 … 2.5 mm² / 28 … 12 AWG
Fine-stranded conductor; with insulated ferrule	0.25 … 1.5 mm²
Fine-stranded conductor; with uninsulated ferrule	0.25 … 2.5 mm²

Material data	
Material group	I
Insulation material (main housing)	Polyamide (PA66)
Flammability class per UL94	V0
Clamping spring material	Chrome-nickel spring steel (CrNi)
Contact material	Copper alloy
Contact Plating	Tin

Environmental requirements	
Limit temperature range	-60 … +100 °C
Processing temperature	-35 … +60 °C

Note:
The *MCS – MULTI CONNECTION SYSTEM* includes connectors without breaking capacity in accordance with DIN EN 61984. When used as intended, these connectors must not be connected/disconnected when live or under load.When used as intended, these connectors must not be connected/disconnected when live or under load. The circuit design should ensure header pins, which can be touched, are not live when unmated.

Cover	Page 816
Ferrule	Page 1081
Installation	Page 818, 1071
Insulation stop	Page 817
Jumper	Page 830
Marking	Page 1067
Mounting adapter	Page 820
Strain relief	Page 828
Test and measurement	Page 833, 1088
Tool	Page 812, 1072
Direct marking	Page 628
Cutout dimensions	Page 632
See technical section for further information	
Approvals and corresponding ratings, visit www.wago.com	

1-conductor female connector ▸ *MCS* MIDI Classic ▸ 231 Series

Pin spacing: 5.08 mm / 0.2 inches ▸ Actuation type: Operating tool ▸ CAGE CLAMP® ▸ Conductor entry direction to mating direction: 0 ° ▸ Color: orange

Plugging without loss of pin spacing



231-306/026-000

Pole number	Item No.	PU
2	231-302/026-000	100
3	231-303/026-000	100
4	231-304/026-000	100
5	231-305/026-000	100
6	231-306/026-000	50
7	231-307/026-000	50
8	231-308/026-000	50
9	231-309/026-000	50
10	231-310/026-000	50
11	231-311/026-000	25
12	231-312/026-000	25
13	231-313/026-000	25
14	231-314/026-000	25
15	231-315/026-000	25
16	231-316/026-000	25
17	231-317/026-000	25
18	231-318/026-000	10
19	231-319/026-000	10
20	231-320/026-000	10
21	231-321/026-000	10
22	231-322/026-000	10
23	231-323/026-000	10
24	231-324/026-000	10

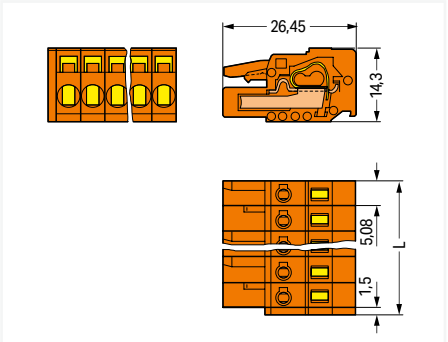

L = (pole no. x pin spacing) + 1.5 mm
2- to 3-pole female connectors – one latch only



231-306/102-000

Pole number	Item No.	PU
2	231-302/102-000	100
3	231-303/102-000	100
4	231-304/102-000	100
5	231-305/102-000	100
6	231-306/102-000	50
7	231-307/102-000	50
8	231-308/102-000	50
9	231-309/102-000	50
10	231-310/102-000	50
11	231-311/102-000	25
12	231-312/102-000	25
13	231-313/102-000	25
14	231-314/102-000	25
15	231-315/102-000	25
16	231-316/102-000	25
17	231-317/102-000	25
18	231-318/102-000	10
19	231-319/102-000	10
20	231-320/102-000	10
21	231-321/102-000	10
22	231-322/102-000	10
23	231-323/102-000	10
24	231-324/102-000	10

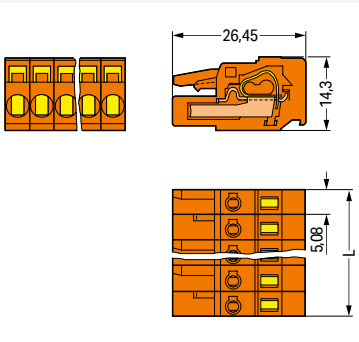

L = pole no. x pin spacing
2- to 3-pole female connectors – one latch only

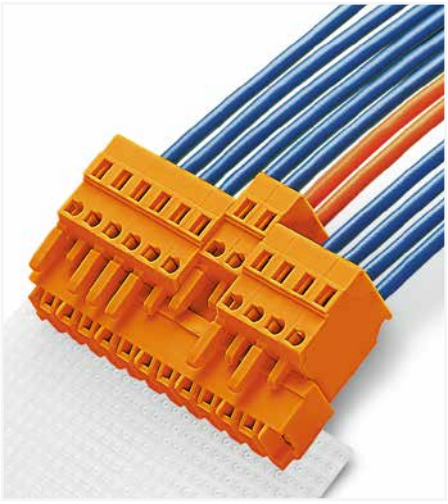

Total pole number for female connectors
= pole number for male header

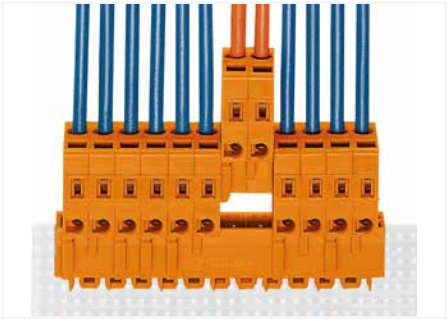

Female connectors with a built-in end plate require no extra space, while maintaining the nominal cross-section. This means: Total length of female connectors is reduced to "pole no. x pin spacing"!

9

PU = packaging unit; SPU = subpackaging unit; Dimensions in mm

Variants:

- Gold-plated or partially gold-plated contact surfaces
- Other versions (or variants) can be requested from WAGO Sales or configured at https://configurator.wago.com/.

1-conductor female connector ▸ *MCS* MIDI Classic ▸ 231 Series

Pin spacing: 5.08 mm / 0.2 inches ▸ Actuation type: Operating tool ▸ CAGE CLAMP® ▸ Conductor entry direction to mating direction: 0 ° ▸ Color: orange

Locking of plug-in connection: Locking lever



231-306/037-000

Pole number	Item No.	PU
2	231-302/037-000	100
3	231-303/037-000	50
4	231-304/037-000	50
5	231-305/037-000	50
6	231-306/037-000	50
7	231-307/037-000	50
8	231-308/037-000	25
9	231-309/037-000	25
10	231-310/037-000	25
11	231-311/037-000	25
12	231-312/037-000	25
13	231-313/037-000	25
14	231-314/037-000	25
15	231-315/037-000	25
16	231-316/037-000	10
17	231-317/037-000	10
18	231-318/037-000	10
19	231-319/037-000	10
20	231-320/037-000	10
21	231-321/037-000	10
22	231-322/037-000	10
23	231-323/037-000	10
24	231-324/037-000	10

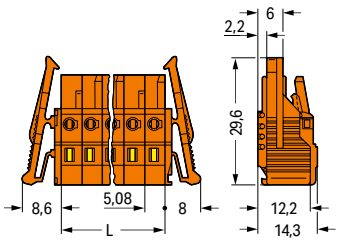

L = pole no. x pin spacing
2- to 3-pole female connectors – one latch only

Locking of plug-in connection: Screw flange



231-306/107-000

Pole number	Item No.	PU
2	231-302/107-000	100
3	231-303/107-000	100
4	231-304/107-000	50
5	231-305/107-000	50
6	231-306/107-000	50
7	231-307/107-000	50
8	231-308/107-000	50
9	231-309/107-000	25
10	231-310/107-000	25
12	231-312/107-000	25
14	231-314/107-000	25
15	231-315/107-000	25
16	231-316/107-000	25

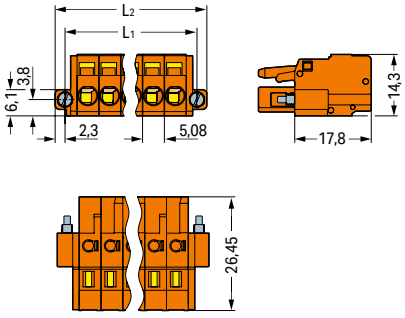

L_1 = (pole no. x pin spacing) + 5.4 mm
L_2 = (pole no. x pin spacing) + 10 mm
2- to 3-pole female connectors – one latch only

Mounting type: Panel mounting ▸ Mounting type: Snap-in foot



231-306/008-000

Pole number	Item No.	PU
2	231-302/008-000	100
3	231-303/008-000	100
4	231-304/008-000	100
5	231-305/008-000	100
6	231-306/008-000	50
7	231-307/008-000	50
8	231-308/008-000	50
9	231-309/008-000	50
10	231-310/008-000	50
11	231-311/008-000	25
12	231-312/008-000	25
13	231-313/008-000	25
14	231-314/008-000	25
15	231-315/008-000	25
16	231-316/008-000	25
17	231-317/008-000	25
18	231-318/008-000	10
19	231-319/008-000	10
20	231-320/008-000	10
21	231-321/008-000	10
22	231-322/008-000	10
23	231-323/008-000	10
24	231-324/008-000	10

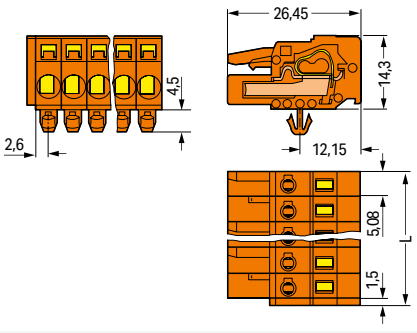

L = (pole no. x pin spacing) + 1.5 mm
2- to 3-pole female connectors – one latch only

PU = packaging unit; SPU = subpackaging unit; Dimensions in mm

Variants:
- Gold-plated or partially gold-plated contact surfaces
- Other versions (or variants) can be requested from WAGO Sales or configured at https://configurator.wago.com/.

1-conductor female connector ▸ *MCS* MIDI Classic ▸ 231 Series

Pin spacing: 5.08 mm / 0.2 inches ▸ Actuation type: Operating tool ▸ CAGE CLAMP® ▸ Conductor entry direction to mating direction: 0 ° ▸ Color: orange

Mounting type: Feed-through mounting; Panel mounting ▸ Mounting type: Mounting flange



231-306/031-000

Pole number	Item No.	PU
2	231-302/031-000	100
3	231-303/031-000	50
4	231-304/031-000	50
5	231-305/031-000	50
6	231-306/031-000	50
7	231-307/031-000	50
8	231-308/031-000	50
9	231-309/031-000	25
10	231-310/031-000	25
11	231-311/031-000	25
12	231-312/031-000	25
13	231-313/031-000	25
14	231-314/031-000	25
15	231-315/031-000	25
16	231-316/031-000	10
17	231-317/031-000	10
18	231-318/031-000	10
19	231-319/031-000	10
20	231-320/031-000	10
21	231-321/031-000	10
22	231-322/031-000	10
23	231-323/031-000	10
24	231-324/031-000	10

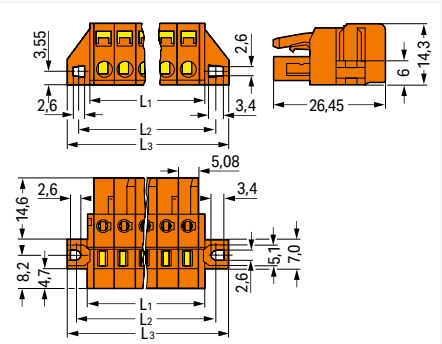

L_1 = (pole no. x pin spacing) + 3 mm
L_2 = (pole no. x pin spacing) + 8.8 mm
L_3 = (pole no. x pin spacing) + 14.8 mm
2- to 3-pole female connectors – one latch only

Mounting type: Feed-through mounting; Panel mounting ▸ Mounting type: Mounting flange ▸ with reinforcing strips



231-306/027-000

Pole number	Item No.	PU
6	231-306/027-000	50
7	231-307/027-000	50
8	231-308/027-000	50
9	231-309/027-000	25
10	231-310/027-000	25
11	231-311/027-000	25
12	231-312/027-000	25
13	231-313/027-000	25
14	231-314/027-000	25
15	231-315/027-000	25
16	231-316/027-000	10
17	231-317/027-000	10
18	231-318/027-000	10
19	231-319/027-000	10
20	231-320/027-000	10
21	231-321/027-000	10
22	231-322/027-000	10
23	231-323/027-000	10
24	231-324/027-000	10

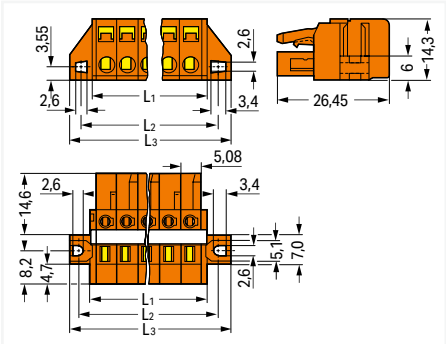

L_1 = (pole no. x pin spacing) + 3 mm
L_2 = (pole no. x pin spacing) + 8.8 mm
L_3 = (pole no. x pin spacing) + 14.8 mm
2- to 3-pole female connectors – one latch only



Female connectors with mounting flanges can be used as PCB through-panel connectors – conductor termination parallel to CAGE CLAMP® actuation.



PCB female connectors with mounting flanges can be used as through-panel connectors for external wiring.

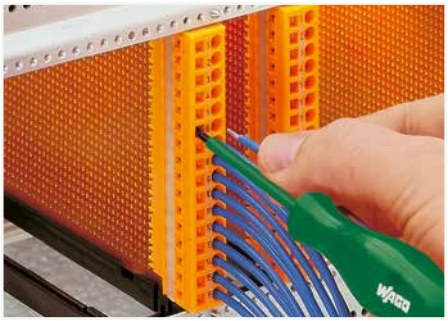

16-pole female connector with mounting flanges in a 19" rack – conductor termination parallel to CAGE CLAMP® actuation

9

PU = packaging unit; SPU = subpackaging unit; Dimensions in mm

Variants:

- Gold-plated or partially gold-plated contact surfaces
- Other versions (or variants) can be requested from WAGO Sales or configured at https://configurator.wago.com/.

1-conductor female connector, angled ▸ *MCS* MIDI Classic ▸ 232 Series

Pin spacing: 5.08 mm / 0.2 inches ▸ Actuation type: Operating tool ▸ CAGE CLAMP® ▸ Color: orange

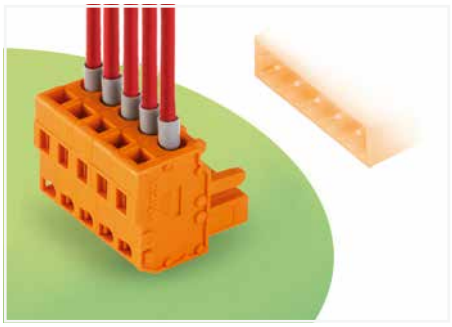

- Universal connection for all conductor types
- Easy cable pre-assembly and on-unit wiring via vertical and horizontal CAGE CLAMP® actuation
- Integrated test ports
- With coding fingers

Derating Curve
1-conductor female connector (231-102/026-000) with THT male header (231-432/001-000)
Pin spacing: 5 mm / Conductor cross-section: 2.5 mm² "f-st"
Based on: EN 60512-5-2 / Reduction factor: 0.8

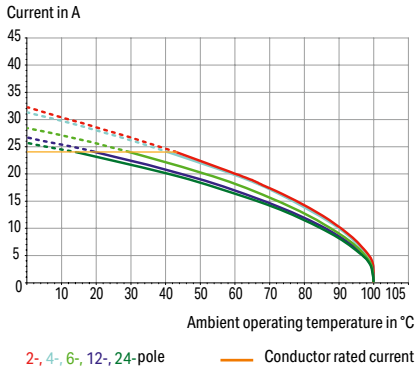

Electrical data			
Ratings per	**IEC/EN 60664-1**		
Overvoltage category	III	III	II
Pollution degree	3	2	2
Nominal voltage	320 V	320 V	630 V
Rated impulse withstand voltage	4 kV	4 kV	4 kV
Rated current	14 A	14 A	14 A
Approvals per	**UL 1059**		
Use group	B	C	D
Rated voltage	300 V	-	300 V
Rated current	15 A	-	10 A
Approvals per	**CSA**		
Use group	B	C	D
Rated voltage	300 V	-	300 V
Rated current	15 A	-	10 A

Connection Data	
Connection technology	CAGE CLAMP®
Strip length	8 … 9 mm / 0.31 … 0.35 inches
Solid conductor	0.08 … 2.5 mm² / 28 … 12 AWG
Fine-stranded conductor	0.08 … 2.5 mm² / 28 … 12 AWG
Fine-stranded conductor; with insulated ferrule	0.25 … 1.5 mm²
Fine-stranded conductor; with uninsulated ferrule	0.25 … 2.5 mm²

Material data	
Material group	I
Insulation material (main housing)	Polyamide (PA66)
Flammability class per UL94	V0
Clamping spring material	Chrome-nickel spring steel (CrNi)
Contact material	Copper alloy
Contact Plating	Tin

Mechanical data	
Design	angled

Environmental requirements	
Limit temperature range	-60 … +85 °C
Processing temperature	-35 … +60 °C

Note:
The *MCS – MULTI CONNECTION SYSTEM* includes connectors without breaking capacity in accordance with DIN EN 61984. When used as intended, these connectors must not be connected/disconnected when live or under load.When used as intended, these connectors must not be connected/disconnected when live or under load. The circuit design should ensure header pins, which can be touched, are not live when unmated.

Cover	Page 816
Ferrule	Page 1081
Insulation stop	Page 817
Jumper	Page 830
Marking	Page 1067
Strain relief	Page 828
Test and measurement	Page 833, 1088
Tool	Page 812
Direct marking	Page 628
See technical section for further information	
Approvals and corresponding ratings, visit www.wago.com	

1-conductor female connector, angled ▸ *MCS* MIDI Classic ▸ 232 Series

Pin spacing: 5.08 mm / 0.2 inches ▸ Actuation type: Operating tool ▸ CAGE CLAMP® ▸ Color: orange

Conductor entry direction to mating direction: 90 °

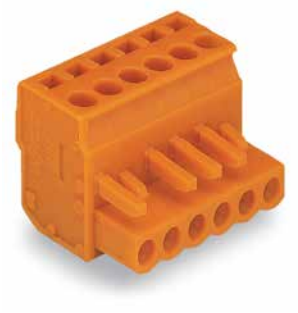

232-406/026-000

Pole number	Item No.	PU
2	232-402/026-000	100
3	232-403/026-000	100
4	232-404/026-000	100
5	232-405/026-000	100
6	232-406/026-000	50
7	232-407/026-000	50
8	232-408/026-000	50
9	232-409/026-000	50
10	232-410/026-000	50
11	232-411/026-000	25
12	232-412/026-000	25
13	232-413/026-000	25
14	232-414/026-000	25
15	232-415/026-000	25
16	232-416/026-000	25
17	232-417/026-000	25
18	232-418/026-000	10
19	232-419/026-000	10
20	232-420/026-000	10
21	232-421/026-000	10
22	232-422/026-000	10
23	232-423/026-000	10
24	232-424/026-000	10

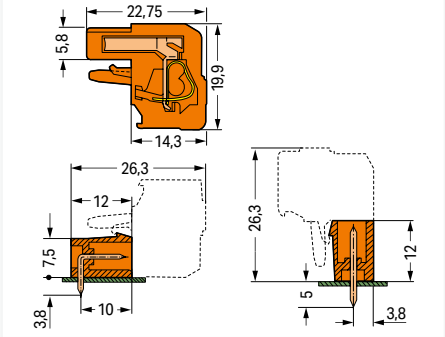

Total length = (pole no. x pin spacing) + 1.5 mm + 0.9 mm
2- to 3-pole female connectors – one latch only

Conductor entry direction to mating direction: 270 °



232-306/026-000

Pole number	Item No.	PU
2	232-302/026-000	100
3	232-303/026-000	100
4	232-304/026-000	100
5	232-305/026-000	100
6	232-306/026-000	50
7	232-307/026-000	50
8	232-308/026-000	50
9	232-309/026-000	50
10	232-310/026-000	50
11	232-311/026-000	25
12	232-312/026-000	25
13	232-313/026-000	25
14	232-314/026-000	25
15	232-315/026-000	25
16	232-316/026-000	25
17	232-317/026-000	25
18	232-318/026-000	10
19	232-319/026-000	10
20	232-320/026-000	10
21	232-321/026-000	10
22	232-322/026-000	10
23	232-323/026-000	10
24	232-324/026-000	10

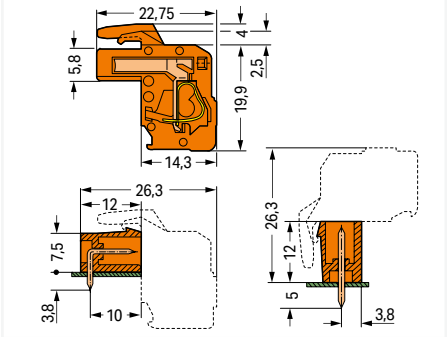

Total length = (pole no. x pin spacing) + 1.5 mm + 0.9 mm
2- to 3-pole female connectors – one latch only

PU = packaging unit; SPU = subpackaging unit; Dimensions in mm

Variants:

- Gold-plated or partially gold-plated contact surfaces
- Other versions (or variants) can be requested from WAGO Sales or configured at https://configurator.wago.com/.

2-conductor female connector ▸ *MCS* MIDI Classic ▸ 231 Series

Pin spacing: 5.08 mm / 0.2 inches ▸ Actuation type: Operating tool ▸ Push-in CAGE CLAMP® ▸ Conductor entry direction to mating direction: 0 ° ▸ Color: orange

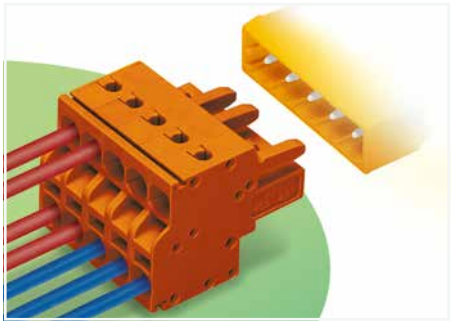

- Universal connection for all conductor types
- Two conductor entries per pole
- For looping through power or data buses
- Bus connection is retained, even when unmated
- Push-in termination of solid and ferruled conductors
- With coding fingers

Derating Curve
2-conductor female connector (231-2102/026-000) with THT male header (231-132/001-000)
Pin spacing: 5 mm / Conductor cross-section: 2.5 mm² "f-st"
Based on: EN 60512-5-2 / Reduction factor: 0.8

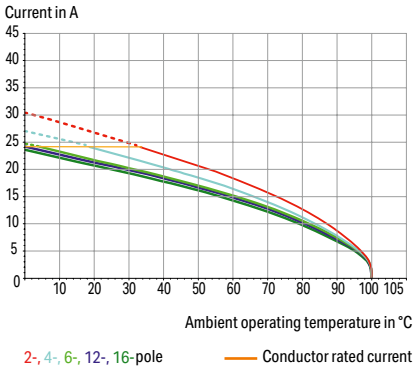

Electrical data			
Ratings per	**IEC/EN 60664-1**		
Overvoltage category	III	III	II
Pollution degree	3	2	2
Nominal voltage	320 V	320 V	630 V
Rated impulse withstand voltage	4 kV	4 kV	4 kV
Rated current	16 A	16 A	16 A
Approvals per	**UL 1059**		
Use group	B	C	D
Rated voltage	300 V	-	300 V
Rated current	20 A	-	10 A
Approvals per	**CSA**		
Use group	B	C	D
Rated voltage	300 V	-	300 V
Rated current	15 A	-	10 A

Connection Data	
Connection technology	Push-in CAGE CLAMP®
Strip length	9 … 10 mm / 0.35 … 0.39 inches
Solid conductor	0.2 … 2.5 mm² / 24 … 12 AWG
Fine-stranded conductor	0.2 … 2.5 mm² / 24 … 12 AWG
Fine-stranded conductor; with insulated ferrule	0.25 … 1.5 mm²
Fine-stranded conductor; with uninsulated ferrule	0.25 … 2.5 mm²

Material data	
Material group	I
Insulation material (main housing)	Polyamide (PA66)
Flammability class per UL94	V0
Clamping spring material	Chrome-nickel spring steel (CrNi)
Contact material	Copper alloy
Contact Plating	Tin

Environmental requirements	
Limit temperature range	-60 … +100 °C
Processing temperature	-35 … +60 °C

Note:
The *MCS – MULTI CONNECTION SYSTEM* includes connectors without breaking capacity in accordance with DIN EN 61984. When used as intended, these connectors must not be connected/disconnected when live or under load.When used as intended, these connectors must not be connected/disconnected when live or under load. The circuit design should ensure header pins, which can be touched, are not live when unmated.

Ferrule	Page 1081
Insulation stop	Page 817
Marking	Page 1067
Strain relief	Page 826
Test and measurement	Page 833
Tool	Page 813, 1072
Direct marking	Page 628
See technical section for further information	
Approvals and corresponding ratings, visit www.wago.com	

2-conductor female connector ▸ *MCS* MIDI Classic ▸ 231 Series

Pin spacing: 5.08 mm / 0.2 inches ▸ Actuation type: Operating tool ▸ Push-in CAGE CLAMP® ▸ Conductor entry direction to mating direction: 0 ° ▸ Color: orange

Plugging without loss of pin spacing

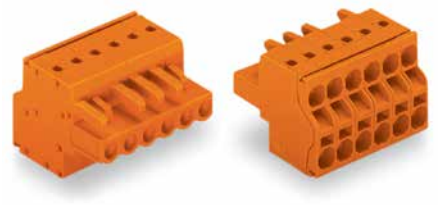

231-2306/026-000

Pole number	Item No.	PU
2	231-2302/026-000	100
3	231-2303/026-000	100
4	231-2304/026-000	100
5	231-2305/026-000	50
6	231-2306/026-000	50
7	231-2307/026-000	50
8	231-2308/026-000	50
9	231-2309/026-000	50
10	231-2310/026-000	50
11	231-2311/026-000	25
12	231-2312/026-000	25
13	231-2313/026-000	25
14	231-2314/026-000	25
15	231-2315/026-000	25
16	231-2316/026-000	25

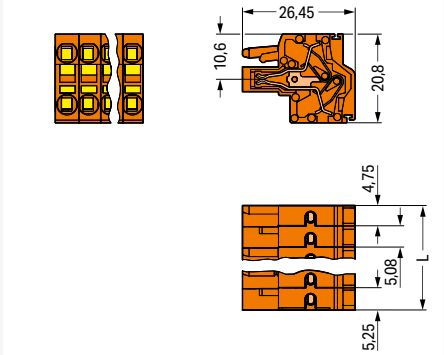

L = (pole no. – 2) x pin spacing + 10 mm
2- to 3-pole female connectors – one latch only

Locking of plug-in connection: Locking lever

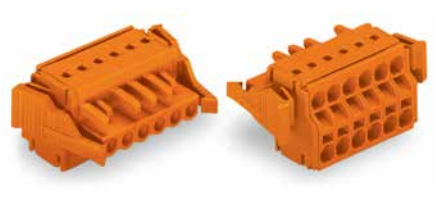

231-2306/037-000

Pole number	Item No.	PU
2	231-2302/037-000	100
3	231-2303/037-000	50
4	231-2304/037-000	50
5	231-2305/037-000	50
6	231-2306/037-000	50
7	231-2307/037-000	50
8	231-2308/037-000	25
9	231-2309/037-000	25
10	231-2310/037-000	25
11	231-2311/037-000	25
12	231-2312/037-000	25
13	231-2313/037-000	25
14	231-2314/037-000	25
15	231-2315/037-000	25
16	231-2316/037-000	10

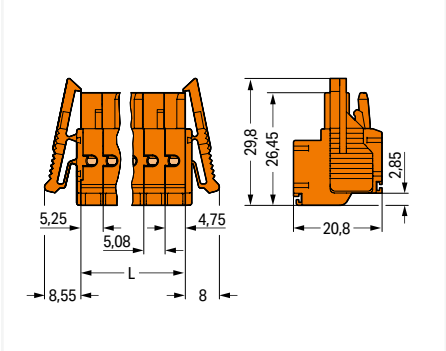

L = (pole no. – 2) x pin spacing + 10 mm
2- to 3-pole female connectors – one latch only

Locking of plug-in connection: Screw flange

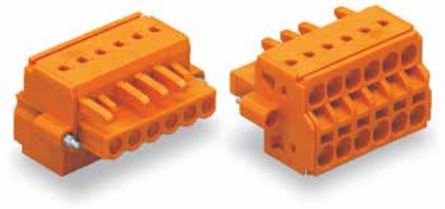

231-2306/107-000

Pole number	Item No.	PU
2	231-2302/107-000	100
3	231-2303/107-000	100
4	231-2304/107-000	50
5	231-2305/107-000	50
6	231-2306/107-000	50
7	231-2307/107-000	50
8	231-2308/107-000	50
9	231-2309/107-000	25
10	231-2310/107-000	25
12	231-2312/107-000	25
14	231-2314/107-000	25
15	231-2315/107-000	25
16	231-2316/107-000	10

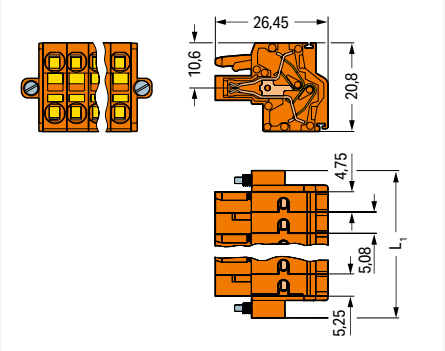

L1 = (pole no. – 2) x pin spacing + 20 mm
2- to 3-pole female connectors – one latch only

9

PU = packaging unit; SPU = subpackaging unit; Dimensions in mm

Variants:

- Gold-plated or partially gold-plated contact surfaces
- Other versions (or variants) can be requested from WAGO Sales or configured at https://configurator.wago.com/.

2-conductor female connector ▸ *MCS* MIDI Classic ▸ 231 Series

Pin spacing: 5.08 mm / 0.2 inches ▸ Actuation type: Operating tool ▸ Push-in CAGE CLAMP® ▸ Conductor entry direction to mating direction: 0 ° ▸ Color: orange

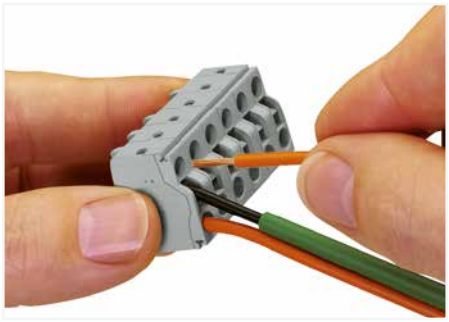

Operating Push-in CAGE CLAMP® is easy, fast and identical to that of CAGE CLAMP®. The screwdriver is fully inserted into the operating slot, holding Push-in CAGE CLAMP® open. After the conductor has been inserted into the clamping unit and the screwdriver been withdrawn, the conductor is clamped safely. Solid and fine-stranded conductors < 0.5 mm² (20 AWG) are terminated and removed using a screwdriver.

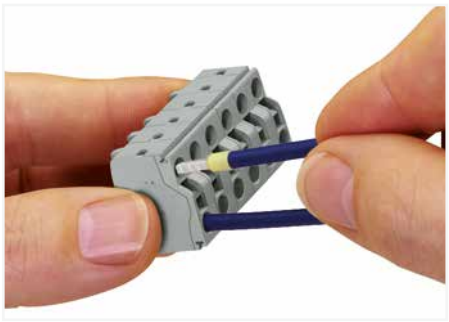

Solid conductors ≥ 0.5 mm² (20 AWG), as well as ferruled, fine-stranded conductors can be terminated by simply pushing them into unit. Integrated test ports allow touch contact with current bar via test probes in both horizontal and vertical directions.

1-conductor female connector ▸ *MCS* MIDI Classic ▸ 2231 Series

Pin spacing: 5.08 mm / 0.2 inches ▸ Actuation type: Push-button ▸ Push-in CAGE CLAMP® ▸ Conductor entry direction to mating direction: 0 ° ▸ Color: orange

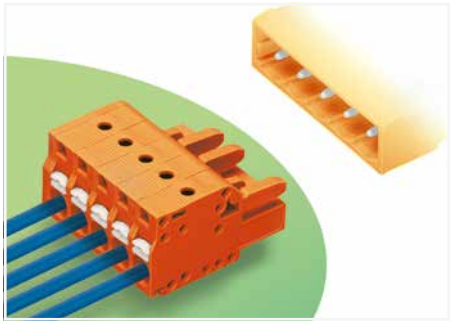

- Universal connection for all conductor types
- Easy-to-use design does not require specialty tools
- Ability to wire while mated
- Push-in termination of solid and ferruled conductors
- Integrated test ports for testing parallel to the conductor entry
- Coding option available

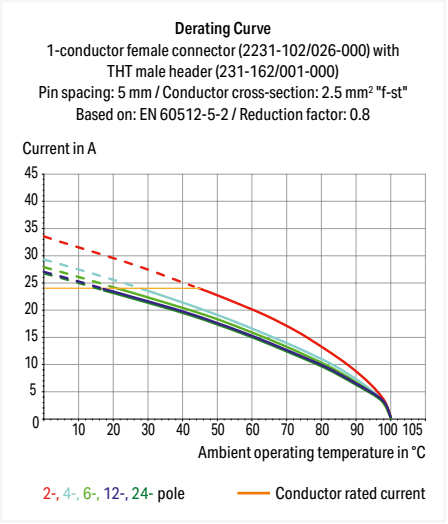

Electrical data			
Ratings per	**IEC/EN 60664-1**		
Overvoltage category	III	III	II
Pollution degree	3	2	2
Nominal voltage	320 V	320 V	630 V
Rated impulse withstand voltage	4 kV	4 kV	4 kV
Rated current	16 A	16 A	16 A
Approvals per	**UL 1059**		
Use group	B	C	D
Rated voltage	300 V	150 V	300 V
Rated current	15 A	15 A	10 A
Approvals per	**CSA**		
Use group	B	C	D
Rated voltage	300 V	150 V	300 V
Rated current	15 A	15 A	10 A

Connection Data	
Connection technology	Push-in CAGE CLAMP®
Strip length	10 … 11 mm / 0.39 … 0.43 inches
Solid conductor	0.2 … 2.5 mm² / 24 … 12 AWG
Fine-stranded conductor	0.2 … 2.5 mm² / 24 … 12 AWG
Fine-stranded conductor; with insulated ferrule	0.25 … 1.5 mm²
Fine-stranded conductor; with uninsulated ferrule	0.25 … 2.5 mm²

Material data	
Material group	I
Insulation material (main housing)	Polyamide (PA66)
Flammability class per UL94	V0
Clamping spring material	Chrome-nickel spring steel (CrNi)
Contact material	Copper alloy
Contact Plating	Tin

Environmental requirements	
Limit temperature range	-60 … +100 °C
Processing temperature	-35 … +60 °C

Note:
The *MCS – MULTI CONNECTION SYSTEM* includes connectors without breaking capacity in accordance with DIN EN 61984. When used as intended, these connectors must not be connected/disconnected when live or under load.When used as intended, these connectors must not be connected/disconnected when live or under load. The circuit design should ensure header pins, which can be touched, are not live when unmated.

Ferrule	Page 1081
Installation	Page 818, 1071
Insulation stop	Page 817
Marking	Page 1067
Mounting adapter	Page 820
Strain relief	Page 826
Test and measurement	Page 833, 1088
Tool	Page 1072
Direct marking	Page 628
Cutout dimensions	Page 632
See technical section for further information	
Approvals and corresponding ratings, visit www.wago.com	

1-conductor female connector ▸ *MCS* MIDI Classic ▸ 2231 Series

Pin spacing: 5.08 mm / 0.2 inches ▸ Actuation type: Push-button ▸ Push-in CAGE CLAMP® ▸ Conductor entry direction to mating direction: 0 ° ▸ Color: orange

	Plugging without loss of pin spacing	Locking of plug-in connection: Locking lever

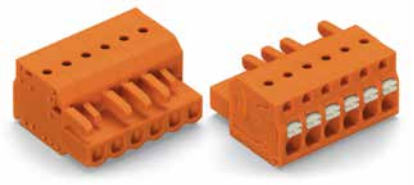

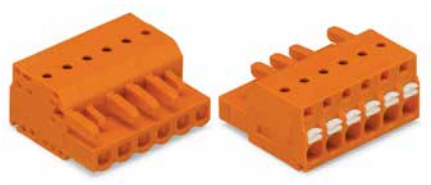



2231-306/026-000

Pole number	Item No.	PU
2	2231-302/026-000	100
3	2231-303/026-000	100
4	2231-304/026-000	100
5	2231-305/026-000	100
6	2231-306/026-000	50
7	2231-307/026-000	50
8	2231-308/026-000	50
9	2231-309/026-000	50
10	2231-310/026-000	50
11	2231-311/026-000	25
12	2231-312/026-000	25
13	2231-313/026-000	25
14	2231-314/026-000	25
15	2231-315/026-000	25
16	2231-316/026-000	25
17	2231-317/026-000	25
18	2231-318/026-000	10
19	2231-319/026-000	10
20	2231-320/026-000	10
21	2231-321/026-000	10
22	2231-322/026-000	10
23	2231-323/026-000	10
24	2231-324/026-000	10

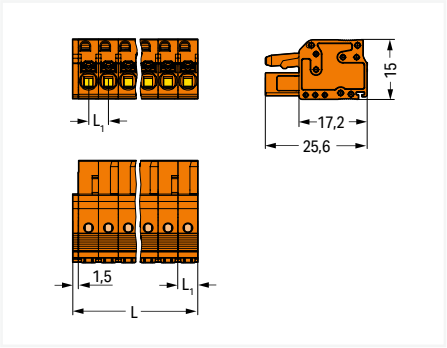

L = (pole no. x pin spacing) + 1.5 mm
L_1 = 5.08 mm
2- to 3-pole female connectors – one latch only

2231-306/102-000

Pole number	Item No.	PU
2	2231-302/102-000	100
3	2231-303/102-000	100
4	2231-304/102-000	100
5	2231-305/102-000	100
6	2231-306/102-000	50
7	2231-307/102-000	50
8	2231-308/102-000	50
9	2231-309/102-000	50
10	2231-310/102-000	50
11	2231-311/102-000	25
12	2231-312/102-000	25
13	2231-313/102-000	25
14	2231-314/102-000	25
15	2231-315/102-000	25
16	2231-316/102-000	25
17	2231-317/102-000	25
18	2231-318/102-000	10
19	2231-319/102-000	10
20	2231-320/102-000	10
21	2231-321/102-000	10
22	2231-322/102-000	10
23	2231-323/102-000	10
24	2231-324/102-000	10

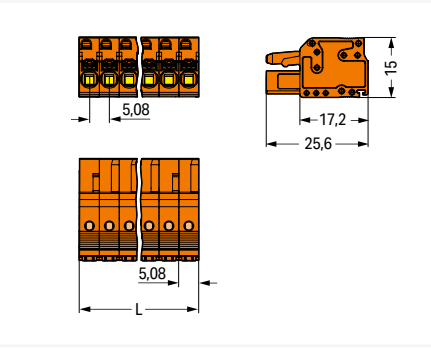

L = pole no. x pin spacing
2- to 3-pole female connectors – one latch only

2231-306/037-000

Pole number	Item No.	PU
2	2231-302/037-000	100
3	2231-303/037-000	50
4	2231-304/037-000	50
5	2231-305/037-000	50
6	2231-306/037-000	50
7	2231-307/037-000	50
8	2231-308/037-000	25
9	2231-309/037-000	25
10	2231-310/037-000	25
11	2231-311/037-000	25
12	2231-312/037-000	25
13	2231-313/037-000	25
14	2231-314/037-000	25
15	2231-315/037-000	25
16	2231-316/037-000	10
17	2231-317/037-000	10
18	2231-318/037-000	10
19	2231-319/037-000	10
20	2231-320/037-000	10
21	2231-321/037-000	10
22	2231-322/037-000	10
23	2231-323/037-000	10
24	2231-324/037-000	10

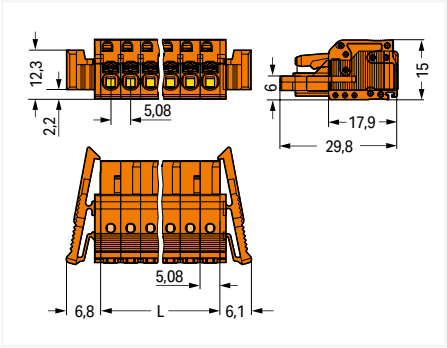

L = pole no. x pin spacing
2- to 3-pole female connectors – one latch only

PU = packaging unit; SPU = subpackaging unit; Dimensions in mm

Variants:

- Gold-plated or partially gold-plated contact surfaces
- Other versions (or variants) can be requested from WAGO Sales or configured at https://configurator.wago.com/.

1-conductor female connector ▸ *MCS* MIDI Classic ▸ 2231 Series

Pin spacing: 5.08 mm / 0.2 inches ▸ Actuation type: Push-button ▸ Push-in CAGE CLAMP® ▸ Conductor entry direction to mating direction: 0 ° ▸ Color: orange

Locking of plug-in connection: Screw flange

Mounting type: Panel mounting ▸ Mounting type: Snap-in foot

Mounting type: Feed-through mounting; Panel mounting ▸ Mounting type: Mounting flange







2231-306/107-000

Pole number	Item No.	PU
2	2231-302/107-000	100
3	2231-303/107-000	100
4	2231-304/107-000	50
5	2231-305/107-000	50
6	2231-306/107-000	50
7	2231-307/107-000	50
8	2231-308/107-000	50
9	2231-309/107-000	25
10	2231-310/107-000	25
12	2231-312/107-000	25
14	2231-314/107-000	25
15	2231-315/107-000	25
16	2231-316/107-000	10

2231-306/008-000

Pole number	Item No.	PU
2	2231-302/008-000	100
3	2231-303/008-000	100
4	2231-304/008-000	100
5	2231-305/008-000	100
6	2231-306/008-000	50
7	2231-307/008-000	50
8	2231-308/008-000	50
9	2231-309/008-000	50
10	2231-310/008-000	50
11	2231-311/008-000	25
12	2231-312/008-000	25
13	2231-313/008-000	25
14	2231-314/008-000	25
15	2231-315/008-000	25
16	2231-316/008-000	25
17	2231-317/008-000	25
18	2231-318/008-000	10
19	2231-319/008-000	10
20	2231-320/008-000	10
21	2231-321/008-000	10
22	2231-322/008-000	10
23	2231-323/008-000	10
24	2231-324/008-000	10

2231-306/031-000

Pole number	Item No.	PU
2	2231-302/031-000	100
3	2231-303/031-000	50
4	2231-304/031-000	50
5	2231-305/031-000	50
6	2231-306/031-000	50
7	2231-307/031-000	50
8	2231-308/031-000	50
9	2231-309/031-000	50
10	2231-310/031-000	25
11	2231-311/031-000	25
12	2231-312/031-000	25
13	2231-313/031-000	25
14	2231-314/031-000	25
15	2231-315/031-000	25
16	2231-316/031-000	10
17	2231-317/031-000	10
18	2231-318/031-000	10
19	2231-319/031-000	10
20	2231-320/031-000	10
21	2231-321/031-000	10
22	2231-322/031-000	10
23	2231-323/031-000	10
24	2231-324/031-000	10

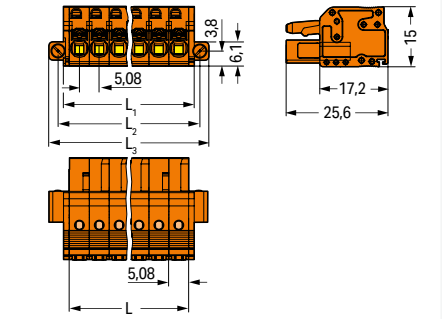

L = pole no. x pin spacing
L_1 = L + 2.8 mm
L_2 = L + 5.4 mm
L_3 = L + 10 mm
2- to 3-pole female connectors – one latch only

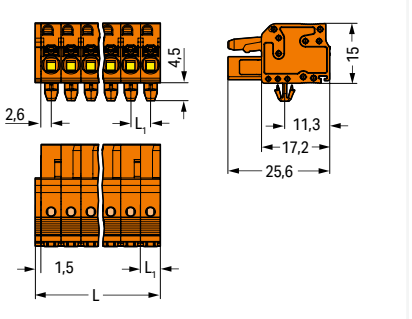

L = (pole no. x pin spacing) + 1.5 mm
L_1 = 5.08 mm
2- to 3-pole female connectors – one latch only

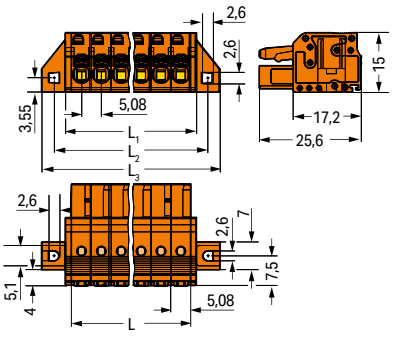

L = pole no. x pin spacing
L_1 = L + 2.8 mm
L_2 = L + 8.8 mm
L_3 = L + 14.8 mm
2- to 3-pole female connectors – one latch only

PU = packaging unit; SPU = subpackaging unit; Dimensions in mm

Variants:
- Gold-plated or partially gold-plated contact surfaces
- Other versions (or variants) can be requested from WAGO Sales or configured at https://configurator.wago.com/.

1-conductor male connector ▸ *MCS* MIDI Classic ▸ 231 Series

Pin spacing: 5.08 mm / 0.2 inches ▸ Actuation type: Operating tool ▸ CAGE CLAMP® ▸ Conductor entry direction to mating direction: 0 ° ▸ Color: orange

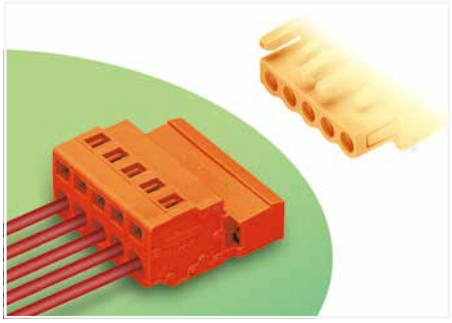

- Universal connection for all conductor types
- Easy cable pre-assembly and on-unit wiring via vertical and horizontal CAGE CLAMP® actuation
- For wire-to-wire and board-to-wire connections
- Versions available with snap-in mounting feet or flanges for panel or through-panel mounting
- With coding fingers

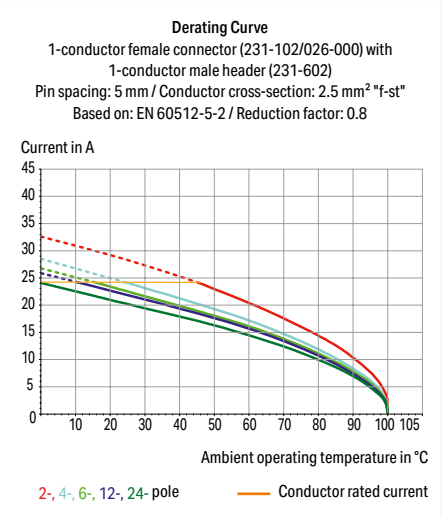

Electrical data			
Ratings per	**IEC/EN 60664-1**		
Overvoltage category	III	III	II
Pollution degree	3	2	2
Nominal voltage	320 V	320 V	630 V
Rated impulse withstand voltage	4 kV	4 kV	4 kV
Rated current	12 A	12 A	12 A
Approvals per	**UL 1059**		
Use group	B	C	D
Rated voltage	300 V	-	300 V
Rated current	15 A	-	10 A
Approvals per	**CSA**		
Use group	B	C	D
Rated voltage	300 V	-	300 V
Rated current	15 A	-	10 A

Connection Data	
Connection technology	CAGE CLAMP®
Strip length	8 … 9 mm / 0.31 … 0.35 inches
Solid conductor	0.08 … 2.5 mm² / 28 … 12 AWG
Fine-stranded conductor	0.08 … 2.5 mm² / 28 … 12 AWG
Fine-stranded conductor; with insulated ferrule	0.25 … 1.5 mm²
Fine-stranded conductor; with uninsulated ferrule	0.25 … 2.5 mm²

Material data	
Material group	I
Insulation material (main housing)	Polyamide (PA66)
Flammability class per UL94	V0
Clamping spring material	Chrome-nickel spring steel (CrNi)
Contact material	Electrolytic copper (E_{Cu})
Contact Plating	Tin

Environmental requirements	
Limit temperature range	-60 … +100 °C
Processing temperature	-35 … +60 °C

Note:
The *MCS – MULTI CONNECTION SYSTEM* includes connectors without breaking capacity in accordance with DIN EN 61984. When used as intended, these connectors must not be connected/disconnected when live or under load.When used as intended, these connectors must not be connected/disconnected when live or under load. The circuit design should ensure header pins, which can be touched, are not live when unmated.

Coding	Page 814
Cover	Page 816
Ferrule	Page 1081
Installation	Page 818, 1071
Insulation stop	Page 817
Jumper	Page 830
Marking	Page 1067
Mounting adapter	Page 820
Strain relief	Page 828
Tool	Page 812, 1072
Direct marking	Page 628
Cutout dimensions	Page 632
See technical section for further information	
Approvals and corresponding ratings, visit www.wago.com	

1-conductor male connector ▸ *MCS* MIDI Classic ▸ 231 Series

Pin spacing: 5.08 mm / 0.2 inches ▸ Actuation type: Operating tool ▸ CAGE CLAMP® ▸ Conductor entry direction to mating direction: 0 ° ▸ Color: orange

	Locking of plug-in connection: Threaded flange	Mounting type: Panel mounting ▸ Mounting type: Snap-in foot







231-636

Pole number	Item No.	PU
2	231-632	100
3	231-633	100
4	231-634	100
5	231-635	50
6	231-636	50
7	231-637	50
8	231-638	50
9	231-639	50
10	231-640	50
11	231-641	25
12	231-642	25
13	231-643	25
14	231-644	25
15	231-645	25
16	231-646	25
17	231-647	25
18	231-648	10
19	231-649	10
20	231-650	10
21	231-651	10
22	231-652	10
23	231-653	10
24	231-654	10

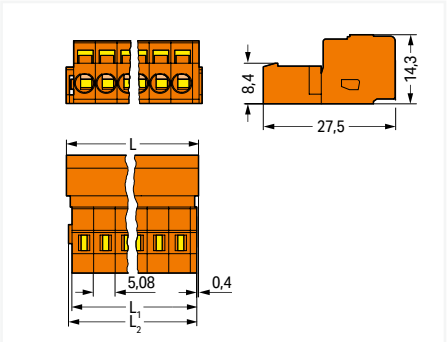

L = (pole no. – 1) x pin spacing + 8.2 mm
L_1 = L – 1.7 mm
L_2 = L – 1.2 mm

231-636/109-000

Pole number	Item No.	PU
2	231-632/109-000	100
3	231-633/109-000	50
4	231-634/109-000	50
5	231-635/109-000	50
6	231-636/109-000	50
7	231-637/109-000	50
8	231-638/109-000	50
9	231-639/109-000	25
10	231-640/109-000	25
12	231-642/109-000	25
14	231-644/109-000	25
15	231-645/109-000	25
16	231-646/109-000	10

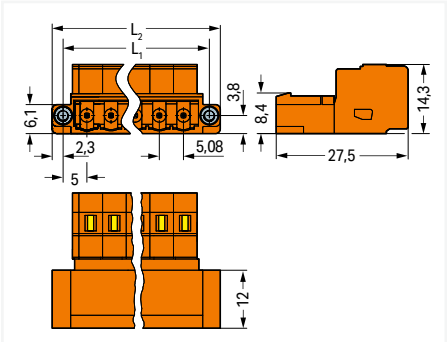

L_1 = (pole no. x pin spacing) + 5.4 mm
L_2 = (pole no. x pin spacing) + 10 mm

231-636/018-000

Pole number	Item No.	PU
2	231-632/018-000	100
3	231-633/018-000	100
4	231-634/018-000	100
5	231-635/018-000	50
6	231-636/018-000	50
7	231-637/018-000	50
8	231-638/018-000	50
9	231-639/018-000	50
10	231-640/018-000	50
11	231-641/018-000	25
12	231-642/018-000	25
13	231-643/018-000	25
14	231-644/018-000	25
15	231-645/018-000	25
16	231-646/018-000	25
17	231-647/018-000	25
18	231-648/018-000	10
19	231-649/018-000	10
20	231-650/018-000	10
21	231-651/018-000	10
22	231-652/018-000	10
23	231-653/018-000	10
24	231-654/018-000	10

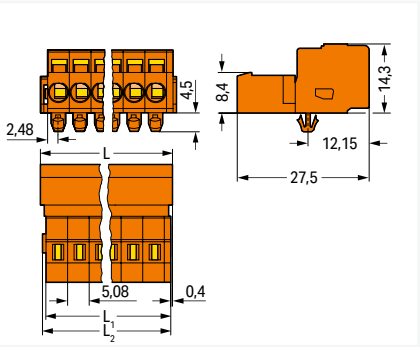

L = (pole no. – 1) x pin spacing + 8.2 mm
L_1 = L – 1.7 mm
L_2 = L – 1.2 mm

PU = packaging unit; SPU = subpackaging unit; Dimensions in mm

Variants:
- Other pole numbers
- Gold-plated or partially gold-plated contact surfaces
- Other versions (or variants) can be requested from WAGO Sales or configured at https://configurator.wago.com/.

1-conductor male connector ▸ *MCS* MIDI Classic ▸ 231 Series

Pin spacing: 5.08 mm / 0.2 inches ▸ Actuation type: Operating tool ▸ CAGE CLAMP® ▸ Conductor entry direction to mating direction: 0 ° ▸ Color: orange

Mounting type: Feed-through mounting; Panel mounting ▸ Mounting type: Mounting flange

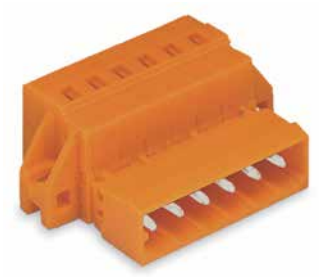

231-636/019-000

Pole number	Item No.	PU
2	231-632/019-000	100
3	231-633/019-000	50
4	231-634/019-000	50
5	231-635/019-000	50
6	231-636/019-000	50
7	231-637/019-000	50
8	231-638/019-000	50
9	231-639/019-000	25
10	231-640/019-000	25
11	231-641/019-000	25
12	231-642/019-000	25
13	231-643/019-000	25
14	231-644/019-000	25
15	231-645/019-000	25
16	231-646/019-000	10
17	231-647/019-000	10
18	231-648/019-000	10
19	231-649/019-000	10
20	231-650/019-000	10
21	231-651/019-000	10
22	231-652/019-000	10
23	231-653/019-000	10
24	231-654/019-000	10

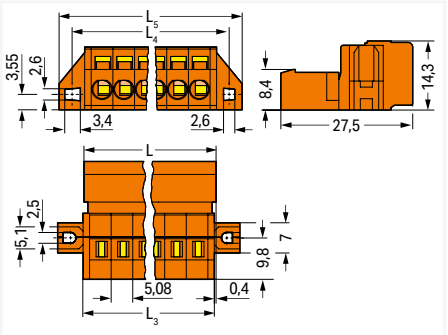

L = (pole no. – 1) x pin spacing + 8.2 mm
L_3 = L – 0.2 mm
L_4 = L3 + 5.8 mm
L_5 = L3 + 11.8 mm

Mounting type: Feed-through mounting ▸ Mounting type: Snap-in flange



231-636/114-000

Pole number	Item No.	PU
2	231-632/114-000	50
3	231-633/114-000	50
4	231-634/114-000	50
5	231-635/114-000	50
6	231-636/114-000	50
7	231-637/114-000	25
8	231-638/114-000	25
9	231-639/114-000	25
10	231-640/114-000	25
11	231-641/114-000	25
12	231-642/114-000	25
13	231-643/114-000	25
14	231-644/114-000	25
15	231-645/114-000	10
16	231-646/114-000	10
17	231-647/114-000	10
18	231-648/114-000	10
19	231-649/114-000	10
20	231-650/114-000	10
21	231-651/114-000	10
22	231-652/114-000	10
23	231-653/114-000	10
24	231-654/114-000	10

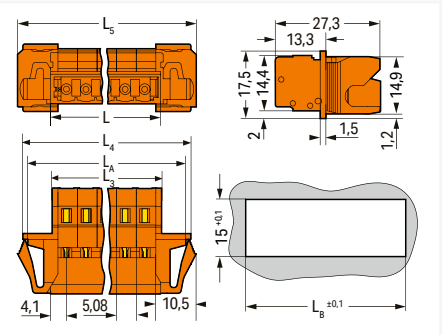

L = (pole no. x pin spacing) + 3.2 mm
L_3 = L – 0.2 mm
L_4 = L_3 + 15.2 mm
L_5 = L_3 + 18 mm
L_A = L_3 + 12.6 mm
L_B = L_3 + 13.2 mm

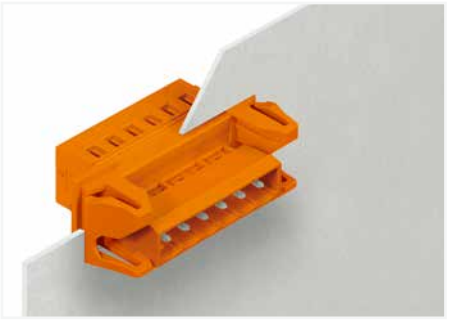

Male connector, with snap-in flanges, for feedthrough applications, for 0.5 … 2.5 mm plate thickness

PU = packaging unit; SPU = subpackaging unit; Dimensions in mm

Variants:
- Other pole numbers
- Gold-plated or partially gold-plated contact surfaces
- Other versions (or variants) can be requested from WAGO Sales or configured at https://configurator.wago.com/.

1-conductor male connector ▸ *MCS* MIDI Classic ▸ 231 Series

Pin spacing: 5.08 mm / 0.2 inches ▸ Actuation type: Operating tool ▸ CAGE CLAMP® ▸ Conductor entry direction to mating direction: 0 ° ▸ Color: orange

Mounting type: Feed-through mounting ▸ Mounting type: Snap-in flange ▸ Locking of plug-in connection: Threaded flange



231-636/129-000

Pole number	Item No.	PU
2	**231-632/129-000**	50
3	**231-633/129-000**	50
4	**231-634/129-000**	50
5	**231-635/129-000**	50
6	**231-636/129-000**	50
7	**231-637/129-000**	25
8	**231-638/129-000**	25
9	**231-639/129-000**	25
10	**231-640/129-000**	25
12	**231-642/129-000**	25
14	**231-644/129-000**	25
15	**231-645/129-000**	10
16	**231-646/129-000**	10

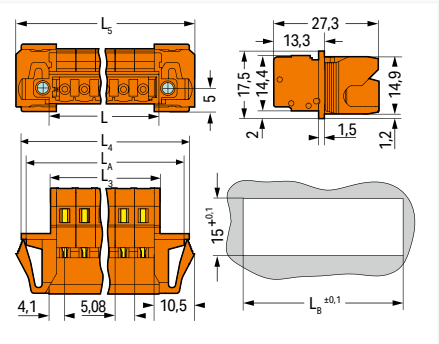

L = (pole no. x pin spacing) + 3.2 mm
L_3 = L – 0.2 mm
L_4 = L_3 + 15.2 mm
L_5 = L_3 + 18 mm
L_A = L_3 + 12.6 mm
L_B = L_3 + 13.2 mm

PU = packaging unit; SPU = subpackaging unit; Dimensions in mm

Variants:
- Other pole numbers
- Gold-plated or partially gold-plated contact surfaces
- Other versions (or variants) can be requested from WAGO Sales or configured at https://configurator.wago.com/.

THT female header ▸ *MCS* MIDI Classic ▸ 232 Series

Pin spacing: 5.08 mm / 0.2 inches ▸ Solder pin dimensions: 0.6 x 1 mm ▸ Solder pin length: 5 mm ▸ Color: orange

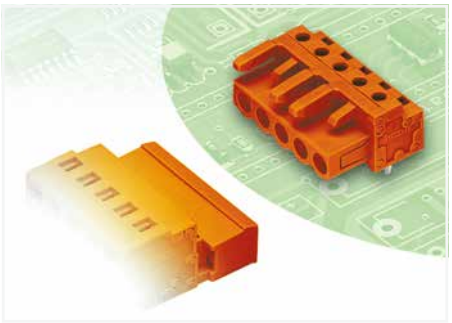

- Horizontal or vertical PCB mounting via straight or angled solder pins
- For board-to-board and board-to-wire connections
- Touch-proof PCB outputs
- Easy-to-identify PCB inputs and outputs
- With coding fingers

Derating Curve
THT female header (232-232) with
1-conductor male connector (231-602)
Pin spacing: 5 mm / Conductor cross-section: 2.5 mm² "f-st"
Based on: EN 60512-5-2 / Reduction factor: 0.8

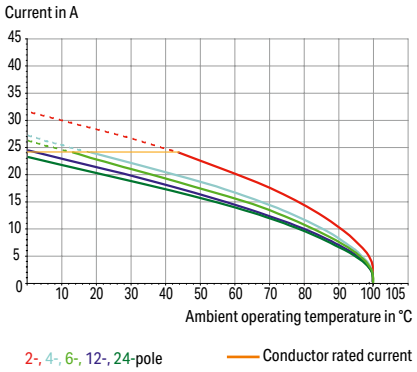

Electrical data			
Ratings per	**IEC/EN 60664-1**		
Overvoltage category	III	III	II
Pollution degree	3	2	2
Nominal voltage	320 V	320 V	630 V
Rated impulse withstand voltage	4 kV	4 kV	4 kV
Rated current	12 A	12 A	12 A
Approvals per	**UL 1059**		
Use group	B	C	D
Rated voltage	300 V	-	300 V
Rated current	15 A	-	10 A
Approvals per	**CSA**		
Use group	B	C	D
Rated voltage	300 V	-	300 V
Rated current	15 A	-	10 A

Material data	
Material group	I
Insulation material (main housing)	Polyamide (PA66)
Flammability class per UL94	V0
Contact material	Copper alloy
Contact Plating	Tin

Mechanical data	
Solder pin arrangement	over the entire female connector (in-line)
Number of solder pins per potential	1
Solder pin length	5 mm
Solder pin dimensions	0.6 x 1 mm
Drilled hole diameter	1.3 $^{(+0.1)}$ mm

Environmental requirements	
Limit temperature range	-60 … +100 °C
Processing temperature	-35 … +60 °C

Note:
The *MCS – MULTI CONNECTION SYSTEM* includes connectors without breaking capacity in accordance with DIN EN 61984. When used as intended, these connectors must not be connected/disconnected when live or under load.When used as intended, these connectors must not be connected/disconnected when live or under load. The circuit design should ensure header pins, which can be touched, are not live when unmated.

Installation	Page 818, 1071
Test and measurement	Page 833, 1088
Cutout dimensions	Page 632
See technical section for further information	
Approvals and corresponding ratings, visit www.wago.com	

THT female header ▸ *MCS* MIDI Classic ▸ 232 Series

Pin spacing: 5.08 mm / 0.2 inches ▸ Solder pin dimensions: 0.6 x 1 mm ▸ Solder pin length: 5 mm ▸ Color: orange

Mating direction to the PCB: 0 °



232-266

Pole number	Item No.	PU
2	232-262	100
3	232-263	100
4	232-264	100
5	232-265	100
6	232-266	50
7	232-267	50
8	232-268	50
9	232-269	50
10	232-270	50
11	232-271	25
12	232-272	25
13	232-273	25
14	232-274	25
15	232-275	25
16	232-276	25
17	232-277	25
18	232-278	25
19	232-279	10
20	232-280	10
21	232-281	10
22	232-282	10
23	232-283	10
24	232-284	10

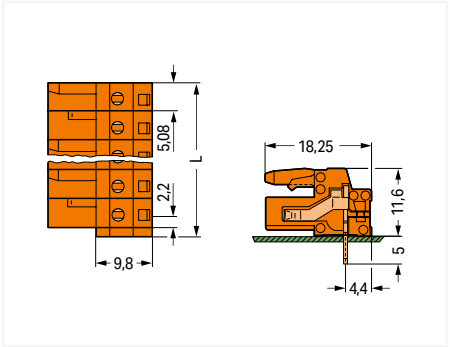

L = (pole no. x pin spacing) + 1.5 mm
Distance to first solder pin: 2.2 mm
2- to 3-pole female connectors – one latch only

Mating direction to the PCB: 90 °



232-166

Pole number	Item No.	PU
2	232-162	100
3	232-163	100
4	232-164	100
5	232-165	100
6	232-166	50
7	232-167	50
8	232-168	50
9	232-169	50
10	232-170	50
11	232-171	25
12	232-172	25
13	232-173	25
14	232-174	25
15	232-175	25
16	232-176	25
17	232-177	25
18	232-178	25
19	232-179	10
20	232-180	10
21	232-181	10
22	232-182	10
23	232-183	10
24	232-184	10

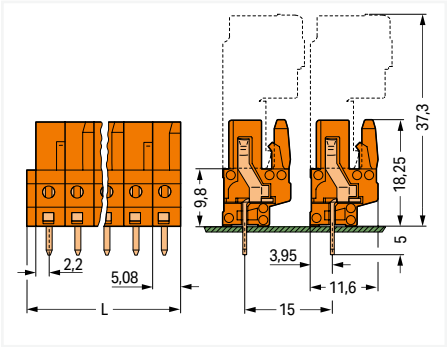

L = (pole no. x pin spacing) + 1.5 mm
2- to 3-pole female connectors – one latch only

Locking of plug-in connection: Locking lever ▸ Mating direction to the PCB: 0 °



232-266/039-000

Pole number	Item No.	PU
2	232-262/039-000	100
3	232-263/039-000	50
4	232-264/039-000	50
5	232-265/039-000	50
6	232-266/039-000	50
7	232-267/039-000	50
8	232-268/039-000	50
9	232-269/039-000	25
10	232-270/039-000	25
11	232-271/039-000	25
12	232-272/039-000	25
13	232-273/039-000	25
14	232-274/039-000	25
15	232-275/039-000	25
16	232-276/039-000	10
17	232-277/039-000	10
18	232-278/039-000	10
19	232-279/039-000	10
20	232-280/039-000	10
21	232-281/039-000	10
22	232-282/039-000	10
23	232-283/039-000	10
24	232-284/039-000	10

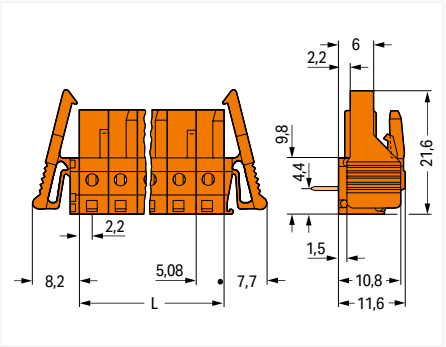

L = pole no. x pin spacing
Distance to first solder pin: 2.2 mm
2- to 3-pole female connectors – one latch only

PU = packaging unit; SPU = subpackaging unit; Dimensions in mm

Variants:

- Other pole numbers
- 3.8 mm pin projection for male headers with straight solder pins
- Gold-plated or partially gold-plated contact surfaces
- Other versions (or variants) can be requested from WAGO Sales or configured at https://configurator.wago.com/.

THT female header ▸ *MCS* MIDI Classic ▸ 232 Series

Pin spacing: 5.08 mm / 0.2 inches ▸ Solder pin dimensions: 0.6 x 1 mm ▸ Solder pin length: 5 mm ▸ Color: orange

Locking of plug-in connection: Locking lever ▸ Mating direction to the PCB: 90 °



232-166/039-000

Pole number	Item No.	PU
2	232-162/039-000	100
3	232-163/039-000	50
4	232-164/039-000	50
5	232-165/039-000	50
6	232-166/039-000	50
7	232-167/039-000	50
8	232-168/039-000	50
9	232-169/039-000	25
10	232-170/039-000	25
11	232-171/039-000	25
12	232-172/039-000	25
13	232-173/039-000	25
14	232-174/039-000	25
15	232-175/039-000	25
16	232-176/039-000	10
17	232-177/039-000	10
18	232-178/039-000	10
19	232-179/039-000	10
20	232-180/039-000	10
21	232-181/039-000	10
22	232-182/039-000	10
23	232-183/039-000	10
24	232-184/039-000	10

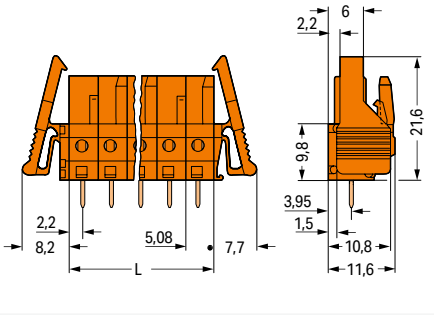

L = pole no. x pin spacing
2- to 3-pole female connectors – one latch only

Mounting type: Feed-through mounting; Panel mounting ▸ Mounting type: Mounting flange ▸ Mating direction to the PCB: 0 °



232-266/031-000

Pole number	Item No.	PU
2	232-262/031-000	100
3	232-263/031-000	50
4	232-264/031-000	50
5	232-265/031-000	50
6	232-266/031-000	50
7	232-267/031-000	50
8	232-268/031-000	50
9	232-269/031-000	25
10	232-270/031-000	25
11	232-271/031-000	25
12	232-272/031-000	25
13	232-273/031-000	25
14	232-274/031-000	25
15	232-275/031-000	25
16	232-276/031-000	10
17	232-277/031-000	10
18	232-278/031-000	10
19	232-279/031-000	10
20	232-280/031-000	10
21	232-281/031-000	10
22	232-282/031-000	10
23	232-283/031-000	10
24	232-284/031-000	10

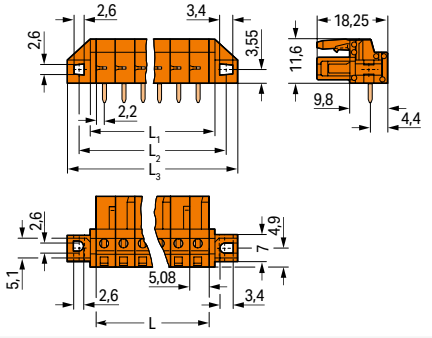

L = pole no. x pin spacing
L_1 = L + 3 mm
L_2 = L + 8.8 mm
L_3 = L + 14.8 mm
2- to 3-pole female connectors – one latch only

Mounting type: Feed-through mounting; Panel mounting ▸ Mounting type: Mounting flange ▸ Mating direction to the PCB: 90 °



232-166/031-000

Pole number	Item No.	PU
2	232-162/031-000	100
3	232-163/031-000	50
4	232-164/031-000	50
5	232-165/031-000	50
6	232-166/031-000	50
7	232-167/031-000	50
8	232-168/031-000	50
9	232-169/031-000	25
10	232-170/031-000	25
11	232-171/031-000	25
12	232-172/031-000	25
13	232-173/031-000	25
14	232-174/031-000	25
15	232-175/031-000	25
16	232-176/031-000	10
17	232-177/031-000	10
18	232-178/031-000	10
19	232-179/031-000	10
20	232-180/031-000	10
21	232-181/031-000	10
22	232-182/031-000	10
23	232-183/031-000	10
24	232-184/031-000	10

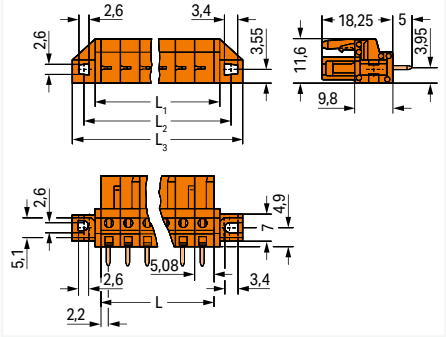

L = pole no. x pin spacing
L_1 = L + 3 mm
L_2 = L + 8.8 mm
L_3 = L + 14.8 mm
2- to 3-pole female connectors – one latch only

PU = packaging unit; SPU = subpackaging unit; Dimensions in mm

Variants:
- Other pole numbers
- 3.8 mm pin projection for male headers with straight solder pins
- Gold-plated or partially gold-plated contact surfaces
- Other versions (or variants) can be requested from WAGO Sales or configured at https://configurator.wago.com/.

THT female header ▸ *MCS* MIDI Classic ▸ 232 Series

Pin spacing: 5.08 mm / 0.2 inches ▸ Solder pin dimensions: 0.6 x 1 mm ▸ Solder pin length: 5 mm ▸ Color: orange

Mounting type: Flush feed-through mounting; Panel mounting ▸ Mounting type: Mounting flange ▸ Mating direction to the PCB: 0 °



232-266/047-000

Pole number	Item No.	PU
2	232-262/047-000	100
3	232-263/047-000	50
4	232-264/047-000	50
5	232-265/047-000	50
6	232-266/047-000	50
7	232-267/047-000	50
8	232-268/047-000	50
9	232-269/047-000	25
10	232-270/047-000	25
11	232-271/047-000	25
12	232-272/047-000	25
13	232-273/047-000	25
14	232-274/047-000	25
15	232-275/047-000	25
16	232-276/047-000	10
17	232-277/047-000	10
18	232-278/047-000	10
19	232-279/047-000	10
20	232-280/047-000	10
21	232-281/047-000	10
22	232-282/047-000	10
23	232-283/047-000	10
24	232-284/047-000	10

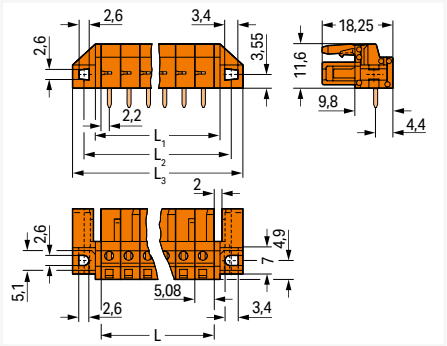

L = pole no. x pin spacing
L_1 = L + 3 mm
L_2 = L + 8.8 mm
L_3 = L + 14.8 mm
2- to 3-pole female connectors – one latch only

Mounting type: Flush feed-through mounting; Panel mounting ▸ Mounting type: Mounting flange ▸ Mating direction to the PCB: 90 °



232-166/047-000

Pole number	Item No.	PU
2	232-162/047-000	100
3	232-163/047-000	50
4	232-164/047-000	50
5	232-165/047-000	50
6	232-166/047-000	50
7	232-167/047-000	50
8	232-168/047-000	50
9	232-169/047-000	25
10	232-170/047-000	25
11	232-171/047-000	25
12	232-172/047-000	25
13	232-173/047-000	25
14	232-174/047-000	25
15	232-175/047-000	25
16	232-176/047-000	10
17	232-177/047-000	10
18	232-178/047-000	10
19	232-179/047-000	10
20	232-180/047-000	10
21	232-181/047-000	10
22	232-182/047-000	10
23	232-183/047-000	10
24	232-184/047-000	10

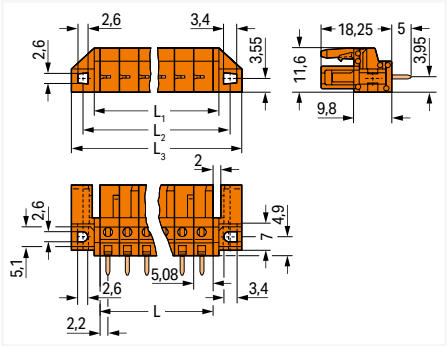

L = pole no. x pin spacing
L_1 = L + 3 mm
L_2 = L + 8.8 mm
L_3 = L + 14.8 mm
2- to 3-pole female connectors – one latch only

PU = packaging unit; SPU = subpackaging unit; Dimensions in mm

Variants:
- Other pole numbers
- 3.8 mm pin projection for male headers with straight solder pins
- Gold-plated or partially gold-plated contact surfaces
- Other versions (or variants) can be requested from WAGO Sales or configured at https://configurator.wago.com/.

THT male header ▸ *MCS* MIDI Classic ▸ 231 Series

Pin spacing: 5.08 mm / 0.2 inches ▸ Solder pin dimensions: 1 x 1 mm ▸ Color: orange

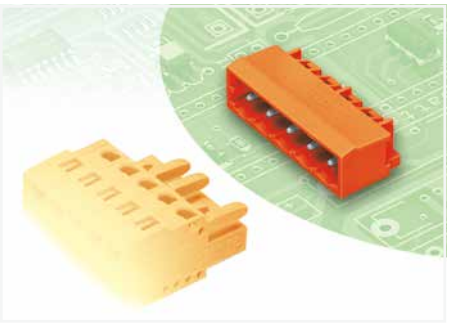

- Horizontal or vertical PCB mounting via straight or angled solder pins
- Pin cross-section: 1 x 1 mm
- With coding fingers

Derating Curve
1-conductor female connector (231-102/026-000) with
THT male header (231-462/001-000)
Pin spacing: 5 mm / Conductor cross-section: 2.5 mm² "f-st"
Based on: EN 60512-5-2 / Reduction factor: 0.8

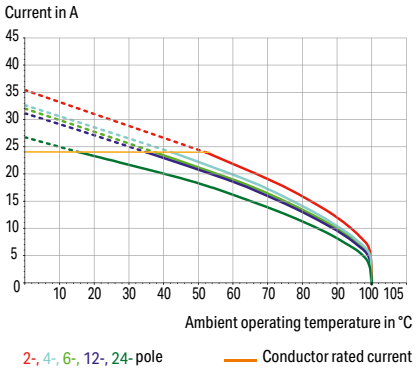

Electrical data			
Ratings per	**IEC/EN 60664-1**		
Overvoltage category	III	III	II
Pollution degree	3	2	2
Nominal voltage	320 V	320 V	630 V
Rated impulse withstand voltage	4 kV	4 kV	4 kV
Rated current	12 A	12 A	12 A
Approvals per	**UL 1059**		
Use group	B	C	D
Rated voltage	300 V	-	300 V
Rated current	10 A	-	10 A
Approvals per	**CSA**		
Use group	B	C	D
Rated voltage	300 V	-	300 V
Rated current	10 A	-	10 A

Material data	
Material group	I
Insulation material (main housing)	Polyamide (PA66)
Flammability class per UL94	V0
Contact material	Electrolytic copper (E_{Cu})
Contact Plating	Tin

Mechanical data	
Solder pin arrangement	over the entire male connector (in-line)
Number of solder pins per potential	1
Solder pin dimensions	1 x 1 mm
Drilled hole diameter	1.4 $^{(+0.1)}$ mm

Environmental requirements	
Limit temperature range	-60 … +100 °C
Processing temperature	-35 … +60 °C

Note:
The *MCS – MULTI CONNECTION SYSTEM* includes connectors without breaking capacity in accordance with DIN EN 61984. When used as intended, these connectors must not be connected/disconnected when live or under load.When used as intended, these connectors must not be connected/disconnected when live or under load. The circuit design should ensure header pins, which can be touched, are not live when unmated.

Coding Page 814
Installation Page 818
See technical section for further information
Approvals and corresponding ratings, visit www.wago.com

THT male header ▸ *MCS* MIDI Classic ▸ 231 Series

Pin spacing: 5.08 mm / 0.2 inches ▸ Solder pin dimensions: 1 x 1 mm ▸ Color: orange

Mating direction to the PCB: 0 ° ▸ Solder pin length: 3.8 mm

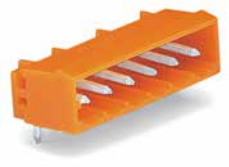

231-536/001-000

Pole number	Item No.	PU
2	231-532/001-000	200
3	231-533/001-000	200
4	231-534/001-000	200
5	231-535/001-000	200
6	231-536/001-000	100
7	231-537/001-000	100
8	231-538/001-000	100
9	231-539/001-000	100
10	231-540/001-000	100
11	231-541/001-000	100
12	231-542/001-000	100
13	231-543/001-000	50
14	231-544/001-000	50
15	231-545/001-000	50
16	231-546/001-000	50
17	231-547/001-000	50
18	231-548/001-000	50
19	231-549/001-000	50
20	231-550/001-000	50
21	231-551/001-000	50
22	231-552/001-000	50
23	231-553/001-000	50
24	231-554/001-000	50

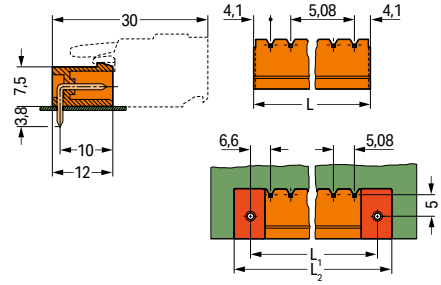

L = (pole no. – 1) x pin spacing + 8.2 mm
L_1 = L + 5 mm
L_2 = L_1 + 7.4 mm

Mating direction to the PCB: 90 ° ▸ Solder pin length: 5 mm

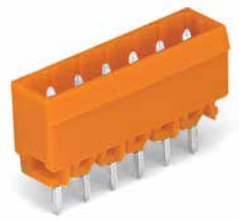

231-336/001-000

Pole number	Item No.	PU
2	231-332/001-000	200
3	231-333/001-000	200
4	231-334/001-000	200
5	231-335/001-000	200
6	231-336/001-000	100
7	231-337/001-000	100
8	231-338/001-000	100
9	231-339/001-000	100
10	231-340/001-000	100
11	231-341/001-000	100
12	231-342/001-000	100
13	231-343/001-000	50
14	231-344/001-000	50
15	231-345/001-000	50
16	231-346/001-000	50
17	231-347/001-000	50
18	231-348/001-000	50
19	231-349/001-000	50
20	231-350/001-000	50
21	231-351/001-000	50
22	231-352/001-000	50
23	231-353/001-000	50
24	231-354/001-000	50

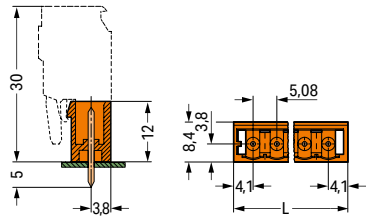

L = (pole no. – 1) x pin spacing + 8.2 mm

Locking of plug-in connection: Threaded flange ▸ Mating direction to the PCB: 0 ° ▸ Solder pin length: 3.8 mm



231-566/108-000

Pole number	Item No.	PU
2	231-532/108-000	200
3	231-533/108-000	200
4	231-534/108-000	100
5	231-535/108-000	100
6	231-536/108-000	100
7	231-537/108-000	100
8	231-538/108-000	100
9	231-539/108-000	100
10	231-540/108-000	100
12	231-542/108-000	100
14	231-544/108-000	50
15	231-545/108-000	50
16	231-546/108-000	50

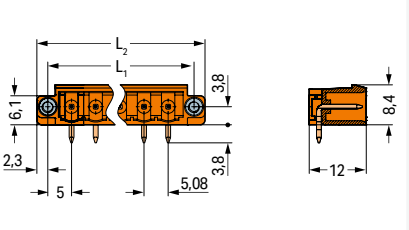

L_1 = (pole no. x pin spacing) + 5.4 mm
L_2 = (pole no. x pin spacing) + 10 mm

PU = packaging unit; SPU = subpackaging unit; Dimensions in mm

Variants:

- Other pole numbers
- 3.8 mm pin projection for male headers with straight solder pins
- Gold-plated or partially gold-plated contact surfaces
- Other versions (or variants) can be requested from WAGO Sales or configured at https://configurator.wago.com/.

THT male header ▸ *MCS* MIDI Classic ▸ 231 Series

Pin spacing: 5.08 mm / 0.2 inches ▸ Solder pin dimensions: 1 x 1 mm ▸ Color: orange

Locking of plug-in connection: Threaded flange ▸ Mating direction to the PCB: 90 ° ▸ Solder pin length: 5 mm



231-336/108-000

Pole number	Item No.	PU
2	**231-332/108-000**	200
3	**231-333/108-000**	200
4	**231-334/108-000**	100
5	**231-335/108-000**	100
6	**231-336/108-000**	100
7	**231-337/108-000**	100
8	**231-338/108-000**	100
9	**231-339/108-000**	100
10	**231-340/108-000**	100
12	**231-342/108-000**	100
14	**231-344/108-000**	50
15	**231-345/108-000**	50
16	**231-346/108-000**	50

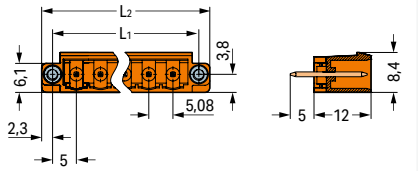

L_1 = (pole no. x pin spacing) + 5.4 mm
L_2 = (pole no. x pin spacing) + 10 mm

PU = packaging unit; SPU = subpackaging unit; Dimensions in mm

Variants:
- Other pole numbers
- 3.8 mm pin projection for male headers with straight solder pins
- Gold-plated or partially gold-plated contact surfaces
- Other versions (or variants) can be requested from WAGO Sales or configured at https://configurator.wago.com/.

THT male header for double-deck assembly ▸ *MCS* MIDI Classic ▸ 232 Series

Pin spacing: 5.08 mm / 0.2 inches ▸ Solder pin dimensions: 1 x 1 mm ▸ Mating direction to the PCB: 0 ° ▸ Solder pin length: 5 mm ▸ Color: orange

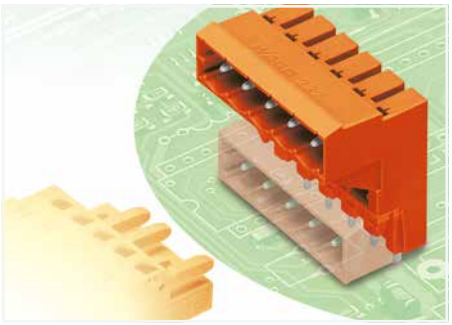

- Male headers for double-deck assembly provide high-density wiring for wire-to-board connections
- Horizontal PCB mounting
- Double-deck design allows male or female headers with angled solder pins to be placed on the lower deck
- Coding option available

Derating Curve
1-conductor female connector (231-102/026-000) with THR male header (232-332)
Pin spacing: 5 mm / Conductor cross-section: 2.5 mm² "f-st"
Based on: EN 60512-5-2 / Reduction factor: 0.8

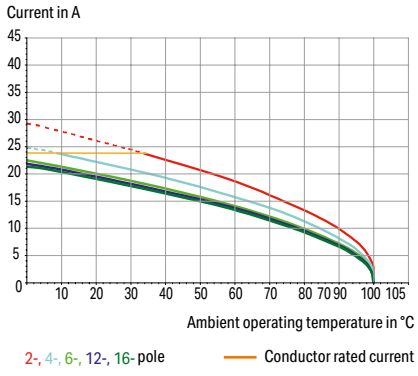

Electrical data			
Ratings per	**IEC/EN 60664-1**		
Overvoltage category	III	III	II
Pollution degree	3	2	2
Nominal voltage	320 V	320 V	630 V
Rated impulse withstand voltage	4 kV	4 kV	4 kV
Rated current	12 A	12 A	12 A
Approvals per	**UL 1059**		
Use group	B	C	D
Rated voltage	300 V	-	300 V
Rated current	10 A	-	10 A
Approvals per	**CSA**		
Use group	B	C	D
Rated voltage	300 V	-	300 V
Rated current	10 A	-	10 A

Material data	
Material group	I
Insulation material (main housing)	Polyamide (PA66)
Flammability class per UL94	V0
Contact material	Electrolytic copper (E_{Cu})
Contact Plating	Tin

Mechanical data	
Solder pin arrangement	over the entire male connector (in-line)
Number of solder pins per potential	1
Solder pin length	5 mm
Solder pin dimensions	1 x 1 mm
Drilled hole diameter	1.4 $^{(+0.1)}$ mm

Environmental requirements	
Limit temperature range	-60 … +100 °C
Processing temperature	-35 … +60 °C

Note:
The *MCS – MULTI CONNECTION SYSTEM* includes connectors without breaking capacity in accordance with DIN EN 61984. When used as intended, these connectors must not be connected/disconnected when live or under load.When used as intended, these connectors must not be connected/disconnected when live or under load. The circuit design should ensure header pins, which can be touched, are not live when unmated.

Coding Page 814

See technical section for further information

Approvals and corresponding ratings, visit www.wago.com

THT male header for double-deck assembly ▸ *MCS* MIDI Classic ▸ 232 Series

Pin spacing: 5.08 mm / 0.2 inches ▸ Solder pin dimensions: 1 x 1 mm ▸ Mating direction to the PCB: 0 ° ▸ Solder pin length: 5 mm ▸ Color: orange



232-366

Pole number	Item No.	PU
2	**232-362**	100
3	**232-363**	100
4	**232-364**	100
6	**232-366**	50
8	**232-368**	50
10	**232-370**	50
12	**232-372**	50
16	**232-376**	25

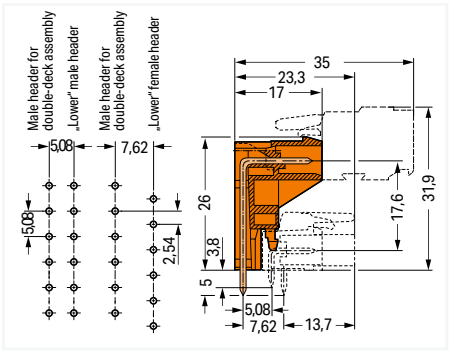

Length = (pole no. – 1) x pin spacing + 8.2 mm
The solder pins of the "lower" male headers are in line.
The solder pins of the "lower" female headers are staggered by half a pin spacing.

PU = packaging unit; SPU = subpackaging unit; Dimensions in mm

Variants:
- Other pole numbers
- Gold-plated or partially gold-plated contact surfaces
- Other versions (or variants) can be requested from WAGO Sales or configured at https://configurator.wago.com/.

THT male header ▸ *MCS* MIDI Classic ▸ 231 Series

Pin spacing: 5.08 mm / 0.2 inches ▸ Solder pin dimensions: 1.2 x 1.2 mm ▸ Color: orange

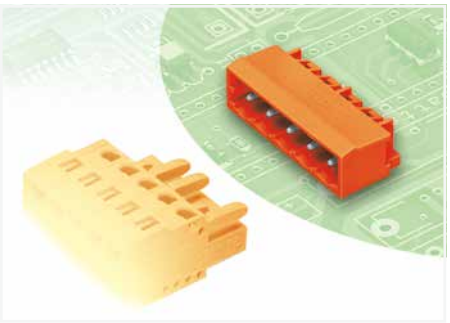

- Horizontal or vertical PCB mounting via straight or angled solder pins
- 1.2 x 1.2 mm solder pins allow nominal current up to 16 A, enhancing stability of shorter headers
- With coding fingers

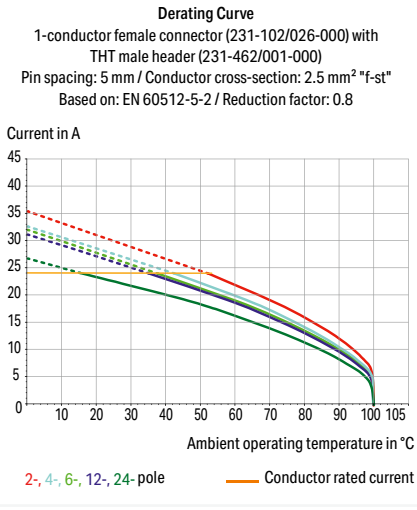

Electrical data			
Ratings per	**IEC/EN 60664-1**		
Overvoltage category	III	III	II
Pollution degree	3	2	2
Nominal voltage	250 V	320 V	630 V
Rated impulse withstand voltage	4 kV	4 kV	4 kV
Rated current	16 A	16 A	16 A
Approvals per	**UL 1059**		
Use group	B	C	D
Rated voltage	300 V	-	300 V
Rated current	15 A	-	10 A
Approvals per	**CSA**		
Use group	B	C	D
Rated voltage	300 V	-	300 V
Rated current	15 A	-	10 A

Material data	
Material group	I
Insulation material (main housing)	Polyamide (PA66)
Flammability class per UL94	V0
Contact material	Electrolytic copper (E_{Cu})
Contact Plating	Tin

Mechanical data	
Solder pin arrangement	over the entire male connector (in-line)
Number of solder pins per potential	1
Solder pin dimensions	1.2 x 1.2 mm
Drilled hole diameter	1.7 $^{(+0.1)}$ mm

Environmental requirements	
Limit temperature range	-60 … +100 °C
Processing temperature	-35 … +60 °C

Note:
The *MCS – MULTI CONNECTION SYSTEM* includes connectors without breaking capacity in accordance with DIN EN 61984. When used as intended, these connectors must not be connected/disconnected when live or under load.When used as intended, these connectors must not be connected/disconnected when live or under load. The circuit design should ensure header pins, which can be touched, are not live when unmated.

Coding Page 814
Installation Page 818
See technical section for further information
Approvals and corresponding ratings, visit www.wago.com

THT male header ▸ *MCS* MIDI Classic ▸ 231 Series

Pin spacing: 5.08 mm / 0.2 inches ▸ Solder pin dimensions: 1.2 x 1.2 mm ▸ Color: orange

Mating direction to the PCB: 0 ° ▸ Solder pin length: 3.8 mm

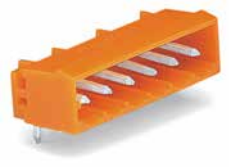

231-566/001-000

Pole number	Item No.	PU
2	231-562/001-000	200
3	231-563/001-000	200
4	231-564/001-000	200
5	231-565/001-000	200
6	231-566/001-000	100
7	231-567/001-000	100
8	231-568/001-000	100
9	231-569/001-000	100
10	231-570/001-000	100
11	231-571/001-000	100
12	231-572/001-000	100
13	231-573/001-000	50
14	231-574/001-000	50
15	231-575/001-000	50
16	231-576/001-000	50
17	231-577/001-000	50
18	231-578/001-000	50
19	231-579/001-000	50
20	231-580/001-000	50
21	231-581/001-000	50
22	231-582/001-000	50
23	231-583/001-000	50
24	231-584/001-000	50

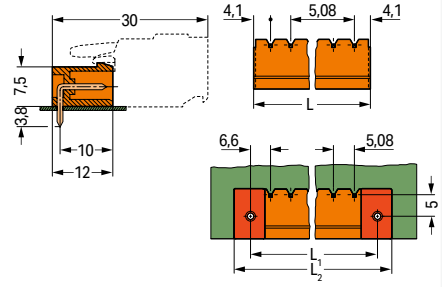

L = (pole no. – 1) x pin spacing + 8.2 mm
L_1 = L + 5 mm
L_2 = L_1 + 7.4 mm

Mating direction to the PCB: 90 ° ▸ Solder pin length: 5 mm

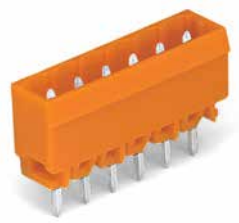

231-366/001-000

Pole number	Item No.	PU
2	231-362/001-000	200
3	231-363/001-000	200
4	231-364/001-000	200
5	231-365/001-000	200
6	231-366/001-000	100
7	231-367/001-000	100
8	231-368/001-000	100
9	231-369/001-000	100
10	231-370/001-000	100
11	231-371/001-000	100
12	231-372/001-000	100
13	231-373/001-000	50
14	231-374/001-000	50
15	231-375/001-000	50
16	231-376/001-000	50
17	231-377/001-000	50
18	231-378/001-000	50
19	231-379/001-000	50
20	231-380/001-000	50
21	231-381/001-000	50
22	231-382/001-000	50
23	231-383/001-000	50
24	231-384/001-000	50

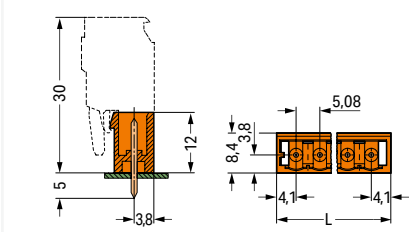

L = (pole no. – 1) x pin spacing + 8.2 mm

Locking of plug-in connection: Threaded flange ▸ Mating direction to the PCB: 0 ° ▸ Solder pin length: 3.8 mm



231-566/108-000

Pole number	Item No.	PU
2	231-562/108-000	100
3	231-563/108-000	200
4	231-564/108-000	100
5	231-565/108-000	100
6	231-566/108-000	100
7	231-567/108-000	100
8	231-568/108-000	100
9	231-569/108-000	100
10	231-570/108-000	100
12	231-572/108-000	100
14	231-574/108-000	50
15	231-575/108-000	50
16	231-576/108-000	50

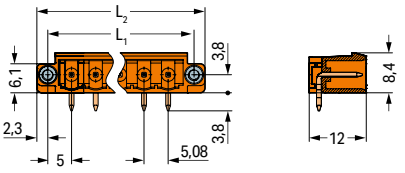

L_1 = (pole no. x pin spacing) + 5.4 mm
L_2 = (pole no. x pin spacing) + 10 mm

PU = packaging unit; SPU = subpackaging unit; Dimensions in mm

Variants:

- Other pole numbers
- 3.8 mm pin projection for male headers with straight solder pins
- Gold-plated or partially gold-plated contact surfaces
- Other versions (or variants) can be requested from WAGO Sales or configured at https://configurator.wago.com/.

THT male header ▸ *MCS* MIDI Classic ▸ 231 Series

Pin spacing: 5.08 mm / 0.2 inches ▸ Solder pin dimensions: 1.2 x 1.2 mm ▸ Color: orange

Locking of plug-in connection: Threaded flange ▸ Mating direction to the PCB: 90 ° ▸ Solder pin length: 5 mm



231-366/108-000

Pole number	Item No.	PU
2	**231-362/108-000**	200
3	**231-363/108-000**	200
4	**231-364/108-000**	100
5	**231-365/108-000**	100
6	**231-366/108-000**	100
7	**231-367/108-000**	100
8	**231-368/108-000**	100
9	**231-369/108-000**	100
10	**231-370/108-000**	100
12	**231-372/108-000**	100
14	**231-374/108-000**	50
15	**231-375/108-000**	50
16	**231-376/108-000**	50

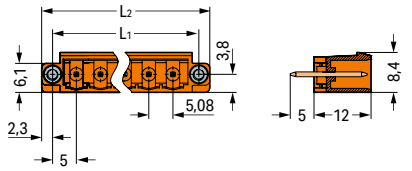

L_1 = (pole no. x pin spacing) + 5.4 mm
L_2 = (pole no. x pin spacing) + 10 mm

PU = packaging unit; SPU = subpackaging unit; Dimensions in mm

Variants:
- Other pole numbers
- 3.8 mm pin projection for male headers with straight solder pins
- Gold-plated or partially gold-plated contact surfaces
- Other versions (or variants) can be requested from WAGO Sales or configured at https://configurator.wago.com/.

1-conductor female connector ▸ *MCS* MIDI Classic ▸ 231 Series

Pin spacing: 7.5 mm / 0.295 inches ▸ Actuation type: Operating tool ▸ CAGE CLAMP® ▸ Conductor entry direction to mating direction: 0 ° ▸ Color: gray

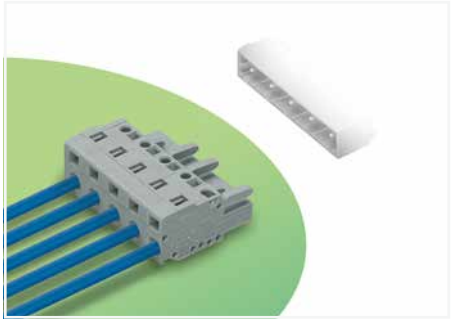

- Universal connection for all conductor types
- Easy cable pre-assembly and on-unit wiring via vertical and horizontal CAGE CLAMP® actuation
- Integrated test ports
- With coding fingers

Derating Curve
1-conductor female connector (231-202/026-000) with THT male header (231-832/001-000)
Pin spacing: 7.5 mm / Conductor cross-section: 2.5 mm² "f-st"
Based on: EN 60512-5-2 / Reduction factor: 0.8

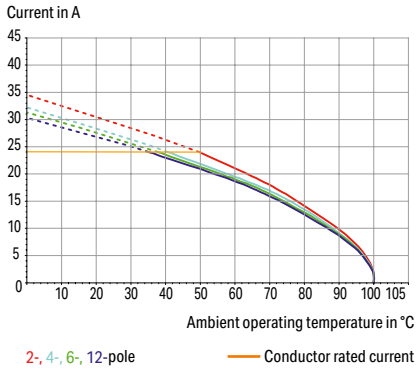

Electrical data			
Ratings per	**IEC/EN 60664-1**		
Overvoltage category	III	III	II
Pollution degree	3	2	2
Nominal voltage	500 V	630 V	1000 V
Rated impulse withstand voltage	6 kV	6 kV	6 kV
Rated current	16 A	16 A	16 A
Approvals per	**UL 1059**		
Use group	B	C	D
Rated voltage	300 V	-	300 V
Rated current	15 A	-	10 A
Approvals per	**CSA**		
Use group	B	C	D
Rated voltage	300 V	-	300 V
Rated current	15 A	-	10 A

Connection Data	
Connection technology	CAGE CLAMP®
Strip length	8 … 9 mm / 0.31 … 0.35 inches
Solid conductor	0.08 … 2.5 mm² / 28 … 12 AWG
Fine-stranded conductor	0.08 … 2.5 mm² / 28 … 12 AWG
Fine-stranded conductor; with insulated ferrule	0.25 … 1.5 mm²
Fine-stranded conductor; with uninsulated ferrule	0.25 … 2.5 mm²

Material data	
Material group	I
Insulation material (main housing)	Polyamide (PA66)
Flammability class per UL94	V0
Clamping spring material	Chrome-nickel spring steel (CrNi)
Contact material	Copper alloy
Contact Plating	Tin

Environmental requirements	
Limit temperature range	-60 … +100 °C
Processing temperature	-35 … +60 °C

Note:
The *MCS – MULTI CONNECTION SYSTEM* includes connectors without breaking capacity in accordance with DIN EN 61984. When used as intended, these connectors must not be connected/disconnected when live or under load.When used as intended, these connectors must not be connected/disconnected when live or under load. The circuit design should ensure header pins, which can be touched, are not live when unmated.

Cover	Page 816
Ferrule	Page 1081
Installation	Page 818, 1071
Insulation stop	Page 817
Marking	Page 1067
Mounting adapter	Page 820
Strain relief	Page 828
Test and measurement	Page 833, 1088
Tool	Page 812, 1072
Direct marking	Page 628
Cutout dimensions	Page 632
See technical section for further information	
Approvals and corresponding ratings, visit www.wago.com	

1-conductor female connector ▸ *MCS* MIDI Classic ▸ 231 Series

Pin spacing: 7.5 mm / 0.295 inches ▸ Actuation type: Operating tool ▸ CAGE CLAMP® ▸ Conductor entry direction to mating direction: 0 ° ▸ Color: gray

	Locking of plug-in connection: Locking lever	Mounting type: Panel mounting ▸ Mounting type: Snap-in foot







231-206/026-000

Pole number	Item No.	PU
2	231-202/026-000	100
3	231-203/026-000	100
4	231-204/026-000	50
5	231-205/026-000	50
6	231-206/026-000	50
7	231-207/026-000	50
8	231-208/026-000	25
9	231-209/026-000	25
10	231-210/026-000	25
11	231-211/026-000	25
12	231-212/026-000	25
13	231-213/026-000	10
16	231-216/026-000	10

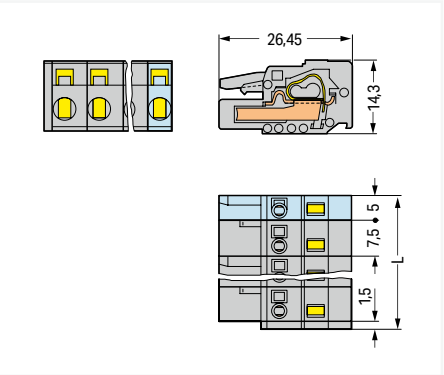

L = (pole no. – 1) x pin spacing + 5 mm + 1.5 mm
2- to 3-pole female connectors – one latch only

231-206/037-000

Pole number	Item No.	PU
2	231-202/037-000	50
3	231-203/037-000	50
4	231-204/037-000	50
5	231-205/037-000	50
6	231-206/037-000	25
7	231-207/037-000	25
8	231-208/037-000	25
9	231-209/037-000	25
10	231-210/037-000	25
11	231-211/037-000	10
12	231-212/037-000	10
13	231-213/037-000	10
16	231-216/037-000	10

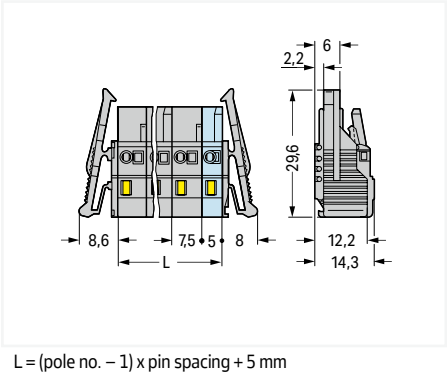

L = (pole no. – 1) x pin spacing + 5 mm
2- to 3-pole female connectors – one latch only

231-206/008-000

Pole number	Item No.	PU
2	231-202/008-000	100
3	231-203/008-000	100
4	231-204/008-000	50
5	231-205/008-000	50
6	231-206/008-000	50
7	231-207/008-000	50
8	231-208/008-000	25
9	231-209/008-000	25
10	231-210/008-000	25
11	231-211/008-000	25
12	231-212/008-000	25
13	231-213/008-000	10
16	231-216/008-000	10

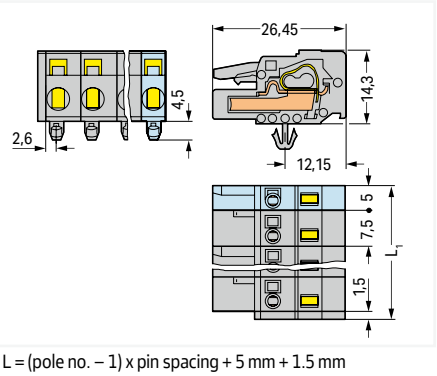

L = (pole no. – 1) x pin spacing + 5 mm + 1.5 mm
2- to 3-pole female connectors – one latch only

9

PU = packaging unit; SPU = subpackaging unit; Dimensions in mm

Variants:

- Gold-plated or partially gold-plated contact surfaces
- Other versions (or variants) can be requested from WAGO Sales or configured at https://configurator.wago.com/.

1-conductor female connector ▸ *MCS* MIDI Classic ▸ 231 Series

Pin spacing: 7.5 mm / 0.295 inches ▸ Actuation type: Operating tool ▸ CAGE CLAMP® ▸ Conductor entry direction to mating direction: 0 ° ▸ Color: gray

Mounting type: Feed-through mounting; Panel mounting ▸ Mounting type: Mounting flange



231-206/031-000

Pole number	Item No.	PU
2	**231-202/031-000**	50
3	**231-203/031-000**	50
4	**231-204/031-000**	50
5	**231-205/031-000**	50
6	**231-206/031-000**	25
7	**231-207/031-000**	25
8	**231-208/031-000**	25
9	**231-209/031-000**	25
10	**231-210/031-000**	25
11	**231-211/031-000**	10
12	**231-212/031-000**	10
13	**231-213/031-000**	10
16	**231-216/031-000**	10

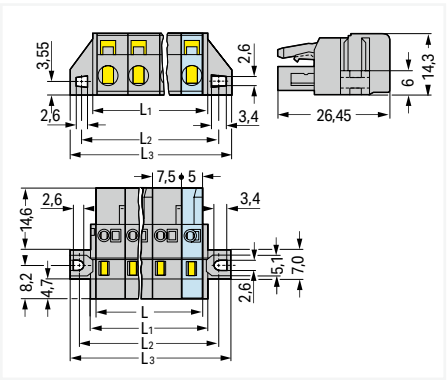

L = (pole no. – 1) x pin spacing + 5 mm
L_1 = L + 3 mm
L_2 = L + 8.8 mm
L_3 = L + 14.8 mm
2- to 3-pole female connectors – one latch only

Mounting type: Feed-through mounting; Panel mounting ▸ Mounting type: Mounting flange ▸ with reinforcing strips



231-206/027-000

Pole number	Item No.	PU
6	**231-206/027-000**	25
7	**231-207/027-000**	25
8	**231-208/027-000**	25
9	**231-209/027-000**	25
10	**231-210/027-000**	25
11	**231-211/027-000**	10
12	**231-212/027-000**	10
13	**231-213/027-000**	10
16	**231-216/027-000**	10

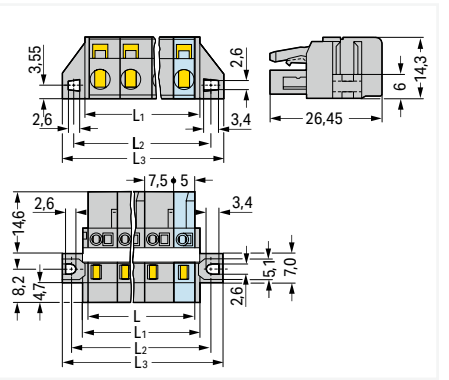

L = (pole no. – 1) x pin spacing + 5 mm
L_1 = L + 3 mm
L_2 = L + 8.8 mm
L_3 = L + 14.8 mm
2- to 3-pole female connectors – one latch only

PU = packaging unit; SPU = subpackaging unit; Dimensions in mm

Variants:
- Gold-plated or partially gold-plated contact surfaces
- Other versions (or variants) can be requested from WAGO Sales or configured at https://configurator.wago.com/.

1-conductor female connector, angled ▸ *MCS* MIDI Classic ▸ 732 Series

Pin spacing: 7.5 mm / 0.295 inches ▸ Actuation type: Operating tool ▸ CAGE CLAMP® ▸ Conductor entry direction to mating direction: 270 ° ▸ Color: gray

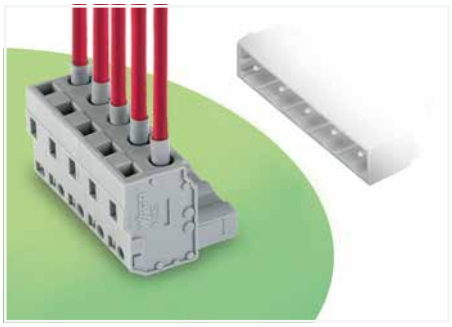

- Universal connection for all conductor types
- Easy cable pre-assembly and on-unit wiring via vertical and horizontal CAGE CLAMP® actuation
- Integrated test ports
- With coding fingers

Derating Curve
1-conductor female connector (231-202/026-000) with THT male header (231-832/001-000)
Pin spacing: 7.5 mm / Conductor cross-section: 2.5 mm² "f-st"
Based on: EN 60512-5-2 / Reduction factor: 0.8

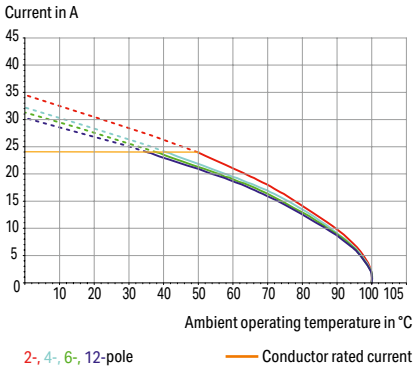

Electrical data			
Ratings per	**IEC/EN 60664-1**		
Overvoltage category	III	III	II
Pollution degree	3	2	2
Nominal voltage	500 V	630 V	1000 V
Rated impulse withstand voltage	6 kV	6 kV	6 kV
Rated current	14 A	14 A	14 A
Approvals per	**UL 1059**		
Use group	B	C	D
Rated voltage	300 V	-	300 V
Rated current	15 A	-	10 A
Approvals per	**CSA**		
Use group	B	C	D
Rated voltage	300 V	-	300 V
Rated current	15 A	-	10 A

Connection Data	
Connection technology	CAGE CLAMP®
Strip length	8 … 9 mm / 0.31 … 0.35 inches
Solid conductor	0.08 … 2.5 mm² / 28 … 12 AWG
Fine-stranded conductor	0.08 … 2.5 mm² / 28 … 12 AWG
Fine-stranded conductor; with insulated ferrule	0.25 … 1.5 mm²
Fine-stranded conductor; with uninsulated ferrule	0.25 … 2.5 mm²

Material data	
Material group	I
Insulation material (main housing)	Polyamide (PA66)
Flammability class per UL94	V0
Clamping spring material	Chrome-nickel spring steel (CrNi)
Contact material	Copper alloy
Contact Plating	Tin

Mechanical data	
Design	angled

Environmental requirements	
Limit temperature range	-60 … +85 °C
Processing temperature	-35 … +60 °C

Note:
The *MCS – MULTI CONNECTION SYSTEM* includes connectors without breaking capacity in accordance with DIN EN 61984. When used as intended, these connectors must not be connected/disconnected when live or under load.When used as intended, these connectors must not be connected/disconnected when live or under load. The circuit design should ensure header pins, which can be touched, are not live when unmated.

Ferrule	Page 1081
Insulation stop	Page 817
Marking	Page 1067
Strain relief	Page 828
Test and measurement	Page 833, 1088
Tool	Page 812
Direct marking	Page 628
See technical section for further information	
Approvals and corresponding ratings, visit www.wago.com	

1-conductor female connector, angled ▸ *MCS* MIDI Classic ▸ 732 Series

Pin spacing: 7.5 mm / 0.295 inches ▸ Actuation type: Operating tool ▸ CAGE CLAMP® ▸ Conductor entry direction to mating direction: 270 ° ▸ Color: gray



732-106/026-000

Pole number	Item No.	PU
2	**732-102/026-000**	100
3	**732-103/026-000**	100
4	**732-104/026-000**	50
5	**732-105/026-000**	25
6	**732-106/026-000**	50
7	**732-107/026-000**	50
8	**732-108/026-000**	25
9	**732-109/026-000**	25
10	**732-110/026-000**	25
11	**732-111/026-000**	25
12	**732-112/026-000**	25
16	**732-116/026-000**	10

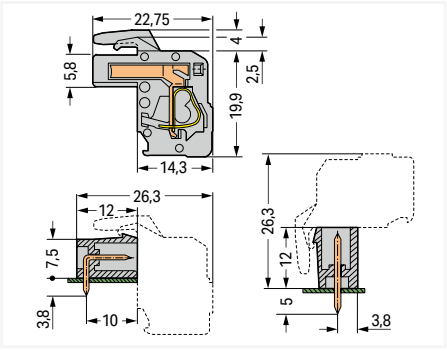

Total length = (pole no. – 1) x pin spacing + 5 mm + 1.5 mm + 0.9 mm

PU = packaging unit; SPU = subpackaging unit; Dimensions in mm

Variants:

- Gold-plated or partially gold-plated contact surfaces
- Other versions (or variants) can be requested from WAGO Sales or configured at https://configurator.wago.com/.

1-conductor female connector, angled ▸ *MCS* MIDI Classic ▸ 731 Series

Pin spacing: 7.5 mm / 0.295 inches ▸ Actuation type: Operating tool ▸ CAGE CLAMP® ▸ Conductor entry direction to mating direction: 90 ° ▸ Color: gray

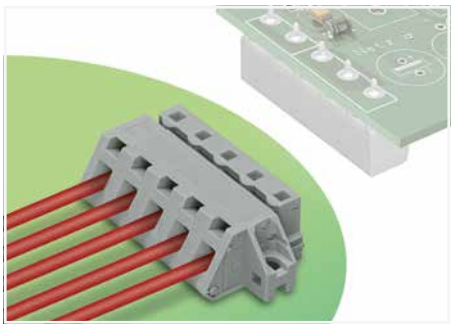

- Universal connection for all conductor types
- Available with snap-in mounting feet or flanges for panel or through-panel mounting
- Mounting adapter allows versions with snap-in mounting feet to be DIN-35 rail mounted
- Easy conductor termination, even when halves are mated

Derating Curve
1-conductor female connector (731-532/031-000) with THT male header (231-232/001-000)
Pin spacing: 7.5 mm / Conductor cross-section: 2.5 mm² "f-st"
Based on: EN 60512-5-2 / Reduction factor: 0.8

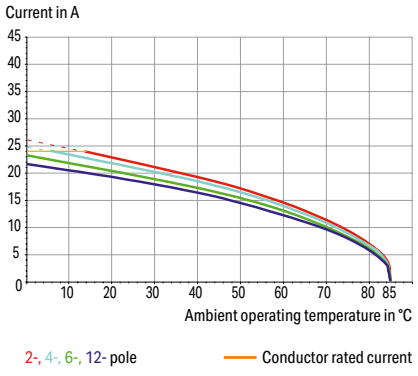

Electrical data			
Ratings per	**IEC/EN 60664-1**		
Overvoltage category	III	III	II
Pollution degree	3	2	2
Nominal voltage	500 V	630 V	1000 V
Rated impulse withstand voltage	6 kV	6 kV	6 kV
Rated current	12 A	12 A	12 A
Approvals per	**UL 1059**		
Use group	B	C	D
Rated voltage	300 V	-	300 V
Rated current	15 A	-	10 A
Ratings			
Approvals per	UL 1977		
Rated voltage	600 V		
Rated current	15 A		
Approvals per	**CSA**		
Use group	B	C	D
Rated voltage	300 V	-	300 V
Rated current	15 A	-	10 A

Connection Data	
Connection technology	CAGE CLAMP®
Strip length	7 … 8 mm / 0.28 … 0.31 inches
Solid conductor	0.08 … 2.5 mm² / 28 … 12 AWG
Fine-stranded conductor	0.08 … 2.5 mm² / 28 … 12 AWG
Fine-stranded conductor; with insulated ferrule	0.25 … 1.5 mm²
Fine-stranded conductor; with uninsulated ferrule	0.25 … 2.5 mm²

Material data	
Material group	I
Insulation material (main housing)	Polyamide (PA66)
Flammability class per UL94	V0
Clamping spring material	Chrome-nickel spring steel (CrNi)
Contact material	Copper alloy
Contact Plating	Tin

Mechanical data	
Design	angled; mountable

Environmental requirements	
Limit temperature range	-60 … +85 °C
Processing temperature	-35 … +60 °C

Note:
The *MCS – MULTI CONNECTION SYSTEM* includes connectors without breaking capacity in accordance with DIN EN 61984. When used as intended, these connectors must not be connected/disconnected when live or under load.When used as intended, these connectors must not be connected/disconnected when live or under load. The circuit design should ensure header pins, which can be touched, are not live when unmated.

Ferrule	Page 1081
Installation	Page 818, 1071
Marking	Page 1067
Strain relief	Page 828
Test and measurement	Page 833
Tool	Page 812, 1072
Direct marking	Page 628
See technical section for further information	
Approvals and corresponding ratings, visit www.wago.com	

1-conductor female connector, angled ▸ *MCS* MIDI Classic ▸ 731 Series

Pin spacing: 7.5 mm / 0.295 inches ▸ Actuation type: Operating tool ▸ CAGE CLAMP® ▸ Conductor entry direction to mating direction: 90 ° ▸ Color: gray

Mounting type: Panel mounting ▸ Mounting type: Snap-in foot



731-535/008-000



Angled female connector with DIN-35 rail-mount adapter (209-120)

Pole number	Item No.	PU
2	731-532/008-000	100
3	731-533/008-000	100
4	731-534/008-000	50
5	731-535/008-000	50
6	731-536/008-000	50
7	731-537/008-000	50
8	731-538/008-000	25
9	731-539/008-000	25
10	731-540/008-000	25
11	731-541/008-000	25
12	731-542/008-000	25
13	731-543/008-000	10
16	731-546/008-000	10

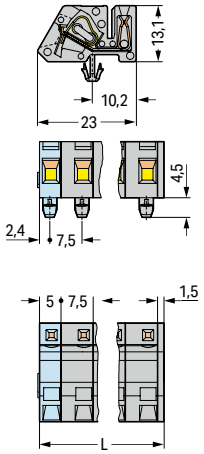

L = (pole no. – 1) x pin spacing + 5 mm + 1.5 mm

PU = packaging unit; SPU = subpackaging unit; Dimensions in mm

Variants:
- Other pole numbers
- Gold-plated or partially gold-plated contact surfaces
- Other versions (or variants) can be requested from WAGO Sales or configured at https://configurator.wago.com/.

1-conductor female connector, angled ▸ *MCS* MIDI Classic ▸ 731 Series

Pin spacing: 7.5 mm / 0.295 inches ▸ Actuation type: Operating tool ▸ CAGE CLAMP® ▸ Conductor entry direction to mating direction: 90 ° ▸ Color: gray

Mounting type: Feed-through mounting; Panel mounting ▸ Mounting type: Mounting flange

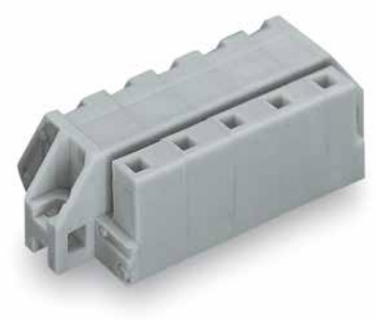

731-535/031-000

Pole number	Item No.	PU
2	731-532/031-000	50
3	731-533/031-000	50
4	731-534/031-000	50
5	731-535/031-000	25
6	731-536/031-000	25
7	731-537/031-000	25
8	731-538/031-000	25
9	731-539/031-000	25
10	731-540/031-000	25
11	731-541/031-000	10
12	731-542/031-000	10
13	731-543/031-000	10
16	731-546/031-000	10

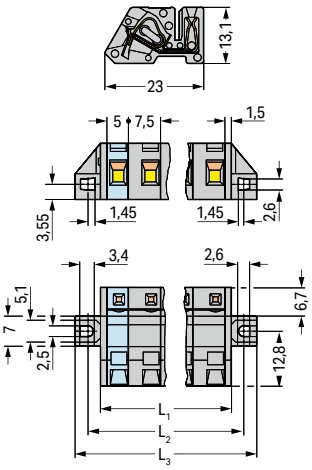

L_1 = (pole no. – 1) x pin spacing + 5 mm + 3 mm
L_2 = (pole no. – 1) x pin spacing + 5 mm + 8.8 mm
L_3 = (pole no. – 1) x pin spacing + 5 mm + 14.8 mm



Angled female connector –
used as through-panel connector; termination ports and operating slots are located outside the housing – panel thickness up to 2 mm.



Angled female connector –
a male header with straight solder pins is used for horizontal PCB mounting in narrow housings.

PU = packaging unit; SPU = subpackaging unit; Dimensions in mm

Variants:
- Other pole numbers
- Gold-plated or partially gold-plated contact surfaces
- Other versions (or variants) can be requested from WAGO Sales or configured at https://configurator.wago.com/.

2-conductor female connector ▸ *MCS* MIDI Classic ▸ 231 Series

Pin spacing: 7.5 mm / 0.295 inches ▸ Actuation type: Operating tool ▸ Push-in CAGE CLAMP® ▸ Conductor entry direction to mating direction: 0 ° ▸ Color: gray

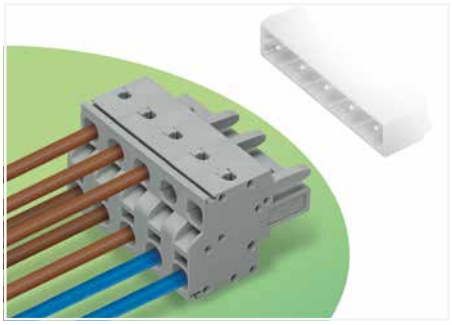

- Universal connection for all conductor types
- Two conductor entries per pole
- For looping through power or data buses
- Bus connection is retained, even when unmated
- Push-in termination of solid and ferruled conductors
- With coding fingers

Derating Curve
2-conductor female connector (231-2202/026-000) with THT male header (231-262/001-000)
Pin spacing: 7.5 mm / Conductor cross-section: 2.5 mm² "f-st"
Based on: EN 60512-5-2 / Reduction factor: 0.8

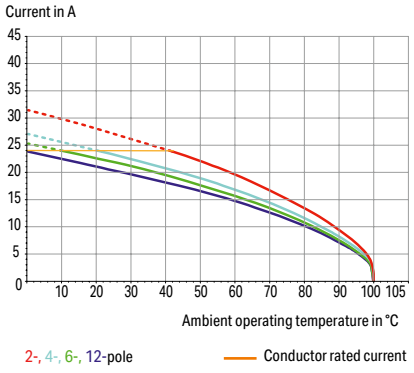

Electrical data			
Ratings per	**IEC/EN 60664-1**		
Overvoltage category	III	III	II
Pollution degree	3	2	2
Nominal voltage	500 V	630 V	1000 V
Rated impulse withstand voltage	6 kV	6 kV	6 kV
Rated current	16 A	16 A	16 A
Approvals per	**UL 1059**		
Use group	B	C	D
Rated voltage	300 V	-	300 V
Rated current	20 A	-	10 A
Approvals per	**CSA**		
Use group	B	C	D
Rated voltage	300 V	-	300 V
Rated current	15 A	-	10 A

Connection Data	
Connection technology	Push-in CAGE CLAMP®
Strip length	9 … 10 mm / 0.35 … 0.39 inches
Solid conductor	0.2 … 2.5 mm² / 24 … 12 AWG
Fine-stranded conductor	0.2 … 2.5 mm² / 24 … 12 AWG
Fine-stranded conductor; with insulated ferrule	0.25 … 1.5 mm²
Fine-stranded conductor; with uninsulated ferrule	0.25 … 2.5 mm²

Material data	
Material group	I
Insulation material (main housing)	Polyamide (PA66)
Flammability class per UL94	V0
Clamping spring material	Chrome-nickel spring steel (CrNi)
Contact material	Copper alloy
Contact Plating	Tin

Environmental requirements	
Limit temperature range	-60 … +100 °C
Processing temperature	-35 … +60 °C

Note:
The *MCS – MULTI CONNECTION SYSTEM* includes connectors without breaking capacity in accordance with DIN EN 61984. When used as intended, these connectors must not be connected/disconnected when live or under load.When used as intended, these connectors must not be connected/disconnected when live or under load. The circuit design should ensure header pins, which can be touched, are not live when unmated.

Cover	Page 816
Ferrule	Page 1081
Insulation stop	Page 817
Marking	Page 1067
Strain relief	Page 825
Test and measurement	Page 833, 1088
Tool	Page 1072
Direct marking	Page 628
See technical section for further information	
Approvals and corresponding ratings, visit www.wago.com	

2-conductor female connector ▸ *MCS* MIDI Classic ▸ 231 Series

Pin spacing: 7.5 mm / 0.295 inches ▸ Actuation type: Operating tool ▸ Push-in CAGE CLAMP® ▸ Conductor entry direction to mating direction: 0 ° ▸ Color: gray

Plugging without loss of pin spacing



231-2206/026-000

Pole number	Item No.	PU
2	231-2202/026-000	100
3	231-2203/026-000	100
4	231-2204/026-000	50
5	231-2205/026-000	50
6	231-2206/026-000	50
7	231-2207/026-000	50
8	231-2208/026-000	25
9	231-2209/026-000	25
10	231-2210/026-000	25
11	231-2211/026-000	25
12	231-2212/026-000	25

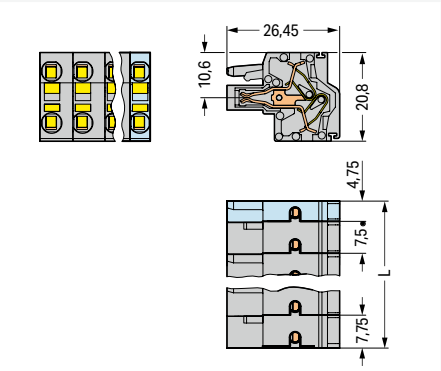

L = (pole no. – 2) x pin spacing + 12.5 mm
2- to 3-pole female connectors – one latch only

Locking of plug-in connection: Locking lever



231-2206/037-000

Pole number	Item No.	PU
2	231-2202/037-000	50
3	231-2203/037-000	50
4	231-2204/037-000	50
5	231-2205/037-000	50
6	231-2206/037-000	25
7	231-2207/037-000	25
8	231-2208/037-000	25
9	231-2209/037-000	25
10	231-2210/037-000	25
11	231-2211/037-000	10
12	231-2212/037-000	10

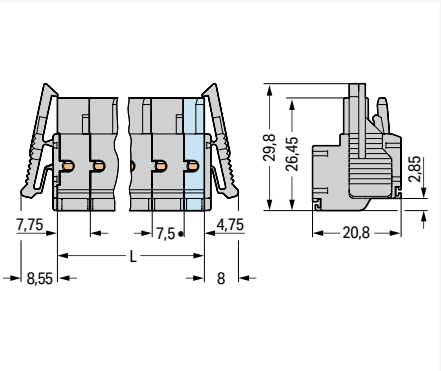

L = (pole no. – 2) x pin spacing + 12.5 mm
2- to 3-pole female connectors – one latch only

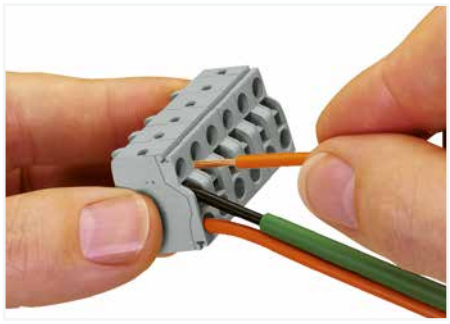

Operating Push-in CAGE CLAMP® is easy, fast and identical to that of CAGE CLAMP®. The screwdriver is fully inserted into the operating slot, holding Push-in CAGE CLAMP® open. After the conductor has been inserted into the clamping unit and the screwdriver been withdrawn, the conductor is clamped safely. Solid and fine-stranded conductors < 0.5 mm² (20 AWG) are terminated and removed using a screwdriver.

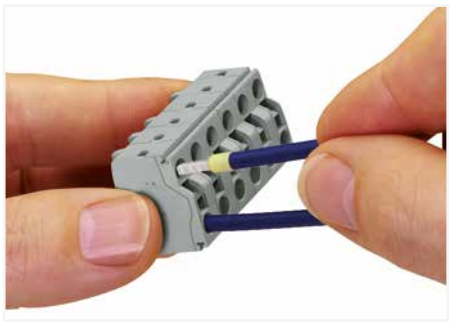

Solid conductors ≥ 0.5 mm² (20 AWG), as well as ferruled, fine-stranded conductors can be terminated by simply pushing them into unit. Integrated test ports allow touch contact with current bar via test probes in both horizontal and vertical directions.

9

PU = packaging unit; SPU = subpackaging unit; Dimensions in mm

Variants:

- Gold-plated or partially gold-plated contact surfaces
- Other versions (or variants) can be requested from WAGO Sales or configured at https://configurator.wago.com/.

1-conductor female connector ▸ *MCS* MIDI Classic ▸ 2231 Series

Pin spacing: 7.5 mm / 0.295 inches ▸ Actuation type: Push-button ▸ Push-in CAGE CLAMP® ▸ Conductor entry direction to mating direction: 0 ° ▸ Color: gray

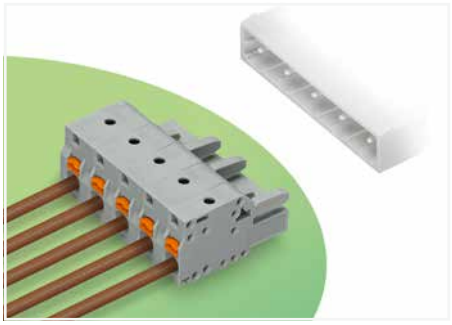

- Universal connection for all conductor types
- Easy-to-use design does not require specialty tools
- Ability to wire while mated
- Push-in termination of solid and ferruled conductors
- Integrated test ports for testing parallel to the conductor entry
- Coding option available

Derating Curve
1-conductor female connector (2231-202/026-000) with THT male header (231-262/001-000)
Pin spacing: 7.5 mm / Conductor cross-section: 2.5 mm² "f-st"
Based on: EN 60512-5-2 / Reduction factor: 0.8

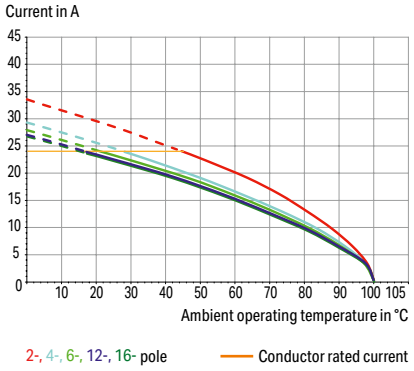

Electrical data			
Ratings per	**IEC/EN 60664-1**		
Overvoltage category	III	III	II
Pollution degree	3	2	2
Nominal voltage	500 V	630 V	1000 V
Rated impulse withstand voltage	6 kV	6 kV	6 kV
Rated current	16 A	16 A	16 A
Approvals per	**UL 1059**		
Use group	B	C	D
Rated voltage		300 V	
Rated current	15 A	15 A	10 A
Approvals per	**CSA**		
Use group	B	C	D
Rated voltage		300 V	
Rated current	15 A	15 A	10 A

Connection Data	
Connection technology	Push-in CAGE CLAMP®
Strip length	10 … 11 mm / 0.39 … 0.43 inches
Solid conductor	0.2 … 2.5 mm² / 24 … 12 AWG
Fine-stranded conductor	0.2 … 2.5 mm² / 24 … 12 AWG
Fine-stranded conductor; with insulated ferrule	0.25 … 1.5 mm²
Fine-stranded conductor; with uninsulated ferrule	0.25 … 2.5 mm²

Material data	
Material group	I
Insulation material (main housing)	Polyamide (PA66)
Flammability class per UL94	V0
Clamping spring material	Chrome-nickel spring steel (CrNi)
Contact material	Copper alloy
Contact Plating	Tin

Environmental requirements	
Limit temperature range	-60 … +100 °C
Processing temperature	-35 … +60 °C

Note:
The *MCS – MULTI CONNECTION SYSTEM* includes connectors without breaking capacity in accordance with DIN EN 61984. When used as intended, these connectors must not be connected/disconnected when live or under load.When used as intended, these connectors must not be connected/disconnected when live or under load. The circuit design should ensure header pins, which can be touched, are not live when unmated.

Ferrule	Page 1081
Installation	Page 819
Insulation stop	Page 817
Marking	Page 1067
Strain relief	Page 825
Test and measurement	Page 833, 1088
Tool	Page 1072
Direct marking	Page 628
Cutout dimensions	Page 632
See technical section for further information	
Approvals and corresponding ratings, visit www.wago.com	

1-conductor female connector ▸ *MCS* MIDI Classic ▸ 2231 Series

Pin spacing: 7.5 mm / 0.295 inches ▸ Actuation type: Push-button ▸ Push-in CAGE CLAMP® ▸ Conductor entry direction to mating direction: 0 ° ▸ Color: gray

	Locking of plug-in connection: Locking lever	Mounting type: Panel mounting ▸ Mounting type: Snap-in foot

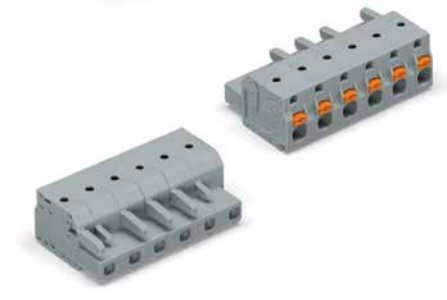

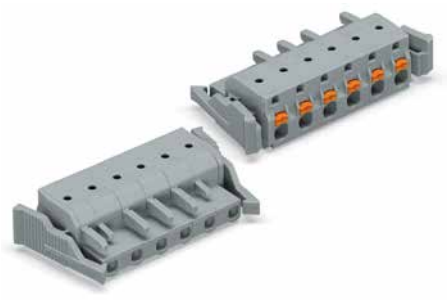

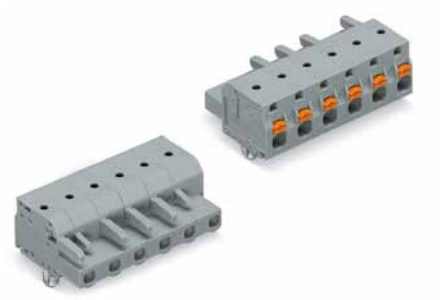

2231-206/026-000

Pole number	Item No.	PU
2	2231-202/026-000	100
3	2231-203/026-000	100
4	2231-204/026-000	50
5	2231-205/026-000	50
6	2231-206/026-000	50
7	2231-207/026-000	50
8	2231-208/026-000	25
9	2231-209/026-000	25
10	2231-210/026-000	25
11	2231-211/026-000	25
12	2231-212/026-000	25
13	2231-213/026-000	10
16	2231-216/026-000	10

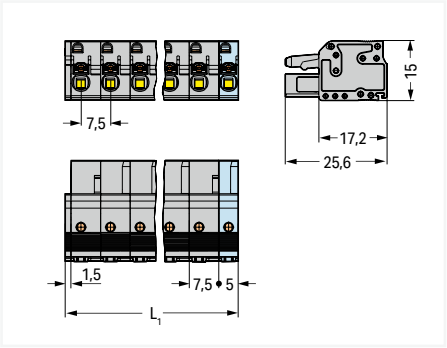

L_1 = (pole no. – 1) x pin spacing + 5 mm + 1.5 mm
2- to 3-pole female connectors – one latch only

2231-206/037-000

Pole number	Item No.	PU
2	2231-202/037-000	50
3	2231-203/037-000	50
4	2231-204/037-000	50
5	2231-205/037-000	50
6	2231-206/037-000	25
7	2231-207/037-000	25
8	2231-208/037-000	25
9	2231-209/037-000	25
10	2231-210/037-000	25
11	2231-211/037-000	10
12	2231-212/037-000	10
13	2231-213/037-000	10
16	2231-216/037-000	10

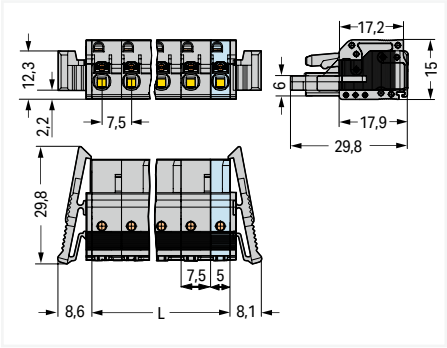

L = (pole no. – 1) x pin spacing + 5 mm
2- to 3-pole female connectors – one latch only

2231-206/008-000

Pole number	Item No.	PU
2	2231-202/008-000	100
3	2231-203/008-000	100
4	2231-204/008-000	50
5	2231-205/008-000	50
6	2231-206/008-000	50
7	2231-207/008-000	50
8	2231-208/008-000	25
9	2231-209/008-000	25
10	2231-210/008-000	25
11	2231-211/008-000	25
12	2231-212/008-000	25
13	2231-213/008-000	10
16	2231-216/008-000	10

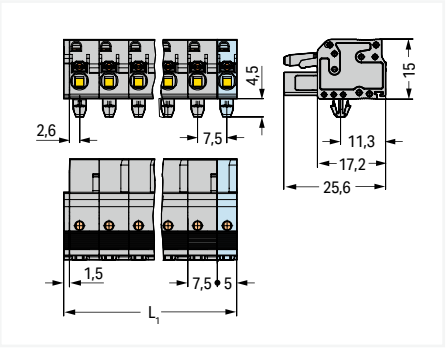

L_1 = (pole no. – 1) x pin spacing + 5 mm + 1.5 mm
2- to 3-pole female connectors – one latch only

9

PU = packaging unit; SPU = subpackaging unit; Dimensions in mm

Variants:
- Gold-plated or partially gold-plated contact surfaces
- Other versions (or variants) can be requested from WAGO Sales or configured at https://configurator.wago.com/.

1-conductor female connector ▸ *MCS* MIDI Classic ▸ 2231 Series

Pin spacing: 7.5 mm / 0.295 inches ▸ Actuation type: Push-button ▸ Push-in CAGE CLAMP® ▸ Conductor entry direction to mating direction: 0 ° ▸ Color: gray

Mounting type: Feed-through mounting; Panel mounting ▸ Mounting type: Mounting flange

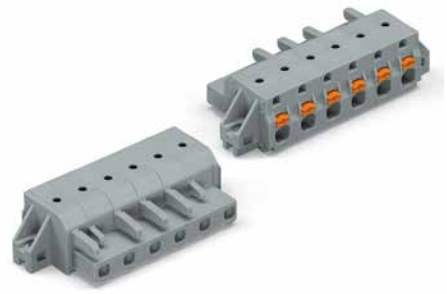

2231-206/031-000

Pole number	Item No.	PU
2	**2231-202/031-000**	50
3	**2231-203/031-000**	50
4	**2231-204/031-000**	50
5	**2231-205/031-000**	50
6	**2231-206/031-000**	25
7	**2231-207/031-000**	25
8	**2231-208/031-000**	25
9	**2231-209/031-000**	25
10	**2231-210/031-000**	25
11	**2231-211/031-000**	10
12	**2231-212/031-000**	10
13	**2231-213/031-000**	10
16	**2231-216/031-000**	10

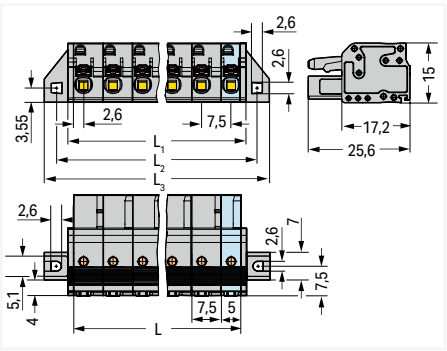

L = (pole no. – 1) x pin spacing + 5 mm
L_1 = L + 2.8 mm
L_2 = L + 8.8 mm
L_3 = L + 14.8 mm
2- to 3-pole female connectors – one latch only

PU = packaging unit; SPU = subpackaging unit; Dimensions in mm

Variants:
- Gold-plated or partially gold-plated contact surfaces
- Other versions (or variants) can be requested from WAGO Sales or configured at https://configurator.wago.com/.

1-conductor female connector ▸ *MCS* MIDI Classic ▸ 2232 Series

Pin spacing: 7.5 mm / 0.295 inches ▸ Actuation type: Lever ▸ Push-in CAGE CLAMP® ▸ Conductor entry direction to mating direction: 0 ° ▸ Color: gray



- Intuitive, tool-free lever actuation
- Universal connection for all conductor types
- Push-in termination of solid conductors and fine-stranded conductors with ferrules
- Installation height: just 13.3 mm
- Test opening at 0° and 90° to conductor entry
- Can be coded

Derating Curve
1-conductor female connector (2231-202/026-000) with THT male header (231-262/001-000)
Pin spacing: 7.5 mm / Conductor cross-section: 2.5 mm² "f-st"
Based on: EN 60512-5-2 / Reduction factor: 0.8

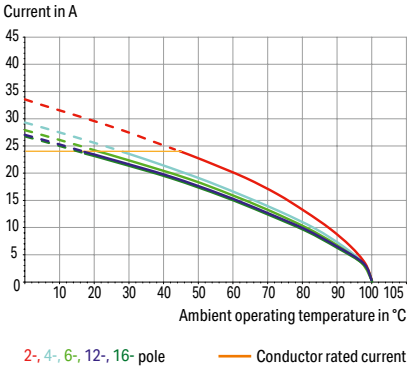

Electrical data			
Ratings per	**IEC/EN 60664-1**		
Overvoltage category	III	III	II
Pollution degree	3	2	2
Nominal voltage	1000 V	1000 V	1000 V
Rated impulse withstand voltage	8 kV	8 kV	8 kV
Rated current	23 A	23 A	23 A

Connection Data	
Connection technology	Push-in CAGE CLAMP®
Strip length	11 … 12 mm / 0.43 … 0.47 inches
Solid conductor	0.2 … 2.5 mm² / 24 … 12 AWG
Fine-stranded conductor	0.2 … 4 mm² / 24 … 12 AWG
Fine-stranded conductor; with insulated ferrule	0.25 … 2.5 mm²
Fine-stranded conductor; with uninsulated ferrule	0.25 … 2.5 mm²

Material data	
Material group	I
Insulation material (main housing)	Polyamide (PA66)
Flammability class per UL94	V0
Clamping spring material	Chrome-nickel spring steel (CrNi)
Contact material	Copper alloy
Contact Plating	Tin

Environmental requirements	
Limit temperature range	-60 … +100 °C
Processing temperature	-35 … +60 °C

Note:
The *MCS – MULTI CONNECTION SYSTEM* includes connectors without breaking capacity in accordance with DIN EN 61984. When used as intended, these connectors must not be connected/disconnected when live or under load.When used as intended, these connectors must not be connected/disconnected when live or under load. The circuit design should ensure header pins, which can be touched, are not live when unmated.

Coding	Page 814
Locking system	Page 821
See technical section for further information	
Approvals and corresponding ratings, visit www.wago.com	

1-conductor female connector ▸ *MCS* MIDI Classic ▸ 2232 Series

Pin spacing: 7.5 mm / 0.295 inches ▸ Actuation type: Lever ▸ Push-in CAGE CLAMP® ▸ Conductor entry direction to mating direction: 0 ° ▸ Color: gray

	Locking of plug-in connection: Lateral locking lever



2232-1206/327-000

Pole number	Item No.	PU
2	**2232-1202/327-000**	100
3	**2232-1203/327-000**	50
4	**2232-1204/327-000**	50

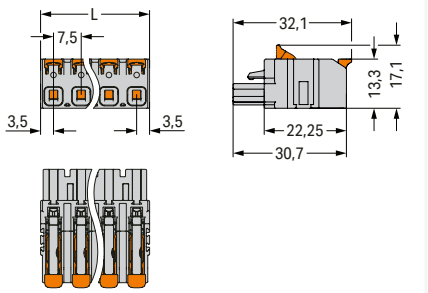

L = (pole no. x pin spacing) – 0.5 mm



2232-1206/038-000

Pole number	Item No.	PU
2	**2232-1202/038-000**	50
3	**2232-1203/038-000**	50
4	**2232-1204/038-000**	50

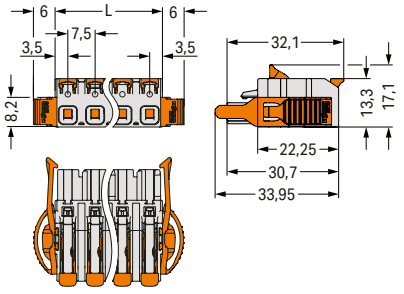

L = (pole no. – 1) x pin spacing + 7 mm

9

PU = packaging unit; SPU = subpackaging unit; Dimensions in mm

Variants:
- Gold-plated or partially gold-plated contact surfaces
- Other versions (or variants) can be requested from WAGO Sales or configured at https://configurator.wago.com/.

1-conductor male connector ▸ *MCS* MIDI Classic ▸ 731 Series

Pin spacing: 7.5 mm / 0.295 inches ▸ Actuation type: Operating tool ▸ CAGE CLAMP® ▸ Conductor entry direction to mating direction: 0 ° ▸ Color: gray

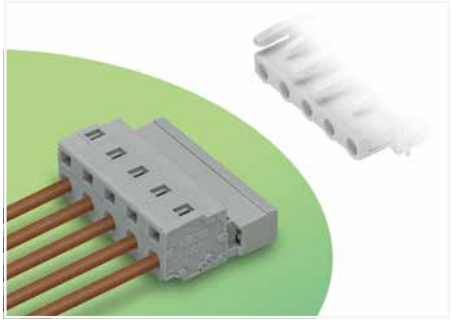

- Universal connection for all conductor types
- Easy cable pre-assembly and on-unit wiring via vertical and horizontal CAGE CLAMP® actuation
- For wire-to-wire and board-to-wire connections
- Versions available with snap-in mounting feet or flanges for panel or through-panel mounting
- With coding fingers

Derating Curve
1-conductor female connector (231-202/026-000) with
1-conductor male connector (731-602)
Pin spacing: 7.5 mm / Conductor cross-section: 2.5 mm² "f-st"
Based on: EN 60512-5-2 / Reduction factor: 0.8

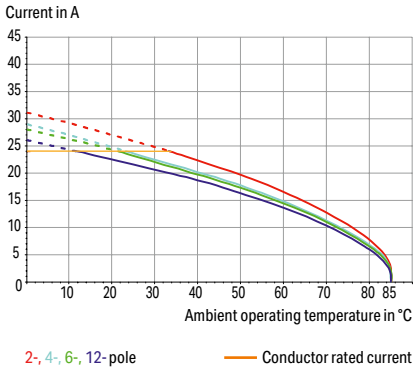

Electrical data			
Ratings per	**IEC/EN 60664-1**		
Overvoltage category	III	III	II
Pollution degree	3	2	2
Nominal voltage	500 V	630 V	1000 V
Rated impulse withstand voltage	6 kV	6 kV	6 kV
Rated current	12 A	12 A	12 A
Approvals per	**UL 1059**		
Use group	B	C	D
Rated voltage	300 V	-	300 V
Rated current	15 A	-	10 A
Approvals per	**CSA**		
Use group	B	C	D
Rated voltage	300 V	-	300 V
Rated current	15 A	-	10 A

Connection Data	
Connection technology	CAGE CLAMP®
Solid conductor	0.08 … 2.5 mm² / 28 … 12 AWG
Fine-stranded conductor	0.08 … 2.5 mm² / 28 … 12 AWG
Fine-stranded conductor; with insulated ferrule	0.25 … 1.5 mm²
Fine-stranded conductor; with uninsulated ferrule	0.25 … 2.5 mm²

Material data	
Material group	I
Insulation material (main housing)	Polyamide (PA66)
Flammability class per UL94	V0
Clamping spring material	Chrome-nickel spring steel (CrNi)
Contact material	Electrolytic copper (E_{Cu})
Contact Plating	Tin

Environmental requirements	
Limit temperature range	-60 … +100 °C
Processing temperature	-35 … +60 °C

Note:
The *MCS – MULTI CONNECTION SYSTEM* includes connectors without breaking capacity in accordance with DIN EN 61984. When used as intended, these connectors must not be connected/disconnected when live or under load.When used as intended, these connectors must not be connected/disconnected when live or under load. The circuit design should ensure header pins, which can be touched, are not live when unmated.

Coding	Page 814
Cover	Page 816
Ferrule	Page 1081
Installation	Page 818, 1071
Insulation stop	Page 817
Marking	Page 1067
Mounting adapter	Page 820
Strain relief	Page 828
Tool	Page 812, 1072
Direct marking	Page 628
See technical section for further information	
Approvals and corresponding ratings, visit www.wago.com	

1-conductor male connector ▸ *MCS* MIDI Classic ▸ 731 Series

Pin spacing: 7.5 mm / 0.295 inches ▸ Actuation type: Operating tool ▸ CAGE CLAMP® ▸ Conductor entry direction to mating direction: 0 ° ▸ Color: gray

	Mounting type: Panel mounting ▸ Mounting type: Snap-in foot	Mounting type: Feed-through mounting; Panel mounting ▸ Mounting type: Mounting flange
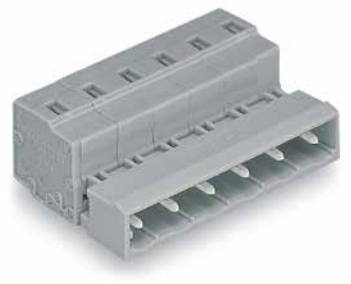		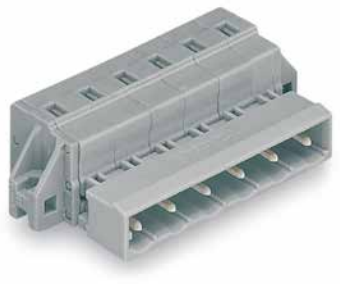

731-606

Pole number	Item No.	PU
2	731-602	100
3	731-603	100
4	731-604	50
5	731-605	50
6	731-606	50
7	731-607	50
8	731-608	25
9	731-609	25
10	731-610	25
11	731-611	25
12	731-612	25
13	731-613	10
16	731-616	10

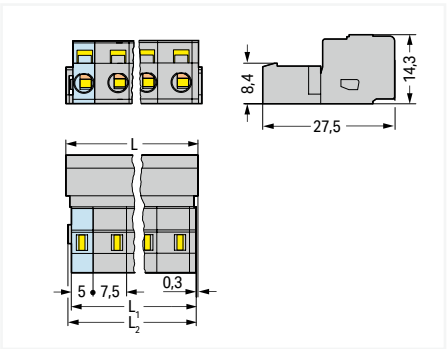

L = (pole no. – 1) x pin spacing + 8.2 mm
L_1 = L – 1.7 mm
L_2 = L – 1.2 mm

731-606/018-000

Pole number	Item No.	PU
2	731-602/018-000	100
3	731-603/018-000	100
4	731-604/018-000	50
5	731-605/018-000	50
6	731-606/018-000	50
7	731-607/018-000	50
8	731-608/018-000	25
9	731-609/018-000	25
10	731-610/018-000	25
11	731-611/018-000	25
12	731-612/018-000	25
13	731-613/018-000	10
16	731-616/018-000	10

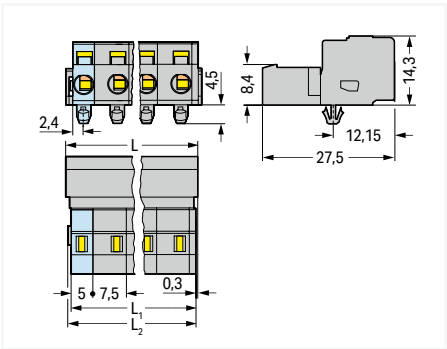

L = (pole no. – 1) x pin spacing + 8.2 mm
L_1 = L – 1.7 mm
L_2 = L – 1.2 mm

731-606/019-000

Pole number	Item No.	PU
2	731-602/019-000	50
3	731-603/019-000	50
4	731-604/019-000	50
5	731-605/019-000	50
6	731-606/019-000	25
7	731-607/019-000	25
8	731-608/019-000	25
9	731-609/019-000	25
10	731-610/019-000	25
11	731-611/019-000	10
12	731-612/019-000	10
13	731-613/019-000	10
16	731-616/019-000	10

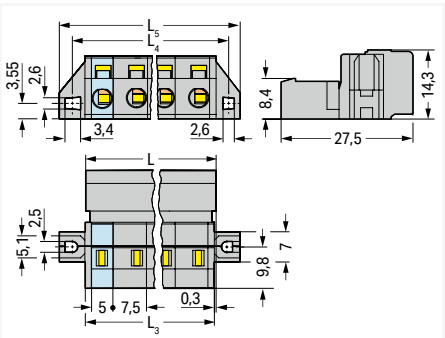

L = (pole no. – 1) x pin spacing + 8.2 mm
L_3 = L – 0.2 mm
L_4 = L_3 + 5.8 mm
L_5 = L_3 + 11.8 mm

9

PU = packaging unit; SPU = subpackaging unit; Dimensions in mm

Variants:
- Other pole numbers
- Gold-plated or partially gold-plated contact surfaces
- Other versions (or variants) can be requested from WAGO Sales or configured at https://configurator.wago.com/.

1-conductor male connector ▸ *MCS* MIDI Classic ▸ 731 Series

Pin spacing: 7.5 mm / 0.295 inches ▸ Actuation type: Operating tool ▸ CAGE CLAMP® ▸ Conductor entry direction to mating direction: 0 ° ▸ Color: gray

Mounting type: Feed-through mounting ▸ Mounting type: Snap-in flange



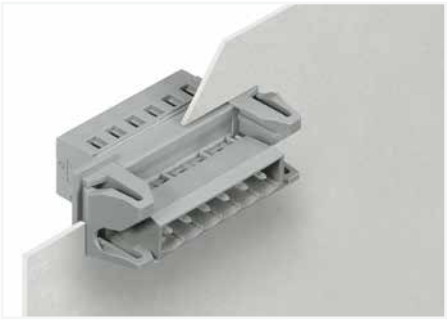

731-606/114-000

Male connector, with snap-in flanges, for feedthrough applications, for 0.5 … 2.5 mm plate thickness

Pole number	Item No.	PU
2	731-602/114-000	50
3	731-603/114-000	50
4	731-604/114-000	50
5	731-605/114-000	25
6	731-606/114-000	25
7	731-607/114-000	25
8	731-608/114-000	25
9	731-609/114-000	25
10	731-610/114-000	10
11	731-611/114-000	10
12	731-612/114-000	10
13	731-613/114-000	10
16	731-616/114-000	10

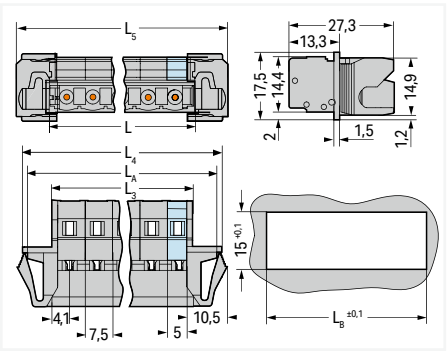

L = (pole no. – 1) x pin spacing + 8.2 mm
L_3 = L – 0.2 mm
L_4 = L_3 + 15.2 mm
L_5 = L_3 + 18 mm
L_A = L_3 + 12.6 mm
L_B = L_3 + 13.2 mm

PU = packaging unit; SPU = subpackaging unit; Dimensions in mm

Variants:
- Other pole numbers
- Gold-plated or partially gold-plated contact surfaces
- Other versions (or variants) can be requested from WAGO Sales or configured at https://configurator.wago.com/.

THT female header ▸ *MCS* MIDI Classic ▸ 232 Series

Pin spacing: 7.5 mm / 0.295 inches ▸ Solder pin dimensions: 0.6 x 1 mm ▸ Solder pin length: 5 mm ▸ Color: gray

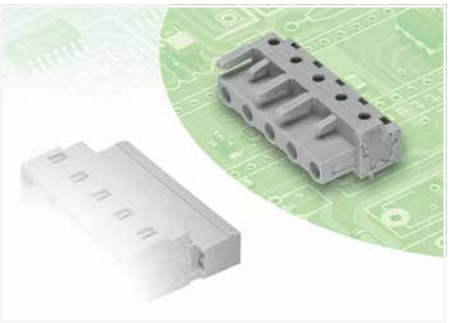

- Horizontal or vertical PCB mounting via straight or angled solder pins
- For board-to-board and board-to-wire connections
- Touch-proof PCB outputs
- Easy-to-identify PCB inputs and outputs
- With coding fingers

Derating Curve
THT female header (232-832) with
1-conductor male connector (731-602)
Pin spacing: 7.5 mm / Conductor cross-section: 2.5 mm² "f-st"
Based on: EN 60512-5-2 / Reduction factor: 0.8

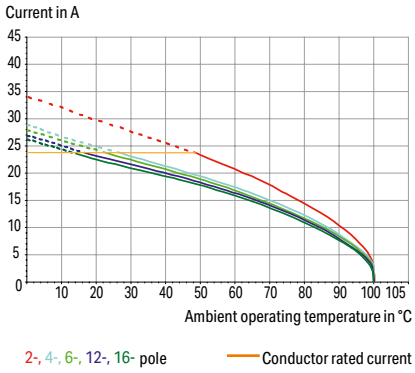

Electrical data			
Ratings per	**IEC/EN 60664-1**		
Overvoltage category	III	III	II
Pollution degree	3	2	2
Nominal voltage	500 V	630 V	1000 V
Rated impulse withstand voltage	6 kV	6 kV	6 kV
Rated current	12 A	12 A	12 A
Approvals per	**UL 1059**		
Use group	B	C	D
Rated voltage	300 V	-	300 V
Rated current	15 A	-	10 A
Approvals per	**CSA**		
Use group	B	C	D
Rated voltage	300 V	-	300 V
Rated current	15 A	-	10 A

Material data	
Material group	I
Insulation material (main housing)	Polyamide (PA66)
Flammability class per UL94	V0
Contact material	Copper alloy
Contact Plating	Tin

Mechanical data	
Solder pin arrangement	over the entire female connector (in-line)
Number of solder pins per potential	1
Solder pin length	5 mm
Solder pin dimensions	0.6 x 1 mm
Drilled hole diameter	1.3 $^{(+0.1)}$ mm

Environmental requirements	
Limit temperature range	-60 … +100 °C
Processing temperature	-35 … +60 °C

Note:
The *MCS – MULTI CONNECTION SYSTEM* includes connectors without breaking capacity in accordance with DIN EN 61984. When used as intended, these connectors must not be connected/disconnected when live or under load.When used as intended, these connectors must not be connected/disconnected when live or under load. The circuit design should ensure header pins, which can be touched, are not live when unmated.

Installation	Page 818, 1071
Test and measurement	Page 833, 1088
Cutout dimensions	Page 632
See technical section for further information	
Approvals and corresponding ratings, visit www.wago.com	

THT female header ▸ *MCS* MIDI Classic ▸ 232 Series

Pin spacing: 7.5 mm / 0.295 inches ▸ Solder pin dimensions: 0.6 x 1 mm ▸ Solder pin length: 5 mm ▸ Color: gray

Mating direction to the PCB: 0 °



232-836

Pole number	Item No.	PU
2	232-832	100
3	232-833	100
4	232-834	50
5	232-835	50
6	232-836	50
7	232-837	50
8	232-838	25
9	232-839	25
10	232-840	25
11	232-841	25
12	232-842	25
13	232-843	10
16	232-846	10

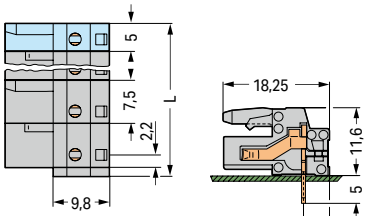

L = (pole no. – 1) x pin spacing + 5 mm + 1.5 mm
Distance to first solder pin: 2.2 mm
2- to 3-pole female connectors – one latch only

Mating direction to the PCB: 90 °



232-736

Pole number	Item No.	PU
2	232-732	100
3	232-733	100
4	232-734	50
5	232-735	50
6	232-736	50
7	232-737	50
8	232-738	25
9	232-739	25
10	232-740	25
11	232-741	25
12	232-742	25
13	232-743	10
16	232-746	10

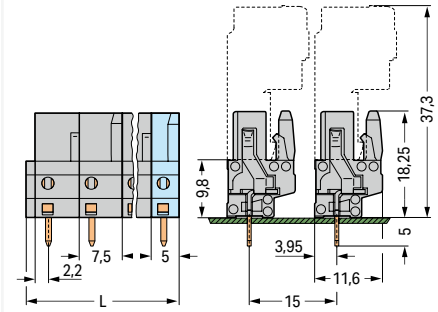

L = (pole no. – 1) x pin spacing + 5 mm + 1.5 mm
2- to 3-pole female connectors – one latch only

Locking of plug-in connection: Locking lever ▸ Mating direction to the PCB: 0 °



232-836/039-000

Pole number	Item No.	PU
2	232-832/039-000	50
3	232-833/039-000	50
4	232-834/039-000	50
5	232-835/039-000	50
6	232-836/039-000	25
7	232-837/039-000	25
8	232-838/039-000	25
9	232-839/039-000	25
10	232-840/039-000	25
11	232-841/039-000	10
12	232-842/039-000	10
13	232-843/039-000	10
16	232-846/039-000	10

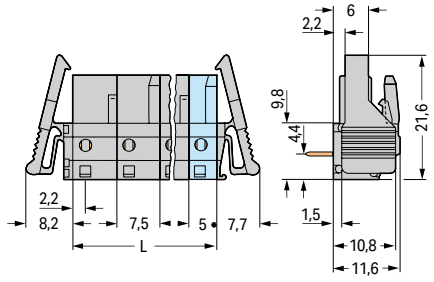

L = (pole no. – 1) x pin spacing + 5 mm
Distance to first solder pin: 2.2 mm
2- to 3-pole female connectors – one latch only

9

PU = packaging unit; SPU = subpackaging unit; Dimensions in mm

Variants:
- Other pole numbers
- 3.8 mm pin projection for male headers with straight solder pins
- Gold-plated or partially gold-plated contact surfaces
- Other versions (or variants) can be requested from WAGO Sales or configured at https://configurator.wago.com/.

THT female header ▸ *MCS* MIDI Classic ▸ 232 Series

Pin spacing: 7.5 mm / 0.295 inches ▸ Solder pin dimensions: 0.6 x 1 mm ▸ Solder pin length: 5 mm ▸ Color: gray

Locking of plug-in connection: Locking lever ▸ Mating direction to the PCB: 90 °



232-736/039-000

Pole number	Item No.	PU
2	232-732/039-000	50
3	232-733/039-000	50
4	232-734/039-000	50
5	232-735/039-000	50
6	232-736/039-000	25
7	232-737/039-000	25
8	232-738/039-000	25
9	232-739/039-000	25
10	232-740/039-000	25
11	232-741/039-000	10
12	232-742/039-000	10
13	232-743/039-000	10
16	232-746/039-000	10

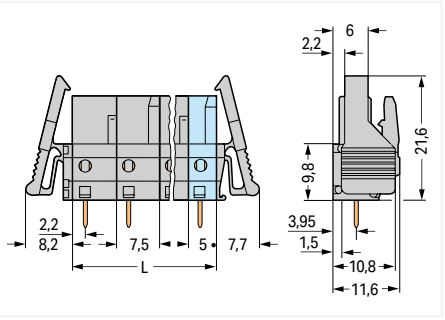

L = (pole no. – 1) x pin spacing + 5 mm
2- to 3-pole female connectors – one latch only

Mounting type: Feed-through mounting; Panel mounting ▸ Mounting type: Mounting flange ▸ Mating direction to the PCB: 0 °



232-836/031-000

Pole number	Item No.	PU
2	232-832/031-000	50
3	232-833/031-000	50
4	232-834/031-000	50
5	232-835/031-000	50
6	232-836/031-000	25
7	232-837/031-000	25
8	232-838/031-000	25
9	232-839/031-000	25
10	232-840/031-000	25
11	232-841/031-000	10
12	232-842/031-000	10
13	232-843/031-000	10
16	232-846/031-000	10

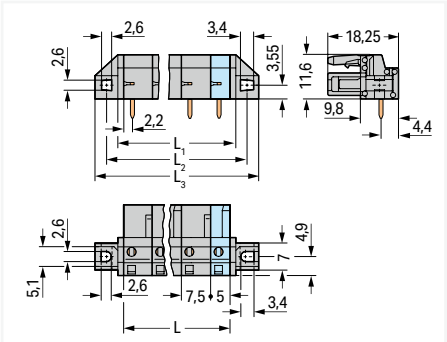

L = (pole no. – 1) x pin spacing + 5 mm
L1 = L + 3 mm
L2 = L + 8.8 mm
L3 = L + 14.8 mm
2- to 3-pole female connectors – one latch only

Mounting type: Feed-through mounting; Panel mounting ▸ Mounting type: Mounting flange ▸ Mating direction to the PCB: 90 °



232-736/031-000

Pole number	Item No.	PU
2	232-732/031-000	50
3	232-733/031-000	50
4	232-734/031-000	50
5	232-735/031-000	50
6	232-736/031-000	25
7	232-737/031-000	25
8	232-738/031-000	25
9	232-739/031-000	25
10	232-740/031-000	25
11	232-741/031-000	10
12	232-742/031-000	25
13	232-743/031-000	10
16	232-746/031-000	10

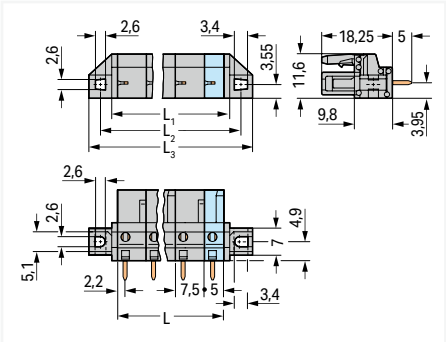

L = (pole no. – 1) x pin spacing + 5 mm
L1 = L + 3 mm
L2 = L + 8.8 mm
L3 = L + 14.8 mm
2- to 3-pole female connectors – one latch only

PU = packaging unit; SPU = subpackaging unit; Dimensions in mm

Variants:
- Other pole numbers
- 3.8 mm pin projection for male headers with straight solder pins
- Gold-plated or partially gold-plated contact surfaces
- Other versions (or variants) can be requested from WAGO Sales or configured at https://configurator.wago.com/.

THT female header ▸ *MCS* MIDI Classic ▸ 232 Series

Pin spacing: 7.5 mm / 0.295 inches ▸ Solder pin dimensions: 0.6 x 1 mm ▸ Solder pin length: 5 mm ▸ Color: gray

Mounting type: Flush feed-through mounting; Panel mounting ▸ Mounting type: Mounting flange ▸ Mating direction to the PCB: 0 °



232-836/047-000

Pole number	Item No.	PU
2	232-832/047-000	50
3	232-833/047-000	50
4	232-834/047-000	50
5	232-835/047-000	50
6	232-836/047-000	25
7	232-837/047-000	25
8	232-838/047-000	25
9	232-839/047-000	25
10	232-840/047-000	25
11	232-841/047-000	10
12	232-842/047-000	10
13	232-843/047-000	10
16	232-846/047-000	10

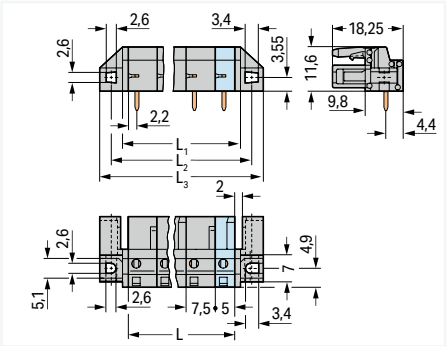

L = (pole no. – 1) x pin spacing + 5 mm
L1 = L + 3 mm
L2 = L + 8.8 mm
L3 = L + 14.8 mm
2- to 3-pole female connectors – one latch only

Mounting type: Flush feed-through mounting; Panel mounting ▸ Mounting type: Mounting flange ▸ Mating direction to the PCB: 90 °

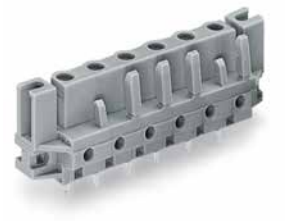

232-736/047-000

Pole number	Item No.	PU
2	232-732/047-000	100
3	232-733/047-000	50
4	232-734/047-000	50
5	232-735/047-000	50
6	232-736/047-000	25
7	232-737/047-000	50
8	232-738/047-000	25
9	232-739/047-000	25
10	232-740/047-000	25
11	232-741/047-000	25
12	232-742/047-000	25
13	232-743/047-000	10
16	232-746/047-000	10

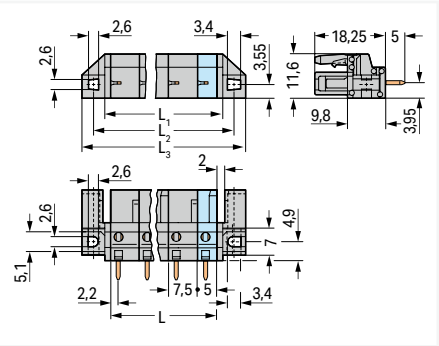

L = (pole no. – 1) x pin spacing + 5 mm
L1 = L + 3 mm
L2 = L + 8.8 mm
L3 = L + 14.8 mm
2- to 3-pole female connectors – one latch only

PU = packaging unit; SPU = subpackaging unit; Dimensions in mm

Variants:
- Other pole numbers
- 3.8 mm pin projection for male headers with straight solder pins
- Gold-plated or partially gold-plated contact surfaces
- Other versions (or variants) can be requested from WAGO Sales or configured at https://configurator.wago.com/.

THT male header ▸ *MCS* MIDI Classic ▸ 231 Series

Pin spacing: 7.5 mm / 0.295 inches ▸ Solder pin dimensions: 1 x 1 mm ▸ Color: gray

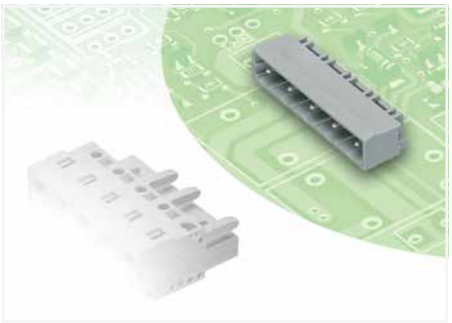

- Horizontal or vertical PCB mounting via straight or angled solder pins
- Pin cross-section: 1 x 1 mm
- With coding fingers

Derating Curve
1-conductor female connector (231-202/026-000) with THT male header (231-862/001-000)
Pin spacing: 7.5 mm / Conductor cross-section: 2.5 mm² "f-st"
Based on: EN 60512-5-2 / Reduction factor: 0.8

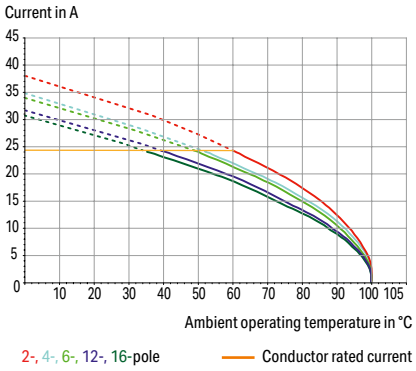

Electrical data			
Ratings per	**IEC/EN 60664-1**		
Overvoltage category	III	III	II
Pollution degree	3	2	2
Nominal voltage	500 V	630 V	1000 V
Rated impulse withstand voltage	6 kV	6 kV	6 kV
Rated current	12 A	12 A	12 A
Approvals per	**UL 1059**		
Use group	B	C	D
Rated voltage	300 V	-	300 V
Rated current	10 A	-	10 A
Approvals per	**CSA**		
Use group	B	C	D
Rated voltage	300 V	-	300 V
Rated current	10 A	-	10 A

Material data	
Material group	I
Insulation material (main housing)	Polyamide (PA66)
Flammability class per UL94	V0
Contact material	Electrolytic copper (E_{Cu})
Contact Plating	Tin

Mechanical data	
Solder pin arrangement	over the entire male connector (in-line)
Number of solder pins per potential	1
Solder pin dimensions	1 x 1 mm
Drilled hole diameter	1.4 $^{(+0.1)}$ mm

Environmental requirements	
Limit temperature range	-60 … +100 °C
Processing temperature	-35 … +60 °C

Note:
The *MCS – MULTI CONNECTION SYSTEM* includes connectors without breaking capacity in accordance with DIN EN 61984. When used as intended, these connectors must not be connected/disconnected when live or under load.When used as intended, these connectors must not be connected/disconnected when live or under load. The circuit design should ensure header pins, which can be touched, are not live when unmated.

Coding	Page 814
Installation	Page 818, 1071
Cutout dimensions	Page 632
See technical section for further information	
Approvals and corresponding ratings, visit www.wago.com	

THT male header ▸ *MCS* MIDI Classic ▸ 231 Series

Pin spacing: 7.5 mm / 0.295 inches ▸ Solder pin dimensions: 1 x 1 mm ▸ Color: gray

Mating direction to the PCB: 0 ° ▸ Solder pin length: 3.8 mm



231-836/001-000

Pole number	Item No.	PU
2	231-832/001-000	200
3	231-833/001-000	200
4	231-834/001-000	100
5	231-835/001-000	100
6	231-836/001-000	100
7	231-837/001-000	50
8	231-838/001-000	50
9	231-839/001-000	50
10	231-840/001-000	50
11	231-841/001-000	50
12	231-842/001-000	50
13	231-843/001-000	50
16	231-846/001-000	50

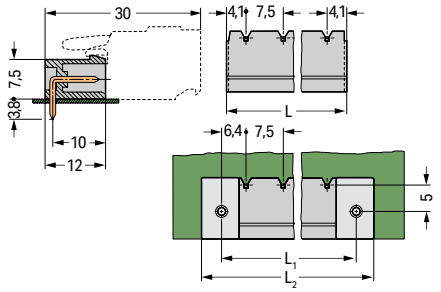

L = (pole no. – 1) x pin spacing + 8.2 mm
L_1 = L + 5 mm
L_2 = L_1 + 7.4 mm

Mating direction to the PCB: 90 ° ▸ Solder pin length: 5 mm



231-236/001-000

Pole number	Item No.	PU
2	231-232/001-000	200
3	231-233/001-000	200
4	231-234/001-000	100
5	231-235/001-000	100
6	231-236/001-000	100
7	231-237/001-000	50
8	231-238/001-000	50
9	231-239/001-000	50
10	231-240/001-000	50
11	231-241/001-000	50
12	231-242/001-000	50
13	231-243/001-000	50
16	231-246/001-000	50

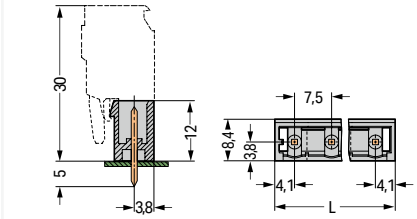

L = (pole no. – 1) x pin spacing + 8.2 mm

Mounting type: Feed-through mounting; Panel mounting ▸ Mounting type: Mounting flange ▸ Mating direction to the PCB: 0 ° ▸ Solder pin length: 3.8 mm



231-840/040-000

Pole number	Item No.	PU
10	231-840/040-000	50

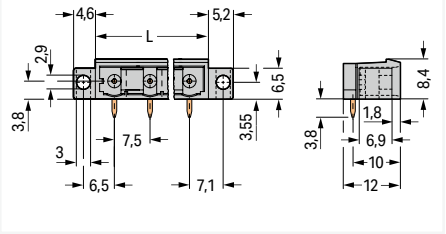

L = (pole no. – 1) x pin spacing + 8.2 mm

9

PU = packaging unit; SPU = subpackaging unit; Dimensions in mm

Variants:
- Other pole numbers
- 3.8 mm pin projection for male headers with straight solder pins
- Gold-plated or partially gold-plated contact surfaces
- Other versions (or variants) can be requested from WAGO Sales or configured at https://configurator.wago.com/.

THT male header ▸ *MCS* MIDI Classic ▸ 231 Series

Pin spacing: 7.5 mm / 0.295 inches ▸ Solder pin dimensions: 1 x 1 mm ▸ Color: gray

Mounting type: Feed-through mounting; Panel mounting ▸ Mounting type: Mounting flange ▸ Mating direction to the PCB: 90 ° ▸ Solder pin length: 5 mm

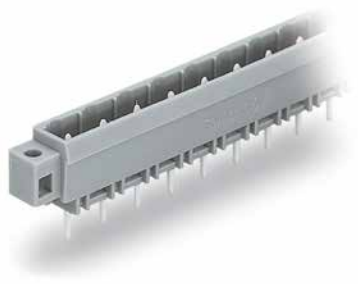

231-240/040-000

Pole number	Item No.	PU
10	**231-240/040-000**	25

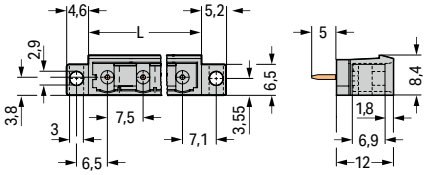

L = (pole no. – 1) x pin spacing + 8.2 mm

9

PU = packaging unit; SPU = subpackaging unit; Dimensions in mm

Variants:

- Other pole numbers
- 3.8 mm pin projection for male headers with straight solder pins
- Gold-plated or partially gold-plated contact surfaces
- Other versions (or variants) can be requested from WAGO Sales or configured at https://configurator.wago.com/.

THT male header ▸ *MCS* MIDI Classic ▸ 231 Series

Pin spacing: 7.5 mm / 0.295 inches ▸ Solder pin dimensions: 1.2 x 1.2 mm ▸ Color: gray

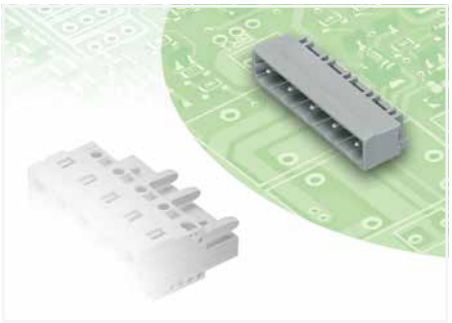

- Horizontal or vertical PCB mounting via straight or angled solder pins
- 1.2 x 1.2 mm solder pins allow nominal current up to 16 A, enhancing stability of shorter headers
- With coding fingers

Derating Curve
1-conductor female connector (231-202/026-000) with THT male header (231-862/001-000)
Pin spacing: 7.5 mm / Conductor cross-section: 2.5 mm² "f-st"
Based on: EN 60512-5-2 / Reduction factor: 0.8

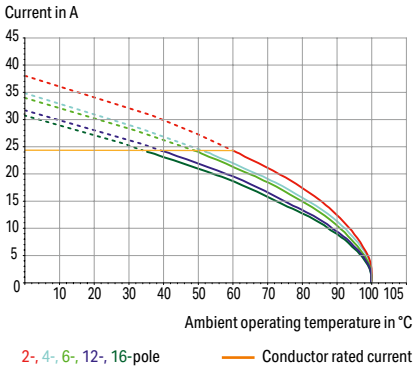

Electrical data			
Ratings per	**IEC/EN 60664-1**		
Overvoltage category	III	III	II
Pollution degree	3	2	2
Nominal voltage	500 V	630 V	1000 V
Rated impulse withstand voltage	6 kV	6 kV	6 kV
Rated current	16 A	16 A	16 A
Approvals per	**UL 1059**		
Use group	B	C	D
Rated voltage	300 V	-	300 V
Rated current	15 A	-	10 A
Approvals per	**CSA**		
Use group	B	C	D
Rated voltage	300 V	-	300 V
Rated current	15 A	-	10 A

Material data	
Material group	I
Insulation material (main housing)	Polyamide (PA66)
Flammability class per UL94	V0
Contact material	Electrolytic copper (E_{Cu})
Contact Plating	Tin

Mechanical data	
Solder pin arrangement	over the entire male connector (in-line)
Number of solder pins per potential	1
Solder pin dimensions	1.2 x 1.2 mm
Drilled hole diameter	1.7 $^{(+0.1)}$ mm

Environmental requirements	
Limit temperature range	-60 … +100 °C
Processing temperature	-35 … +60 °C

Note:
The *MCS – MULTI CONNECTION SYSTEM* includes connectors without breaking capacity in accordance with DIN EN 61984. When used as intended, these connectors must not be connected/disconnected when live or under load.When used as intended, these connectors must not be connected/disconnected when live or under load. The circuit design should ensure header pins, which can be touched, are not live when unmated.

Coding	Page 814
Installation	Page 818, 1071
Cutout dimensions	Page 632
See technical section for further information	
Approvals and corresponding ratings, visit www.wago.com	

THT male header ▸ *MCS* MIDI Classic ▸ 231 Series

Pin spacing: 7.5 mm / 0.295 inches ▸ Solder pin dimensions: 1.2 x 1.2 mm ▸ Color: gray

Mating direction to the PCB: 0 ° ▸ Solder pin length: 3.8 mm



231-866/001-000

Pole number	Item No.	PU (SPU)
2	**231-862/001-000**	200
3	**231-863/001-000**	200
4	**231-864/001-000**	100
5	**231-865/001-000**	100
6	**231-866/001-000**	100
7	**231-867/001-000**	50
8	**231-868/001-000**	50
9	**231-869/001-000**	50
10	**231-870/001-000**	50 (1)
11	**231-871/001-000**	50
12	**231-872/001-000**	50
13	**231-873/001-000**	50
16	**231-876/001-000**	50

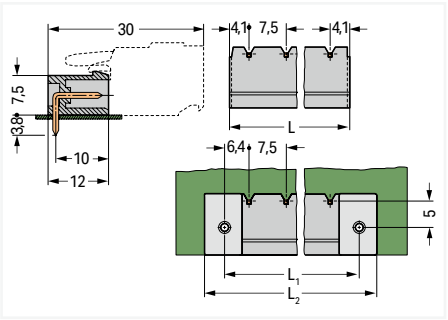

L = (pole no. – 1) x pin spacing + 8.2 mm
L_1 = L + 5 mm
L_2 = L_1 + 7.4 mm

Mating direction to the PCB: 90 ° ▸ Solder pin length: 5 mm



231-266/001-000

Pole number	Item No.	PU
2	**231-262/001-000**	200
3	**231-263/001-000**	200
4	**231-264/001-000**	100
5	**231-265/001-000**	100
6	**231-266/001-000**	100
7	**231-267/001-000**	50
8	**231-268/001-000**	50
9	**231-269/001-000**	50
10	**231-270/001-000**	50
11	**231-271/001-000**	50
12	**231-272/001-000**	50
13	**231-273/001-000**	50
16	**231-276/001-000**	50

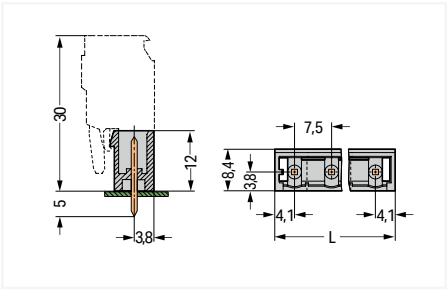

L = (pole no. – 1) x pin spacing + 8.2 mm

Mounting type: Feed-through mounting; Panel mounting ▸ Mounting type: Mounting flange ▸ Mating direction to the PCB: 0 ° ▸ Solder pin length: 3.8 mm



231-870/040-000

Pole number	Item No.	PU
10	**231-870/040-000**	50

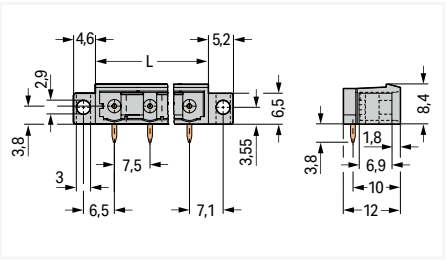

L = (pole no. – 1) x pin spacing + 8.2 mm

9

PU = packaging unit; SPU = subpackaging unit; Dimensions in mm

Variants:

- Other pole numbers
- 3.8 mm pin projection for male headers with straight solder pins
- Gold-plated or partially gold-plated contact surfaces
- Other versions (or variants) can be requested from WAGO Sales or configured at https://configurator.wago.com/.

THT male header ▸ *MCS* MIDI Classic ▸ 231 Series

Pin spacing: 7.5 mm / 0.295 inches ▸ Solder pin dimensions: 1.2 x 1.2 mm ▸ Color: gray

Mounting type: Feed-through mounting; Panel mounting ▸ Mounting type: Mounting flange ▸ Mating direction to the PCB: 90 ° ▸ Solder pin length: 5 mm

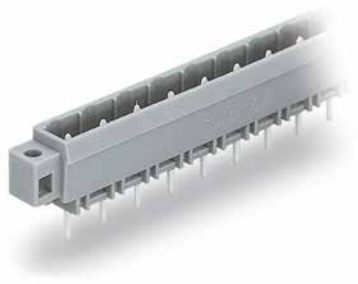

231-270/040-000

Pole number	Item No.	PU
10	**231-270/040-000**	50

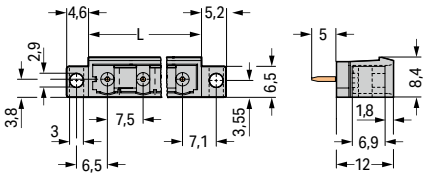

L = (pole no. – 1) x pin spacing + 8.2 mm

9

PU = packaging unit; SPU = subpackaging unit; Dimensions in mm

Variants:

- Other pole numbers
- 3.8 mm pin projection for male headers with straight solder pins
- Gold-plated or partially gold-plated contact surfaces
- Other versions (or variants) can be requested from WAGO Sales or configured at https://configurator.wago.com/.

THR male header ▸ *MCS* MIDI Classic ▸ 231 Series

Pin spacing: 7.5 mm / 0.295 inches ▸ Solder pin dimensions: 1 x 1 mm ▸ Color: black

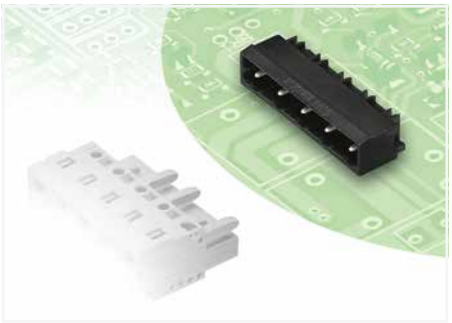

- THR male headers for reflow soldering in SMT applications
- Available in tape-and-reel packaging for automated pick-and-place PCB assembly
- Also available in bulk packaging for manual placement
- Male headers may be mounted horizontally or vertically
- With coding fingers

Derating Curve
1-conductor female connector (231-202/026-000) with THR male header (231-832/001-000/105-604)
Pin spacing: 7.5 mm / Conductor cross-section: 2.5 mm² "f-st"
Based on: EN 60512-5-2 / Reduction factor: 0.8

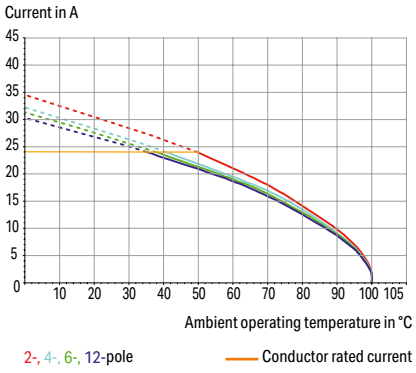

Electrical data			
Ratings per	**IEC/EN 60664-1**		
Overvoltage category	III	III	II
Pollution degree	3	2	2
Nominal voltage	500 V	630 V	1000 V
Rated impulse withstand voltage	6 kV	6 kV	6 kV
Rated current	12 A	12 A	12 A
Approvals per	**UL 1059**		
Use group	B	C	D
Rated voltage	300 V	-	300 V
Rated current	10 A	-	10 A
Approvals per	**CSA**		
Use group	B	C	D
Rated voltage	300 V	-	300 V
Rated current	10 A	-	10 A

Material data	
Material group	I
Insulation material (main housing)	Polyphthalamide (PPA GF)
Flammability class per UL94	V0
Contact material	Electrolytic copper (E_{Cu})
Contact Plating	Tin

Mechanical data	
Solder pin arrangement	over the entire male connector (in-line)
Number of solder pins per potential	1
Solder pin length	2.4 mm
Solder pin dimensions	1 x 1 mm
Plated through-hole diameter (THR)	1.4 $^{(+0.1)}$ mm

Environmental requirements	
Limit temperature range	-60 … +100 °C
Processing temperature	-35 … +60 °C

Note:
The *MCS – MULTI CONNECTION SYSTEM* includes connectors without breaking capacity in accordance with DIN EN 61984. When used as intended, these connectors must not be connected/disconnected when live or under load.When used as intended, these connectors must not be connected/disconnected when live or under load. The circuit design should ensure header pins, which can be touched, are not live when unmated.

THR soldering	Page 422
Coding	Page 814
Installation	Page 818
See technical section for further information	
Approvals and corresponding ratings, visit www.wago.com	

THR male header ▸ *MCS* MIDI Classic ▸ 231 Series

Pin spacing: 7.5 mm / 0.295 inches ▸ Solder pin dimensions: 1 x 1 mm ▸ Color: black

Mating direction to the PCB: 0 °

Suitable for automated assembly



231-836/001-000/105-604

Pole number	Item No.	PU
2	231-832/001-000/105-604	200
3	231-833/001-000/105-604	200
4	231-834/001-000/105-604	100
5	231-835/001-000/105-604	100
6	231-836/001-000/105-604	100
7	231-837/001-000/105-604	50
8	231-838/001-000/105-604	50
9	231-839/001-000/105-604	50
10	231-840/001-000/105-604	50
11	231-841/001-000/105-604	50
12	231-842/001-000/105-604	50



231-865/001-000/105-604/997-407

Pole number	Tape width	Item No.	PU
2	32 mm	231-832/001-000/105-604/997-405	170
3	56 mm	231-833/001-000/105-604/997-407	170
4	56 mm	231-834/001-000/105-604/997-407	170
5	56 mm	231-835/001-000/105-604/997-407	170

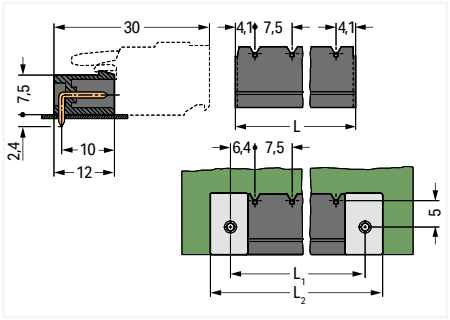

L = (pole no. – 1) x pin spacing + 8.2 mm
L_1 = L + 5 mm
L_2 = L_1 + 7.4 mm

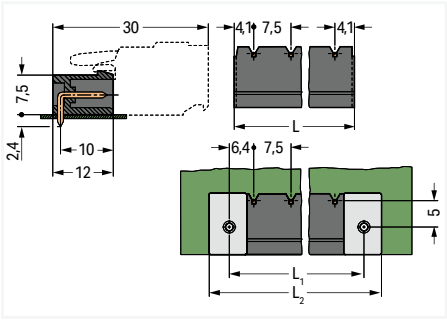

L = (pole no. – 1) x pin spacing + 8.2 mm
L_1 = L + 5 mm
L_2 = L_1 + 7.4 mm

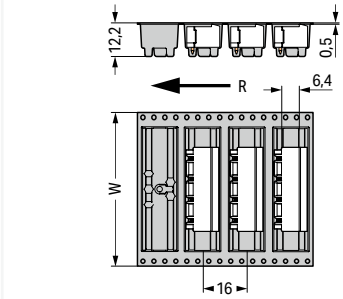

W = tape width
R = feed direction

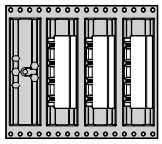

Position with even number of poles

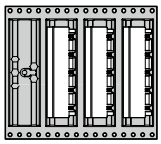

Position with odd number of poles

Pin position in tape-and-reel packaging

PU = packaging unit; SPU = subpackaging unit; Dimensions in mm

Variants:
- Other pole numbers
- Gold-plated or partially gold-plated contact surfaces
- Other versions (or variants) can be requested from WAGO Sales or configured at https://configurator.wago.com/.

THR male header ▸ *MCS* MIDI Classic ▸ 231 Series

Pin spacing: 7.5 mm / 0.295 inches ▸ Solder pin dimensions: 1 x 1 mm ▸ Color: black

Mating direction to the PCB: 90 °



231-236/001-000/105-604

Pole number	Item No.	PU
2	231-232/001-000/105-604	200
3	231-233/001-000/105-604	200
4	231-234/001-000/105-604	100
5	231-235/001-000/105-604	100
6	231-236/001-000/105-604	100
7	231-237/001-000/105-604	50
8	231-238/001-000/105-604	50
9	231-239/001-000/105-604	50
10	231-240/001-000/105-604	50
11	231-241/001-000/105-604	50
12	231-242/001-000/105-604	50

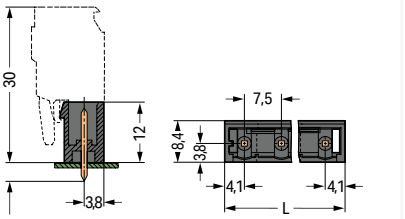

L = (pole no. – 1) x pin spacing + 8.2 mm

Suitable for automated assembly



231-235/001-000/105-604/997-407

Pole number	Tape width	Item No.	PU
2	32 mm	231-232/001-000/105-604/997-405	170
3	56 mm	231-233/001-000/105-604/997-407	170
4	56 mm	231-234/001-000/105-604/997-407	170
5	56 mm	231-235/001-000/105-604/997-407	170
6	88 mm	231-236/001-000/105-604/997-409	170
7	88 mm	231-237/001-000/105-604/997-409	170
8	88 mm	231-238/001-000/105-604/997-409	170
9	88 mm	231-239/001-000/105-604/997-409	170

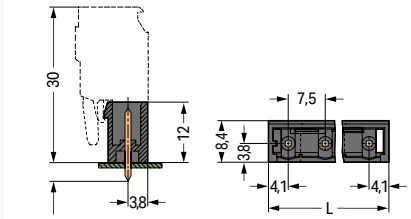

L = (pole no. – 1) x pin spacing + 8.2 mm

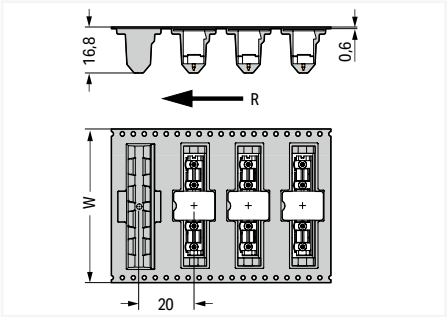

W = tape width
R = feed direction

PU = packaging unit; SPU = subpackaging unit; Dimensions in mm

Variants:
- Other pole numbers
- Gold-plated or partially gold-plated contact surfaces
- Other versions (or variants) can be requested from WAGO Sales or configured at https://configurator.wago.com/.

THR male header ▸ *MCS* MIDI Classic ▸ 231 Series

Pin spacing: 7.5 mm / 0.295 inches ▸ Solder pin dimensions: 1.2 x 1.2 mm ▸ Color: black

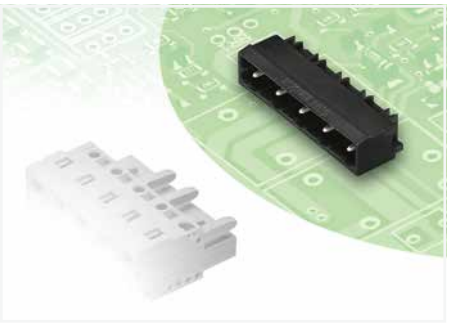

- THR male headers for reflow soldering in SMT applications
- Available in tape-and-reel packaging for automated pick-and-place PCB assembly
- 1.2 x 1.2 mm solder pins allow nominal current up to 16 A, enhancing stability of shorter headers
- Also available in bulk packaging for manual placement
- Male headers may be mounted horizontally or vertically
- With coding fingers

Derating Curve
1-conductor female connector (231-202/026-000) with THR male header (231-832/001-000/105-604)
Pin spacing: 7.5 mm / Conductor cross-section: 2.5 mm² "f-st"
Based on: EN 60512-5-2 / Reduction factor: 0.8

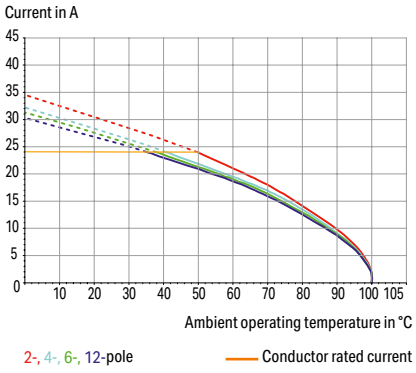

Electrical data			
Ratings per	**IEC/EN 60664-1**		
Overvoltage category	III	III	II
Pollution degree	3	2	2
Nominal voltage	500 V	630 V	1000 V
Rated impulse withstand voltage	6 kV	6 kV	6 kV
Rated current	16 A	16 A	16 A
Approvals per	**UL 1059**		
Use group	B	C	D
Rated voltage	300 V	-	300 V
Rated current	10 A	-	10 A
Approvals per	**CSA**		
Use group	B	C	D
Rated voltage	300 V	-	300 V
Rated current	10 A	-	10 A

Material data	
Material group	I
Insulation material (main housing)	Polyphthalamide (PPA GF)
Flammability class per UL94	V0
Contact material	Electrolytic copper (E_{Cu})
Contact Plating	Tin

Mechanical data	
Solder pin arrangement	over the entire male connector (in-line)
Number of solder pins per potential	1
Solder pin length	2.4 mm
Solder pin dimensions	1.2 x 1.2 mm
Plated through-hole diameter (THR)	1.7 $^{(+0.1)}$ mm

Environmental requirements	
Limit temperature range	-60 … +100 °C
Processing temperature	-35 … +60 °C

Note:
The *MCS – MULTI CONNECTION SYSTEM* includes connectors without breaking capacity in accordance with DIN EN 61984. When used as intended, these connectors must not be connected/disconnected when live or under load.When used as intended, these connectors must not be connected/disconnected when live or under load. The circuit design should ensure header pins, which can be touched, are not live when unmated.

THR soldering	Page 422
Coding	Page 815
See technical section for further information	
Approvals and corresponding ratings, visit www.wago.com	

THR male header ▸ *MCS* MIDI Classic ▸ 231 Series

Pin spacing: 7.5 mm / 0.295 inches ▸ Solder pin dimensions: 1.2 x 1.2 mm ▸ Color: black

Mating direction to the PCB: 0 °

Suitable for automated assembly

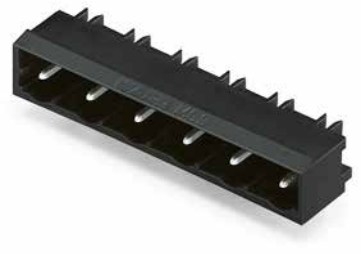

231-866/001-000/105-604

Pole number	Item No.	PU
2	231-862/001-000/105-604	200
3	231-863/001-000/105-604	200
4	231-864/001-000/105-604	100
5	231-865/001-000/105-604	100
6	231-866/001-000/105-604	100
7	231-867/001-000/105-604	50
8	231-868/001-000/105-604	50
9	231-869/001-000/105-604	50
10	231-870/001-000/105-604	50
11	231-871/001-000/105-604	50
12	231-872/001-000/105-604	50



231-865/001-000/105-604/997-407

Pole number	Tape width	Item No.	PU
2	32 mm	231-862/001-000/105-604/997-405	170
3	56 mm	231-863/001-000/105-604/997-407	170
4	56 mm	231-864/001-000/105-604/997-407	170
5	56 mm	231-865/001-000/105-604/997-407	170

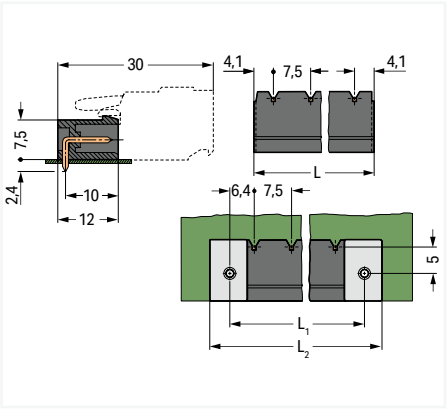

L = (pole no. – 1) x pin spacing + 8.2 mm
L_1 = L + 5 mm
L_2 = L_1 + 7.4 mm

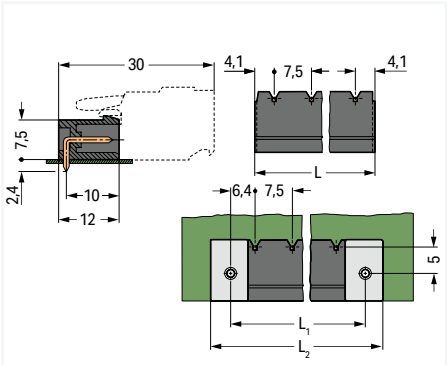

L = (pole no. – 1) x pin spacing + 8.2 mm
L_1 = L + 5 mm
L_2 = L_1 + 7.4 mm

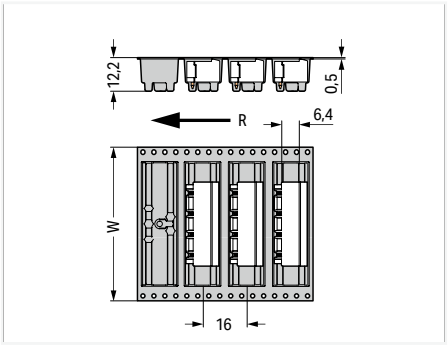

W = tape width
R = feed direction

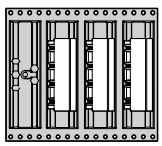

Position with even number of poles

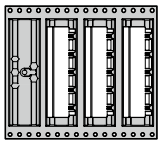

Position with odd number of poles

Pin position in tape-and-reel packaging

PU = packaging unit; SPU = subpackaging unit; Dimensions in mm

Variants:
- Other pole numbers
- Gold-plated or partially gold-plated contact surfaces
- Other versions (or variants) can be requested from WAGO Sales or configured at https://configurator.wago.com/.

THR male header ▸ *MCS* MIDI Classic ▸ 231 Series

Pin spacing: 7.5 mm / 0.295 inches ▸ Solder pin dimensions: 1.2 x 1.2 mm ▸ Color: black

Mating direction to the PCB: 90 °

Suitable for automated assembly



231-266/001-000/105-604

Pole number	Item No.	PU
2	231-262/001-000/105-604	200
3	231-263/001-000/105-604	200
4	231-264/001-000/105-604	100
5	231-265/001-000/105-604	100
6	231-266/001-000/105-604	50
7	231-267/001-000/105-604	50
8	231-268/001-000/105-604	50
9	231-269/001-000/105-604	50
10	231-270/001-000/105-604	50
11	231-271/001-000/105-604	50
12	231-272/001-000/105-604	50



231-235/001-000/105-604/997-407

Pole number	Tape width	Item No.	PU
2	32 mm	231-262/001-000/105-604/997-405	170
3	56 mm	231-263/001-000/105-604/997-407	170
4	56 mm	231-264/001-000/105-604/997-407	170
5	56 mm	231-265/001-000/105-604/997-407	170
6	88 mm	231-266/001-000/105-604/997-409	170
7	88 mm	231-267/001-000/105-604/997-409	170
8	88 mm	231-268/001-000/105-604/997-409	170
9	88 mm	231-269/001-000/105-604/997-409	170

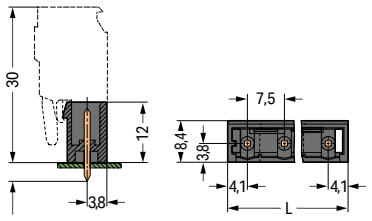

L = (pole no. – 1) x pin spacing + 8.2 mm

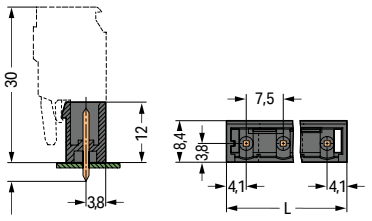

L = (pole no. – 1) x pin spacing + 8.2 mm

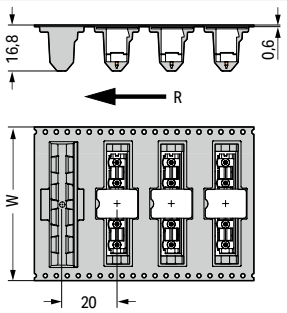

W = tape width
R = feed direction

PU = packaging unit; SPU = subpackaging unit; Dimensions in mm

Variants:
- Other pole numbers
- Gold-plated or partially gold-plated contact surfaces
- Other versions (or variants) can be requested from WAGO Sales or configured at https://configurator.wago.com/.

1-conductor female connector ▸ *MCS* MIDI Classic ▸ 231 Series

Pin spacing: 7.62 mm / 0.3 inches ▸ Actuation type: Operating tool ▸ CAGE CLAMP® ▸ Conductor entry direction to mating direction: 0 ° ▸ Color: orange

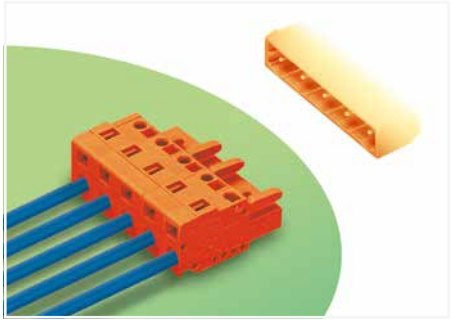

- Universal connection for all conductor types
- Easy cable pre-assembly and on-unit wiring via vertical and horizontal CAGE CLAMP® actuation
- Integrated test ports
- With coding fingers

Derating Curve
1-conductor female connector (231-202/026-000) with THT male header (231-832/001-000)
Pin spacing: 7.5 mm / Conductor cross-section: 2.5 mm² "f-st"
Based on: EN 60512-5-2 / Reduction factor: 0.8

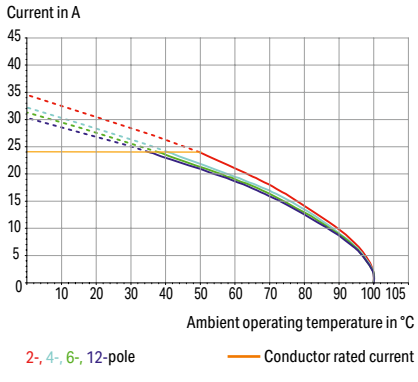

Electrical data			
Ratings per	**IEC/EN 60664-1**		
Overvoltage category	III	III	II
Pollution degree	3	2	2
Nominal voltage	500 V	630 V	1000 V
Rated impulse withstand voltage	6 kV	6 kV	6 kV
Rated current	16 A	16 A	16 A
Approvals per	**UL 1059**		
Use group	B	C	D
Rated voltage	300 V	-	300 V
Rated current	15 A	-	10 A
Approvals per	**CSA**		
Use group	B	C	D
Rated voltage	300 V	-	300 V
Rated current	15 A	-	10 A

Connection Data	
Connection technology	CAGE CLAMP®
Strip length	8 … 9 mm / 0.31 … 0.35 inches
Solid conductor	0.08 … 2.5 mm² / 28 … 12 AWG
Fine-stranded conductor	0.08 … 2.5 mm² / 28 … 12 AWG
Fine-stranded conductor; with insulated ferrule	0.25 … 1.5 mm²
Fine-stranded conductor; with uninsulated ferrule	0.25 … 2.5 mm²

Material data	
Material group	I
Insulation material (main housing)	Polyamide (PA66)
Flammability class per UL94	V0
Clamping spring material	Chrome-nickel spring steel (CrNi)
Contact material	Copper alloy
Contact Plating	Tin

Environmental requirements	
Limit temperature range	-60 … +100 °C
Processing temperature	-35 … +60 °C

Note:
The *MCS – MULTI CONNECTION SYSTEM* includes connectors without breaking capacity in accordance with DIN EN 61984. When used as intended, these connectors must not be connected/disconnected when live or under load.When used as intended, these connectors must not be connected/disconnected when live or under load. The circuit design should ensure header pins, which can be touched, are not live when unmated.

Cover	Page 816
Ferrule	Page 1081
Installation	Page 818, 1071
Insulation stop	Page 817
Marking	Page 1067
Mounting adapter	Page 820
Strain relief	Page 829
Test and measurement	Page 833, 1088
Tool	Page 812, 1072
Direct marking	Page 804
Cutout dimensions	Page 808
See technical section for further information	
Approvals and corresponding ratings, visit www.wago.com	

1-conductor female connector ▸ *MCS* MIDI Classic ▸ 231 Series

Pin spacing: 7.62 mm / 0.3 inches ▸ Actuation type: Operating tool ▸ CAGE CLAMP® ▸ Conductor entry direction to mating direction: 0 ° ▸ Color: orange

	Locking of plug-in connection: Locking lever	Mounting type: Panel mounting ▸ Mounting type: Snap-in foot







231-706/026-000

Pole number	Item No.	PU
2	231-702/026-000	100
3	231-703/026-000	100
4	231-704/026-000	50
5	231-705/026-000	50
6	231-706/026-000	50
7	231-707/026-000	50
8	231-708/026-000	25
9	231-709/026-000	25
10	231-710/026-000	25
11	231-711/026-000	25
12	231-712/026-000	25

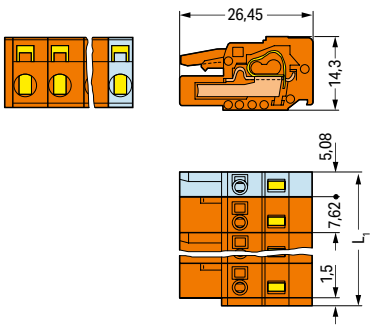

L_1 = (pole no. – 1) x pin spacing + 5.08 mm + 1.5 mm
2- to 3-pole female connectors – one latch only

231-706/037-000

Pole number	Item No.	PU
2	231-702/037-000	50
3	231-703/037-000	50
4	231-704/037-000	50
5	231-705/037-000	50
6	231-706/037-000	25
7	231-707/037-000	25
8	231-708/037-000	25
9	231-709/037-000	25
10	231-710/037-000	25
11	231-711/037-000	10
12	231-712/037-000	10

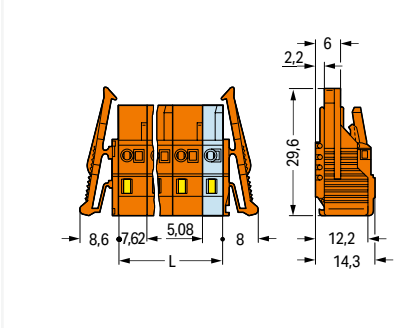

L = (pole no. – 1) x pin spacing + 5.08 mm
2- to 3-pole female connectors – one latch only

231-706/008-000

Pole number	Item No.	PU
2	231-702/008-000	100
3	231-703/008-000	100
4	231-704/008-000	50
5	231-705/008-000	50
6	231-706/008-000	50
7	231-707/008-000	50
8	231-708/008-000	25
9	231-709/008-000	25
10	231-710/008-000	25
11	231-711/008-000	25
12	231-712/008-000	25

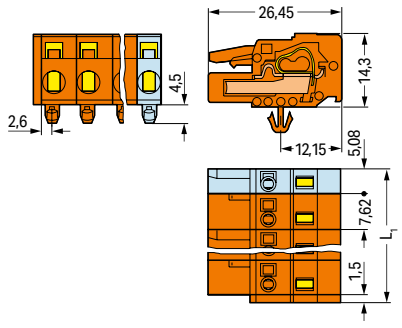

L_1 = (pole no. – 1) x pin spacing + 5.08 mm + 1.5 mm
2- to 3-pole female connectors – one latch only

PU = packaging unit; SPU = subpackaging unit; Dimensions in mm

Variants:
- Gold-plated or partially gold-plated contact surfaces
- Other versions (or variants) can be requested from WAGO Sales or configured at https://configurator.wago.com/.

1-conductor female connector ▸ *MCS* MIDI Classic ▸ 231 Series

Pin spacing: 7.62 mm / 0.3 inches ▸ Actuation type: Operating tool ▸ CAGE CLAMP® ▸ Conductor entry direction to mating direction: 0 ° ▸ Color: orange

Mounting type: Feed-through mounting; Panel mounting ▸ Mounting type: Mounting flange



231-706/031-000

Pole number	Item No.	PU
2	**231-702/031-000**	50
3	**231-703/031-000**	50
4	**231-704/031-000**	50
5	**231-705/031-000**	50
6	**231-706/031-000**	25
7	**231-707/031-000**	25
8	**231-708/031-000**	25
9	**231-709/031-000**	25
10	**231-710/031-000**	25
11	**231-711/031-000**	10
12	**231-712/031-000**	10

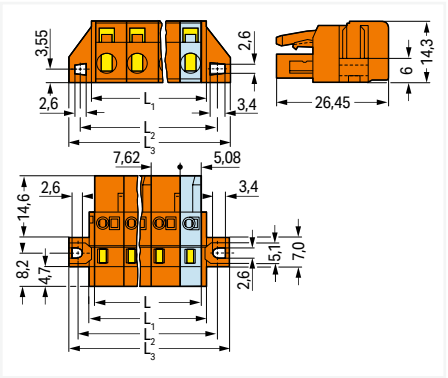

L = (pole no. – 1) x pin spacing + 5.08 mm
L_1 = L + 3 mm
L_2 = L + 8.8 mm
L_3 = L + 14.8 mm
2- to 3-pole female connectors – one latch only

Mounting type: Feed-through mounting; Panel mounting ▸ Mounting type: Mounting flange ▸ with reinforcing strips



231-706/027-000

Pole number	Item No.	PU
6	**231-706/027-000**	25
7	**231-707/027-000**	25
8	**231-708/027-000**	25
9	**231-709/027-000**	25
10	**231-710/027-000**	25
11	**231-711/027-000**	10
12	**231-712/027-000**	10

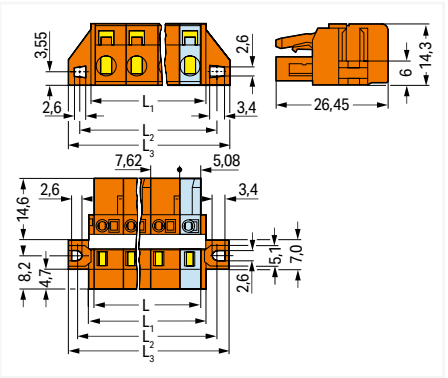

L = (pole no. – 1) x pin spacing + 5.08 mm
L_1 = L + 3 mm
L_2 = L + 8.8 mm
L_3 = L + 14.8 mm
2- to 3-pole female connectors – one latch only

PU = packaging unit; SPU = subpackaging unit; Dimensions in mm

Variants:
- Gold-plated or partially gold-plated contact surfaces
- Other versions (or variants) can be requested from WAGO Sales or configured at https://configurator.wago.com/.

1-conductor female connector, angled ▸ *MCS* MIDI Classic ▸ 732 Series

Pin spacing: 7.62 mm / 0.3 inches ▸ Actuation type: Operating tool ▸ CAGE CLAMP® ▸ Conductor entry direction to mating direction: 270 ° ▸ Color: orange

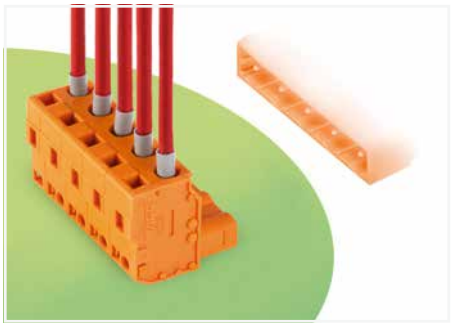

- Universal connection for all conductor types
- Easy cable pre-assembly and on-unit wiring via vertical and horizontal CAGE CLAMP® actuation
- Integrated test ports
- With coding fingers

Derating Curve
1-conductor female connector (231-202/026-000) with THT male header (231-832/001-000)
Pin spacing: 7.5 mm / Conductor cross-section: 2.5 mm² "f-st"
Based on: EN 60512-5-2 / Reduction factor: 0.8

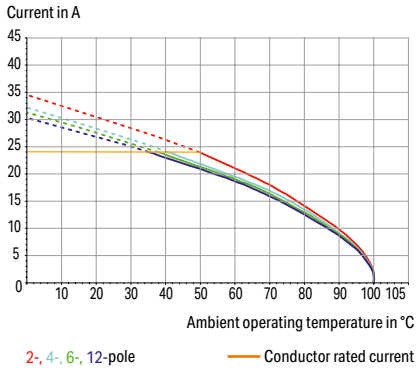

Electrical data			
Ratings per	**IEC/EN 60664-1**		
Overvoltage category	III	III	II
Pollution degree	3	2	2
Nominal voltage	500 V	630 V	1000 V
Rated impulse withstand voltage	6 kV	6 kV	6 kV
Rated current	14 A	14 A	14 A
Approvals per	**UL 1059**		
Use group	B	C	D
Rated voltage	300 V	-	300 V
Rated current	15 A	-	10 A
Approvals per	**CSA**		
Use group	B	C	D
Rated voltage	300 V	-	300 V
Rated current	15 A	-	10 A

Connection Data	
Connection technology	CAGE CLAMP®
Strip length	8 … 9 mm / 0.31 … 0.35 inches
Solid conductor	0.08 … 2.5 mm² / 28 … 12 AWG
Fine-stranded conductor	0.08 … 2.5 mm² / 28 … 12 AWG
Fine-stranded conductor; with insulated ferrule	0.25 … 1.5 mm²
Fine-stranded conductor; with uninsulated ferrule	0.25 … 2.5 mm²

Material data	
Material group	I
Insulation material (main housing)	Polyamide (PA66)
Flammability class per UL94	V0
Clamping spring material	Chrome-nickel spring steel (CrNi)
Contact material	Copper alloy
Contact Plating	Tin

Mechanical data	
Design	angled

Environmental requirements	
Limit temperature range	-60 … +85 °C
Processing temperature	-35 … +60 °C

Note:
The *MCS – MULTI CONNECTION SYSTEM* includes connectors without breaking capacity in accordance with DIN EN 61984. When used as intended, these connectors must not be connected/disconnected when live or under load.When used as intended, these connectors must not be connected/disconnected when live or under load. The circuit design should ensure header pins, which can be touched, are not live when unmated.

Ferrule	Page 1081
Insulation stop	Page 817
Marking	Page 1067
Strain relief	Page 829
Test and measurement	Page 833, 1088
Tool	Page 812
Direct marking	Page 804
See technical section for further information	
Approvals and corresponding ratings, visit www.wago.com	

1-conductor female connector, angled ▸ *MCS* MIDI Classic ▸ 732 Series

Pin spacing: 7.62 mm / 0.3 inches ▸ Actuation type: Operating tool ▸ CAGE CLAMP® ▸ Conductor entry direction to mating direction: 270 ° ▸ Color: orange



732-126/026-000

Pole number	Item No.	PU
2	**732-122/026-000**	100
3	**732-123/026-000**	100
4	**732-124/026-000**	50
5	**732-125/026-000**	50
6	**732-126/026-000**	50
7	**732-127/026-000**	50
8	**732-128/026-000**	25
9	**732-129/026-000**	25
10	**732-130/026-000**	25
11	**732-131/026-000**	25
12	**732-132/026-000**	25

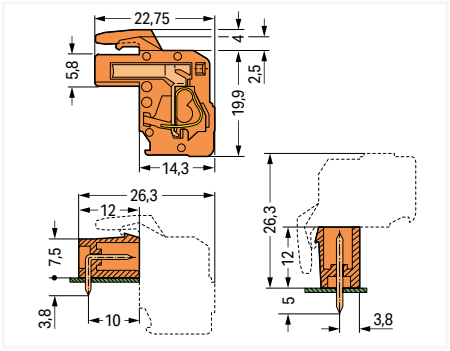

Total length = (pole no. – 1) x pin spacing + 5.08 mm + 1.5 mm + 0.9 mm

PU = packaging unit; SPU = subpackaging unit; Dimensions in mm

Variants:

- Gold-plated or partially gold-plated contact surfaces
- Other versions (or variants) can be requested from WAGO Sales or configured at https://configurator.wago.com/.

2-conductor female connector ▸ *MCS* MIDI Classic ▸ 231 Series

Pin spacing: 7.62 mm / 0.3 inches ▸ Actuation type: Operating tool ▸ Push-in CAGE CLAMP® ▸ Conductor entry direction to mating direction: 0 ° ▸ Color: orange

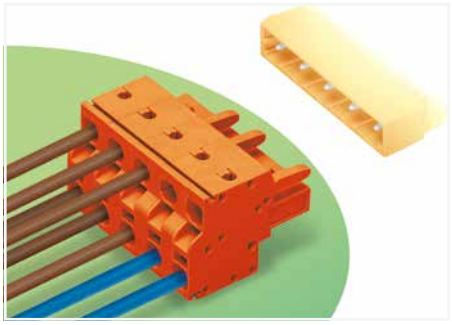

- Universal connection for all conductor types
- Two conductor entries per pole
- For looping through power or data buses
- Bus connection is retained, even when unmated
- Push-in termination of solid and ferruled conductors
- With coding fingers

Derating Curve
2-conductor female connector (231-2202/026-000) with THT male header (231-262/001-000)
Pin spacing: 7.5 mm / Conductor cross-section: 2.5 mm² "f-st"
Based on: EN 60512-5-2 / Reduction factor: 0.8

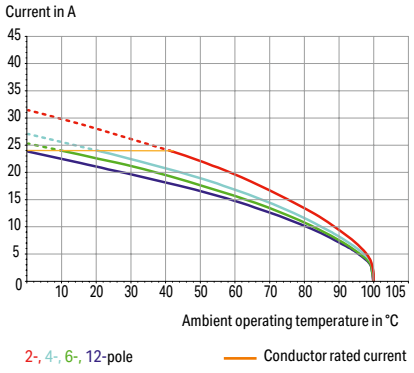

Electrical data			
Ratings per	**IEC/EN 60664-1**		
Overvoltage category	III	III	II
Pollution degree	3	2	2
Nominal voltage	500 V	630 V	1000 V
Rated impulse withstand voltage	6 kV	6 kV	6 kV
Rated current	16 A	16 A	16 A
Approvals per	**UL 1059**		
Use group	B	C	D
Rated voltage	300 V	-	300 V
Rated current	20 A	-	10 A
Approvals per	**CSA**		
Use group	B	C	D
Rated voltage	300 V	-	300 V
Rated current	15 A	-	10 A

Connection Data	
Connection technology	Push-in CAGE CLAMP®
Strip length	9 … 10 mm / 0.35 … 0.39 inches
Solid conductor	0.2 … 2.5 mm² / 24 … 12 AWG
Fine-stranded conductor	0.2 … 2.5 mm² / 24 … 12 AWG
Fine-stranded conductor; with insulated ferrule	0.25 … 1.5 mm²
Fine-stranded conductor; with uninsulated ferrule	0.25 … 2.5 mm²

Material data	
Material group	I
Insulation material (main housing)	Polyamide (PA66)
Flammability class per UL94	V0
Clamping spring material	Chrome-nickel spring steel (CrNi)
Contact material	Copper alloy
Contact Plating	Tin

Environmental requirements	
Limit temperature range	-60 … +100 °C
Processing temperature	-35 … +60 °C

Note:
The *MCS – MULTI CONNECTION SYSTEM* includes connectors without breaking capacity in accordance with DIN EN 61984. When used as intended, these connectors must not be connected/disconnected when live or under load.When used as intended, these connectors must not be connected/disconnected when live or under load. The circuit design should ensure header pins, which can be touched, are not live when unmated.

Ferrule	Page 1081
Insulation stop	Page 817
Marking	Page 1067
Strain relief	Page 826
Test and measurement	Page 833
Direct marking	Page 804

See technical section for further information

Approvals and corresponding ratings, visit www.wago.com

2-conductor female connector ▸ *MCS* MIDI Classic ▸ 231 Series

Pin spacing: 7.62 mm / 0.3 inches ▸ Actuation type: Operating tool ▸ Push-in CAGE CLAMP® ▸ Conductor entry direction to mating direction: 0 ° ▸ Color: orange

Plugging without loss of pin spacing

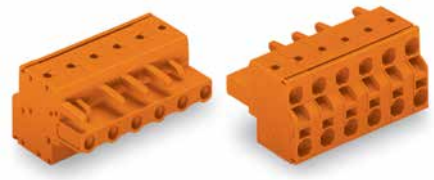

231-2706/026-000

Pole number	Item No.	PU
2	231-2702/026-000	100
3	231-2703/026-000	100
4	231-2704/026-000	50
5	231-2705/026-000	50
6	231-2706/026-000	50
7	231-2707/026-000	50
8	231-2708/026-000	25
9	231-2709/026-000	25
10	231-2710/026-000	25
11	231-2711/026-000	25
12	231-2712/026-000	25

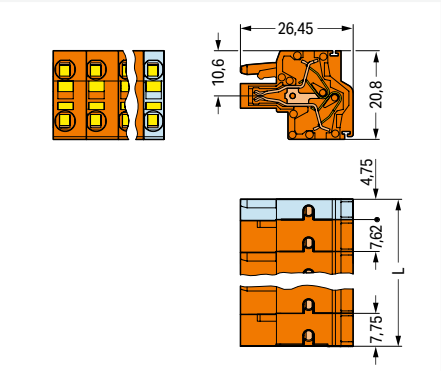

L = (pole no. – 2) x pin spacing + 12.5 mm
2- to 3-pole female connectors – one latch only

Locking of plug-in connection: Locking lever

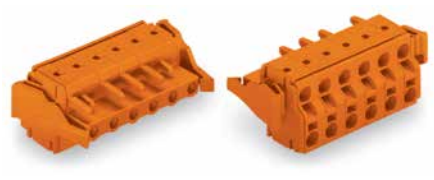

231-2706/037-000

Pole number	Item No.	PU
2	231-2702/037-000	50
3	231-2703/037-000	50
4	231-2704/037-000	50
5	231-2705/037-000	50
6	231-2706/037-000	25
7	231-2707/037-000	25
8	231-2708/037-000	25
9	231-2709/037-000	25
10	231-2710/037-000	25
11	231-2711/037-000	10
12	231-2712/037-000	10

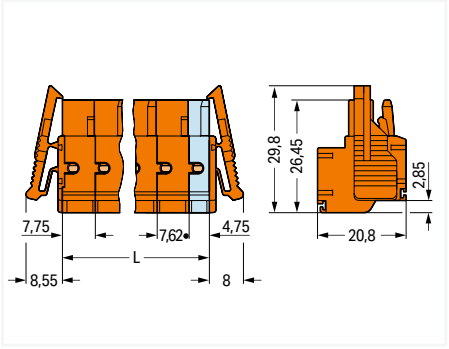

L = (pole no. – 2) x pin spacing + 12.5 mm
2- to 3-pole female connectors – one latch only

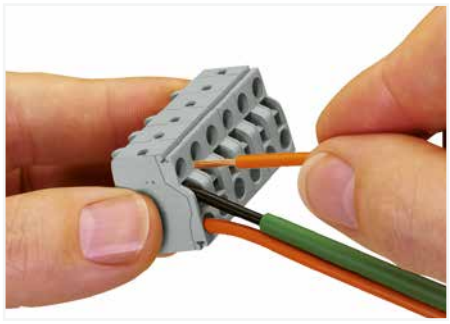

Operating Push-in CAGE CLAMP® is easy, fast and identical to that of CAGE CLAMP®. The screwdriver is fully inserted into the operating slot, holding Push-in CAGE CLAMP® open. After the conductor has been inserted into the clamping unit and the screwdriver been withdrawn, the conductor is clamped safely. Solid and fine-stranded conductors < 0.5 mm² (20 AWG) are terminated and removed using a screwdriver.

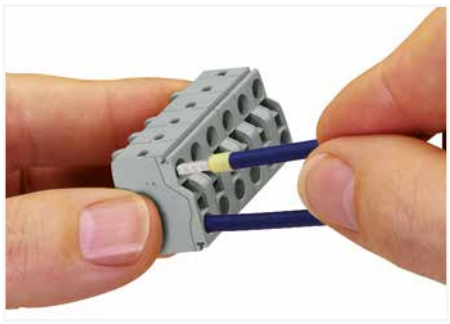

Solid conductors ≥ 0.5 mm² (20 AWG), as well as ferruled, fine-stranded conductors can be terminated by simply pushing them into unit. Integrated test ports allow touch contact with current bar via test probes in both horizontal and vertical directions.

9

PU = packaging unit; SPU = subpackaging unit; Dimensions in mm

Variants:

- Gold-plated or partially gold-plated contact surfaces
- Other versions (or variants) can be requested from WAGO Sales or configured at https://configurator.wago.com/.

1-conductor female connector ▸ *MCS* MIDI Classic ▸ 2231 Series

Pin spacing: 7.62 mm / 0.3 inches ▸ Actuation type: Push-button ▸ Push-in CAGE CLAMP® ▸ Conductor entry direction to mating direction: 0 ° ▸ Color: orange

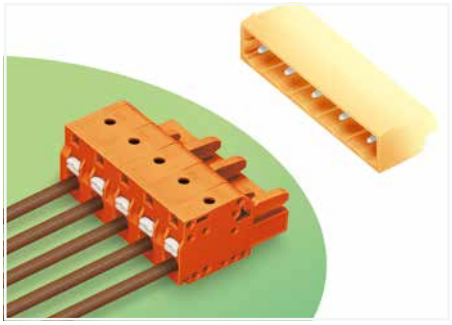

- Universal connection for all conductor types
- Easy-to-use design does not require specialty tools
- Ability to wire while mated
- Push-in termination of solid and ferruled conductors
- Integrated test ports for testing parallel to the conductor entry
- Coding option available

Derating Curve
1-conductor female connector (2231-202/026-000) with THT male header (231-262/001-000)
Pin spacing: 7.5 mm / Conductor cross-section: 2.5 mm² "f-st"
Based on: EN 60512-5-2 / Reduction factor: 0.8

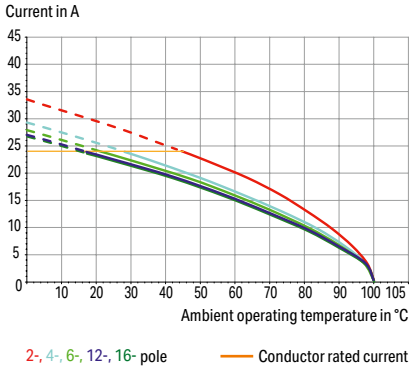

Electrical data			
Ratings per	**IEC/EN 60664-1**		
Overvoltage category	III	III	II
Pollution degree	3	2	2
Nominal voltage	500 V	630 V	1000 V
Rated impulse withstand voltage	6 kV	6 kV	6 kV
Rated current	16 A	16 A	16 A
Approvals per	**UL 1059**		
Use group	B	C	D
Rated voltage		300 V	
Rated current	15 A	15 A	10 A
Approvals per	**CSA**		
Use group	B	C	D
Rated voltage		300 V	
Rated current	15 A	15 A	10 A

Connection Data	
Connection technology	Push-in CAGE CLAMP®
Strip length	10 … 11 mm / 0.39 … 0.43 inches
Solid conductor	0.2 … 2.5 mm² / 24 … 12 AWG
Fine-stranded conductor	0.2 … 2.5 mm² / 24 … 12 AWG
Fine-stranded conductor; with insulated ferrule	0.25 … 1.5 mm²
Fine-stranded conductor; with uninsulated ferrule	0.25 … 2.5 mm²

Material data	
Material group	I
Insulation material (main housing)	Polyamide (PA66)
Flammability class per UL94	V0
Clamping spring material	Chrome-nickel spring steel (CrNi)
Contact material	Copper alloy
Contact Plating	Tin

Environmental requirements	
Limit temperature range	-60 … +100 °C
Processing temperature	-35 … +60 °C

Note:
The *MCS – MULTI CONNECTION SYSTEM* includes connectors without breaking capacity in accordance with DIN EN 61984. When used as intended, these connectors must not be connected/disconnected when live or under load.When used as intended, these connectors must not be connected/disconnected when live or under load. The circuit design should ensure header pins, which can be touched, are not live when unmated.

Ferrule	Page 1081
Installation	Page 819
Insulation stop	Page 817
Marking	Page 1067
Strain relief	Page 826
Test and measurement	Page 833, 1088
Tool	Page 1072
Direct marking	Page 804
Cutout dimensions	Page 808
See technical section for further information	
Approvals and corresponding ratings, visit www.wago.com	

1-conductor female connector ▸ *MCS* MIDI Classic ▸ 2231 Series

Pin spacing: 7.62 mm / 0.3 inches ▸ Actuation type: Push-button ▸ Push-in CAGE CLAMP® ▸ Conductor entry direction to mating direction: 0 ° ▸ Color: orange

	Locking of plug-in connection: Locking lever	Mounting type: Panel mounting ▸ Mounting type: Snap-in foot



2231-706/026-000

Pole number	Item No.	PU
2	2231-702/026-000	100
3	2231-703/026-000	100
4	2231-704/026-000	50
5	2231-705/026-000	50
6	2231-706/026-000	50
7	2231-707/026-000	50
8	2231-708/026-000	25
9	2231-709/026-000	25
10	2231-710/026-000	25
11	2231-711/026-000	25
12	2231-712/026-000	25

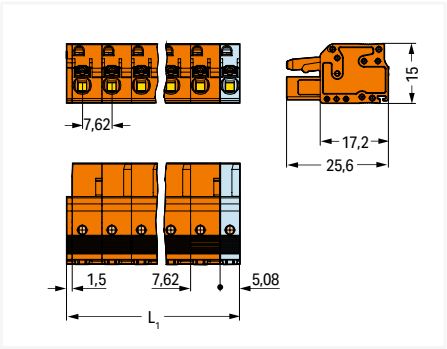

L_1 = (pole no. – 1) x pin spacing + 5.08 mm + 1.5 mm
2- to 3-pole female connectors – one latch only



2231-706/037-000

Pole number	Item No.	PU
2	2231-702/037-000	50
3	2231-703/037-000	50
4	2231-704/037-000	50
5	2231-705/037-000	50
6	2231-706/037-000	25
7	2231-707/037-000	25
8	2231-708/037-000	25
9	2231-709/037-000	25
10	2231-710/037-000	25
11	2231-711/037-000	10
12	2231-712/037-000	10

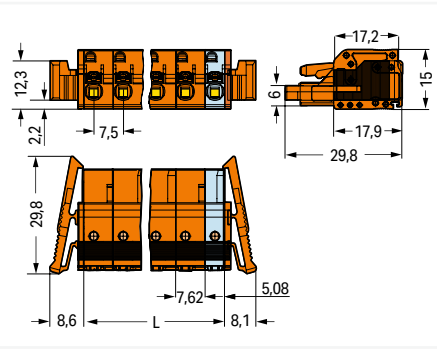

L = (pole no. – 1) x pin spacing + 5.08 mm
2- to 3-pole female connectors – one latch only



2231-706/008-000

Pole number	Item No.	PU
2	2231-702/008-000	100
3	2231-703/008-000	100
4	2231-704/008-000	50
5	2231-705/008-000	50
6	2231-706/008-000	50
7	2231-707/008-000	50
8	2231-708/008-000	25
9	2231-709/008-000	25
10	2231-710/008-000	25
11	2231-711/008-000	25
12	2231-712/008-000	25

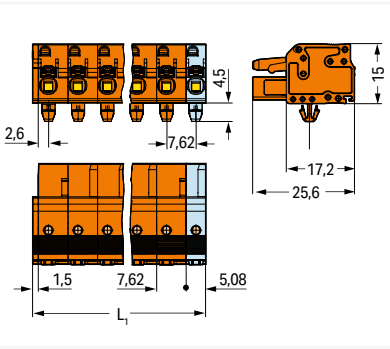

L_1 = (pole no. – 1) x pin spacing + 5.08 mm + 1.5 mm
2- to 3-pole female connectors – one latch only

PU = packaging unit; SPU = subpackaging unit; Dimensions in mm

Variants:

- Gold-plated or partially gold-plated contact surfaces
- Other versions (or variants) can be requested from WAGO Sales or configured at https://configurator.wago.com/.

1-conductor female connector ▸ *MCS* MIDI Classic ▸ 2231 Series

Pin spacing: 7.62 mm / 0.3 inches ▸ Actuation type: Push-button ▸ Push-in CAGE CLAMP® ▸ Conductor entry direction to mating direction: 0 ° ▸ Color: orange

Mounting type: Feed-through mounting; Panel mounting ▸ Mounting type: Mounting flange



2231-706/031-000

Pole number	Item No.	PU
2	**2231-702/031-000**	50
3	**2231-703/031-000**	50
4	**2231-704/031-000**	50
5	**2231-705/031-000**	50
6	**2231-706/031-000**	25
7	**2231-707/031-000**	25
8	**2231-708/031-000**	25
9	**2231-709/031-000**	25
10	**2231-710/031-000**	25
11	**2231-711/031-000**	10
12	**2231-712/031-000**	10

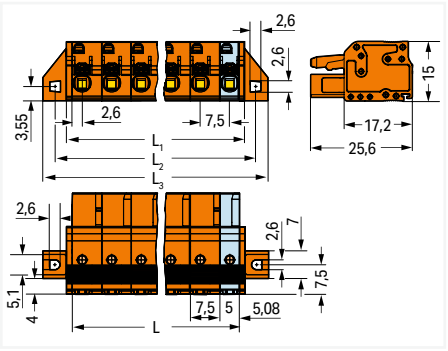

L = (pole no. – 1) x pin spacing + 5.08 mm
L_1 = L + 2.8 mm
L_2 = L + 8.8 mm
L_3 = L + 14.8 mm
2- to 3-pole female connectors – one latch only

PU = packaging unit; SPU = subpackaging unit; Dimensions in mm

Variants:
- Gold-plated or partially gold-plated contact surfaces
- Other versions (or variants) can be requested from WAGO Sales or configured at https://configurator.wago.com/.

1-conductor male connector ▸ *MCS* MIDI Classic ▸ 731 Series

Pin spacing: 7.62 mm / 0.3 inches ▸ Actuation type: Operating tool ▸ CAGE CLAMP® ▸ Conductor entry direction to mating direction: 0 ° ▸ Color: orange

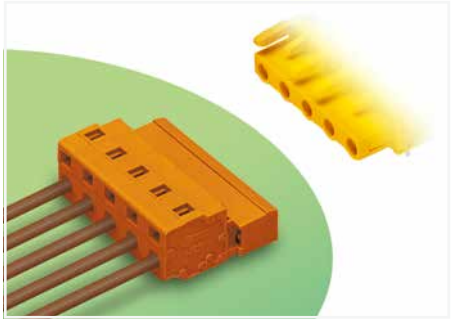

- Universal connection for all conductor types
- Easy cable pre-assembly and on-unit wiring via vertical and horizontal CAGE CLAMP® actuation
- For wire-to-wire and board-to-wire connections
- Versions available with snap-in mounting feet or flanges for panel or through-panel mounting
- With coding fingers

Derating Curve
1-conductor female connector (231-202/026-000) with
1-conductor male connector (731-602)
Pin spacing: 7.5 mm / Conductor cross-section: 2.5 mm² "f-st"
Based on: EN 60512-5-2 / Reduction factor: 0.8

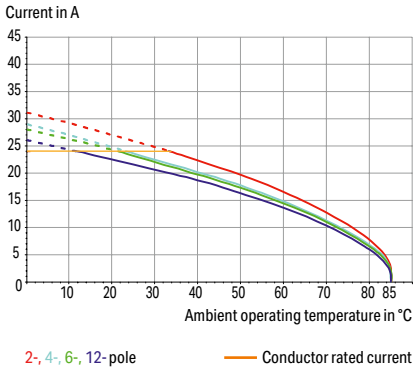

Electrical data			
Ratings per	**IEC/EN 60664-1**		
Overvoltage category	III	III	II
Pollution degree	3	2	2
Nominal voltage	500 V	630 V	1000 V
Rated impulse withstand voltage	6 kV	6 kV	6 kV
Rated current	12 A	12 A	12 A
Approvals per	**UL 1059**		
Use group	B	C	D
Rated voltage	300 V	-	300 V
Rated current	15 A	-	10 A
Approvals per	**CSA**		
Use group	B	C	D
Rated voltage	300 V	-	300 V
Rated current	15 A	-	10 A

Connection Data	
Connection technology	CAGE CLAMP®
Strip length	8 … 9 mm / 0.31 … 0.35 inches
Solid conductor	0.08 … 2.5 mm² / 28 … 12 AWG
Fine-stranded conductor	0.08 … 2.5 mm² / 28 … 12 AWG
Fine-stranded conductor; with insulated ferrule	0.25 … 1.5 mm²
Fine-stranded conductor; with uninsulated ferrule	0.25 … 2.5 mm²

Material data	
Material group	I
Insulation material (main housing)	Polyamide (PA66)
Flammability class per UL94	V0
Clamping spring material	Chrome-nickel spring steel (CrNi)
Contact material	Electrolytic copper (E_{Cu})
Contact Plating	Tin

Environmental requirements	
Limit temperature range	-60 … +100 °C
Processing temperature	-35 … +60 °C

Note:
The *MCS – MULTI CONNECTION SYSTEM* includes connectors without breaking capacity in accordance with DIN EN 61984. When used as intended, these connectors must not be connected/disconnected when live or under load.When used as intended, these connectors must not be connected/disconnected when live or under load. The circuit design should ensure header pins, which can be touched, are not live when unmated.

Coding	Page 814
Cover	Page 816
Ferrule	Page 1081
Installation	Page 818, 1071
Insulation stop	Page 817
Marking	Page 1067
Mounting adapter	Page 820
Strain relief	Page 829
Tool	Page 812, 1072
Direct marking	Page 804
See technical section for further information	
Approvals and corresponding ratings, visit www.wago.com	

1-conductor male connector ▸ *MCS* MIDI Classic ▸ 731 Series

Pin spacing: 7.62 mm / 0.3 inches ▸ Actuation type: Operating tool ▸ CAGE CLAMP® ▸ Conductor entry direction to mating direction: 0 ° ▸ Color: orange

	Mounting type: Panel mounting ▸ Mounting type: Snap-in foot	Mounting type: Feed-through mounting; Panel mounting ▸ Mounting type: Mounting flange
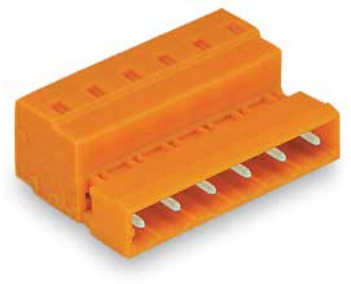	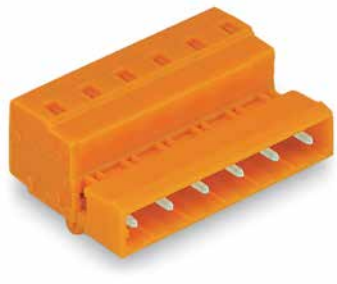	

731-636

Pole number	Item No.	PU
2	731-632	100
3	731-633	100
4	731-634	50
5	731-635	50
6	731-636	50
7	731-637	50
8	731-638	25
9	731-639	25
10	731-640	25
11	731-641	25
12	731-642	25

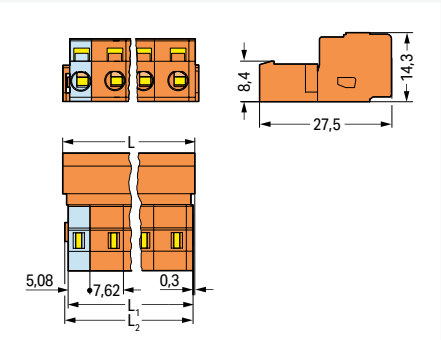

L = (pole no. – 1) x pin spacing + 8.2 mm
L_1 = L – 1.7 mm
L_2 = L – 1.2 mm

731-636/018-000

Pole number	Item No.	PU
2	731-632/018-000	100
3	731-633/018-000	100
4	731-634/018-000	50
5	731-635/018-000	50
6	731-636/018-000	50
7	731-637/018-000	50
8	731-638/018-000	25
9	731-639/018-000	25
10	731-640/018-000	25
11	731-641/018-000	25
12	731-642/018-000	25

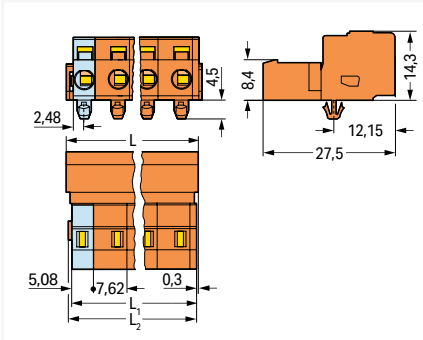

L = (pole no. – 1) x pin spacing + 8.2 mm
L_1 = L – 1.7 mm
L_2 = L – 1.2 mm

731-636/019-000

Pole number	Item No.	PU
2	731-632/019-000	50
3	731-633/019-000	50
4	731-634/019-000	50
5	731-635/019-000	50
6	731-636/019-000	25
7	731-637/019-000	25
8	731-638/019-000	25
9	731-639/019-000	25
10	731-640/019-000	25
11	731-641/019-000	10
12	731-642/019-000	10

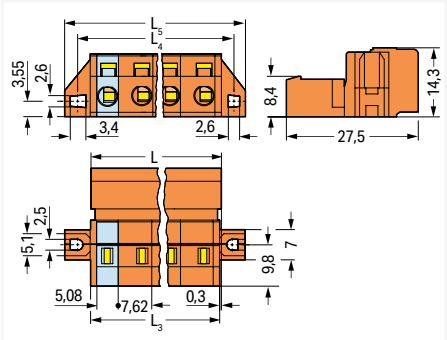

L = (pole no. – 1) x pin spacing + 8.2 mm
L_3 = L – 0.2 mm
L_4 = L_3 + 5.8 mm
L_5 = L_3 + 11.8 mm

PU = packaging unit; SPU = subpackaging unit; Dimensions in mm

Variants:
- Other pole numbers
- Gold-plated or partially gold-plated contact surfaces
- Other versions (or variants) can be requested from WAGO Sales or configured at https://configurator.wago.com/.

1-conductor male connector ▸ *MCS* MIDI Classic ▸ 731 Series

Pin spacing: 7.62 mm / 0.3 inches ▸ Actuation type: Operating tool ▸ CAGE CLAMP® ▸ Conductor entry direction to mating direction: 0 ° ▸ Color: orange

Mounting type: Feed-through mounting ▸ Mounting type: Snap-in flange



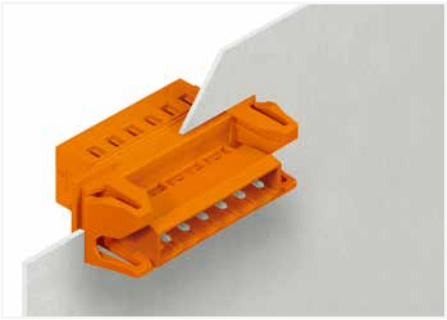

731-636/114-000

Male connector, with snap-in flanges, for feedthrough applications, for 0.5 … 2.5 mm plate thickness

Pole number	Item No.	PU
2	**731-632/114-000**	50
3	**731-633/114-000**	50
4	**731-634/114-000**	50
5	**731-635/114-000**	25
6	**731-636/114-000**	25
7	**731-637/114-000**	25
8	**731-638/114-000**	25
9	**731-639/114-000**	25
10	**731-640/114-000**	10
11	**731-641/114-000**	10
12	**731-642/114-000**	10

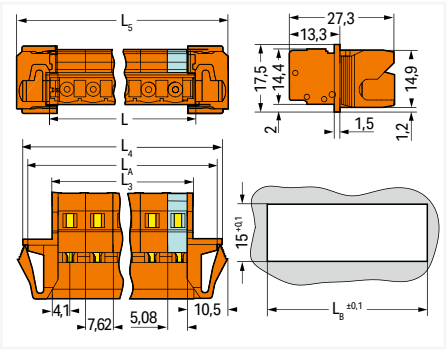

L = (pole no. – 1) x pin spacing + 8.2 mm
L_3 = L – 0.2 mm
L_4 = L_3 + 15.2 mm
L_5 = L_3 + 18 mm
L_A = L_3 + 12.6 mm
L_B = L_3 + 13.2 mm

PU = packaging unit; SPU = subpackaging unit; Dimensions in mm

Variants:
- Other pole numbers
- Gold-plated or partially gold-plated contact surfaces
- Other versions (or variants) can be requested from WAGO Sales or configured at https://configurator.wago.com/.

THT female header ▸ *MCS* MIDI Classic ▸ 232 Series

Pin spacing: 7.62 mm / 0.3 inches ▸ Solder pin dimensions: 0.6 x 1 mm ▸ Solder pin length: 5 mm ▸ Color: orange

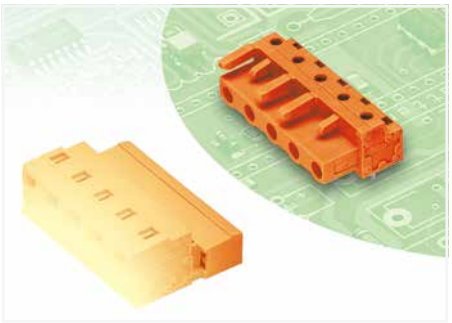

- Horizontal or vertical PCB mounting via straight or angled solder pins
- For board-to-board and board-to-wire connections
- Touch-proof PCB outputs
- Easy-to-identify PCB inputs and outputs
- With coding fingers

Derating Curve
THT female header (232-832) with
1-conductor male connector (731-602)
Pin spacing: 7.5 mm / Conductor cross-section: 2.5 mm² "f-st"
Based on: EN 60512-5-2 / Reduction factor: 0.8

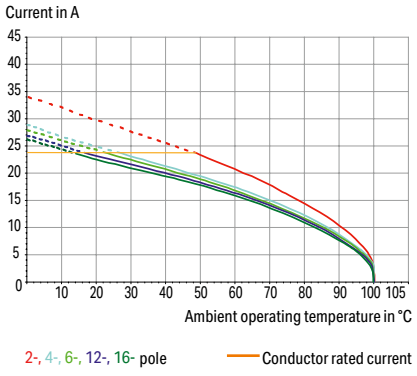

Electrical data			
Ratings per	**IEC/EN 60664-1**		
Overvoltage category	III	III	II
Pollution degree	3	2	2
Nominal voltage	500 V	630 V	1000 V
Rated impulse withstand voltage	6 kV	6 kV	6 kV
Rated current	12 A	12 A	12 A
Approvals per	**UL 1059**		
Use group	B	C	D
Rated voltage	300 V	-	300 V
Rated current	15 A	-	10 A
Approvals per	**CSA**		
Use group	B	C	D
Rated voltage	300 V	-	300 V
Rated current	15 A	-	10 A

Material data	
Material group	I
Insulation material (main housing)	Polyamide (PA66)
Flammability class per UL94	V0
Contact material	Copper alloy
Contact Plating	Tin

Mechanical data	
Solder pin arrangement	over the entire female connector (in-line)
Number of solder pins per potential	1
Solder pin length	5 mm
Solder pin dimensions	0.6 x 1 mm
Drilled hole diameter	1.3 $^{(+0.1)}$ mm

Environmental requirements	
Limit temperature range	-60 … +100 °C
Processing temperature	-35 … +60 °C

Note:
The *MCS – MULTI CONNECTION SYSTEM* includes connectors without breaking capacity in accordance with DIN EN 61984. When used as intended, these connectors must not be connected/disconnected when live or under load.When used as intended, these connectors must not be connected/disconnected when live or under load. The circuit design should ensure header pins, which can be touched, are not live when unmated.

Installation	Page 818, 1071
Test and measurement	Page 833, 1088
Cutout dimensions	Page 808
See technical section for further information	
Approvals and corresponding ratings, visit www.wago.com	

THT female header ▸ *MCS* MIDI Classic ▸ 232 Series

Pin spacing: 7.62 mm / 0.3 inches ▸ Solder pin dimensions: 0.6 x 1 mm ▸ Solder pin length: 5 mm ▸ Color: orange

Mating direction to the PCB: 0 °

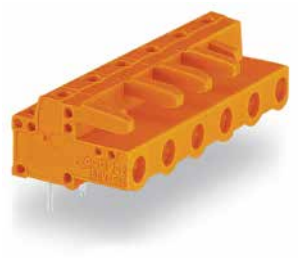

232-866

Pole number	Item No.	PU
2	232-862	100
3	232-863	100
4	232-864	50
5	232-865	50
6	232-866	50
7	232-867	50
8	232-868	25
9	232-869	25
10	232-870	25
11	232-871	25
12	232-872	25

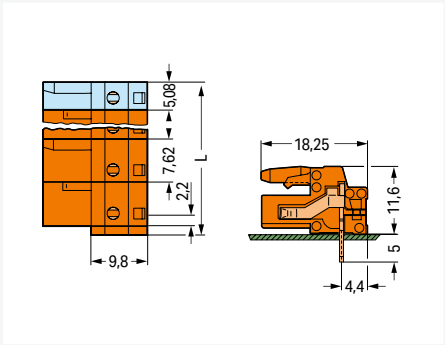

L = (pole no. – 1) x pin spacing + 5.08 mm + 1.5 mm
Distance to first solder pin: 2.2 mm
2- to 3-pole female connectors – one latch only

Mating direction to the PCB: 90 °

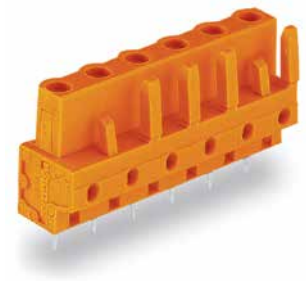

232-766

Pole number	Item No.	PU
2	232-762	100
3	232-763	100
4	232-764	50
5	232-765	50
6	232-766	50
7	232-767	50
8	232-768	25
9	232-769	25
10	232-770	25
11	232-771	25
12	232-772	25

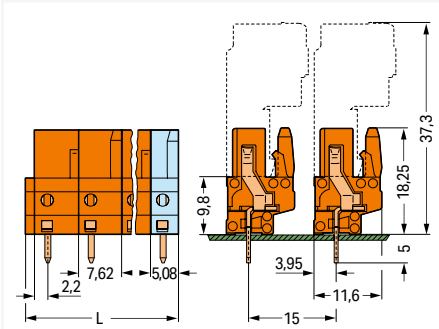

L = (pole no. – 1) x pin spacing + 5.08 mm + 1.5 mm
2- to 3-pole female connectors – one latch only

Locking of plug-in connection: Locking lever ▸ Mating direction to the PCB: 0 °



232-866/039-000

Pole number	Item No.	PU
2	232-862/039-000	50
3	232-863/039-000	50
4	232-864/039-000	50
5	232-865/039-000	50
6	232-866/039-000	25
7	232-867/039-000	25
8	232-868/039-000	25
9	232-869/039-000	25
10	232-870/039-000	25
11	232-871/039-000	10
12	232-872/039-000	10

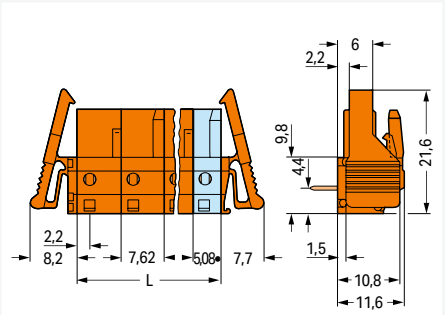

L = (pole no. – 1) x pin spacing + 5.08 mm
Distance to first solder pin: 2.2 mm
2- to 3-pole female connectors – one latch only

PU = packaging unit; SPU = subpackaging unit; Dimensions in mm

Variants:

- Other pole numbers
- 3.8 mm pin projection for male headers with straight solder pins
- Gold-plated or partially gold-plated contact surfaces
- Other versions (or variants) can be requested from WAGO Sales or configured at https://configurator.wago.com/.

THT female header ▸ *MCS* MIDI Classic ▸ 232 Series

Pin spacing: 7.62 mm / 0.3 inches ▸ Solder pin dimensions: 0.6 x 1 mm ▸ Solder pin length: 5 mm ▸ Color: orange

Locking of plug-in connection: Locking lever ▸ Mating direction to the PCB: 90 °



232-766/039-000

Pole number	Item No.	PU
2	232-762/039-000	50
3	232-763/039-000	50
4	232-764/039-000	50
5	232-765/039-000	50
6	232-766/039-000	25
7	232-767/039-000	25
8	232-768/039-000	25
9	232-769/039-000	25
10	232-770/039-000	25
11	232-771/039-000	10
12	232-772/039-000	10

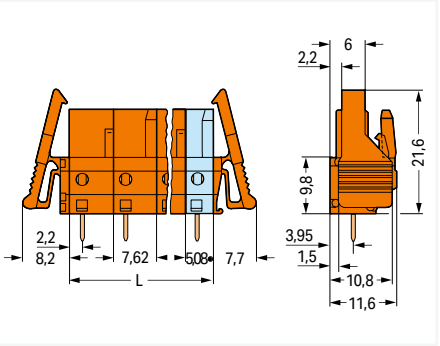

L = (pole no. – 1) x pin spacing + 5.08 mm
2- to 3-pole female connectors – one latch only

Mounting type: Feed-through mounting; Panel mounting ▸ Mounting type: Mounting flange ▸ Mating direction to the PCB: 0 °



232-866/031-000

Pole number	Item No.	PU
2	232-862/031-000	50
3	232-863/031-000	50
4	232-864/031-000	50
5	232-865/031-000	50
6	232-866/031-000	25
7	232-867/031-000	25
8	232-868/031-000	25
9	232-869/031-000	25
10	232-870/031-000	25
11	232-871/031-000	10
12	232-872/031-000	10

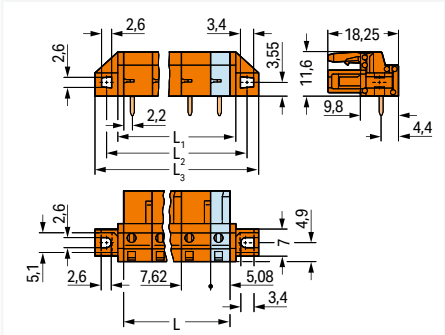

L = (pole no. – 1) x pin spacing + 5.08 mm
L_1 = L + 3 mm
L_2 = L + 8.8 mm
L_3 = L + 14.8 mm
2- to 3-pole female connectors – one latch only

Mounting type: Feed-through mounting; Panel mounting ▸ Mounting type: Mounting flange ▸ Mating direction to the PCB: 90 °

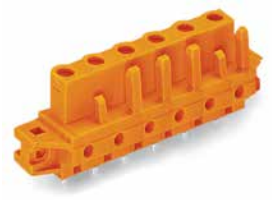

232-766/031-000

Pole number	Item No.	PU
2	232-762/031-000	50
3	232-763/031-000	50
4	232-764/031-000	50
5	232-765/031-000	50
6	232-766/031-000	25
7	232-767/031-000	25
8	232-768/031-000	25
9	232-769/031-000	25
10	232-770/031-000	25
11	232-771/031-000	10
12	232-772/031-000	10

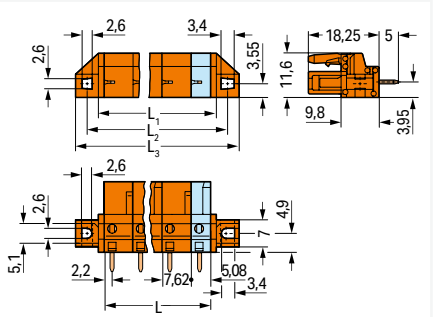

L = (pole no. – 1) x pin spacing + 5.08 mm
L_1 = L + 3 mm
L_2 = L + 8.8 mm
L_3 = L + 14.8 mm
2- to 3-pole female connectors – one latch only

PU = packaging unit; SPU = subpackaging unit; Dimensions in mm

Variants:
- Other pole numbers
- 3.8 mm pin projection for male headers with straight solder pins
- Gold-plated or partially gold-plated contact surfaces
- Other versions (or variants) can be requested from WAGO Sales or configured at https://configurator.wago.com/.

THT female header ▸ *MCS* MIDI Classic ▸ 232 Series

Pin spacing: 7.62 mm / 0.3 inches ▸ Solder pin dimensions: 0.6 x 1 mm ▸ Solder pin length: 5 mm ▸ Color: orange

Mounting type: Flush feed-through mounting; Panel mounting ▸ Mounting type: Mounting flange ▸ Mating direction to the PCB: 0 °



232-866/047-000

Pole number	Item No.	PU
2	232-862/047-000	50
3	232-863/047-000	50
4	232-864/047-000	50
5	232-865/047-000	50
6	232-866/047-000	25
7	232-867/047-000	25
8	232-868/047-000	25
9	232-869/047-000	25
10	232-870/047-000	25
11	232-871/047-000	10
12	232-872/047-000	10

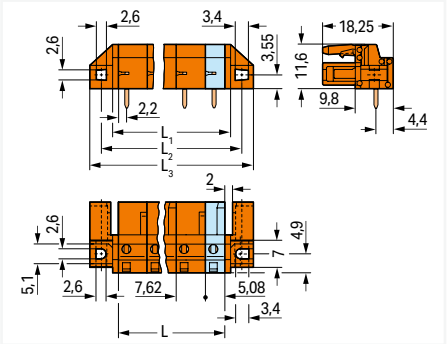

L = (pole no. – 1) x pin spacing + 5.08 mm
L_1 = L + 3 mm
L_2 = L + 8.8 mm
L_3 = L + 14.8 mm
2- to 3-pole female connectors – one latch only

Mounting type: Flush feed-through mounting; Panel mounting ▸ Mounting type: Mounting flange ▸ Mating direction to the PCB: 90 °



232-766/047-000

Pole number	Item No.	PU
2	232-762/047-000	50
3	232-763/047-000	50
4	232-764/047-000	50
5	232-765/047-000	50
6	232-766/047-000	25
7	232-767/047-000	25
8	232-768/047-000	25
9	232-769/047-000	25
10	232-770/047-000	25
11	232-771/047-000	10
12	232-772/047-000	10

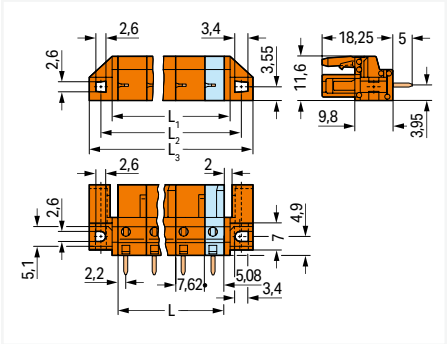

L = (pole no. – 1) x pin spacing + 5.08 mm
L_1 = L + 3 mm
L_2 = L + 8.8 mm
L_3 = L + 14.8 mm
2- to 3-pole female connectors – one latch only

PU = packaging unit; SPU = subpackaging unit; Dimensions in mm

Variants:
- Other pole numbers
- 3.8 mm pin projection for male headers with straight solder pins
- Gold-plated or partially gold-plated contact surfaces
- Other versions (or variants) can be requested from WAGO Sales or configured at https://configurator.wago.com/.

THT male header ▸ *MCS* MIDI Classic ▸ 231 Series

Pin spacing: 7.62 mm / 0.3 inches ▸ Solder pin dimensions: 1 x 1 mm ▸ Color: orange

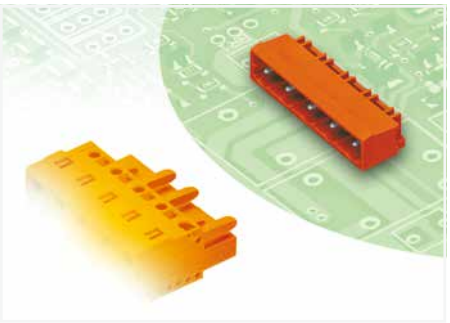

- Horizontal or vertical PCB mounting via straight or angled solder pins
- Pin cross-section: 1 x 1 mm
- With coding fingers

Derating Curve
1-conductor female connector (231-202/026-000) with
THT male header (231-862/001-000)
Pin spacing: 7.5 mm / Conductor cross-section: 2.5 mm² "f-st"
Based on: EN 60512-5-2 / Reduction factor: 0.8

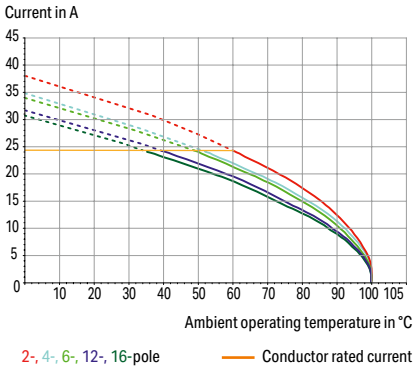

Electrical data			
Ratings per	**IEC/EN 60664-1**		
Overvoltage category	III	III	II
Pollution degree	3	2	2
Nominal voltage	500 V	630 V	1000 V
Rated impulse withstand voltage	6 kV	6 kV	6 kV
Rated current	12 A	12 A	12 A
Approvals per	**UL 1059**		
Use group	B	C	D
Rated voltage	300 V	-	300 V
Rated current	10 A	-	10 A
Approvals per	**CSA**		
Use group	B	C	D
Rated voltage	300 V	-	300 V
Rated current	10 A	-	10 A

Material data	
Material group	I
Insulation material (main housing)	Polyamide (PA66)
Flammability class per UL94	V0
Contact material	Electrolytic copper (E_{Cu})
Contact Plating	Tin

Mechanical data	
Solder pin arrangement	over the entire male connector (in-line)
Number of solder pins per potential	1
Solder pin dimensions	1 x 1 mm
Drilled hole diameter	1.4 $^{(+0.1)}$ mm

Environmental requirements	
Limit temperature range	-60 … +100 °C
Processing temperature	-35 … +60 °C

Note:
The *MCS – MULTI CONNECTION SYSTEM* includes connectors without breaking capacity in accordance with DIN EN 61984. When used as intended, these connectors must not be connected/disconnected when live or under load.When used as intended, these connectors must not be connected/disconnected when live or under load. The circuit design should ensure header pins, which can be touched, are not live when unmated.

Coding Page 814
Installation Page 818
See technical section for further information
Approvals and corresponding ratings, visit www.wago.com

THT male header ▸ *MCS* MIDI Classic ▸ 231 Series

Pin spacing: 7.62 mm / 0.3 inches ▸ Solder pin dimensions: 1 x 1 mm ▸ Color: orange

Mating direction to the PCB: 0 ° ▸ Solder pin length: 3.8 mm

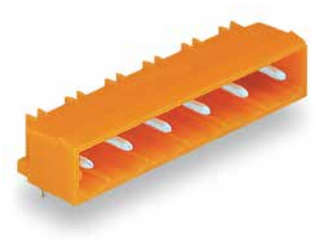

231-936/001-000

Pole number	Item No.	PU
2	231-932/001-000	100
3	231-933/001-000	200
4	231-934/001-000	100
5	231-935/001-000	100
6	231-936/001-000	50
7	231-937/001-000	50
8	231-938/001-000	50
9	231-939/001-000	50
10	231-940/001-000	50
11	231-941/001-000	50
12	231-942/001-000	50

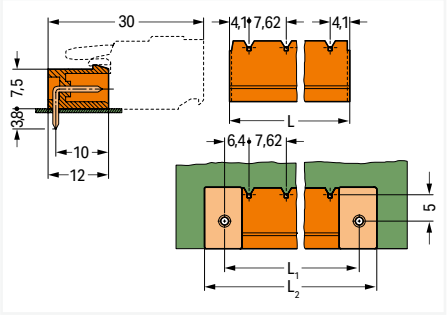

L = (pole no. – 1) x pin spacing + 8.2 mm
L_1 = L + 5 mm
L_2 = L_1 + 7.4 mm

Mating direction to the PCB: 90 ° ▸ Solder pin length: 5 mm

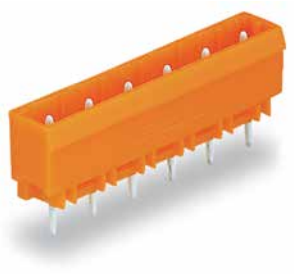

231-736/001-000

Pole number	Item No.	PU
2	231-732/001-000	200
3	231-733/001-000	200
4	231-734/001-000	100
5	231-735/001-000	100
6	231-736/001-000	100
7	231-737/001-000	50
8	231-738/001-000	50
9	231-739/001-000	50
10	231-740/001-000	50
11	231-741/001-000	50
12	231-742/001-000	50

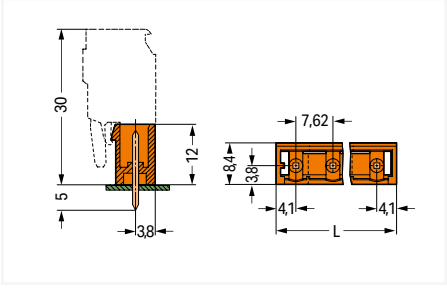

L = (pole no. – 1) x pin spacing + 8.2 mm

PU = packaging unit; SPU = subpackaging unit; Dimensions in mm

Variants:
- Other pole numbers
- 3.8 mm pin projection for male headers with straight solder pins
- Gold-plated or partially gold-plated contact surfaces
- Other versions (or variants) can be requested from WAGO Sales or configured at https://configurator.wago.com/.

THT male header ▸ *MCS* MIDI Classic ▸ 231 Series

Pin spacing: 7.62 mm / 0.3 inches ▸ Solder pin dimensions: 1.2 x 1.2 mm ▸ Color: orange

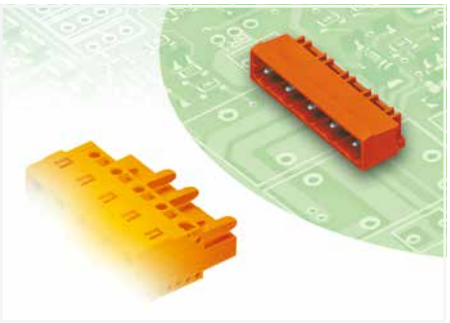

- Horizontal or vertical PCB mounting via straight or angled solder pins
- 1.2 x 1.2 mm solder pins allow nominal current up to 16 A, enhancing stability of shorter headers
- With coding fingers

Derating Curve
1-conductor female connector (231-202/026-000) with
THT male header (231-862/001-000)
Pin spacing: 7.5 mm / Conductor cross-section: 2.5 mm² "f-st"
Based on: EN 60512-5-2 / Reduction factor: 0.8

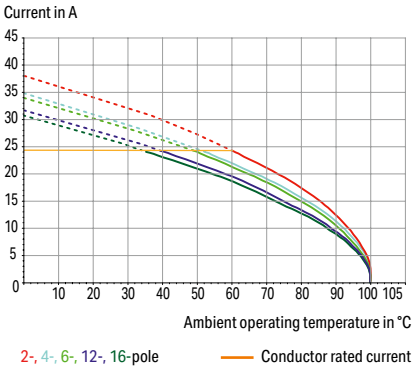

Electrical data			
Ratings per	**IEC/EN 60664-1**		
Overvoltage category	III	III	II
Pollution degree	3	2	2
Nominal voltage	500 V	630 V	1000 V
Rated impulse withstand voltage	6 kV	6 kV	6 kV
Rated current	16 A	16 A	16 A
Approvals per	**UL 1059**		
Use group	B	C	D
Rated voltage	300 V	-	300 V
Rated current	15 A	-	10 A
Approvals per	**CSA**		
Use group	B	C	D
Rated voltage	300 V	-	300 V
Rated current	15 A	-	10 A

Material data	
Material group	I
Insulation material (main housing)	Polyamide (PA66)
Flammability class per UL94	V0
Contact material	Electrolytic copper (E_{Cu})
Contact Plating	Tin

Mechanical data	
Solder pin arrangement	over the entire male connector (in-line)
Number of solder pins per potential	1
Solder pin dimensions	1.2 x 1.2 mm
Drilled hole diameter	1.7 $^{(+0.1)}$ mm

Environmental requirements	
Limit temperature range	-60 … +100 °C
Processing temperature	-35 … +60 °C

Note:
The *MCS – MULTI CONNECTION SYSTEM* includes connectors without breaking capacity in accordance with DIN EN 61984. When used as intended, these connectors must not be connected/disconnected when live or under load.When used as intended, these connectors must not be connected/disconnected when live or under load. The circuit design should ensure header pins, which can be touched, are not live when unmated.

Coding Page 814
Installation Page 818
See technical section for further information
Approvals and corresponding ratings, visit www.wago.com

THT male header ▸ *MCS* MIDI Classic ▸ 231 Series

Pin spacing: 7.62 mm / 0.3 inches ▸ Solder pin dimensions: 1.2 x 1.2 mm ▸ Color: orange

Mating direction to the PCB: 0 ° ▸ Solder pin length: 3.8 mm

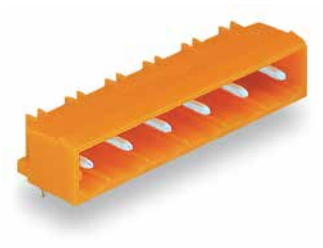

231-966/001-000

Pole number	Item No.	PU
2	231-962/001-000	200
3	231-963/001-000	200
4	231-964/001-000	100
5	231-965/001-000	100
6	231-966/001-000	100
7	231-967/001-000	50
8	231-968/001-000	50
9	231-969/001-000	50
10	231-970/001-000	50
11	231-971/001-000	50
12	231-972/001-000	50

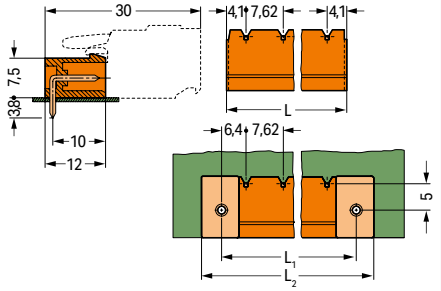

L = (pole no. – 1) x pin spacing + 8.2 mm
L_1 = L + 5 mm
L_2 = L_1 + 7.4 mm

Mating direction to the PCB: 90 ° ▸ Solder pin length: 5 mm

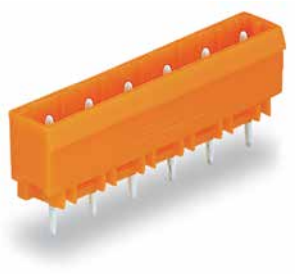

231-766/001-000

Pole number	Item No.	PU
2	231-762/001-000	200
3	231-763/001-000	200
4	231-764/001-000	100
5	231-765/001-000	100
6	231-766/001-000	100
7	231-767/001-000	50
8	231-768/001-000	50
9	231-769/001-000	50
10	231-770/001-000	50
11	231-771/001-000	50
12	231-772/001-000	50

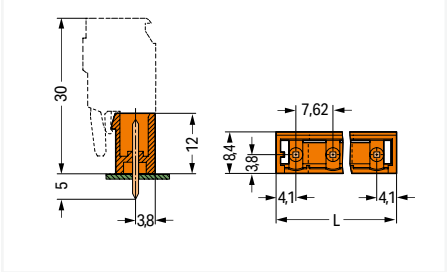

L = (pole no. – 1) x pin spacing + 8.2 mm

PU = packaging unit; SPU = subpackaging unit; Dimensions in mm

Variants:
- Other pole numbers
- 3.8 mm pin projection for male headers with straight solder pins
- Gold-plated or partially gold-plated contact surfaces
- Other versions (or variants) can be requested from WAGO Sales or configured at https://configurator.wago.com/.

Direct Marking

MCS MIDI and *MCS* MIDI Classic



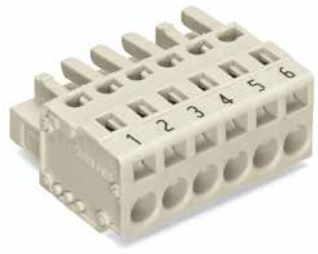

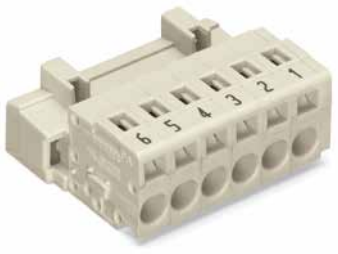

The pole numbers of male and female connectors for CAGE CLAMP® termination can be marked via factory direct marking.

Two standard marking orientations are available:
1. Marking perpendicular to conductor entry
2. Marking parallel to conductor entry

Other custom marking options are available upon request.

Direct marking is not suitable for MCS PCB Male Headers. WAGO recommends pole marking on the PCB for these headers.

Female headers with solder pins are exposed to aggressive flux agents during wave soldering. Custom direct marking procedures are available upon request for these items.

The marking type is always defined by the second 4-digit block of the item no. suffix for items with standard colors and materials.
Example: 721-106/. . . . - xxxx
xxxx = Item no. suffix for direct marking

Direct marking of 1-conductor female connectors; perpendicular to conductor entry; 1 … pole no.;
item no. suffix.: /. . . - 047

Version	Item No. Example
1-conductor female connector; 5 mm pin spacing; 6-pole; light gray	**721-106/026-047**
1-conductor female connector; with locking levers; 5 mm pin spacing; 6-pole; light gray	**721-106/037-047**
1-conductor female connector; with strain relief plate; 5 mm pin spacing; 6-pole; light gray	**721-106/026-047/ 034-000**
1-conductor female connector; with locking levers and strain relief plate; 5 mm pin spacing; 6-pole; light gray	**721-106/026-047/ 034-000**

Direct marking of 1-conductor male connectors; perpendicular to conductor entry; pole no. … 1;
item no. suffix.: /. . . - 044

Version	Item No. Example
1-conductor male connector; 6-pole; light gray	**721-606/000-044**
1-conductor male connector; with mounting flanges; 6-pole; light gray	**721-606/019-044**
1-conductor male connector; with mounting flanges and strain relief plate; 6-pole; light gray	**721-606/019-044/ 034-000**

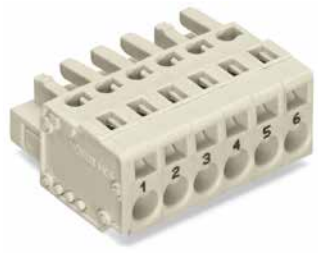



Direct marking of 1-conductor female connectors; parallel to conductor entry; 1 … pole no.;
item no. suffix.: /. . . - 9037

Version	Item No. Example
1-conductor female connector; 5 mm pin spacing; 6-pole; light gray	**721-106/026-9037**
1-conductor female connector; with locking levers; 5 mm pin spacing; 6-pole; light gray	**721-106/037-9037**
1-conductor female connector; with strain relief plate; 5 mm pin spacing; 6-pole; light gray	**721-106/026-9037/ 034-000**
1-conductor female connector; with locking levers and strain relief plate; 5 mm pin spacing; 6-pole; light gray	**721-106/037-9037/ 034-000**

Direct marking of 1-conductor male connectors; parallel to conductor entry; pole no. … 1;
item no. suffix.: /. . . - 9034

Version	Item No. Example
1-conductor male connector; 5 mm pin spacing; 6-pole; light gray	**721-606/000-9034**
1-conductor male connector; with mounting flanges; 5 mm pin spacing; 6-pole; light gray	**721-606/019-9034**
1-conductor male connector; with mounting flanges and strain relief plate; 5 mm pin spacing; 6-pole; light gray	**721-606/019-9034/ 034-000**

Direct Marking

MCS MIDI and *MCS* MIDI Classic



Direct marking of 1-conductor female connectors with push-buttons; perpendicular to conductor entry; 1 ... pole no.; item no. suffix.: /. . . - 047

Version	Item No. Example
1-conductor female connector; with push-buttons; 5 mm pin spacing; 6-pole; light gray	**2721-106/026-047**
1-conductor female connector; with locking levers; 5 mm pin spacing; 6-pole; light gray	**2721-106/037-047**
1-conductor female connector; with push-buttons and strain relief plate; 5 mm pin spacing; 6-pole; light gray	**2721-106/026-047/ 134-000**
1-conductor female connector; with push-buttons; locking levers and strain relief plate; 5 mm pin spacing; 6-pole; light gray	**2721-106/037-047/ 134-000**

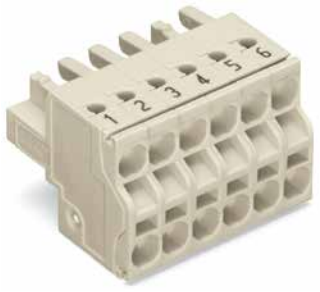

Direct marking of 2-conductor female connectors; perpendicular to conductor entry; 1 ... pole no.; item no. suffix.: /. . . - 047

Version	Item No. Example
2-conductor female connector; 6-pole; light gray	**721-2106/026-047**
2-conductor female connector; with locking levers; 6-pole; light gray	**721-2106/037-047**
2-conductor female connector; with locking levers and strain relief plate; 6-pole; light gray	**721-2106/026-047/ 134-000**

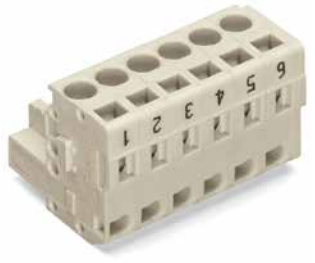

Direct marking of 1-conductor angled female connectors; perpendicular to conductor entry; 1 ... pole no.; item no. suffix.: /. . . - 047

Version	Item No. Example
1-conductor angled female connector; 6-pole; light gray	**722-206/026-047**
1-conductor angled female connector; with strain relief plate; 6-pole; light gray	**722-206/026-047/ 034-000**



Direct marking of 1-conductor female connectors with push-buttons; parallel to conductor entry; 1 ... pole no.; item no. suffix.: /. . . - 9037

Version	Item No. Example
1-conductor female connector; with push-buttons; 5 mm pin spacing; 6-pole; light gray	**2721-106/026-9037**
1-conductor female connector; with push-buttons and locking levers; 5 mm pin spacing; 6-pole; light gray	**2721-106/037-9037**
1-conductor female connector; with push-buttons and strain relief plate; 5 mm pin spacing; 6-pole; light gray	**2721-106/026-9037/ 134-000**
1-conductor female connector; with push-buttons; locking levers and strain relief plate; 5 mm pin spacing; 6-pole; light gray	**2721-106/037-9037/ 134-000**



Direct marking of 2-conductor female connectors; parallel to conductor entry; 1 ... pole no.; item no. suffix.: /. . . - 9037

Version	Item No. Example
2-conductor female connector; 5 mm pin spacing; 6-pole; light gray	**721-2106/026-9037**
2-conductor female connector; with locking levers; 5 mm pin spacing; 6-pole; light gray	**721-2106/037-9037**
2-conductor female connector; with locking levers and strain relief plate; 5 mm pin spacing 6-pole; light gray	**721-2106/026-9037/ 134-000**



Direct marking of 1-conductor angled female connectors; parallel to conductor entry; 1 ... pole no.; item no. suffix.: /. . . - 047

Version	Item No. Example
1-conductor angled female connector; 5 mm pin spacing; 6-pole; light gray	**722-206/026-9037**
1-conductor angled female connector; with strain relief plate; 5 mm pin spacing; 6-pole; light gray	**722-206/026-9037/ 034-000**

9

Direct Marking

MCS MIDI and *MCS* MIDI Classic

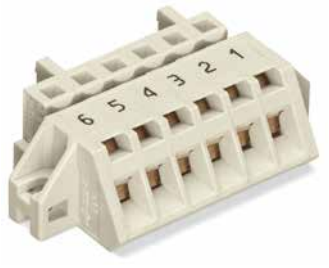

Direct marking of 2-conductor angled female connectors for panel mounting; perpendicular to conductor entry; 1 ... pole no.; item no. suffix.: /. . . - 047

Version	Item No. Example
1-conductor angled female connector; with flanges for panel mounting; 5 mm pin spacing; 6-pole; light gray	**721-306/031-047**
1-conductor angled female connector; for panel mounting; with snap-in mounting feet; 5 mm pin spacing; 6-pole; light gray	**721-306/008-047**

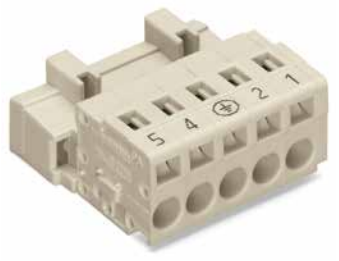

Direct marking of 3- to 5-pole; 1-conductor male connectors with preceding ground contact; perpendicular to conductor entry; pole assignment;
item no. suffix.: /. . . - 042

Version	Item No. Example
1-conductor male connector; with preceding ground contact; 5 mm pin spacing; 5-pole; light gray	**721-605/000-042**

1-conductor male connectors in 3- to 5-pole versions (721 and 723 Series) are available with the following markings:

3-pole: 3 - ⏚ - 1
4-pole: 4 - ⏚ - 2 - 1
5-pole: 5 - 4 - ⏚ - 2 - 1

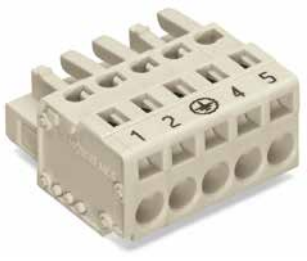

Direct marking of 3- to 5-pole; 1-conductor female connectors for 1-conductor male connectors with preceding ground contact; perpendicular to conductor entry; pole assignment; item no. suffix.: /. . . - 045

Version	Item No. Example
1-conductor female connector; with preceding ground contact; 5 mm pin spacing; 5-pole; light gray	**721-105/026-045**

1-conductor female connectors in 3- to 5-pole versions (721, 2721, 722 and 723 Series) for 1-conductor male connectors with preceding ground contact are available with the following markings:

3-pole: 1 - ⏚ - 3
4-pole: 1 - 2 - ⏚ - 4
5-pole: 1 - 2 - ⏚ - 4 - 5



Direct marking of 1-conductor angled female connectors for panel mounting; parallel to conductor entry; 1 ... pole no.; item no. suffix.: /. . . - 9037

Version	Item No. Example
1-conductor angled female connector; with flanges for panel mounting; 5 mm pin spacing; 6-pole; light gray	**721-306/031-9037**
1-conductor angled female connector; for panel mounting; with snap-in mounting feet; 5 mm pin spacing; 6-pole; light gray	**721-306/008-9037**

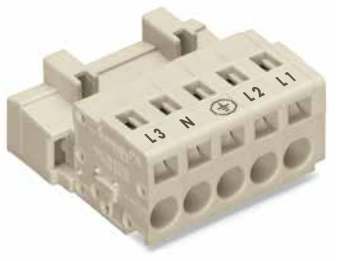

Direct marking of 3- to 5-pole; 1-conductor male connectors with preceding ground contact; perpendicular to conductor entry; pole assignment;
item no. suffix.: /. . . - 041

Version	Item No. Example
1-conductor male connector; with preceding ground contact; 5 mm pin spacing; 5-pole; light gray	**721-605/000-041**

1-conductor male connectors in 3- to 5-pole versions (721 and 723 Series) are available with the following markings:

3-pole: N - ⏚ - L 1
4-pole: L 2 - ⏚ - N - L 1
5-pole: L 3 - N - ⏚ - L 2 - L 1

Pole no. ... 1; item no. suffix.: /. . . - 043

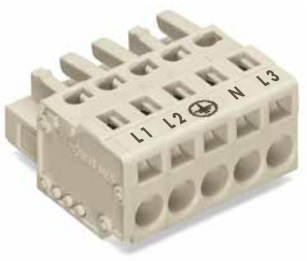

Direct marking of 3- to 5-pole; 1-conductor female connectors for 1-conductor male connectors with preceding ground contact; perpendicular to conductor entry; pole assignment; item no. suffix.: /. . . - 046

Version	Item No. Example
1-conductor female connector; with preceding ground contact; 5 mm pin spacing; 5-pole; light gray	**721-105/026-046**

1-conductor female connectors in 3- to 5-pole versions (721, 2721, 722 and 723 Series) for 1-conductor male connectors with preceding ground contact are available with the following markings:

3-pole: L 1 - ⏚ - N
4-pole: L 1 - N - ⏚ - L 2
5-pole: L 1 - L 2 - ⏚ - N - L 3

1 ... pole no.; item no. suffix.: /. . . - 047

Cutout Dimensions

MCS MIDI

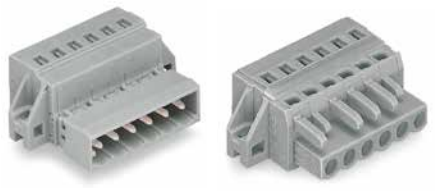



Table 1:
Cutout for 231. 721. 723 and 731 Series Male and Female Connectors with Mounting Flanges

	Pin Spacing 5 mm		Pin Spacing 5.08 mm		Pin Spacing 7.5 mm		Pin Spacing 7.62 mm	
Pole No.	L1	L2	L1	L2	L1	L2	L1	L2
2	13.4	18.4	13.6	18.6	15.9	20.9	16	21
3	18.4	23.4	18.6	23.6	23.4	28.4	23.6	28.6
4	23.4	28.4	23.7	28.7	30.9	35.9	31.3	36.3
5	28.4	33.4	28.8	33.8	38.4	43.4	38.9	43.9
6	33.5	38.3	34	38.8	46	50.8	46.6	51.4
7	38.5	43.3	39.1	43.9	53.5	58.3	54.2	59
8	43.5	48.3	44.1	48.9	61	65.8	61.8	66.6
9	48.5	53.3	49.2	54	68.5	73.3	69.5	74.3
10	53.5	58.3	54.3	59.1	76	80.8	77.1	81.9
11	58.5	63.3	59.4	64.2	83.5	88.3	84.7	89.5
12	63.5	68.3	64.5	69.3	91	95.8	92.3	97.1
13	68.6	73.2	69.6	74.2	98.6	103.2	100	104.6
14	73.6	78.2	74.7	79.3	106.1	110.7	107.7	112.3
15	78.6	83.2	79.8	84.4	113.6	118.2	115.3	119.9
16	83.6	88.2	84.9	89.5	121.1	125.7	122.9	127.5
17	88.6	93.2	90	94.6	128.6	133.2	130.5	135.1
18	93.6	98.2	95	99.6	136.1	140.7	138.1	142.7
19	98.7	103.1	100.2	104.6	143.7	148.1	145.9	150.3
20	103.7	108.1	105.3	109.7	151.2	155.6	153.5	157.9
21	108.7	113.1	110.4	114.8	158.7	163.1	161.1	165.5
22	113.7	118.1	115.5	119.9	166.2	170.6	168.7	173.1
23	118.7	123.1	120.5	124.9	173.7	178.1	176.3	180.7
24	123.7	128.1	125.6	130	181.2	185.6	184	188.4

Self-tapping screws,
for 1.8 mm ± 0.1 mm Ø mounting hole

Dimensions	Item No.	PU (SPU)
B 2.2 x 9.5 mm	**209-147**	200 (100)
B 2.2 x 13 mm	**231-194**	200 (100)

Screws with nuts,
for 2.5 mm ± 0.1 mm Ø mounting hole

Dimensions	Item No.	PU (SPU)
M 2 x 12 mm	**231-195**	200 (100)

Screws with nuts,
for 3.0 mm ± 0.1 mm Ø mounting hole

Dimensions	Item No.	PU (SPU)
M 2.5 x 10 mm	**231-295**	200 (100)

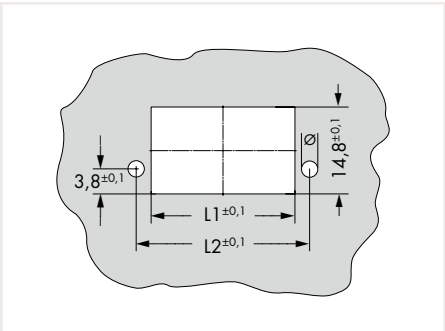

Drilled hole Ø depends on the type of screw used (see mounting screws).



PU = Packaging Unit; SPU = Subpackaging Unit; Dimensions in mm

Additional information on through-panel mounting and cutout dimensions is available upon request.

Cutout Dimensions

MCS MIDI





Table 2:
Cutout for 2721 and 2231 Series Female Connectors with Mounting Flanges

	Pin Spacing 5 mm		Pin Spacing 5.08 mm		Pin Spacing 7.5 mm		Pin Spacing 7.62 mm	
Pole No.	L1	L2	L1	L2	L1	L2	L1	L2
2	13.2	18.4	13.4	18.6	15.7	20.9	15.8	21
3	18.2	23.4	18.4	23.6	23.2	28.4	23.4	28.6
4	23.2	28.4	23.5	28.7	30.7	35.9	31.1	36.3
5	28.2	33.4	28.6	33.8	38.2	43.4	38.7	43.9
6	33.4	38.3	33.9	38.8	45.9	50.8	46.5	51.4
7	38.4	43.3	39	43.9	53.4	58.3	54.1	59
8	43.4	48.3	44	48.9	60.9	65.8	61.7	66.6
9	48.4	53.3	49.1	54	68.4	73.3	69.4	74.3
10	53.4	58.3	54.2	59.1	75.9	80.8	77	81.9
11	58.4	63.3	59.3	64.2	83.4	88.3	84.6	89.5
12	63.4	68.3	64.4	69.3	90.9	95.8	92.2	97.1
13	68.6	73.2	69.6	74.2	98.6	103.2	100	104.6
14	73.6	78.2	74.7	79.3	106.1	110.7	107.7	112.3
15	78.6	83.2	79.8	84.4	113.6	118.2	115.3	119.9
16	83.6	88.2	84.9	89.5	121.1	125.7	122.9	127.5
17	88.6	93.2	90	94.6	128.6	133.2	130.5	135.1
18	93.6	98.2	95	99.6	136.1	140.7	138.1	142.7
19	98.8	103.1	100.3	104.6	143.8	148.1	146	150.3
20	103.8	108.1	105.4	109.7	151.3	155.6	153.6	157.9
21	108.8	113.1	110.5	114.8	158.8	163.1	161.2	165.5
22	113.8	118.1	115.6	119.9	166.3	170.6	168.8	173.1
23	118.8	123.1	120.6	124.9	173.8	178.1	176.4	180.7
24	123.8	128.1	125.7	130	181.3	185.6	184.1	188.4

Self-tapping screws,
for 1.8 mm ± 0.1 mm Ø mounting hole

Dimensions	Item No.	PU (SPU)
B 2.2 x 9.5 mm	**209-147**	200 (100)
B 2.2 x 13 mm	**231-194**	200 (100)

Screws with nuts,
for 2.5 mm ± 0.1 mm Ø mounting hole

Dimensions	Item No.	PU (SPU)
M 2 x 12 mm	**231-195**	200 (100)

Screws with nuts,
for 3.0 mm ± 0.1 mm Ø mounting hole

Dimensions	Item No.	PU (SPU)
M 2.5 x 10 mm	**231-295**	200 (100)

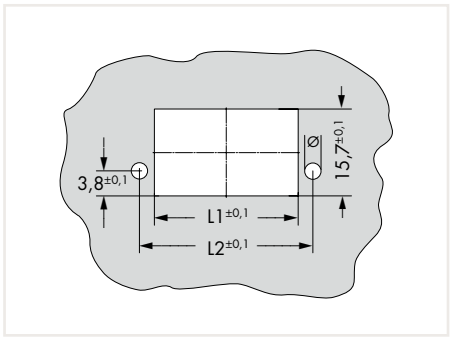

Drilled hole Ø depends on the type of screw used (see mounting screws).

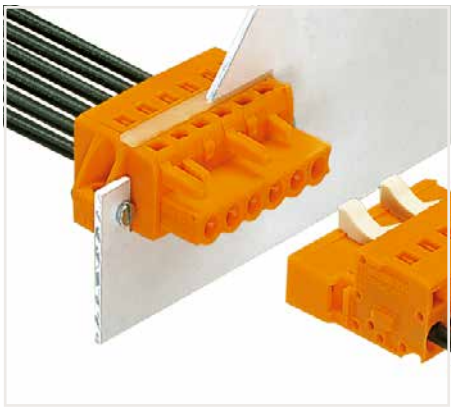

PU = Packaging Unit; SPU = Subpackaging Unit; Dimensions in mm

Additional information on through-panel mounting and cutout dimensions is available upon request.

Cutout Dimensions

MCS MIDI

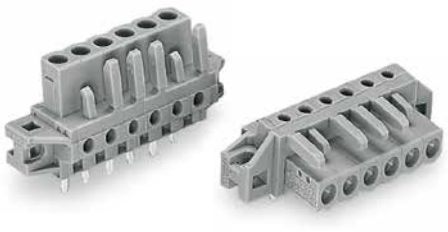



Table 3:
Cutout for 232 and 722 Series THT Female Headers with Mounting Flanges

	Pin Spacing 5 mm		Pin Spacing 5.08 mm		Pin Spacing 7.5 mm		Pin Spacing 7.62 mm	
Pole No.	L1	L2	L1	L2	L1	L2	L1	L2
2	13.4	18.4	13.6	18.6	15.9	20.9	16	21
3	18.4	23.4	18.6	23.6	23.4	28.4	23.6	28.6
4	23.4	28.4	23.7	28.7	30.9	35.9	31.3	36.3
5	28.4	33.4	28.8	33.8	38.4	43.4	38.9	43.9
6	33.5	38.3	34	38.8	46	50.8	46.6	51.4
7	38.5	43.3	39.1	43.9	53.5	58.3	54.2	59
8	43.5	48.3	44.1	48.9	61	65.8	61.8	66.6
9	48.5	53.3	49.2	54	68.5	73.3	69.5	74.3
10	53.5	58.3	54.3	59.1	76	80.8	77.1	81.9
11	58.5	63.3	59.4	64.2	83.5	88.3	84.7	89.5
12	63.5	68.3	64.5	69.3	91	95.8	92.3	97.1
13	68.6	73.2	69.6	74.2	98.6	103.2	100	104.6
14	73.6	78.2	74.7	79.3	106.1	110.7	107.7	112.3
15	78.6	83.2	79.8	84.4	113.6	118.2	115.3	119.9
16	83.6	88.2	84.9	89.5	121.1	125.7	122.9	127.5
17	88.6	93.2	90	94.6	128.6	133.2	130.5	135.1
18	93.6	98.2	95	99.6	136.1	140.7	138.1	142.7
19	98.7	103.1	100.2	104.6	143.7	148.1	145.9	150.3
20	103.7	108.1	105.3	109.7	151.2	155.6	153.5	157.9
21	108.7	113.1	110.4	114.8	158.7	163.1	161.1	165.5
22	113.7	118.1	115.5	119.9	166.2	170.6	168.7	173.1
23	118.7	123.1	120.5	124.9	173.7	178.1	176.3	180.7
24	123.7	128.1	125.6	130	181.2	185.6	184	188.4

Self-tapping screws,
for 1.8 mm ± 0.1 mm Ø mounting hole

Dimensions	Item No.	PU (SPU)
B 2.2 x 9,5 mm	**209-147**	200 (100)
B 2.2 x 13 mm	**231-194**	200 (100)

Screws with nuts,
for 2.5 mm ± 0.1 mm Ø mounting hole

Dimensions	Item No.	PU (SPU)
M 2 x 12 mm	**231-195**	200 (100)

Screws with nuts,
for 3.0 mm ± 0.1 mm Ø mounting hole

Dimensions	Item No.	PU (SPU)
M 2.5 x 10 mm	**231-295**	200 (100)

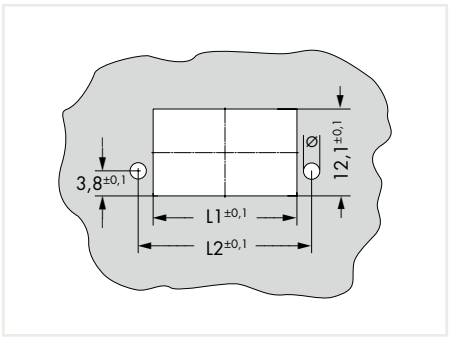

Drilled hole Ø depends on the type of screw used (see mounting screws).

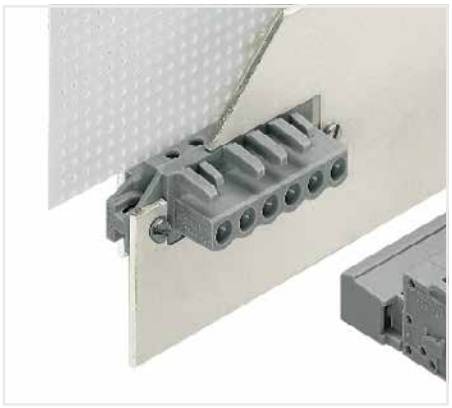

PU = Packaging Unit; SPU = Subpackaging Unit; Dimensions in mm

Additional information on through-panel mounting and cutout dimensions is available upon request.

Cutout Dimensions

MCS MIDI





Table 4:
Cutout for 231 Series THT Male Headers with Mounting Flanges

	Pin Spacing 5 mm			Pin Spacing 7,5 mm		
Pole No.	L1	L2	L3	L1	L2	L3
2	13.6	8.9	9.5	16.1	10.6	10.8
3	18.6	11.4	12	23.6	14.3	14.5
4	23.6	13.9	14.5	31.1	18.1	18.3
5	28.6	16.4	17	38.6	21.8	22
6	33.8	19	19.6	46.3	25.7	25.9
7	38.8	21.5	22.1	53.8	29.4	29.6
8	43.8	24	24.6	61.3	33.2	33.4
9	48.8	26.5	27.1	68.8	36.9	37.1
10	53.8	29	29.6	76.3	40.7	40.9
11	58.8	31.5	32.1	83.8	44.4	44.6
12	63.8	34	34.6	91.3	48.2	48.4
13	69	36.6	37.2	99	52	52.2
14	74	39.1	39.7	106.5	55.8	56
15	79	41.6	42.2	114	59.5	59.7
16	84	44.1	44.7	121.5	63.3	63.5
17	89	46.6	47.2	129	67	67.2
18	94	49.1	49.7	136.5	70.8	71
19	99.2	51.7	52.3	144.2	74.6	74.8
20	104.2	54.2	54.8	151.7	78.4	78.6
21	109.2	56.7	57.3	159.2	82.1	82.3
22	114.2	59.2	59.8	166.7	85.9	86.1
23	119.2	61.7	62.3	174.2	89.6	89.8
24	124.2	64.2	64.8	181.7	93.4	93.6

Self-tapping screws,
for 1.8 mm ± 0.1 mm Ø mounting hole

Dimensions	Item No.	PU (SPU)
B 2.2 x 9.5 mm	**209-147**	200 (100)
B 2.2 x 13 mm	**231-194**	200 (100)

Screws with nuts,
for 2.5 mm ± 0.1 mm Ø mounting hole

Dimensions	Item No.	PU (SPU)
M 2 x 12 mm	**231-195**	200 (100)

Screws with nuts,
for 3.0 mm ± 0.1 mm Ø mounting hole

Dimensions	Item No.	PU (SPU)
M 2.5 x 10 mm	**231-295**	200 (100)

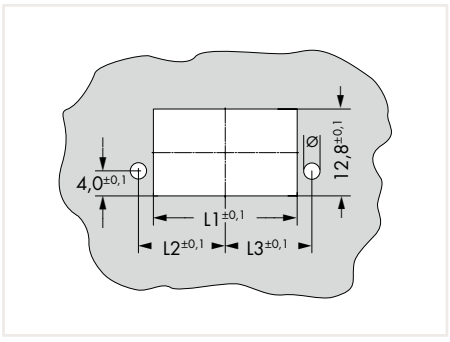

Drilled hole Ø depends on the type of screw used (see mounting screws).

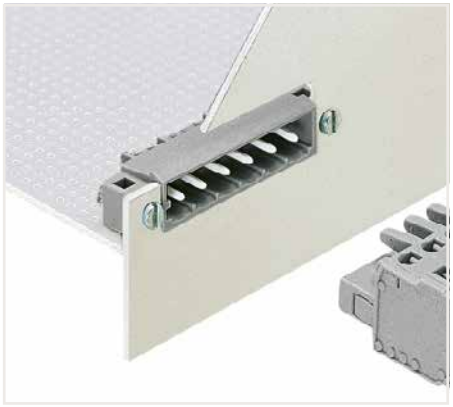

PU = Packaging Unit; SPU = Subpackaging Unit; Dimensions in mm

Additional information on through-panel mounting and cutout dimensions is available upon request.

Operating tool

Operating pliers ▸ Suitable: for male and female connectors with 3.5 mm, 3.81 mm, 5 mm, 5.08 mm, 7.5 mm and 7.62 mm pin spacing and CAGE CLAMP® connection ▸ Color: red



210-250

Color	Item No.	PU (SPU)
red	**210-250**	20 (1)

Operating lever ▸ Pin spacing: 5/7.62 mm ▸ Suitable: for male and female connectors with CAGE CLAMP® connection



231-131

Color	Item No.	PU (SPU)
white	**231-131**	100 (25)
red	**231-291**	100 (25)

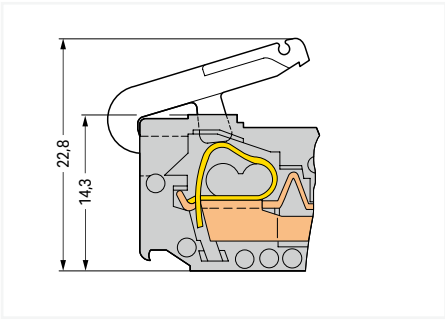

Operating levers are not suitable for panel-mount, angled female connectors.

Push-button/tool ▸ Pin spacing: 5/7.62 mm ▸ Suitable: for male and female connectors with CAGE CLAMP® connection



231-159

Color	Item No.	PU (SPU)
natural	**231-159**	100 (25)
red	**231-231**	100 (25)



Inserting a conductor via operating tool.



Inserting a conductor into CAGE CLAMP® unit via operating tool (231-291).



Conductor termination parallel to CAGE CLAMP® actuation

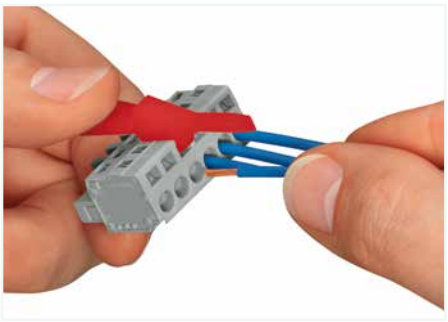

Conductor termination perpendicular to CAGE CLAMP® actuation

PU = packaging unit; SPU = subpackaging unit

Operating tool

Operation parallel to conductor entry ▸ Operating tool; insulated ▸ Pin spacing: 5/5.08 mm ▸ Suitable: for male and female connectors with CAGE CLAMP® connection ▸ Color: natural



209-130

Color	Item No.	PU (SPU)
natural	**209-130**	100 (1)

Operation parallel to conductor entry ▸ Operating tool; multipole; insulated ▸ Pin spacing: 5/5.08 mm ▸ Suitable: for male and female connectors with CAGE CLAMP® connection



280-440

Color	Item No.	PU (SPU)
white	**280-432**	100 (1)
white	**280-433**	100 (1)
white	**280-434**	40 (1)
gray	**280-435**	40 (1)
white	**280-436**	40 (1)
white	**280-437**	30 (1)
white	**280-438**	30 (1)
white	**280-440**	30 (1)



Inserting a male connector via multipole operating tool.

Operation perpendicular to conductor entry ▸ Operating tool; multipole; insulated ▸ Pin spacing: 5/5.08 mm ▸ Suitable: for male and female connectors with CAGE CLAMP® connection ▸ Color: natural



209-132

Color	Item No.	PU (SPU)
natural	**209-132**	40 (1)

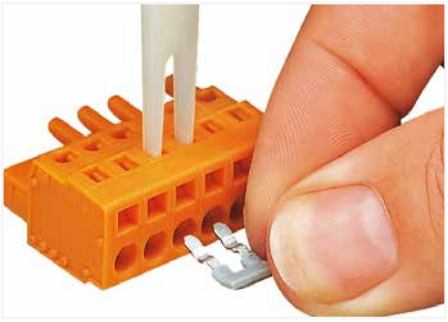

Operating tool for comb-style jumper bars (231-902)

PU = packaging unit; SPU = subpackaging unit

Coding

Coding key ▸ Suitable: for male connectors ▸ Color: light gray



Pin spacing: 5/5.08 mm		
Color	**Item No.**	PU (SPU)
◯ light gray	**231-129**	200 (100)

Pin spacing: 7.5/7.62 mm		
Color	**Item No.**	PU (SPU)
◯ light gray	**231-130**	200 (100)

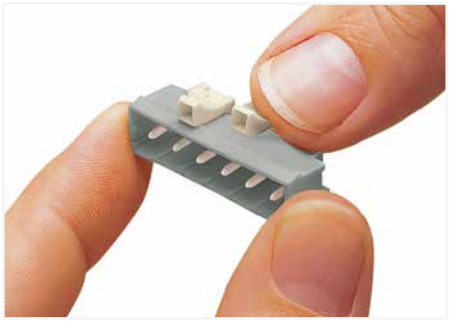

Coding a male header – fitting coding key(s).

Coding pin ▸ Suitable: for double-deck male headers; snaps into lower level ▸ Color: light gray



231-160

Color	**Item No.**	PU (SPU)
◯ light gray	**231-160**	200 (100)

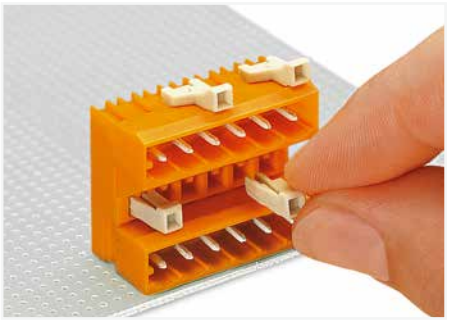

Coding a THT double-deck male header – lower level.

Coding pin carrier with 5 coding pins ▸ Suitable: for female connectors with conductor connection and levers ▸ Color: orange



2231-505

Color	**Item No.**	PU
● orange	**2231-505**	25

PU = packaging unit; SPU = subpackaging unit

Intermediate plate ▸ Suitable: for male connectors; for group formation ▸ Color: light gray



231-500

Color	Item No.	PU (SPU)
◯ light gray	**231-500**	200 (100)

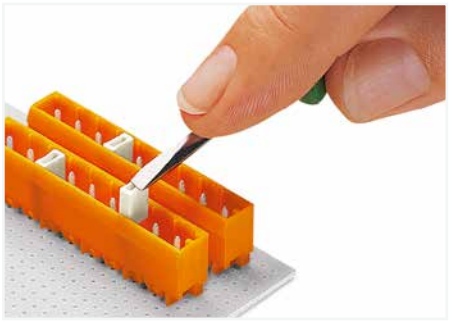

Inserting separators for group formation directly into MCS MIDI Classic Male Headers.
Group formation using separators means that pole count is reduced by at least one pole.
Female connectors with integrated end plates and 5/5.08 mm pin spacing are available for group formation without loss of poles. Formation of groups without the loss of any poles is possible without using separators for 7.5/7.62 mm pin spacing.

PU = packaging unit; SPU = subpackaging unit

Cover ▸ Lockout cap ▸ Suitable: for male and female connectors with CAGE CLAMP® connection



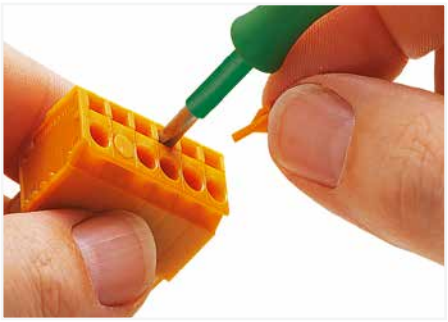

Color	Item No.	PU (SPU)
gray	**231-668**	500 (100)
orange	**231-669**	500 (100)

Covering unused clamping units in CAGE CLAMP®-equipped male and female connectors (e.g., when doubling the pin spacing to meet clearance and creepage distance requirements, or when a higher rated voltage is required). Lockout pins are not suitable for panel-mount, angled female connectors.

9

PU = packaging unit; SPU = subpackaging unit

Insulation stop ▸ Suitable: for male and female connectors with CAGE CLAMP® or Push-in CAGE CLAMP® connection



Pin spacing: 5/5.08 mm / 0.197/0.2 inches		
Color	**Item No.**	PU (SPU)
white	**231-670**	200 (25)
light gray	**231-671**	200 (25)
dark gray	**231-672**	200 (25)

Pin spacing: 7.5/7.62 mm / 0.295/0.3 inches		
Color	**Item No.**	PU (SPU)
white	**231-673**	200
light gray	**231-674**	200
dark gray	**231-675**	200 (25)



The problem: Wiring programmable logic controllers and microprocessor-operated control circuits often relies on very small, fine-
stranded conductors. These conductors are highly flexible and deform when pushed against the conductor stop in terminal blocks. As a result, the conductor insulation – not the copper conductor – may be clamped, causing intermittent contact or no contact at all. Common to all terminal block types currently offered, this problem creates unnecessary downtime for troubleshooting.

Insulation stops for connectors reliably ensure proper termination. Insulation stops automatically bundle the cores of fine-stranded conductors when inserted into the clamping unit, preventing splaying. This also limits the conductor entry to a defined cross sectional area – ensuring the actual conductor, not the insulation, will enter the clamping unit.

Insulation stops are available as dividable 5-pole strips for MCS MIDI Male and Female Connectors. Insulation stop usage will not affect the conductor strip lengths
for the aforementioned terminal strips.

Insulation stops are not suitable for
panel-mount female connectors.

PU = packaging unit; SPU = subpackaging unit

Mounting accessories

Locking device ▸ Suitable: for angled THT male headers



231-193

Color	Item No.	PU (SPU)
gray	**231-193**	100 (25)
orange	**231-393**	100



Locking devices enhance connection reliability between male headers with angled solder pins and the PCB. This substantially reduces mechanical stress on both solder pins and joints, particularly when dealing with small lengths and frequent mating cycles.

Mounting screw ▸ Screw with nut; M2x12



231-195

Length	Item No.	PU (SPU)
12 mm	**231-195**	200 (100)

Mounting screw ▸ Self-tapping screw; B 2.2x13



209-147

Length	Item No.	PU (SPU)
13 mm	**231-194**	200 (100)

PU = packaging unit; SPU = subpackaging unit

Mounting accessories

Mounting adapter, for DIN-35 rail ▸ Suitable: for male and female connectors with snap-in mounting feet ▸ Color: gray



209-137

Color	Item No.	PU
gray	209-137	25

Mounting foot, for DIN-35 rail ▸ Suitable: for male and female connectors with snap-in mounting feet (for panel mounting) ▸ Color: gray



209-120

Color	Item No.	PU (SPU)
gray	209-120	500 (25)

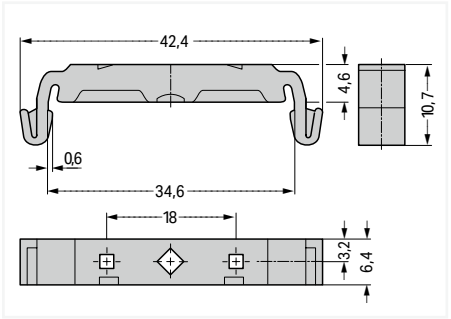

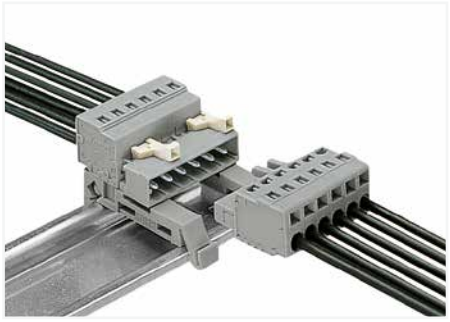

Female connector with snap-in mounting feet and 209-137 Mounting Adapter on DIN-35 rail

PU = packaging unit; SPU = subpackaging unit

Mounting accessories

Multi mounting adapter ▸ Suitable: for male and female connectors with snap-in mounting feet ▸ Color: gray



209-148

Color	Item No.	PU
gray	209-148	25

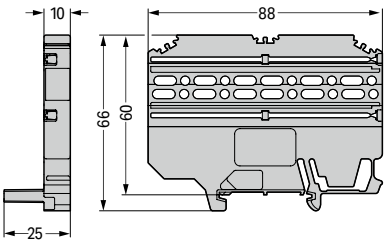



The pluggable male or female connector can also be fitted with a strain relief plate.

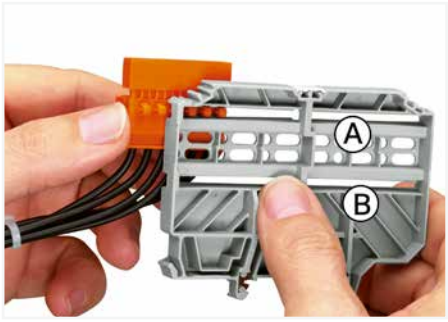

Both male and female connectors remain pluggable when they are mounted on the multi mounting adapter via its oblong holes or open grooves (A/B).



The adapter can be marked either with WSB, Mini-WSB or WMB markers.

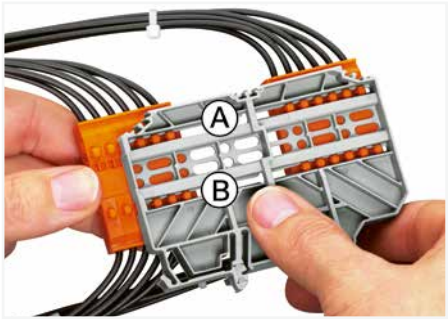

If a connector is pushed from the side into the open grooves (A/B) of the multi mounting adapter, the plug connection will be reliably protected from unintentional disconnection when mounted.



PU = packaging unit; SPU = subpackaging unit

Locking system ▸ Suitable: for female connectors with conductor connection and levers ▸ Color: orange

Lateral locking lever



2231-510

Color	Item No.	PU
orange	**2231-510**	50

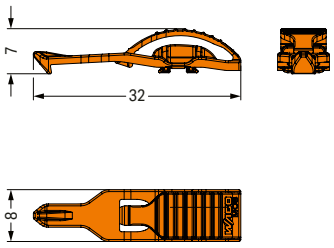

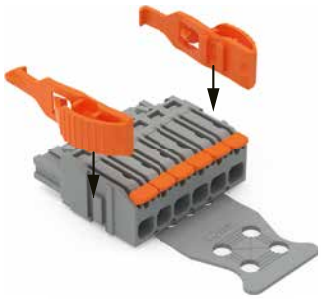

Install the side locking levers.

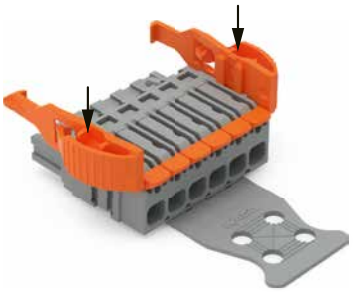

Insert the locking levers into the receptacles until fully inserted.

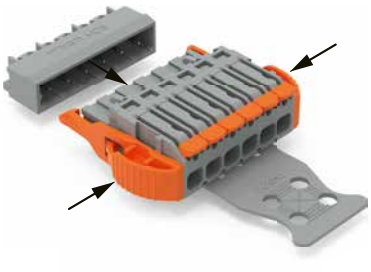

Disconnect the female connector after operating the locking mechanism.

PU = packaging unit; SPU = subpackaging unit; Dimensions in mm

Locking system ▸ Suitable: for female connectors with conductor connection and levers ▸ Color: orange

Center locking lever



2231-515

Color	Item No.	PU
orange	**2231-515**	100

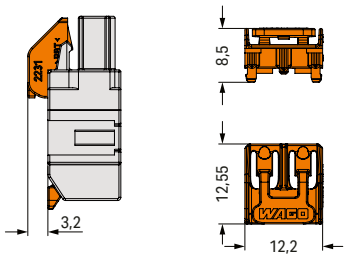

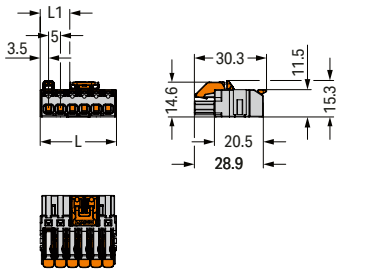

Pole no.	L	L1
5	27	7.4
6	32	12.4
7	37	12.4
8	42	17.4
10	52	22.4
12	62	27.4
16	82	37.4

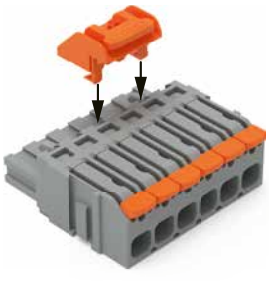

Install the center locking device.

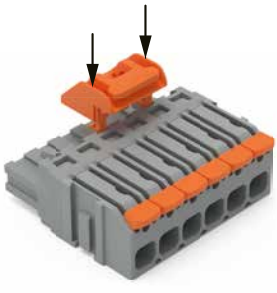

Insert the locking lever into the receptacles until fully inserted.

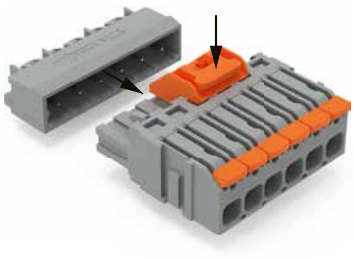

Disconnect the female connector after operating the locking mechanism.

PU = packaging unit; SPU = subpackaging unit; Dimensions in mm

Strain relief plate

Mounting type: Snap-on ▸ Color: gray

Suitable for 2-pole male and female headers with levers (2231 and 2721 Series)



2231-532

Width	Item No.	PU
9 mm	2231-532	25

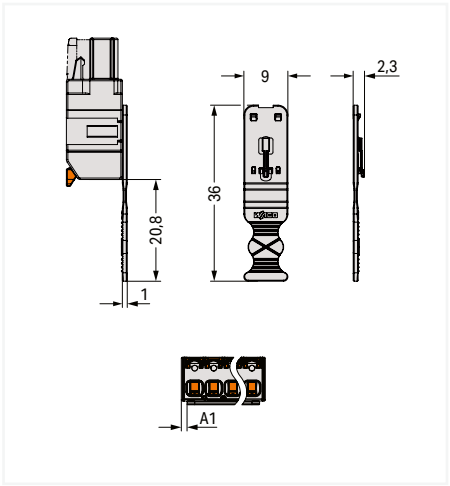

Pole no. 2: A1 = 1.5 mm

Suitable for 3-pole male and female headers with levers (2231 and 2721 Series)



2231-533

Width	Item No.	PU
14 mm	2231-533	25

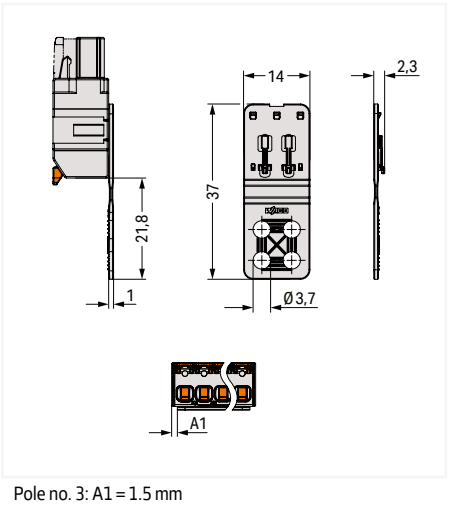

Pole no. 3: A1 = 1.5 mm

Suitable for 4 … 7-pole male and female headers with levers (2231 and 2721 Series)



2231-534

Width	Item No.	PU
19 mm	2231-534	25

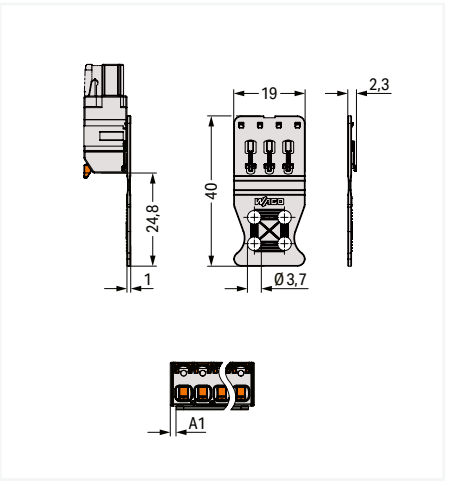

Pole no. 4: A1 = 1.5 mm
Pole no. 5: A1 = 6.5 mm
Pole no. 6: A1 = 6.5 mm
Pole no. 7: A1 = 11.5 mm

PU = packaging unit; SPU = subpackaging unit; Dimensions in mm

Strain relief plate

Mounting type: Snap-on ▸ Color: gray

Suitable for 8 … 11-pole male and female headers with levers (2231 and 2721 Series)



2231-535

Width	Item No.	PU
39 mm	2231-535	25

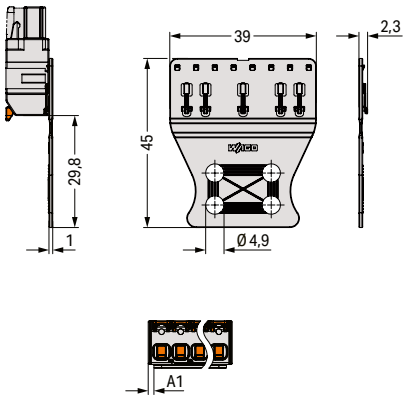

Pole no. 8: A1 = 1.5 mm
Pole no. 9: A1 = 6.5 mm
Pole no. 10: A1 = 6.5 mm
Pole no. 11: A1 = 11.5 mm

Suitable for 12 … 16-pole male and female headers with levers (2231 and 2721 Series)



2231-536

Width	Item No.	PU
59 mm	2231-536	25

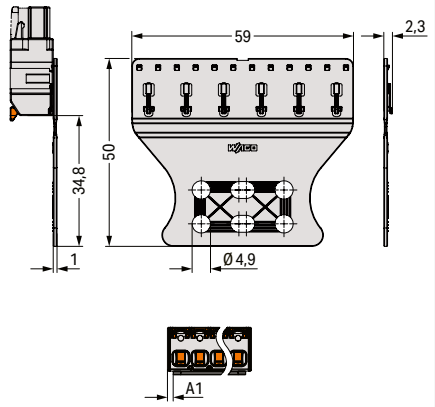

Pole no. 12: A1 = 1.5 mm
Pole no. 13: A1 = 6.5 mm
Pole no. 14: A1 = 6.5 mm
Pole no. 15: A1 = 11.5 mm
Pole no. 16: A1 = 11.5 mm

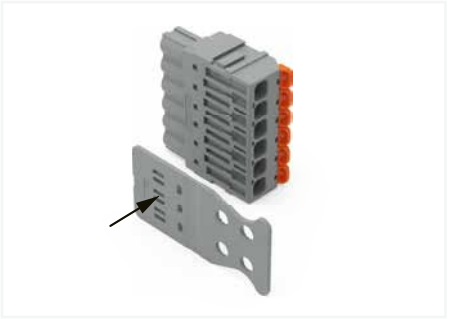

Montage der Zugentlastungsplatte



Zugentlastungsplatte in die Aufnahme einführen und bis zum Anschlag in Leiteranschlussrichtung ziehen.



Zugentlastungsplatte; feldseitig montiert

PU = packaging unit; SPU = subpackaging unit; Dimensions in mm

Strain relief plate

Mounting type: Insert

Suitable for standard male and female connectors (2.5 mm; 3.5 mm; 5 mm; 7.5 mm pin spacing) ▸ Color: gray



734-326

Width	Item No.	PU (SPU)
6 mm	**734-327**	100 (25)
12.5 mm	**734-328**	100 (25)
25 mm	**734-329**	100 (25)
35 mm	**734-326**	100 (25)
55 mm	**734-430**	50 (25)
75 mm	**734-431**	50 (25)

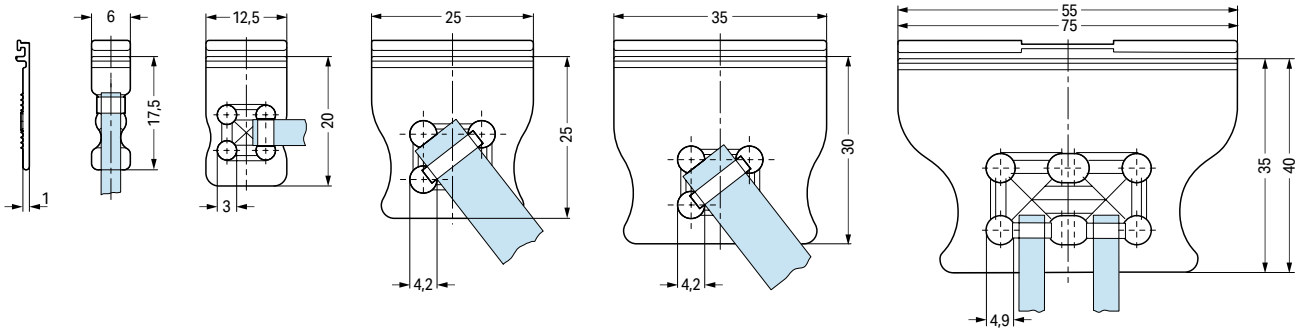

The arrangement of the attachments for cable ties allows single conductors or multi-core cables to be secured in different ways. The width of the cable ties must correspond to the hole dimensions of the strain relief plates shown above.

PU = packaging unit; SPU = subpackaging unit; Dimensions in mm

Strain relief plate

Mounting type: Insert

Suitable for standard male and female connectors (3.81 mm; 5.08 mm; 7.62 mm pin spacing) ▸ Color: orange



734-229

Width	Item No.	PU (SPU)
6 mm	**734-227**	100 (25)
12.5 mm	**734-228**	100 (25)
25 mm	**734-229**	100 (25)
35 mm	**734-226**	100 (25)
55 mm	**734-428**	50 (25)
75 mm	**734-429**	50 (25)

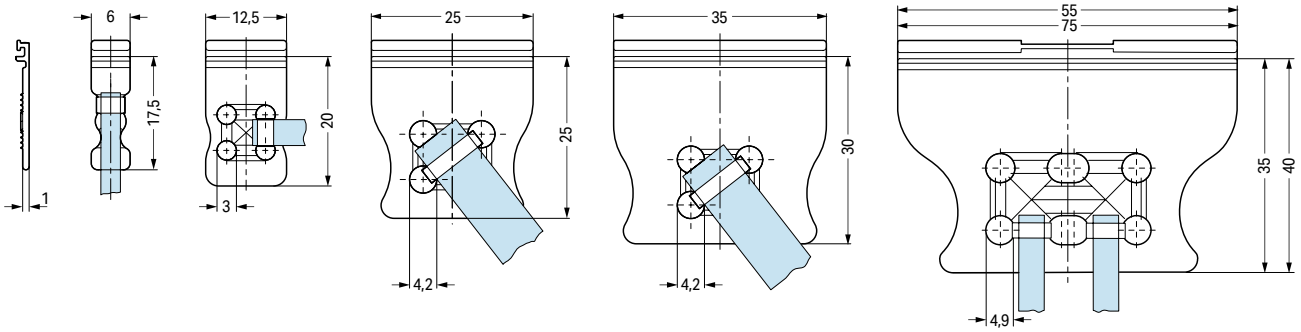

The arrangement of the attachments for cable ties allows single conductors or multi-core cables to be secured in different ways. The width of the cable ties must correspond to the hole dimensions of the strain relief plates shown above.

PU = packaging unit; SPU = subpackaging unit; Dimensions in mm

Strain relief plate

Mounting type: Insert

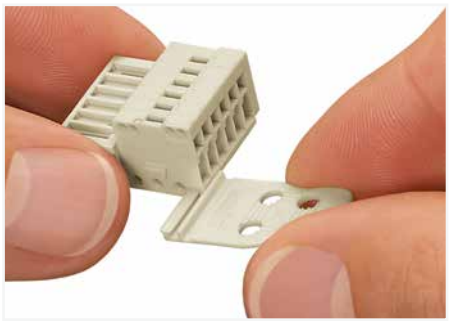

Strain relief plates for factory or in-the-field assembly



Strain relief plate, for factory assembly
1-conductor female connector, 2.5 mm pin spacing, light gray,
12-pole, with strain relief plate
733-112/034-000



Strain relief plate, for factory assembly
1-conductor female connector, 2.5 mm pin spacing, light gray,
2-pole, with strain relief plate (733-102/032-000)

Strain relief housing ▸ Suitable for standard male and female connectors

Pin spacing: 5 mm / 0.197 inches ▸ Color: gray

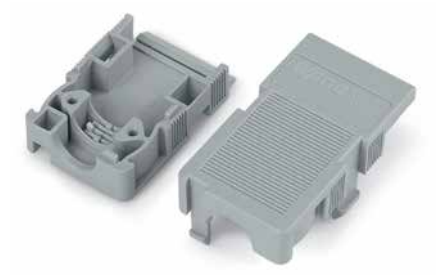

Width	Item No.	PU
13 mm	232-602	25
18 mm	232-603	25
23 mm	232-604	25
28 mm	232-605	25
33 mm	232-606	25
38 mm	232-607	25
43 mm	232-608	25
48 mm	232-609	25
53 mm	232-610	25
63 mm	232-612	25

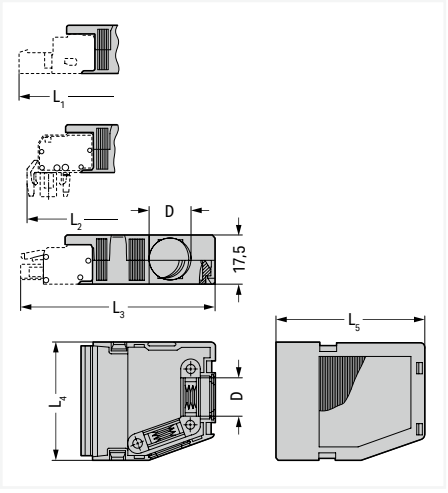

- 2- to 3-pole; only suitable for cable ties; 1 cable outlet (rear side); max. 3.6 mm cable tie width
- 4- to 6-pole; suitable for cable clamp; 1 x cable outlet (rear side)
- 7- to 8-pole; suitable for cable clamp; 1 x cable outlet (rear side) and 1 x cable outlet (side); 1 cover (included)
- 9- to 16-pole; suitable for cable clamp; 1 x cable outlet (rear side) and 2 x cable outlets (side); 2 covers (included)
- Cable ties and binding tools are not offered by WAGO.

Pin spacing: 5.08 mm / 0.2 inches ▸ Color: orange

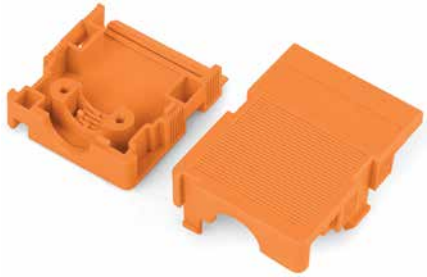

Width	Item No.	PU
13 mm	232-632	25
18 mm	232-633	25
23 mm	232-634	25
28 mm	232-635	25
33 mm	232-636	25
38 mm	232-637	25
43 mm	232-638	25
48.7 mm	232-639	25
53.8 mm	232-640	25
64 mm	232-642	25
85 mm	232-646	25

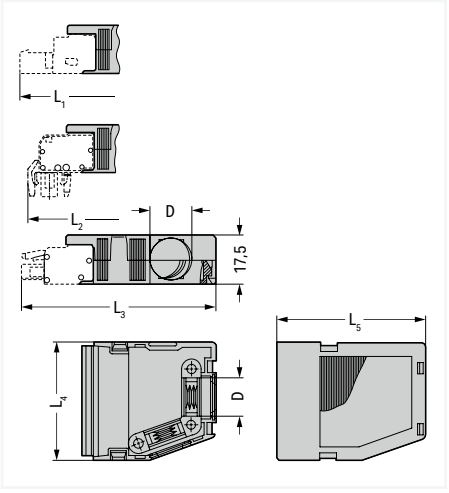

- 2- to 3-pole; only suitable for cable ties; 1 cable outlet (rear side); max. 3.6 mm cable tie width
- 4- to 6-pole; suitable for cable clamp; 1 x cable outlet (rear side)
- 7- to 8-pole; suitable for cable clamp; 1 x cable outlet (rear side) and 1 x cable outlet (side); 1 cover (included)
- 9- to 16-pole; suitable for cable clamp; 1 x cable outlet (rear side) and 2 x cable outlets (side); 2 covers (included)
- Cable ties and binding tools are not offered by WAGO.

Pin spacing: 7.5 mm / 0.295 inches ▸ Color: gray



Width	Item No.	PU
15.5 mm	232-662	25
23 mm	232-663	25
30.5 mm	232-664	25
38 mm	232-665	25
53 mm	232-667	25
54 mm	232-670	25

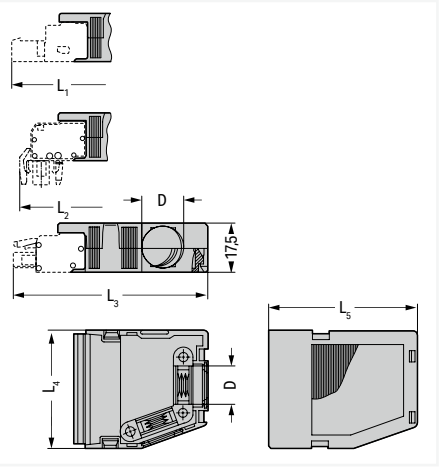

- 2-pole; only suitable for cable ties; 1 cable outlet (rear side), max. cable tie width 3.6 mm;
- 3- to 4-pole; suitable for cable clamp; 1 x cable outlet (rear side);
- 5-pole; suitable for cable clamp; 1 x cable outlet (rear side) and 1 x cable outlets (side); 1 cover (included)
- 7-pole; suitable for cable clamp; 1 x cable outlet (rear side) and 2 x cable outlets (side); 2 covers (included)
- Cable ties and binding tools are not offered by WAGO.

PU = packaging unit; SPU = subpackaging unit; Dimensions in mm

Strain relief housing ▸ Suitable for standard male and female connectors

Pin spacing: 7.62 mm / 0.3 inches ▸ Color: orange

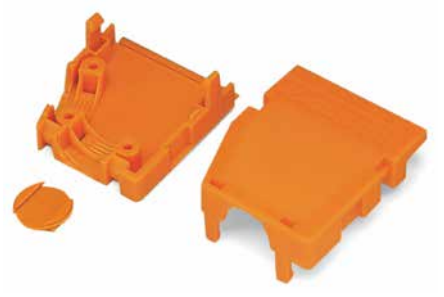

Width	Item No.	PU
15.5 mm	**232-682**	25
23 mm	**232-683**	25
30.5 mm	**232-684**	25
38 mm	**232-685**	25
53.8 mm	**232-687**	25

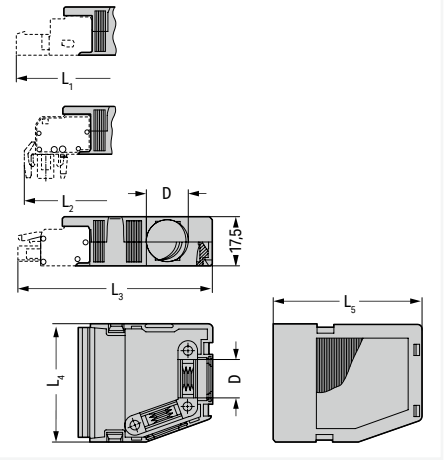

- 2-pole; only suitable for cable ties; 1 cable outlet (rear side), max. cable tie width 3.6 mm;
- 3- to 4-pole; suitable for cable clamp; 1 x cable outlet (rear side);
- 5-pole; suitable for cable clamp; 1 x cable outlet (rear side) and 1 x cable outlets (side); 1 cover (included)
- 7-pole; suitable for cable clamp; 1 x cable outlet (rear side) and 2 x cable outlets (side); 2 covers (included)
- Cable ties and binding tools are not offered by WAGO.

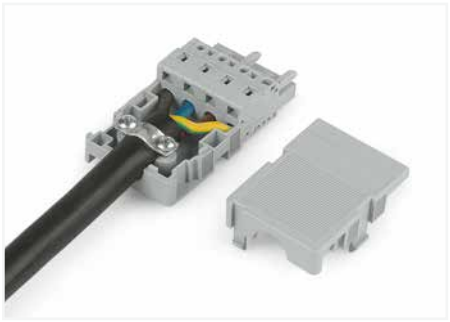

2- to 3-pole; only suitable for cable ties; max. 3.6 mm cable tie width
4- to 16-pole; suitable for cable clamp, covers (included)
Cable ties and binding tools are not offered by WAGO.

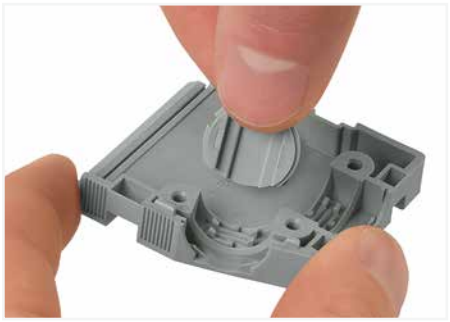

Snapping a cover into the unused cable outlet.



Strain relief housing shown with a male connector equipped with CAGE CLAMP®

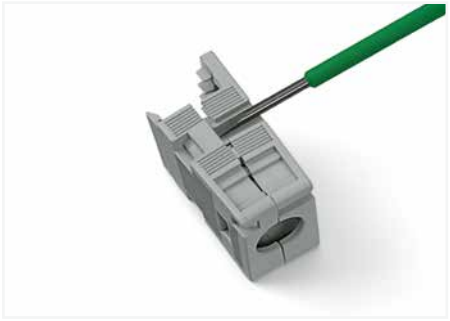

Disassembling a strain relief housing is only possible using an operating tool (e.g., 210-719).

PU = packaging unit; SPU = subpackaging unit; Dimensions in mm

Jumper ▸ Jumper bar ▸ Pin spacing: 5/5.08 mm / 0.197/0.2 inches ▸ Suitable: for male and female connectors with CAGE CLAMP® connection ▸ Color: gray



231-902

Pole number	Item No.	PU (SPU)
2	**231-902**	200 (25)
3	**231-903**	100 (25)
5	**231-905**	100 (25)
7	**231-907**	100 (25)
10	**231-910**	100 (25)



Notice: Insert jumper bar according to direction of symbols. □symbol correlates to the direction of the operating slot.



Inserting a comb-style jumper bar via multipole operating tool – with the female or male connector being supported in a suitable holding device.

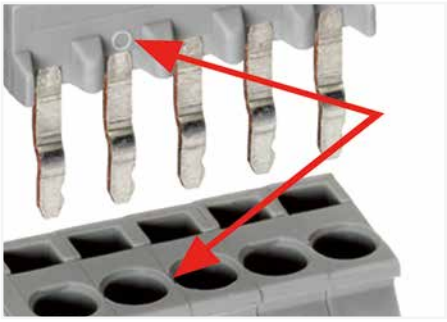

Notice: Insert jumper bar according to direction of symbols. □symbol shows direction to conductor entry.

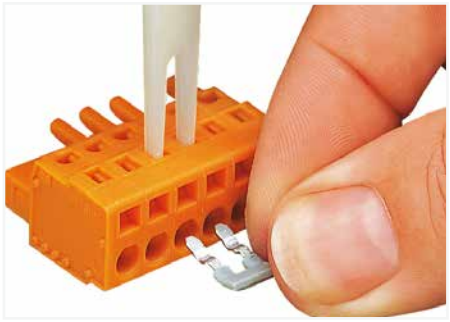

Operating tool for comb-style jumper bars (231-902)



Custom comb-style jumper bars are created by breaking off jumper contacts (3 contacts and more).

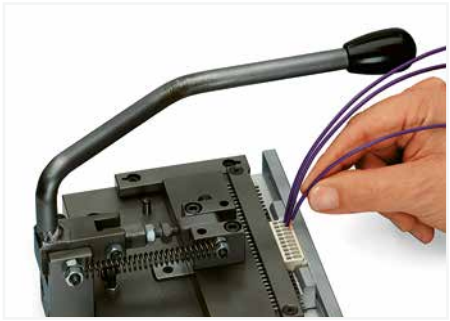

Both male and female connectors can be pre-assembled with comb-style jumper bars upon request.



Notice: Comb-style jumper bars reduce the conductor cross-section to 1.5 mm² "s" + "f-st."

PU = packaging unit; SPU = subpackaging unit

Testing accessories ▸ Test plug adapter ▸ Suitable: for female connectors ▸ Color: light gray



Electrical data				
Ratings per	**IEC/EN 60664-1**			
Overvoltage category	III	III	II	
Pollution degree	3	2	2	
Nominal voltage	-	250 V	-	
Rated impulse withstand voltage	-	4 kV	-	
Rated current	-	12 A	-	
Connection Data				
Connection technology	CAGE CLAMP®			
Strip length	8 … 9 mm / 0.31 … 0.35 inches			
Solid conductor	0.08 … 2.5 mm² / 28 … 12 AWG			
Fine-stranded conductor	0.08 … 2.5 mm² / 28 … 12 AWG			
Material data				
Material group	I			
Insulation material (main housing)	Polyamide (PA66)			
Flammability class per UL94	V0			
Environmental requirements				
Processing temperature	-35 … +60 °C			

9

See technical section for further information

Approvals and corresponding ratings, visit www.wago.com

Testing accessories ▸ Test plug adapter ▸ Suitable: for female connectors ▸ Color: light gray

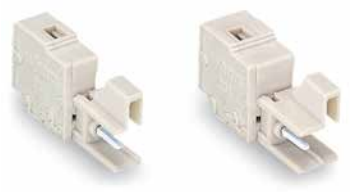

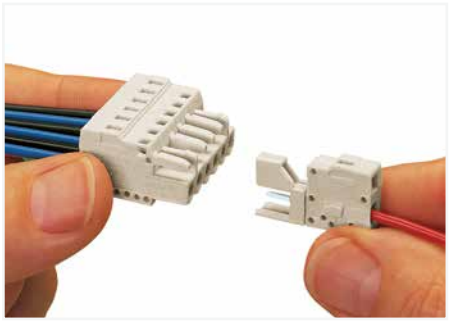

Test plug adapter with CAGE CLAMP® connection

Pin spacing: 5/5.08 mm / 0.197/0.2 inches		
Color	**Item No.**	PU (SPU)
◯ light gray	**231-661**	100 (25)

Pin spacing: 7.5/7.62 mm / 0.295/0.3 inches		
Color	**Item No.**	PU
◯ light gray	**231-662**	100

PU = packaging unit; SPU = subpackaging unit

Application Examples
PCB Connectors and Headers
MCS MIDI Classic

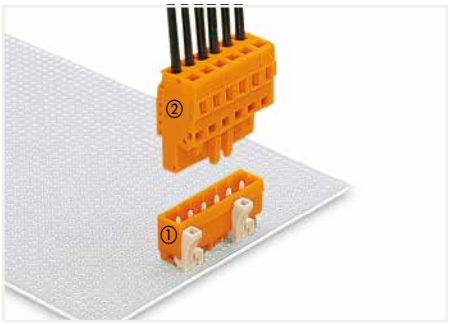

①*Male header with straight solder pins
②*Female connector with CAGE CLAMP®

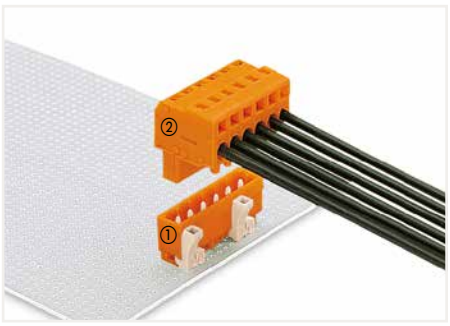

①*Male header with straight solder pins
②*Angled female connector, conductor entry same direction as latches

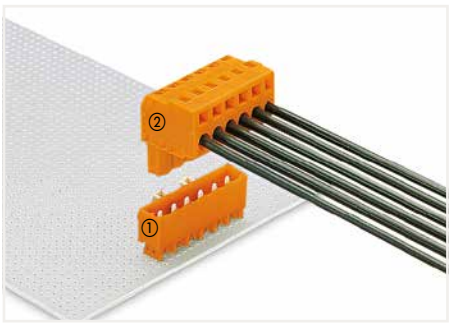

① Male header with straight solder pins
② Angled female connector, conductor entry opposite of latches

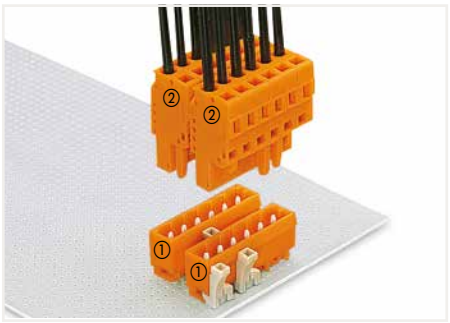

①*Male headers with straight solder pins**
②*Female connectors with CAGE CLAMP®

**Rear male header must be coded prior to soldering!

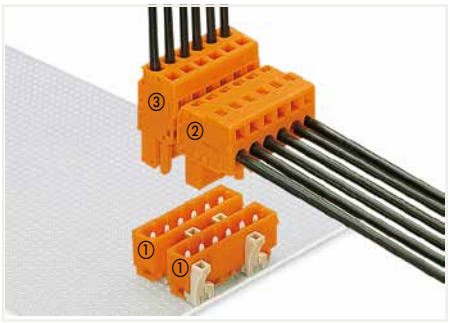

①*Male headers with straight solder pins**
②*Angled female connector, conductor entry same direction as latches
③*Female connector with CAGE CLAMP®

**Rear male header must be coded prior to soldering!

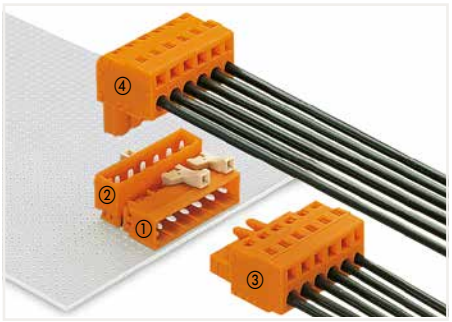

① Male header with angled solder pins
② Male header with straight solder pins
③ Female connector with CAGE CLAMP®
④ Angled female connector, conductor entry opposite of latches

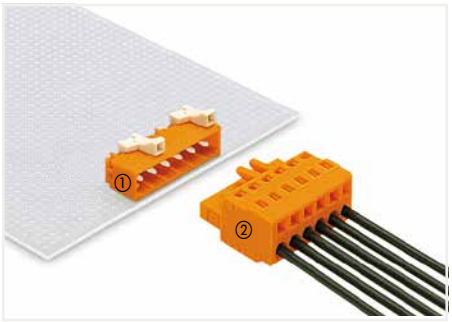

①*Male header with angled solder pins
②*Female connector with CAGE CLAMP®

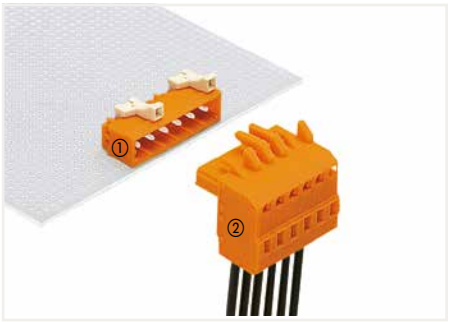

① Male header with angled solder pins
② Angled female connector, conductor entry opposite of latches



①*Male header with angled solder pins
②*Angled female connector, conductor entry same direction as latches

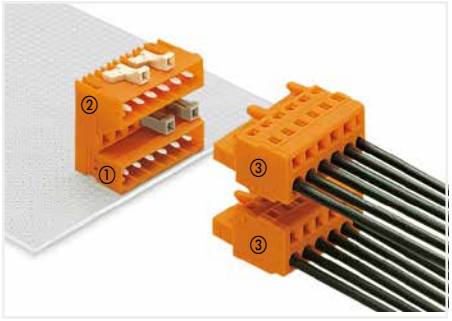

① Male header with angled solder pins
② Male header for double-deck assembly
③ Female connectors with CAGE CLAMP®

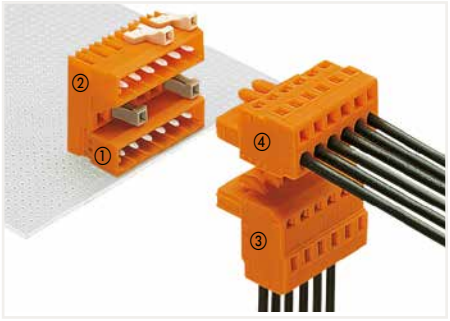

① Male header with angled solder pins
② Male header for double-deck assembly
③ Angled female connector, conductor entry opposite of latches
④ Female connector with CAGE CLAMP®

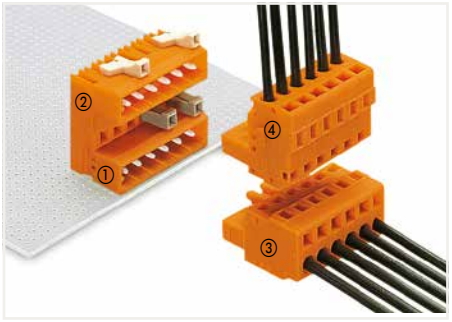

① Male header with angled solder pins
② Male header for double-deck assembly
③ Female connector with CAGE CLAMP®
④ Angled female connector, conductor entry same direction as latches

*also available in version "100 % protected against mismating" (see Section 5)

Application Examples
PCB Connectors and Headers
MCS MIDI Classic

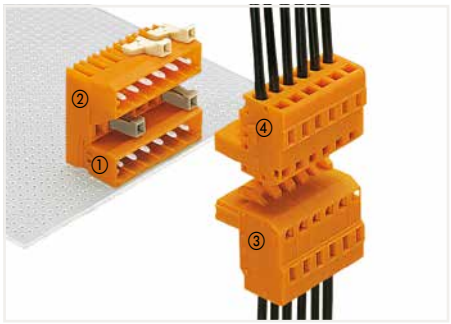

① Male header with angled solder pins
② Male header for double-deck assembly
③ Angled female connector, conductor entry opposite of latches
④ Angled female connector, conductor entry same direction as latches

Angled female connectors are available with conductor entries in the same direction as latches, or opposite of latches. This allows different conductor entry directions with the same mounting direction of the male headers. Angled female connectors with conductor entry opposite of latches are not available in versions that are 100 % protected against mismating.
Male headers and female connectors allow touch-proof supply to the PCB. Female headers and male connectors equipped with CAGE CLAMP® allow touch-proof supply from the PCB.
These combinations can also be used for coding different circuits.



Female connectors with strain relief plate

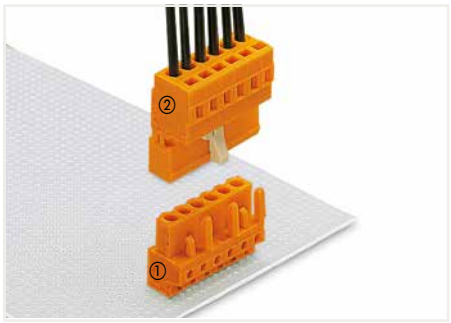

①*Female connector with straight solder pins
②*Male connector with CAGE CLAMP®

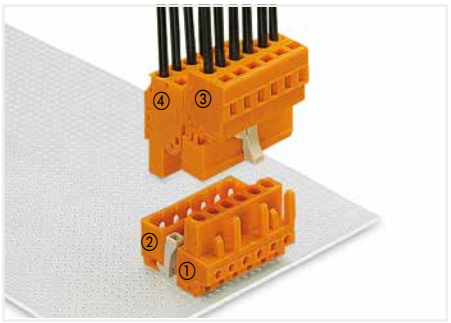

①*Female connector with straight solder pins
②*Male header with straight solder pins**
③*Male connector with CAGE CLAMP®
④*Female connector with CAGE CLAMP®

**Male header must be coded prior to soldering!

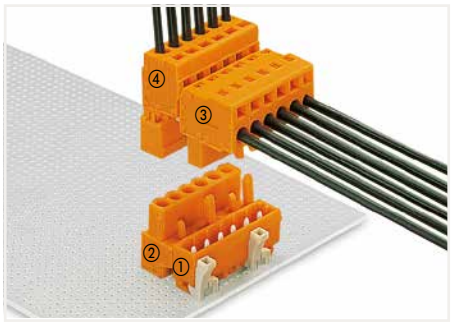

①*Male header with straight solder pins
②*Female header with straight solder pins
③*Angled female connector, conductor entry same direction as latches
④*Male connector with CAGE CLAMP®

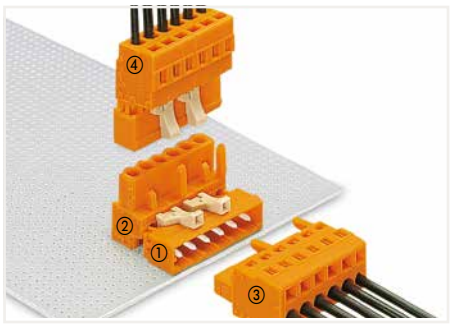

①*Male header with angled solder pins
②*Female header with straight solder pins
③*Female connector with CAGE CLAMP®
④*Male connector with CAGE CLAMP®

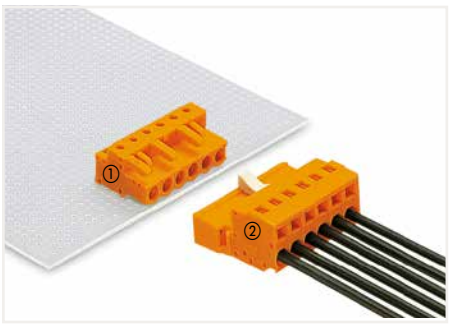

①*Female header with angled solder pins
②*Male connector with CAGE CLAMP®

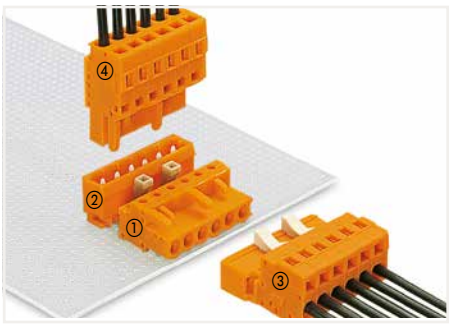

①*Female header with angled solder pins
②*Male header with straight solder pins**
③*Male connector with CAGE CLAMP®
④*Female connector with CAGE CLAMP®

**Male header must be coded prior to soldering!

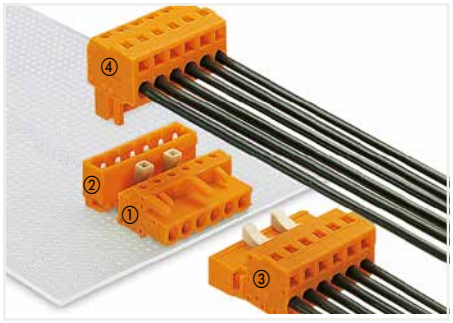

①*Female header with angled solder pins
②*Male header with straight solder pins**
③*Male connector with CAGE CLAMP®
④*Angled female connector, conductor entry same direction as latches

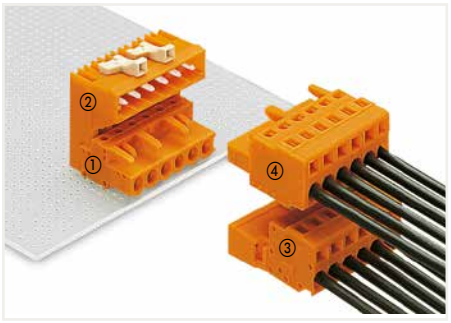

① Female header with angled solder pins
② Male header for double-deck assembly
③ Male connector with CAGE CLAMP®
④ Female connector with CAGE CLAMP®

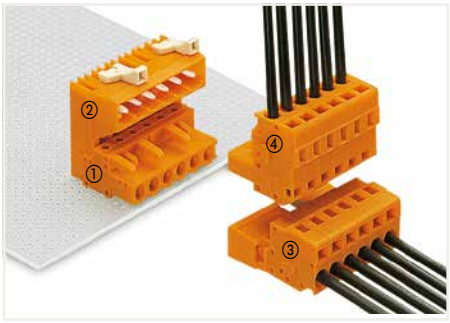

① Female header with angled solder pins
② Male header for double-deck assembly
③ Male connector with CAGE CLAMP®
④ Angled female connector, conductor entry same direction as latches

**Male header must be coded prior to soldering!

*also available in version "100 % protected against mismating" (see Section 5)

9

Application Examples PCB Headers and Connectors *MCS* MIDI Classic

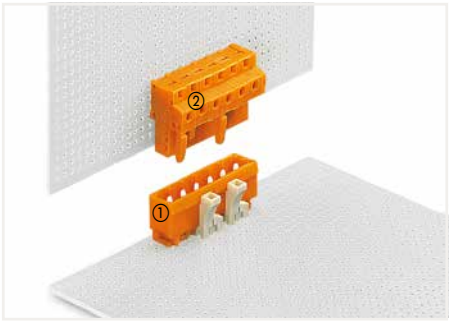

①*Male header with straight solder pins
②*Female header with angled solder pins

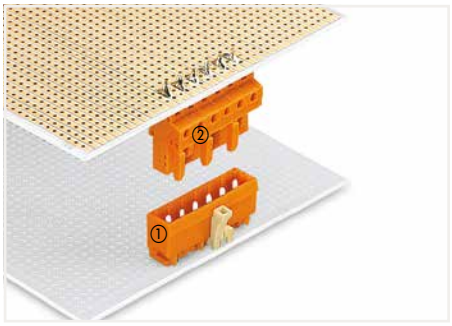

①*Male header with straight solder pins
②*Female header with straight solder pins

Total height when mated:
22.5 mm (0.886 inch)

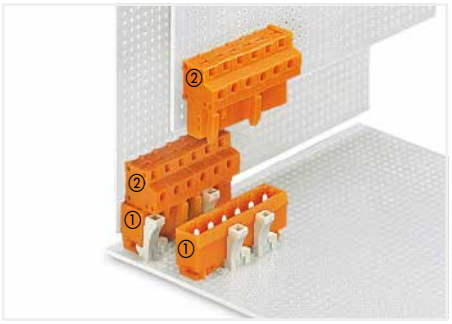

①*Male headers with straight solder pins
②*Female headers with angled solder pins

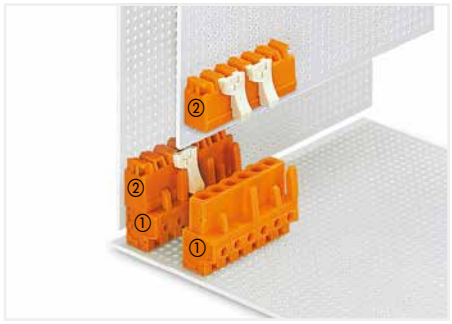

①*Female headers with straight solder pins
②*Male headers with angled solder pins

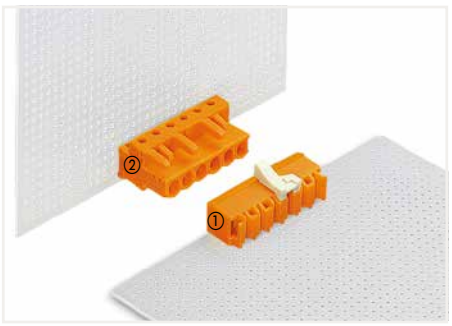

①*Male header with angled solder pins
②*Female header with straight solder pins

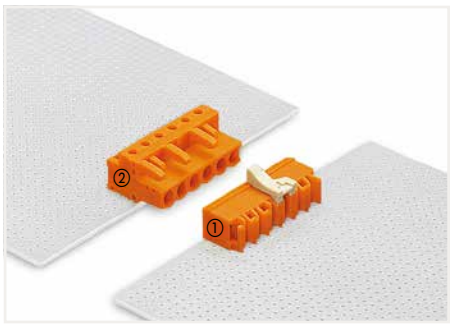

①*Male header with angled solder pins
②*Female header with angled solder pins

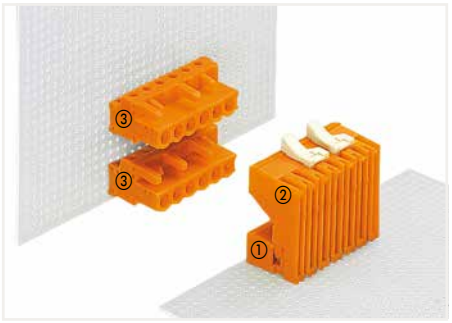

① Male header with angled solder pins
② Male header for double-deck assembly
③ Female header with straight solder pins

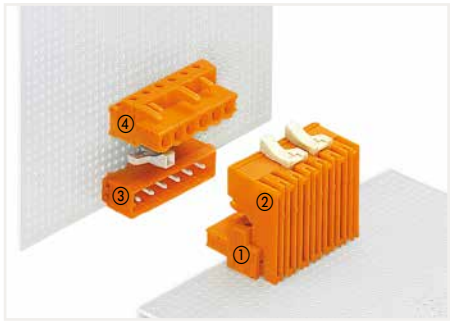

① Female header with angled solder pins
② Male header for double-deck assembly
③ Male header with straight solder pins
④ Female header with straight solder pins

Panel Feedthrough Connectors



Snap-on type strain relief housings

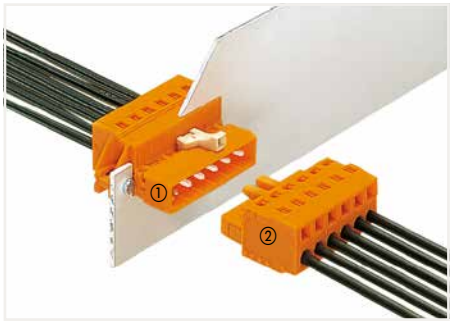

①*Male connector with mounting flanges and CAGE CLAMP®
②*Female connector with CAGE CLAMP®



①*Female connector with mounting flanges and CAGE CLAMP®
②*Male connector with CAGE CLAMP®

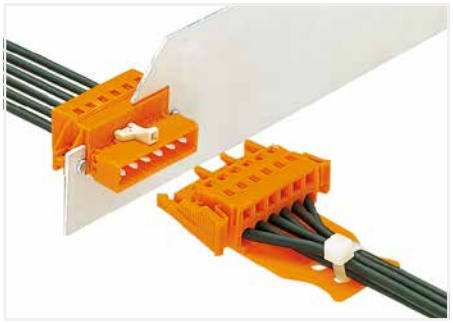

Female connector with locking levers and strain relief plate

*also available in version "100 % protected against mismating" (see Section 5); Cutout dimensions, see page 510

Application Examples
PCB Panel Feedthrough Headers

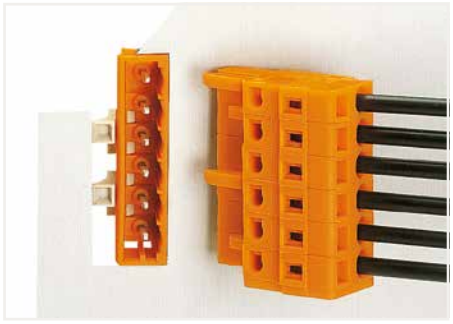

Panel feedthrough male header in large cutout
Coding via coding keys:
Coding finger(s) opposite to coding key(s) must be broken off.

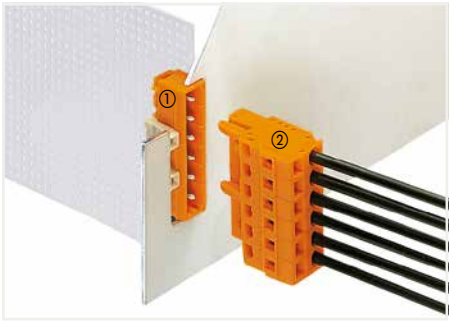

①*Male header with angled solder pins
②*Female connector with CAGE CLAMP®

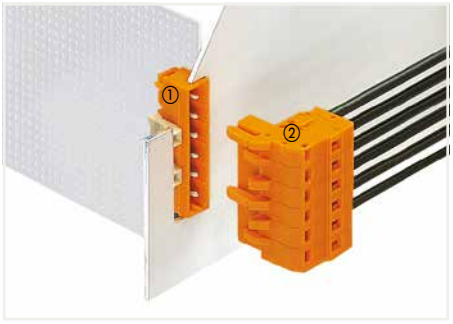

① Male header with angled solder pins
② Angled female connector,
conductor entry opposite of latches



①*Male header with angled solder pins
②*Angled female connector, conductor entry
same direction as latches

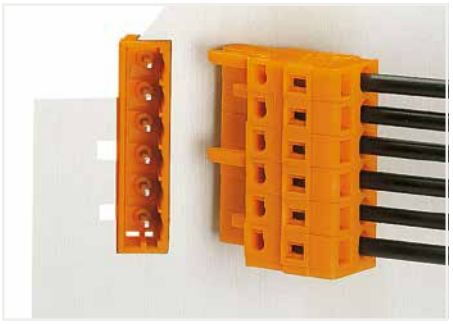

Panel feedthrough male header in small cutout
Coding via coding slots:
Leave the coding finger(s) on female connector in coding slot position(s).
Break off remaining fingers.

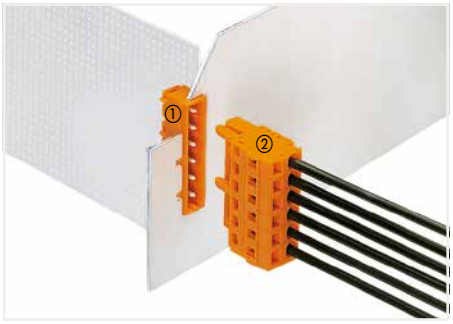

①*Male header with angled solder pins
②*Female connector with CAGE CLAMP®

Angled female connectors with mounting flanges are also available in version "100 % protected against mismating."

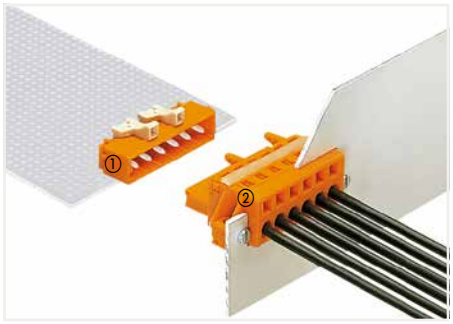

①*Male header with angled solder pins
②*Female connector with mounting flanges
and CAGE CLAMP®

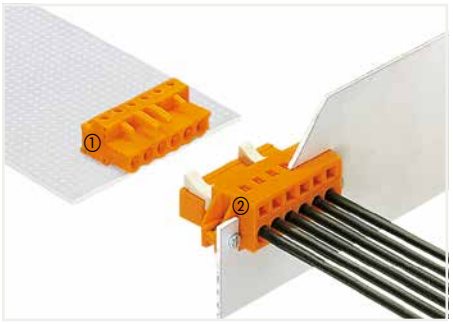

①*Female header with angled solder pins
②*Male connector with mounting flanges
and CAGE CLAMP®

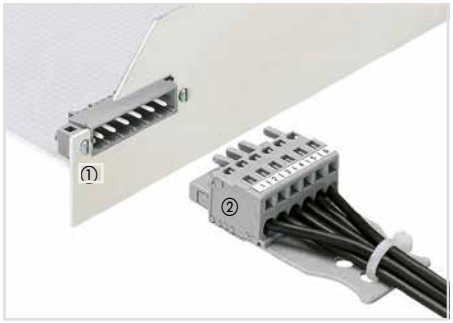

① Male header with mounting flanges
and solder pins
② Female connector with CAGE CLAMP®
Angled female connectors with mounting flanges are also available in version "100 % protected against mismating."

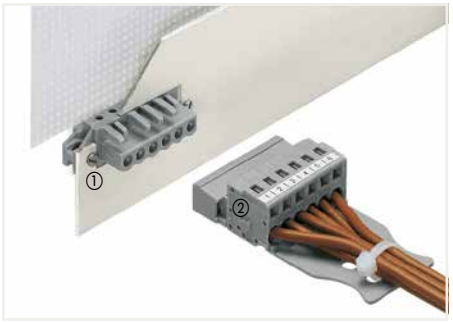

①*Female header with feedthrough flanges
and solder pins
②*Male connector with CAGE CLAMP®

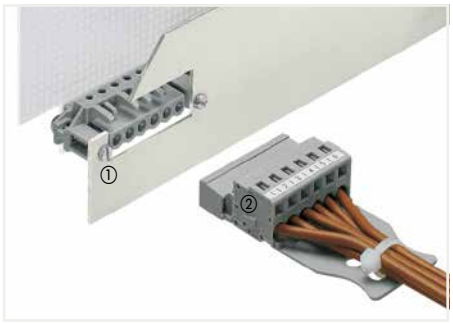

①*Female header with spacers
and solder pins
②*Male connector with CAGE CLAMP®

*also available in version "100 % protected against mismating" (see Section 5); Cutout dimensions, see page 510

Application Examples
Connectors for Different Mounting Types and Rail-Mount Connectors
MCS MIDI Classic



①*Male connector with CAGE CLAMP®
②*Female connector with CAGE CLAMP®



Male connector with CAGE CLAMP® and strain relief plate
Female connector with locking levers and strain relief plate

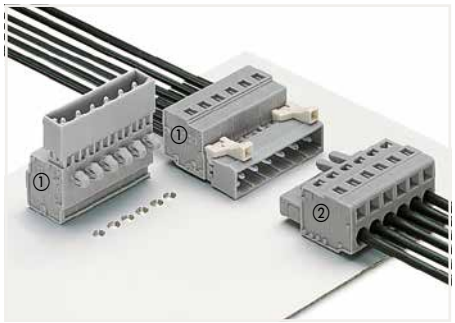

①*Male connector with snap-in mounting feet and CAGE CLAMP®
②*Female connector with CAGE CLAMP®

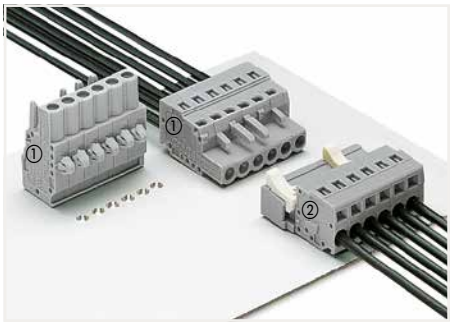

①*Female connector with snap-in mounting feet and CAGE CLAMP®
②*Male connector with CAGE CLAMP®

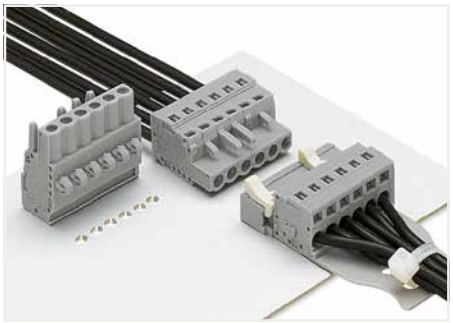

Male connector with CAGE CLAMP® and strain relief plate

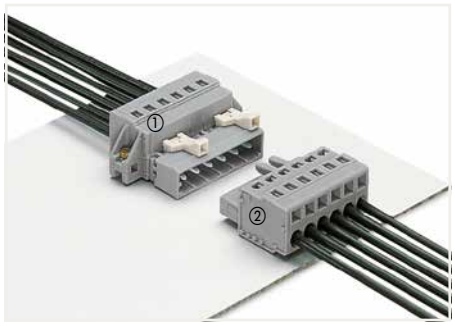

①*Male connector with mounting flanges and CAGE CLAMP®
②*Female connector with CAGE CLAMP®



①*Male connector with mounting flanges and CAGE CLAMP®
②*Angled female connector, conductor entry same direction as latches

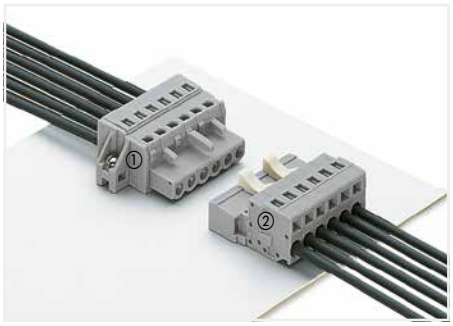

①*Female connector with mounting flanges and CAGE CLAMP®
②*Male connector with CAGE CLAMP®

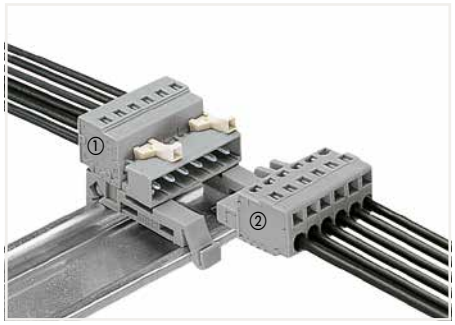

①*Male connector with snap-in mounting feet and CAGE CLAMP®, on DIN-35 rail-mount adapters**
②*Female connector with CAGE CLAMP®
For 5/5.08 mm pin spacing, starting with 3 poles
For 7.5/7.62 mm pin spacing, starting with 2 poles

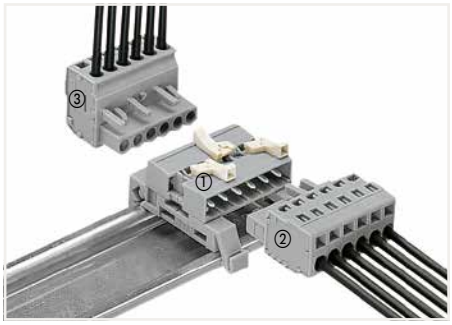

① Double-pin male connector with mounting feet, for DIN-35 rail
② Female connector with CAGE CLAMP®
③ Angled female connector with CAGE CLAMP®, conductor exit same direction as latches

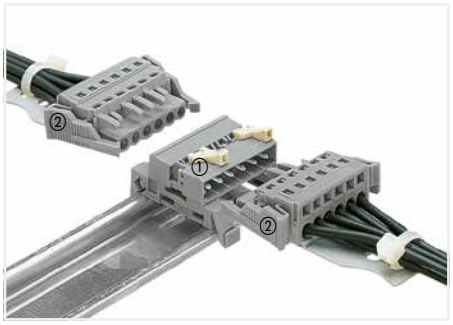

① Double-pin male connector with mounting feet, for DIN-35 rail
② Female connectors with locking levers and CAGE CLAMP®

**Distance between mounting adapters: 30 … 40 mm

*also available in version "100 % protected against mismating" (see Section 5)

Application Examples
Connectors for Front-Entry, Rail-Mount Terminal Blocks
MCS MIDI Classic



①*Male connector with straight, long contact pins
②*Female connector with CAGE CLAMP®



①*Male connectors with straight, long contact pins
②*Female connectors with CAGE CLAMP®



①*Male connector with straight, long contact pins
②*Angled female connector, conductor entry same direction as latches



①*Male connectors with straight, long contact pins
②*Angled female connector, conductor entry same direction as latches
③*Female connector with CAGE CLAMP®

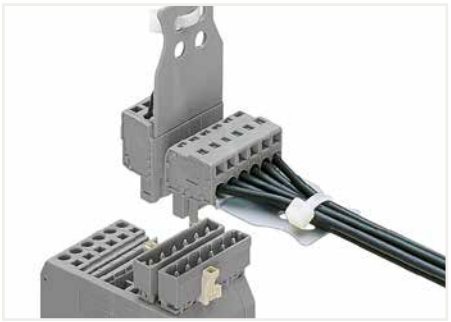

Female connector with strain relief plate
Angled female connector with strain relief plate



①*Female connector with straight, long contact pins
②*Male connector with CAGE CLAMP®

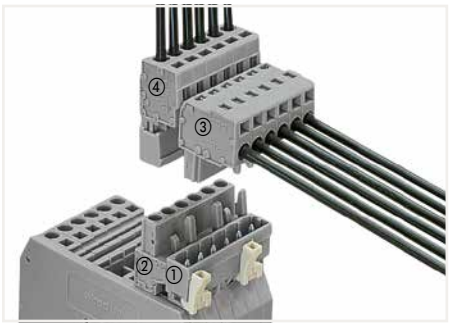

①*Male connector with straight, long contact pins
②*Female connector with straight, long contact pins
③*Angled female connector, conductor entry same direction as latches
④*Male connector with CAGE CLAMP®

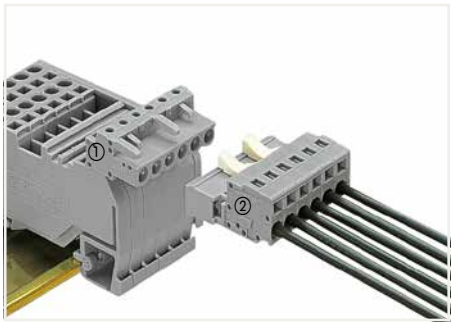

①*Female connector with angled, long contact pins
②*Male connector with CAGE CLAMP®

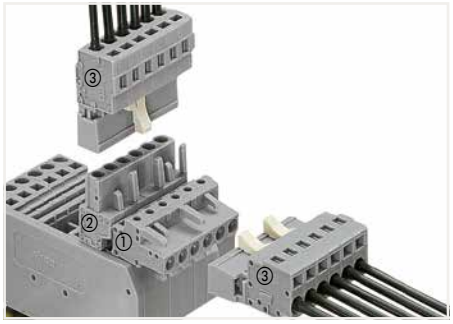

①*Female connector with angled, long contact pins
②*Female connector with straight, long contact pins
③*Male connectors with CAGE CLAMP®

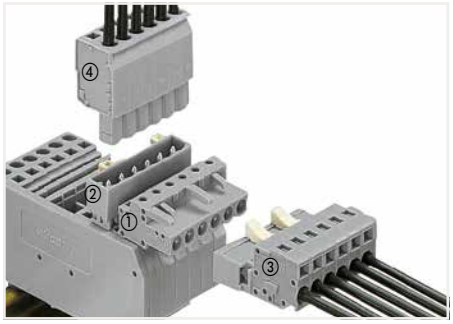

①*Female connector with angled, long contact pins
②*Male connector with straight, long contact pins
③*Male connector with CAGE CLAMP®
④*Female connector with CAGE CLAMP®



① Female connector with angled, long contact pins
② Male connector with straight, long contact pins
③ Male connector with CAGE CLAMP®
④ Angled female connector, conductor entry opposite of latches

*also available in version "100 % protected against mismating" (see Section 5)

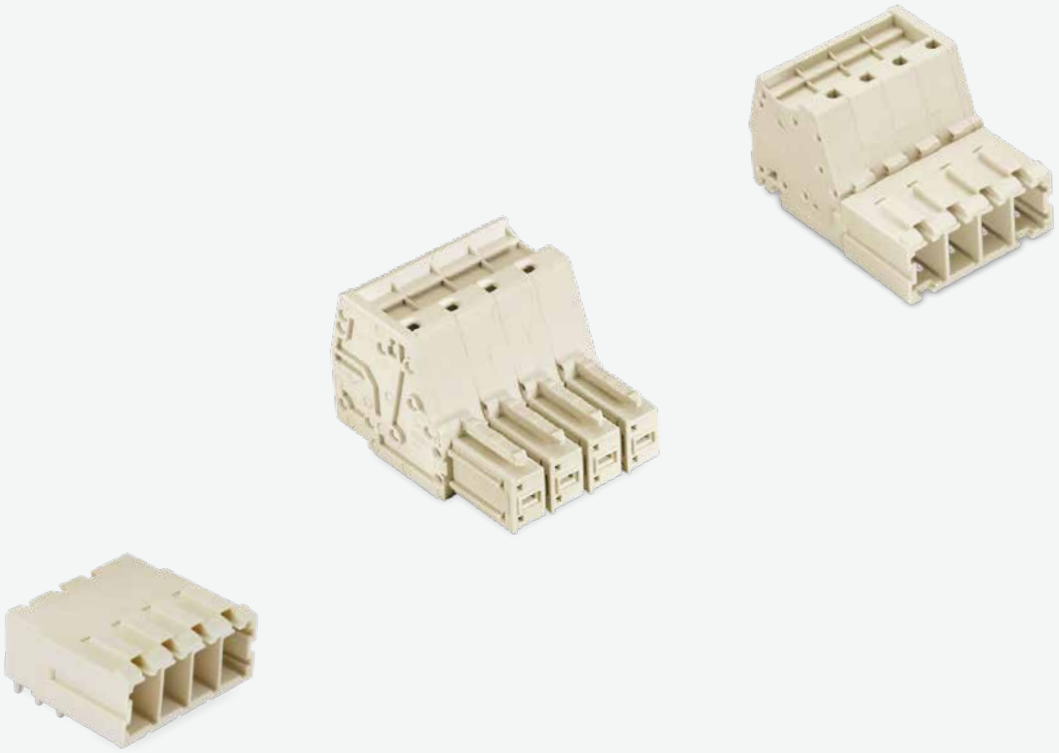

WAGO *MULTI CONNECTION SYSTEM*
MAXI

Connectors / Headers
WAGO *MULTI CONNECTION SYSTEM* MAXI 6 ▸ Pin Spacing: 7.62 mm ▸ 10 mm²
WAGO *MULTI CONNECTION SYSTEM* MAXI 16 ▸ Pin Spacing: 10.16 mm ▸ 16 mm²

		Nominal Cross-Section	Page
	*MCS* MAXI 6 1-Conductor Female Connectors ▸ Actuation type: Operating tool ▸ CAGE CLAMP®	7,62 mm	844
	*MCS* MAXI 6 1-Conductor Female Connectors ▸ Actuation type: Lever ▸ Push-in CAGE CLAMP®	7,62 mm	846
	*MCS* MAXI 6 1-Conductor Male Connectors ▸ Actuation type: Operating tool ▸ CAGE CLAMP®	7,62 mm	850
	*MCS* MAXI 6 1-Conductor Male Connectors ▸ Actuation type: Lever▸ Push-in CAGE CLAMP®	7,62 mm	840
	*MCS* MAXI 6 THT Male Headers	7,62 mm	854
	*MCS* MAXI 16 1-Conductor Female Connectors ▸ Actuation type: Lever ▸ Push-in CAGE CLAMP®	10,16 mm	860
	*MCS* MAXI 16 1-Conductor Male Connectors ▸ Actuation type: Lever▸ Push-in CAGE CLAMP®	10,16 mm	866
	*MCS* MAXI 16 THT Male Headers	10,16 mm	870
	*MCS* MAXI Accessories		858
	Accessories and Tools		1063

MCS MAXI
Description and Installation

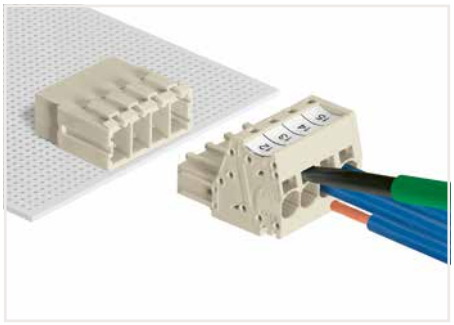

Inserting fine-stranded conductors via (5.5 x 0.8) mm screwdriver.

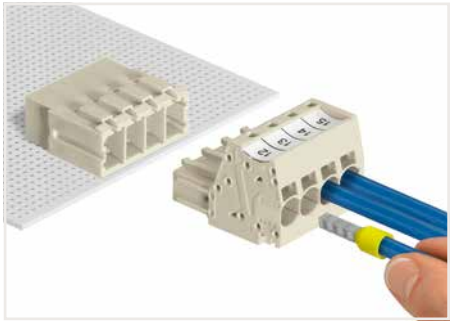

Inserting solid and ferruled conductors via push-in termination.

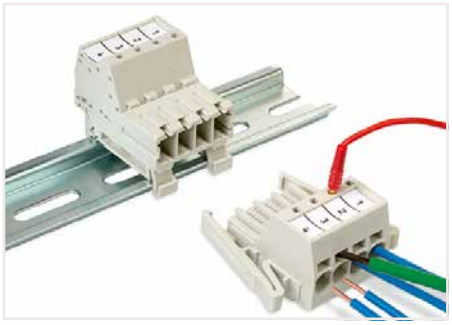

Male connector mounted on a DIN-35 rail via integrated mounting adapter.

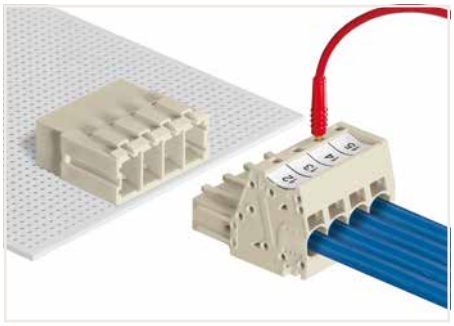

Testing with 2 mm Ø test plug.

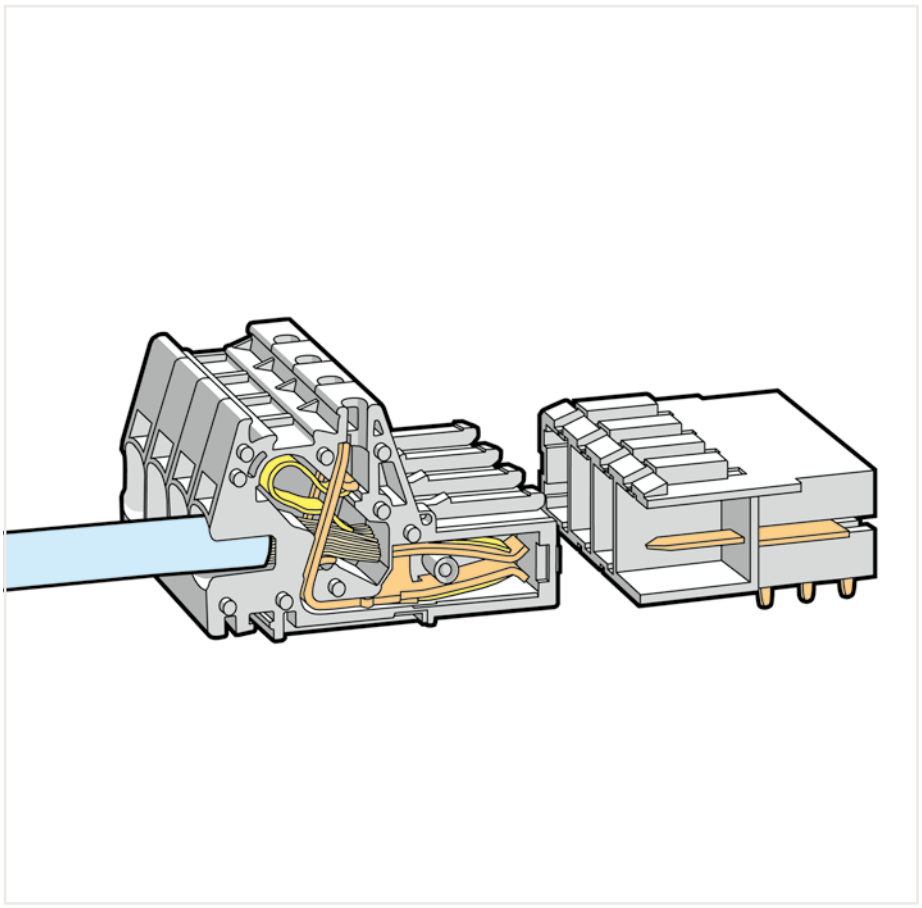

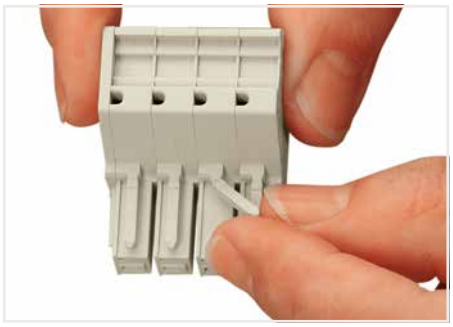

Break or cut off coding pin from female connector.

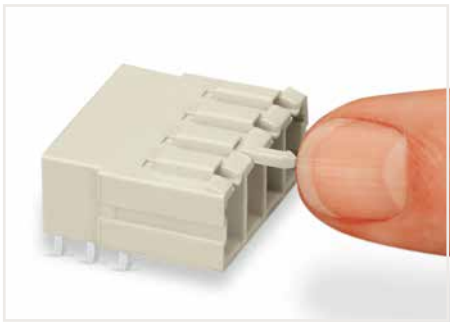

Insert coding pin into male header (break first) until it engages.



Marking via WMB or Mini-WSB marking strips.



Labeling via direct marking.

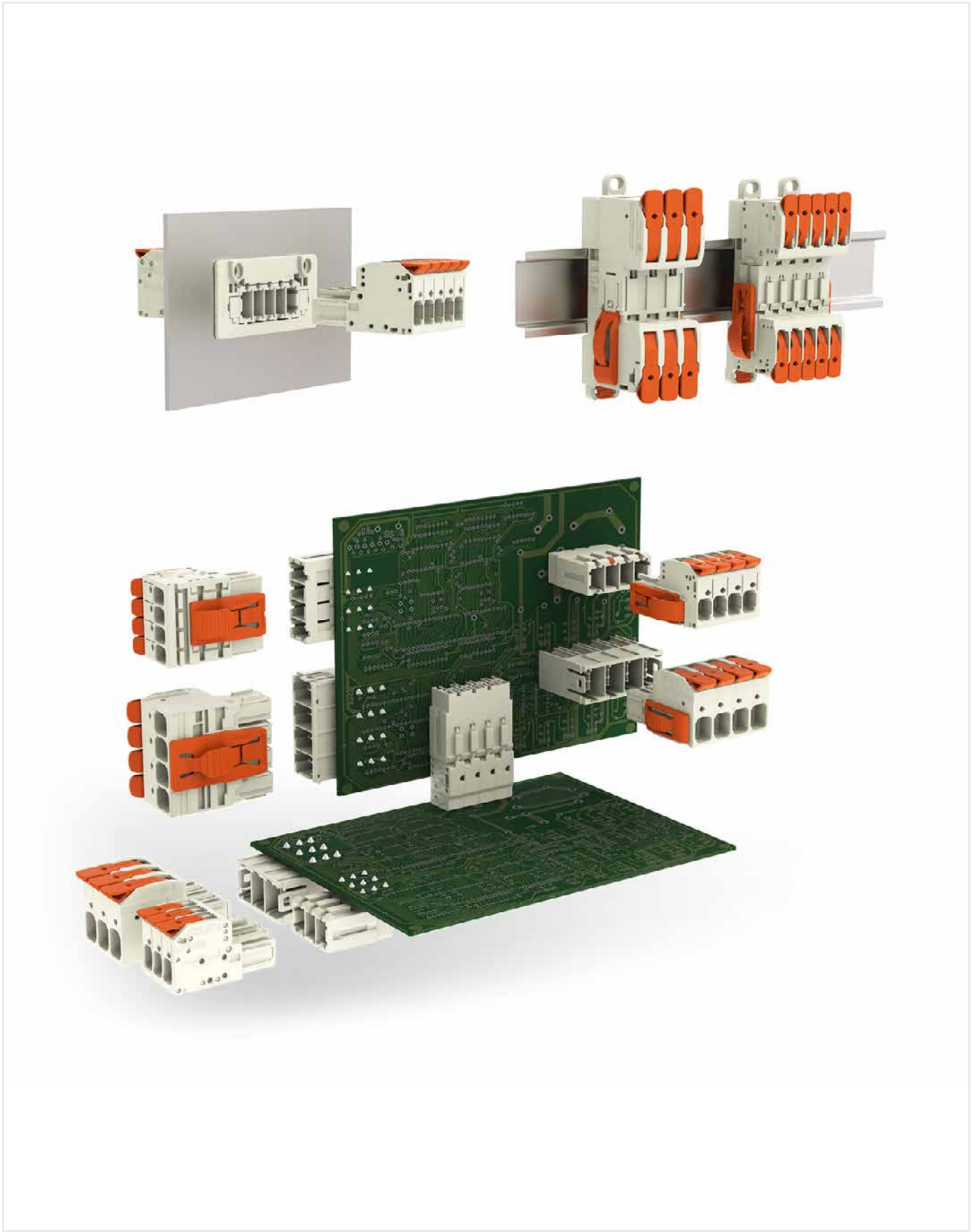

1-conductor female connector ▸ *MCS* MAXI 6 ▸ 831 Series

Pin spacing: 7.62 mm / 0.3 inches ▸ Actuation type: Operating tool ▸ Push-in CAGE CLAMP® ▸ Terminal block assembly Terminal strip, Conductor entry direction to mating direction: 0 °

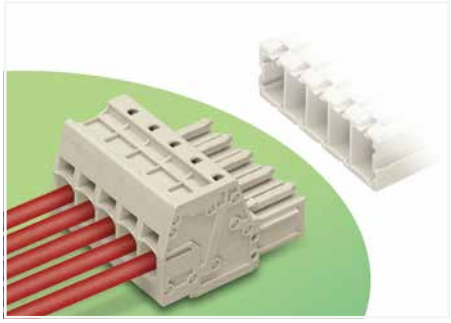

- Universal connection for all conductor types
- Push-in termination of solid or ferruled conductors
- Integrated test ports for 2 mm Ø test plugs
- 600 V UL per UL 1059
- 100 % protected against mismating
- Coding via coding fingers

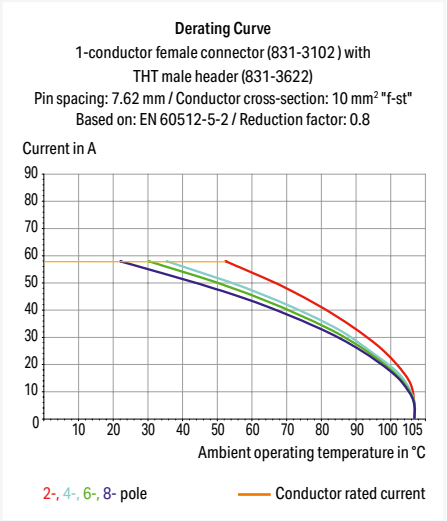

Electrical data			
Ratings per	**IEC/EN 60664-1**		
Overvoltage category	III	III	II
Pollution degree	3	2	2
Nominal voltage	800 V	1000 V	1000 V
Rated impulse withstand voltage	8 kV	8 kV	8 kV
Rated current	41 A	41 A	41 A
Approvals per	**UL 1059**		
Use group	B	C	D
Rated voltage	-	600 V	-
Rated current	-	42 A	-
Approvals per	**CSA**		
Use group	B	C	D
Rated voltage	-	600 V	-
Rated current	-	41 A	-

Connection Data	
Connection technology	Push-in CAGE CLAMP®
Strip length	13 … 15 mm / 0.51 … 0.59 inches
Solid conductor	0.5 … 10 mm² / 20 … 8 AWG
Fine-stranded conductor	0.5 … 10 mm² / 20 … 8 AWG
Fine-stranded conductor; with insulated ferrule	0.5 … 6 mm²
Fine-stranded conductor; with uninsulated ferrule	0.5 … 6 mm²

Material data	
Material group	I
Insulation material (main housing)	Polyamide (PA66)
Flammability class per UL94	V0
Clamping spring material	Chrome-nickel spring steel (CrNi)
Contact material	Electrolytic copper (E_{Cu})
Contact Plating	Tin

Environmental requirements	
Limit temperature range	-60 … +105 °C

Note:
The *MCS – MULTI CONNECTION SYSTEM* includes connectors without breaking capacity in accordance with DIN EN 61984. When used as intended, these connectors must not be connected/disconnected when live or under load.When used as intended, these connectors must not be connected/disconnected when live or under load. The circuit design should ensure header pins, which can be touched, are not live when unmated.

Ferrule	Page 1081
Marking	Page 1064
Strain relief	Page 877
Test and measurement	Page 1088
Tool	Page 1072
Direct marking	Page 872
See technical section for further information	
Approvals and corresponding ratings, visit www.wago.com	

1-conductor female connector ▸ *MCS* MAXI 6 ▸ 831 Series

Pin spacing: 7.62 mm / 0.3 inches ▸ Actuation type: Operating tool ▸ Push-in CAGE CLAMP® ▸ Terminal block assembly Terminal strip, Conductor entry direction to mating direction: 0 °

Color: light gray



831-3104

Pole number	Item No.	PU
2	831-3102	48
3	831-3103	48
4	831-3104	24
5	831-3105	24
6	831-3106	24
7	831-3107	12
8	831-3108	12
9	831-3109	12

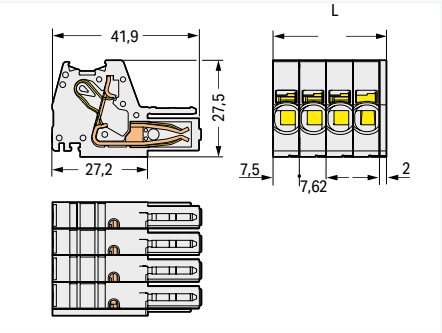

L = (pole no. – 1) x pin spacing + 9.5 mm

Locking of plug-in connection: Locking lever ▸ Color: light gray



831-3104/037-000

Pole number	Item No.	PU
2	831-3102/037-000	24
3	831-3103/037-000	24
4	831-3104/037-000	12
5	831-3105/037-000	12
6	831-3106/037-000	12
7	831-3107/037-000	12
8	831-3108/037-000	12
9	831-3109/037-000	12

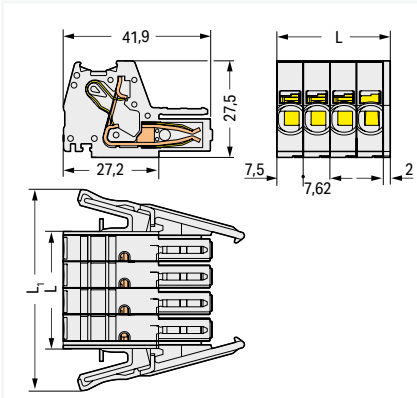

L = (pole no. – 1) x pin spacing + 10.5 mm
L_1 = L + 23.7 mm

Locking of plug-in connection: Screw flange



831-3104/107-000

Pole number	Item No.	PU
2	831-3102/107-000	24
3	831-3103/107-000	24
4	831-3104/107-000	24
5	831-3105/107-000	24
6	831-3106/107-000	12
7	831-3107/107-000	12
8	831-3108/107-000	12
9	831-3109/107-000	12

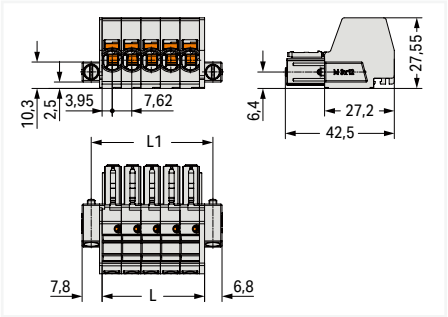

L = pole no. x pin spacing + 1.9 mm
L1 = L + 7.5 mm

10

PU = packaging unit; SPU = subpackaging unit; Dimensions in mm

Variants:
- Other pole numbers
- Other versions (or variants) can be requested from WAGO Sales or configured at https://configurator.wago.com/.

1-conductor female connector ▸ *MCS* MAXI 6 ▸ 831 Series

Pin spacing: 7.62 mm / 0.3 inches ▸ Actuation type: Lever ▸ Push-in CAGE CLAMP® ▸ Terminal block assembly Terminal strip, Conductor entry direction to mating direction: 0 ° ▸ Color: light gray



- Intuitive and tool-free lever actuation
- Universal connection for all conductor types
- Push-in termination of solid and ferruled conductors
- Test slot 0° and 90° to conductor entry
- 100% protected against mismating
- Coding option available

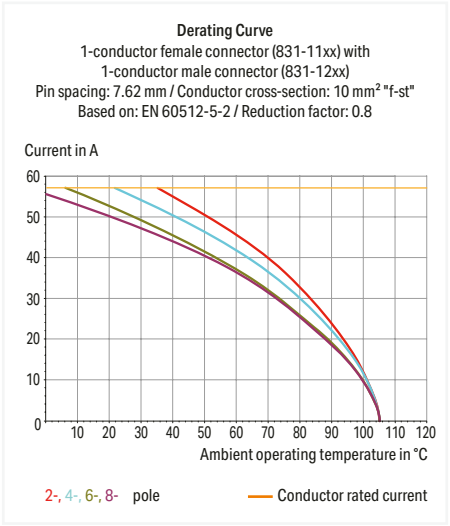

Electrical data			
Ratings per	**IEC/EN 60664-1**		
Overvoltage category	III	III	II
Pollution degree	3	2	2
Nominal voltage	800 V	1000 V	1000 V
Rated impulse withstand voltage	8 kV	8 kV	8 kV
Rated current	41 A	41 A	41 A
Approvals per	**UL 1059**		
Use group	B	C	D
Rated voltage	-	600 V	600 V
Rated current	-	37 A	5 A
Approvals per	**CSA**		
Use group	B	C	D
Rated voltage	-	600 V	600 V
Rated current	-	35 A	5 A

Connection Data	
Connection technology	Push-in CAGE CLAMP®
Strip length	11 … 13 mm / 0.43 … 0.51 inches
Solid conductor	0.5 … 10 mm² / 20 … 8 AWG
Fine-stranded conductor	0.5 … 10 mm² / 20 … 8 AWG
Fine-stranded conductor; with insulated ferrule	0.5 … 6 mm²
Fine-stranded conductor; with uninsulated ferrule	0.5 … 6 mm²

Material data	
Material group	I
Insulation material (main housing)	Polyamide (PA66)
Flammability class per UL94	V0
Clamping spring material	Chrome-nickel spring steel (CrNi)
Contact material	Electrolytic copper (E_{Cu})
Contact Plating	Tin

Environmental requirements	
Limit temperature range	-60 … +105 °C
Processing temperature	-35 … +60 °C

Note:
The *MCS – MULTI CONNECTION SYSTEM* includes connectors without breaking capacity in accordance with DIN EN 61984. When used as intended, these connectors must not be connected/disconnected when live or under load.When used as intended, these connectors must not be connected/disconnected when live or under load. The circuit design should ensure header pins, which can be touched, are not live when unmated.

Ferrule	Page 1081
Mounting adapter	Page 875
Strain relief	Page 877
See technical section for further information	
Approvals and corresponding ratings, visit www.wago.com	

1-conductor female connector ▸ *MCS* MAXI 6 ▸ 831 Series

Pin spacing: 7.62 mm / 0.3 inches ▸ Actuation type: Lever ▸ Push-in CAGE CLAMP® ▸ Terminal block assembly Terminal strip, Conductor entry direction to mating direction: 0 ° ▸ Color: light gray



831-1104

Pole number	Item No.	PU
2	831-1102	48
3	831-1103	48
4	831-1104	24
5	831-1105	24
6	831-1106	24
7	831-1107	12
8	831-1108	12
9	831-1109	12

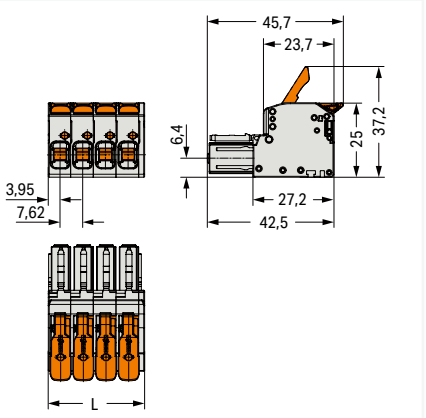

L = (pole no. x pin spacing) + 1.9 mm

Locking of plug-in connection: Locking lever



831-1104/037-000

Pole number	Item No.	PU
2	831-1102/037-000	24
3	831-1103/037-000	24
4	831-1104/037-000	12
5	831-1105/037-000	12
6	831-1106/037-000	12
7	831-1107/037-000	12
8	831-1108/037-000	12
9	831-1109/037-000	12

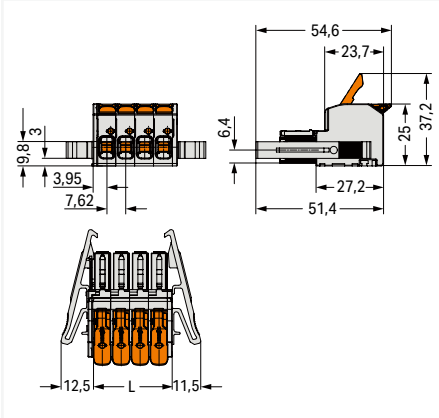

L = (pole no. x pin spacing) + 1.9 mm

Locking of plug-in connection: Lateral locking lever



831-1104/038-000

Pole number	Item No.	PU
2	831-1102/038-000	24
3	831-1103/038-000	24
4	831-1104/038-000	12
5	831-1105/038-000	12
6	831-1106/038-000	12
7	831-1107/038-000	12
8	831-1108/038-000	12
9	831-1109/038-000	12

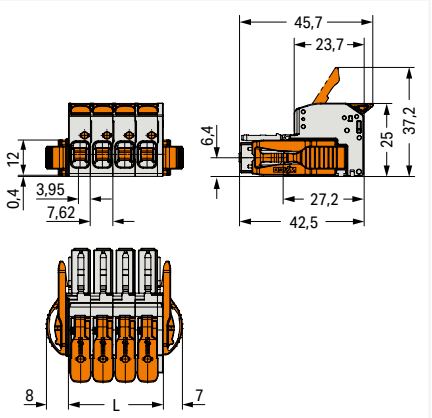

L = (pole no. x pin spacing) + 1.9 mm

PU = packaging unit; SPU = subpackaging unit; Dimensions in mm

Variants:

- Other colors
- Other versions (or variants) can be requested from WAGO Sales or configured at https://configurator.wago.com/.

1-conductor female connector ▸ *MCS* MAXI 6 ▸ 831 Series

Pin spacing: 7.62 mm / 0.3 inches ▸ Actuation type: Lever ▸ Push-in CAGE CLAMP® ▸ Terminal block assembly Terminal strip, Conductor entry direction to mating direction: 0 ° ▸ Color: light gray

Locking of plug-in connection: Center locking lever



831-1104/322-000

Pole number	Item No.	PU
2	831-1102/322-000	24
3	831-1103/322-000	24
4	831-1104/322-000	12
5	831-1105/322-000	12
6	831-1106/322-000	12
7	831-1107/322-000	6
8	831-1108/322-000	6
9	831-1109/322-000	6

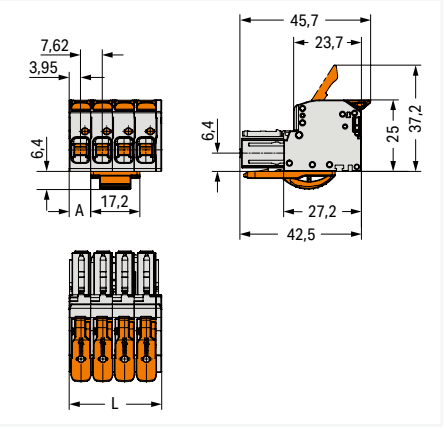

L = pole no. x pin spacing + 1.9 mm
Pole no. 2: A = 0.1 mm
Pole no. 3: A = 7.5 mm
Pole no. 4: A = 7.5 mm
Pole no. 5: A = 15.12 mm
Pole no. 6: A = 15.12 mm
Pole no. 7: A = 22.74 mm
Pole no. 8: A = 22.74 mm
Pole no. 9: A = 30.36 mm

Locking of plug-in connection: Frontal locking lever



831-1104/320-000

Pole number	Item No.	PU
3	831-1103/320-000	32
4	831-1104/320-000	24
5	831-1105/320-000	20

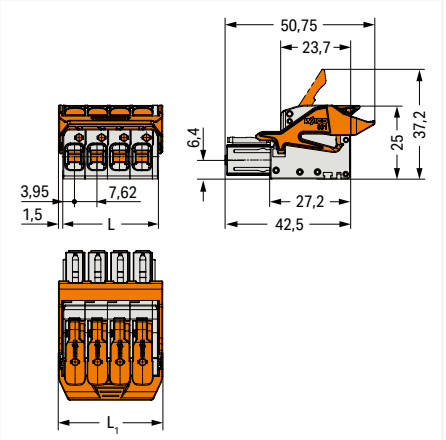

L = pole no. x pin spacing + 1.9 mm
L1 = L + 3 mm

Mounting type: DIN-35 rail; Panel mounting



831-1104/306-000

Pole number	Item No.	PU
2	831-1102/306-000	12
3	831-1103/306-000	12
4	831-1104/306-000	6
5	831-1105/306-000	6
6	831-1106/306-000	6
7	831-1107/306-000	6
8	831-1108/306-000	6
9	831-1109/306-000	6

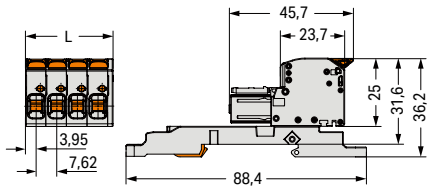

L = (pole no. x pin spacing) + 1.9 mm

10

PU = packaging unit; SPU = subpackaging unit; Dimensions in mm

Variants:
- Other colors
- Other versions (or variants) can be requested from WAGO Sales or configured at https://configurator.wago.com/.

1-conductor female connector ▸ *MCS* MAXI 6 ▸ 831 Series

Pin spacing: 7.62 mm / 0.3 inches ▸ Actuation type: Lever ▸ Push-in CAGE CLAMP® ▸ Terminal block assembly Terminal strip, Conductor entry direction to mating direction: 0 ° ▸ Color: light gray

Mounting type: DIN-35 rail; Panel mounting ▸ Locking of plug-in connection: Lateral locking lever



831-1104/038-000/306-000

Pole number	Item No.	PU
2	**831-1102/038-000/306-000**	12
3	**831-1103/038-000/306-000**	12
4	**831-1104/038-000/306-000**	6
5	**831-1105/038-000/306-000**	6
6	**831-1106/038-000/306-000**	6
7	**831-1107/038-000/306-000**	6
8	**831-1108/038-000/306-000**	6
9	**831-1109/038-000/306-000**	6

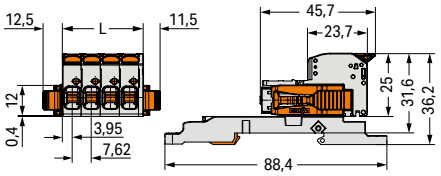

L = (pole no. x pin spacing) + 1.9 mm

10

PU = packaging unit; SPU = subpackaging unit; Dimensions in mm

Variants:
- Other colors
- Other versions (or variants) can be requested from WAGO Sales or configured at https://configurator.wago.com/.

1-conductor male connector ▸ *MCS* MAXI 6 ▸ 831 Series

Pin spacing: 7.62 mm / 0.3 inches ▸ Actuation type: Operating tool ▸ Push-in CAGE CLAMP® ▸ Terminal block assembly Terminal strip, Conductor entry direction to mating direction: 0 ° ▸ Color: light gray

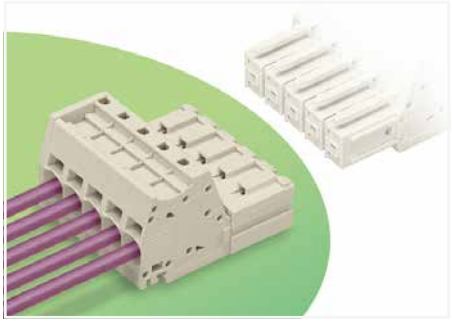

- Universal connection for all conductor types
- Push-in termination of solid or ferruled conductors
- Integrated test ports for 2 mm Ø test plugs
- 600 V UL per UL 1059
- 100 % protected against mismating
- Coding via coding fingers

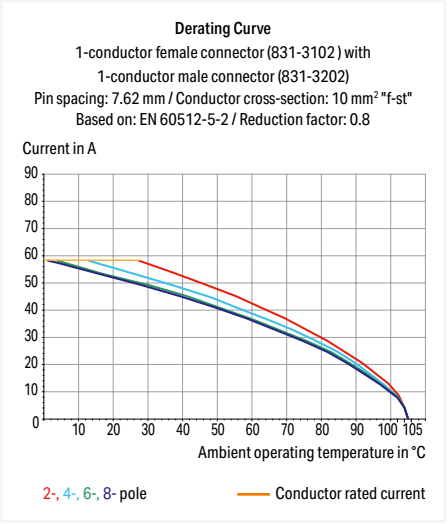

Electrical data			
Ratings per	**IEC/EN 60664-1**		
Overvoltage category	III	III	II
Pollution degree	3	2	2
Nominal voltage	800 V	1000 V	1000 V
Rated impulse withstand voltage	8 kV	8 kV	8 kV
Rated current	41 A	41 A	41 A
Approvals per	**UL 1059**		
Use group	B	C	D
Rated voltage	-	600 V	-
Rated current	-	42 A	-
Approvals per	**CSA**		
Use group	B	C	D
Rated voltage	-	600 V	-
Rated current	-	41 A	-

Connection Data	
Connection technology	Push-in CAGE CLAMP®
Strip length	13 … 15 mm / 0.51 … 0.59 inches
Solid conductor	0.5 … 10 mm² / 20 … 8 AWG
Fine-stranded conductor	0.5 … 10 mm² / 20 … 8 AWG
Fine-stranded conductor; with insulated ferrule	0.5 … 6 mm²
Fine-stranded conductor; with uninsulated ferrule	0.5 … 6 mm²

Material data	
Material group	I
Insulation material (main housing)	Polyamide (PA66)
Flammability class per UL94	V0
Clamping spring material	Chrome-nickel spring steel (CrNi)
Contact material	Electrolytic copper (E_{Cu})
Contact Plating	Tin

Environmental requirements	
Limit temperature range	-60 … +105 °C
Processing temperature	-35 … +60 °C

Note:
The *MCS – MULTI CONNECTION SYSTEM* includes connectors without breaking capacity in accordance with DIN EN 61984. When used as intended, these connectors must not be connected/disconnected when live or under load.When used as intended, these connectors must not be connected/disconnected when live or under load. The circuit design should ensure header pins, which can be touched, are not live when unmated.

Coding	Page 874
Installation	Page 876
Marking	Page 1064
Mounting adapter	Page 875
Strain relief	Page 877
Test and measurement	Page 1088
Tool	Page 1072
Direct marking	Page 872
See technical section for further information	
Approvals and corresponding ratings, visit www.wago.com	

1-conductor male connector ▸ *MCS* MAXI 6 ▸ 831 Series

Pin spacing: 7.62 mm / 0.3 inches ▸ Actuation type: Operating tool ▸ Push-in CAGE CLAMP® ▸ Terminal block assembly Terminal strip, Conductor entry direction to mating direction: 0 ° ▸ Color: light gray



831-3204

Pole number	Item No.	PU (SPU)
2	831-3202	48
3	831-3203	24
4	831-3204	24
5	831-3205	24
6	831-3206	24 (1)
7	831-3207	12
8	831-3208	12
9	831-3209	12

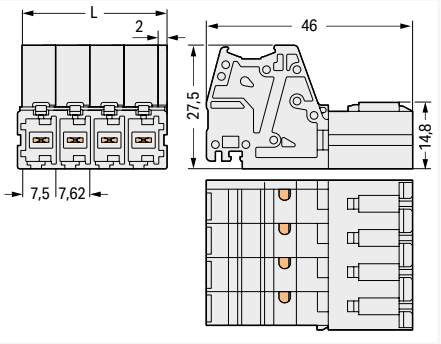

L = (pole no. – 1) x pin spacing + 9.5 mm

Locking of plug-in connection: Threaded flange



831-3204/109-000

Pole number	Item No.	PU
2	831-3202/109-000	24
3	831-3203/109-000	24
4	831-3204/109-000	24
5	831-3205/109-000	24
6	831-3206/109-000	12
7	831-3207/109-000	12
8	831-3208/109-000	12
9	831-3209/109-000	12

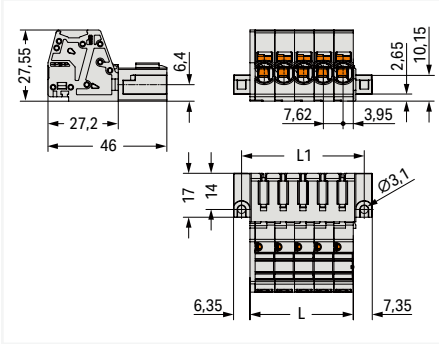

L = pole no. x pin spacing + 1.9 mm
L1 = L + 7.5 mm

Mounting type: DIN-35 rail



831-3204/007-000

Pole number	Item No.	PU
2	831-3202/007-000	48
3	831-3203/007-000	48
4	831-3204/007-000	24
5	831-3205/007-000	24
6	831-3206/007-000	24
7	831-3207/007-000	12
8	831-3208/007-000	12
9	831-3209/007-000	12

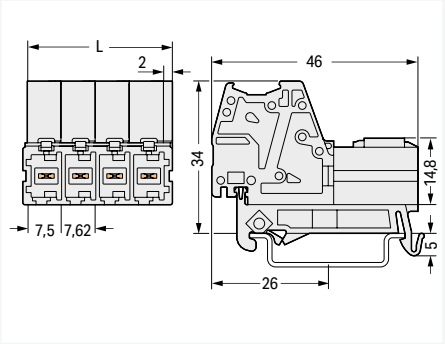

L = (pole no. – 1) x pin spacing + 9.5 mm

10

PU = packaging unit; SPU = subpackaging unit; Dimensions in mm

Variants:

- Other pole numbers
- Other versions (or variants) can be requested from WAGO Sales or configured at https://configurator.wago.com/.

1-conductor male connector ▸ *MCS* MAXI 6 ▸ 831 Series

Pin spacing: 7.62 mm / 0.3 inches ▸ Actuation type: Lever ▸ Push-in CAGE CLAMP® ▸ Terminal block assembly Terminal strip, Conductor entry direction to mating direction: 0 ° ▸ Color: light gray

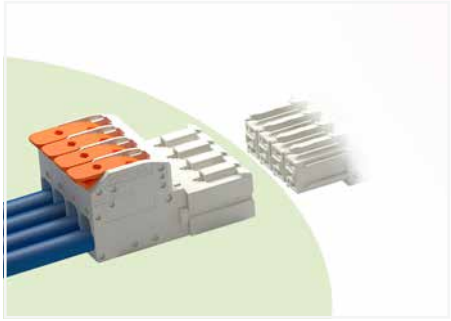

- Intuitive and tool-free lever actuation
- Universal connection for all conductor types
- Push-in termination of solid and ferruled conductors
- Test slot 0° and 90° to conductor entry
- 100% protected against mismating
- Coding option available

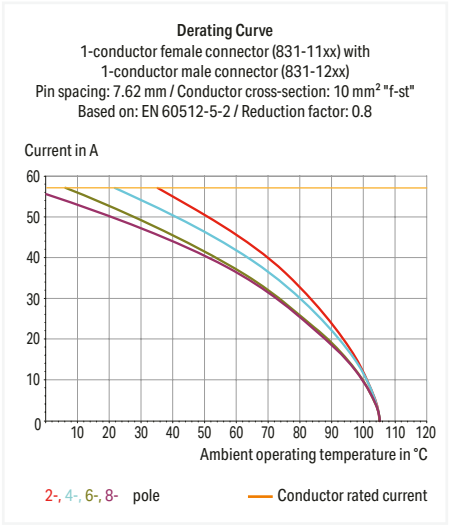

Electrical data			
Ratings per	**IEC/EN 60664-1**		
Overvoltage category	III	III	II
Pollution degree	3	2	2
Nominal voltage	800 V	1000 V	1000 V
Rated impulse withstand voltage	8 kV	8 kV	8 kV
Rated current	41 A	41 A	41 A
Approvals per	**UL 1059**		
Use group	B	C	D
Rated voltage	-	600 V	600 V
Rated current	-	37 A	5 A
Approvals per	**CSA**		
Use group	B	C	D
Rated voltage	-	600 V	600 V
Rated current	-	35 A	5 A

Connection Data	
Connection technology	Push-in CAGE CLAMP®
Strip length	11 … 13 mm / 0.43 … 0.51 inches
Solid conductor	0.5 … 10 mm² / 20 … 8 AWG
Fine-stranded conductor	0.5 … 10 mm² / 20 … 8 AWG
Fine-stranded conductor; with insulated ferrule	0.5 … 6 mm²
Fine-stranded conductor; with uninsulated ferrule	0.5 … 6 mm²

Material data	
Material group	I
Insulation material (main housing)	Polyamide (PA66)
Flammability class per UL94	V0
Clamping spring material	Chrome-nickel spring steel (CrNi)
Contact material	Electrolytic copper (E_{Cu})
Contact Plating	Tin

Environmental requirements	
Limit temperature range	-60 … +105 °C
Processing temperature	-35 … +60 °C

Note:
The *MCS – MULTI CONNECTION SYSTEM* includes connectors without breaking capacity in accordance with DIN EN 61984. When used as intended, these connectors must not be connected/disconnected when live or under load.When used as intended, these connectors must not be connected/disconnected when live or under load. The circuit design should ensure header pins, which can be touched, are not live when unmated.

Ferrule	Page 1081
Installation	Page 876
Mounting adapter	Page 875
Strain relief	Page 877
See technical section for further information	
Approvals and corresponding ratings, visit www.wago.com	

1-conductor male connector ▸ *MCS* MAXI 6 ▸ 831 Series

Pin spacing: 7.62 mm / 0.3 inches ▸ Actuation type: Lever ▸ Push-in CAGE CLAMP® ▸ Terminal block assembly Terminal strip, Conductor entry direction to mating direction: 0 ° ▸ Color: light gray



831-1204

Pole number	Item No.	PU
2	831-1202	48
3	831-1203	24
4	831-1204	24
5	831-1205	24
6	831-1206	24
7	831-1207	12
8	831-1208	12
9	831-1209	12

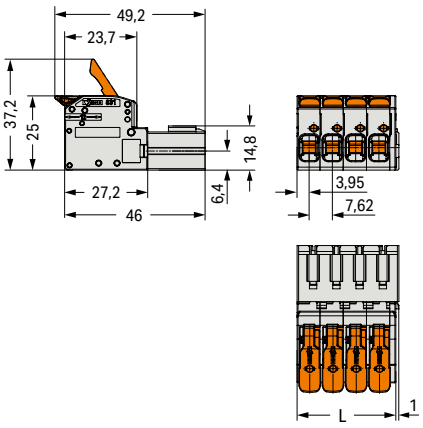

L = (pole no. x pin spacing) + 1.9 mm

Mounting type: DIN-35 rail; Panel mounting



831-1204/306-000

Pole number	Item No.	PU
2	831-1202/306-000	12
3	831-1203/306-000	12
4	831-1204/306-000	6
5	831-1205/306-000	6
6	831-1206/306-000	6
7	831-1207/306-000	6
8	831-1208/306-000	6
9	831-1209/306-000	6

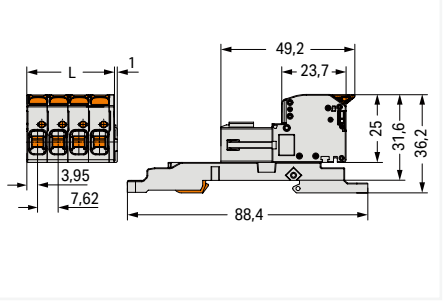

L = (pole no. x pin spacing) + 1.9 mm

PU = packaging unit; SPU = subpackaging unit; Dimensions in mm

Variants:

- Other colors
- Other versions (or variants) can be requested from WAGO Sales or configured at https://configurator.wago.com/.

THT female header ▸ *MCS* MAXI 6 ▸ 831 Series

Pin spacing: 7.62 mm / 0.3 inches ▸ Solder pin dimensions: 1 x 1.2 mm ▸ Terminal block assembly Terminal strip, Color: light gray

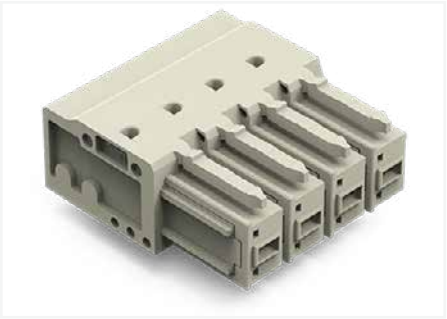

- Female headers may be mounted horizontally or vertically via straight or angled solder pins
- Three solder pins per pole provide high electrical and mechanical stability
- 100% protected against mismating
- Coding option available

Electrical data			
Ratings per	**IEC/EN 60664-1**		
Overvoltage category	III	III	II
Pollution degree	3	2	2
Nominal voltage	500 V	630 V	1000 V
Rated impulse withstand voltage	6 kV	6 kV	6 kV
Rated current	41 A	41 A	41 A

Material data	
Material group	I
Insulation material (main housing)	Polyamide (PA66)
Flammability class per UL94	V0
Contact material	Electrolytic copper (E_{Cu})
Contact Plating	Tin

Mechanical data	
Solder pin arrangement	over the entire female connector (in-line)
Solder pin length	4 mm
Solder pin dimensions	1 x 1.2 mm
Drilled hole diameter	1.7 $^{(+0.1)}$ mm

Environmental requirements	
Limit temperature range	-60 … +105 °C
Processing temperature	-35 … +60 °C

10

Note:
The *MCS – MULTI CONNECTION SYSTEM* includes connectors without breaking capacity in accordance with DIN EN 61984. When used as intended, these connectors must not be connected/disconnected when live or under load.When used as intended, these connectors must not be connected/disconnected when live or under load. The circuit design should ensure header pins, which can be touched, are not live when unmated.

See technical section for further information

Approvals and corresponding ratings, visit www.wago.com

THT female header ▸ *MCS* MAXI 6 ▸ 831 Series

Pin spacing: 7.62 mm / 0.3 inches ▸ Solder pin dimensions: 1 x 1.2 mm ▸ Terminal block assembly Terminal strip, Color: light gray

Mating direction to the PCB: 0 °



831-3524

Pole number	Item No.	PU
2	831-3522	48
3	831-3523	24
4	831-3524	24
5	831-3525	24
6	831-3526	24
7	831-3527	12
8	831-3528	12
9	831-3529	12

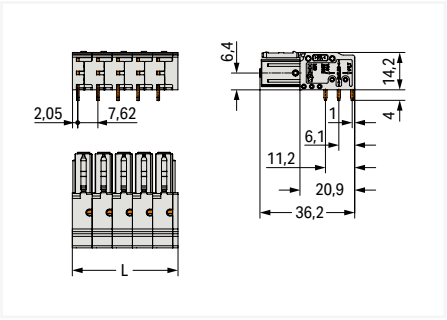

L = (pole no. x pin spacing) + 1.9 mm

Mating direction to the PCB: 90 °



831-3504

Pole number	Item No.	PU
2	831-3502	48
3	831-3503	24
4	831-3504	24
5	831-3505	24
6	831-3506	24
7	831-3507	12
8	831-3508	12
9	831-3509	12

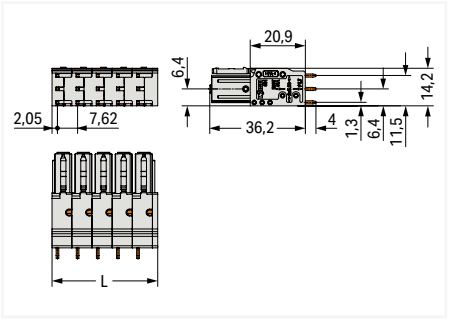

L = (pole no. x pin spacing) + 1.9 mm

10

PU = packaging unit; SPU = subpackaging unit; Dimensions in mm

THT male header ▸ *MCS* MAXI 6 ▸ 831 Series

Pin spacing: 7.62 mm / 0.3 inches ▸ Solder pin dimensions: 1 x 1.2 mm ▸ Terminal block assembly Terminal strip, Color: light gray

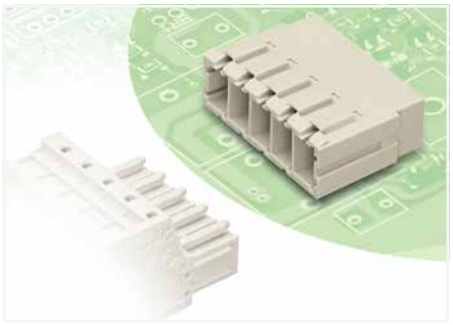

- Male headers may be mounted horizontally or vertically via straight or angled solder pins
- Three solder pins per pole provide high electrical and mechanical stability
- 100 % protected against mismating
- Coding via coding fingers

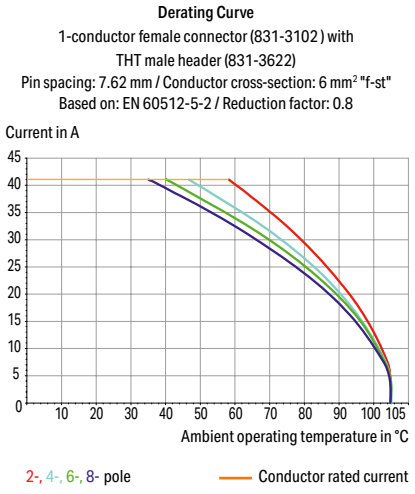

Electrical data			
Ratings per	**IEC/EN 60664-1**		
Overvoltage category	III	III	II
Pollution degree	3	2	2
Nominal voltage	500 V	630 V	1000 V
Rated impulse withstand voltage	6 kV	6 kV	6 kV
Rated current	41 A	41 A	41 A
Approvals per	**UL 1059**		
Use group	B	C	D
Rated voltage	-	300 V	600 V
Rated current	-	42 A	5 A
Approvals per	**CSA**		
Use group	B	C	D
Rated voltage	-	300 V	600 V
Rated current	-	41 A	5 A

Material data	
Material group	I
Insulation material (main housing)	Polyamide (PA66)
Flammability class per UL94	V0
Contact material	Electrolytic copper (E_{Cu})
Contact Plating	Tin

Mechanical data	
Solder pin arrangement	over the entire male connector (in-line)
Number of solder pins per potential	3
Solder pin length	4 mm
Solder pin dimensions	1 x 1.2 mm
Drilled hole diameter	1.7 $^{(+0.1)}$ mm

Environmental requirements	
Limit temperature range	-60 … +105 °C
Processing temperature	-35 … +60 °C

Note:
The *MCS – MULTI CONNECTION SYSTEM* includes connectors without breaking capacity in accordance with DIN EN 61984. When used as intended, these connectors must not be connected/disconnected when live or under load.When used as intended, these connectors must not be connected/disconnected when live or under load. The circuit design should ensure header pins, which can be touched, are not live when unmated.

Coding Page 874

See technical section for further information

Approvals and corresponding ratings, visit www.wago.com

THT male header ▸ *MCS* MAXI 6 ▸ 831 Series

Pin spacing: 7.62 mm / 0.3 inches ▸ Solder pin dimensions: 1 x 1.2 mm ▸ Terminal block assembly Terminal strip, Color: light gray

Mating direction to the PCB: 0 °



831-3624

Pole number	Item No.	PU
2	831-3622	48
3	831-3623	48
4	831-3624	24
5	831-3625	24
6	831-3626	24
7	831-3627	12
8	831-3628	12
9	831-3629	12

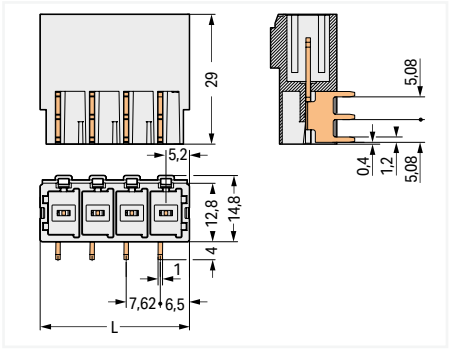

L = (pole no. – 1) x pin spacing + 10.5 mm

Mating direction to the PCB: 180 °

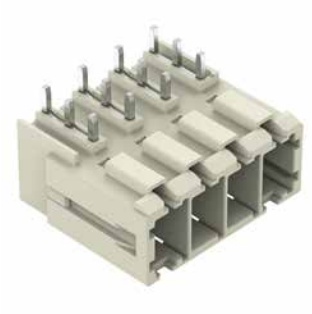

831-3644

Pole number	Item No.	PU
2	831-3642	48
3	831-3643	48
4	831-3644	24
5	831-3645	24
6	831-3646	24
7	831-3647	12
8	831-3648	12
9	831-3649	12

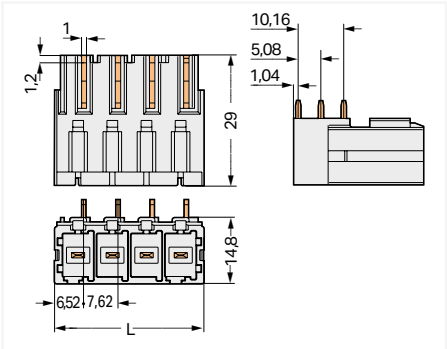

L = (pole no. – 1) x pin spacing + 10.5 mm

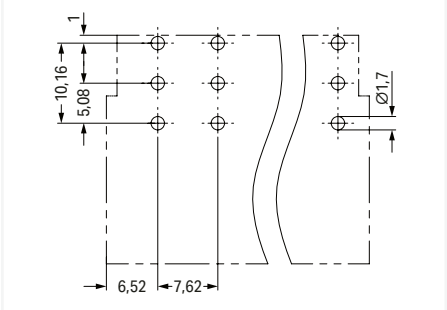

Mating direction to the PCB: 90 °

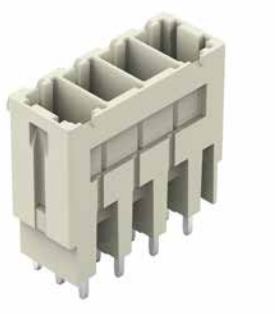

831-3604

Pole number	Item No.	PU
2	831-3602	48
3	831-3603	48
4	831-3604	24
5	831-3605	24
6	831-3606	24
7	831-3607	12
8	831-3608	12
9	831-3609	12

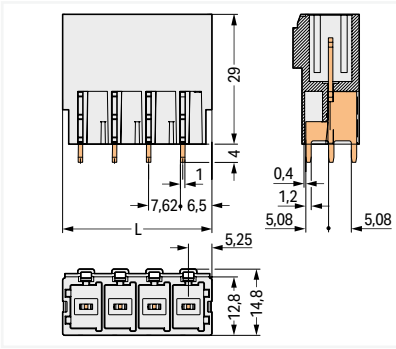

L = (pole no. – 1) x pin spacing + 10.5 mm

PU = packaging unit; SPU = subpackaging unit; Dimensions in mm

Variants:

- Other pole numbers
- Protection against PCB mounting errors
- Other versions (or variants) can be requested from WAGO Sales or configured at https://configurator.wago.com/.

THT male header ▸ *MCS* MAXI 6 ▸ 831 Series

Pin spacing: 7.62 mm / 0.3 inches ▸ Solder pin dimensions: 1 x 1.2 mm ▸ Terminal block assembly Terminal strip, Color: light gray

Locking of plug-in connection: Threaded flange ▸ Mating direction to the PCB: 0 °



831-3624/108-000

Pole number	Item No.	PU
2	831-3622/108-000	48
3	831-3623/108-000	24
4	831-3624/108-000	24
5	831-3625/108-000	24
6	831-3626/108-000	24
7	831-3627/108-000	12
8	831-3628/108-000	12
9	831-3629/108-000	12

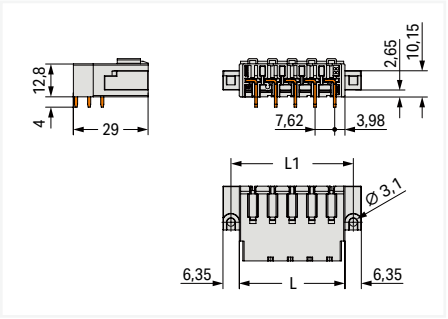

L = pole no. x pin spacing + 2.9 mm
L1 = L + 6.5 mm

Locking of plug-in connection: Threaded flange ▸ Mating direction to the PCB: 90 °



831-3604/108-000

Pole number	Item No.	PU
2	831-3602/108-000	48
3	831-3603/108-000	24
4	831-3604/108-000	24
5	831-3605/108-000	24
6	831-3606/108-000	24
7	831-3607/108-000	12
8	831-3608/108-000	12
9	831-3609/108-000	12

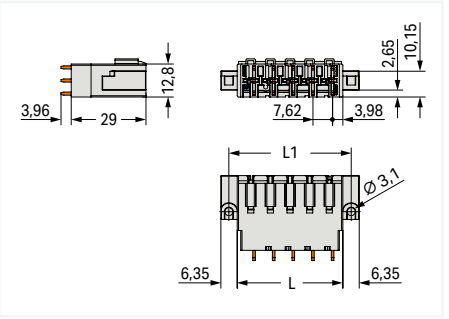

L = pole no. x pin spacing + 2.9 mm
L1 = L + 6.5 mm

PU = packaging unit; SPU = subpackaging unit; Dimensions in mm

Variants:
- Other pole numbers
- Protection against PCB mounting errors
- Other versions (or variants) can be requested from WAGO Sales or configured at https://configurator.wago.com/.

1-conductor female connector ▸ *MCS* MAXI 16 ▸ 832 Series

Pin spacing: 10.16 mm / 0.4 inches ▸ Actuation type: Lever ▸ Push-in CAGE CLAMP® ▸ Conductor entry direction to mating direction: 0 ° ▸ Color: light gray

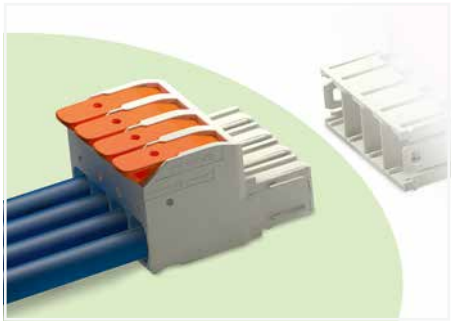

- Intuitive and tool-free lever actuation
- Universal connection for all conductor types
- Push-in termination of solid or ferruled conductors
- Test slot 0° and 90° to conductor entry
- 100% protected against mismating
- Coding option available

Derating Curve
1-conductor female connector (832-1102) with
THT male header (832-3622)
Pin spacing: 10.16 mm / Conductor cross-section: 25 mm² "f-st"
Based on: EN 60512-5-2 / Reduction factor: 0.8

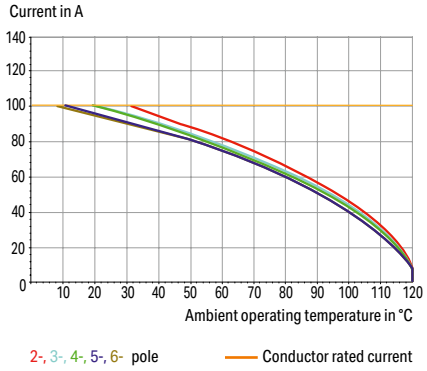

Electrical data						
Terminal block assembly	**Modular terminal block; Terminal strip**			**Terminal strip**		
Montageart				**DIN-35 rail; Panel mounting**		
Ratings per	**IEC/EN 60664-1**			**IEC/EN 60664-1**		
Overvoltage category	III	III	II	III	III	II
Pollution degree	3	2	2	3	2	2
Nominal voltage	1000 V	1000 V	1000 V	1000 V	1000 V	1000 V
Rated impulse withstand voltage	8 kV	8 kV	8 kV	8 kV	8 kV	8 kV
Rated current	76 A	76 A	76 A	76 A	76 A	76 A
Approvals per	**UL 1059**			**UL 1059**		
Use group	B	C	D	B	C	D
Rated voltage	600 V	600 V	-	600 V	600 V	-
Rated current	66 A	66 A	-	66 A	66 A	-
Ratings				**UL 1977**		
Approvals per	UL 1977			600 V		
Rated voltage	600 V			85 A		
Rated current	85 A					
Approvals per	**CSA**			**CSA**		
Use group	B	C	D	B	C	D
Rated voltage	600 V	600 V	-	600 V	600 V	-
Rated current	66 A	66 A	-	66 A	66 A	-

Connection Data	
Connection technology	Push-in CAGE CLAMP®
Strip length	18 … 20 mm / 0.71 … 0.79 inches
Solid conductor	0.75 … 16 mm² / 18 … 4 AWG
Fine-stranded conductor	0.75 … 25 mm² / 18 … 4 AWG
Fine-stranded conductor; with insulated ferrule	0.75 … 16 mm²
Fine-stranded conductor; with uninsulated ferrule	0.75 … 16 mm²

Material data	
Insulation material (main housing)	Polybutylene terephthalate (PBT)
Clamping spring material	Chrome-nickel spring steel (CrNi)
Contact material	Electrolytic copper (E_{Cu})
Contact Plating	Silver

Environmental requirements	
Limit temperature range	-60 … +120 °C

Note:
The *MCS – MULTI CONNECTION SYSTEM* includes connectors without breaking capacity in accordance with DIN EN 61984. When used as intended, these connectors must not be connected/disconnected when live or under load.When used as intended, these connectors must not be connected/disconnected when live or under load. The circuit design should ensure header pins, which can be touched, are not live when unmated.

Coding	Page 878
Ferrule	Page 1081
Locking system	Page 881
Mounting adapter	Page 879
Strain relief	Page 880
See technical section for further information	
Approvals and corresponding ratings, visit www.wago.com	

1-conductor female connector ▸ *MCS* MAXI 16 ▸ 832 Series

Pin spacing: 10.16 mm / 0.4 inches ▸ Actuation type: Lever ▸ Push-in CAGE CLAMP® ▸ Conductor entry direction to mating direction: 0 ° ▸ Color: light gray

Terminal block assembly Modular terminal block

Locking of plug-in connection: Lateral locking lever



832-1101/011-000

Pole number	Item No.	PU
1	832-1101/011-000	24

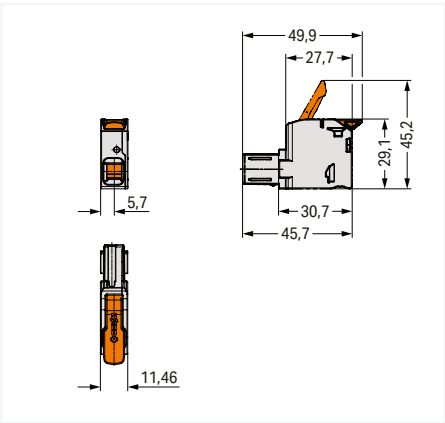



832-1101/011-000/037-000

Pole number	Item No.	PU
1	832-1101/011-000/037-000	24

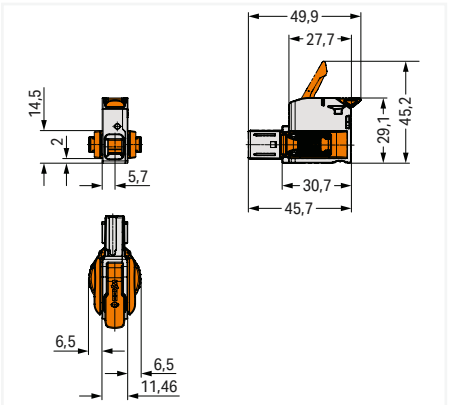

PU = packaging unit; SPU = subpackaging unit; Dimensions in mm

Variants:

- Other pole numbers
- Other versions (or variants) can be requested from WAGO Sales or configured at https://configurator.wago.com/.

1-conductor female connector ▸ *MCS* MAXI 16 ▸ 832 Series

Pin spacing: 10.16 mm / 0.4 inches ▸ Actuation type: Lever ▸ Push-in CAGE CLAMP® ▸ Conductor entry direction to mating direction: 0 ° ▸ Color: light gray

Terminal block assembly Terminal strip

	Locking of plug-in connection: Lateral locking lever	Locking of plug-in connection: Center locking lever



832-1104

Pole number	Item No.	PU
2	832-1102	24
3	832-1103	24
4	832-1104	12
5	832-1105	12
6	832-1106	12

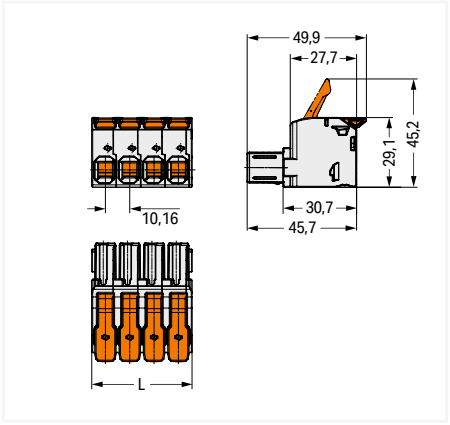

L = (pole no. x pin spacing) + 1.3 mm



832-1104/037-000

Pole number	Item No.	PU (SPU)
2	832-1102/037-000	24
3	832-1103/037-000	12
4	832-1104/037-000	12 (5)
5	832-1105/037-000	12
6	832-1106/037-000	12

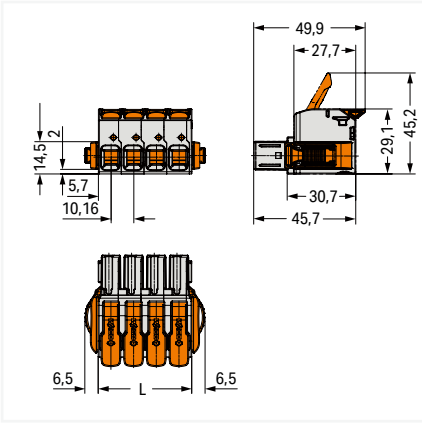

L = (pole no. x pin spacing) + 1.3 mm



832-1104/322-000

Pole number	Item No.	PU
2	832-1102/322-000	20
3	832-1103/323-000	15
4	832-1104/322-000	10
5	832-1105/323-000	10
6	832-1106/322-000	5

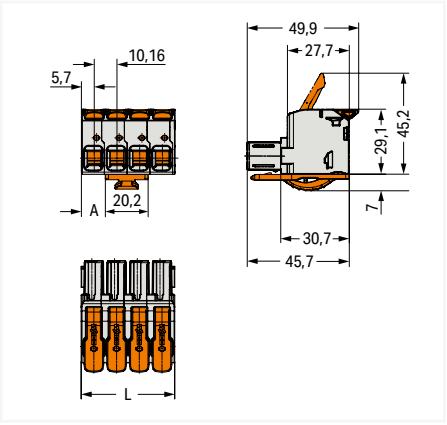

L = pole no. x pin spacing + 1.3 mm
Pole no. 2: A = 0.68 mm
Pole no. 3: A = 5.76 mm
Pole no. 4: A = 10.84 mm
Pole no. 5: A = 15.92 mm
Pole no. 6: A = 21 mm

PU = packaging unit; SPU = subpackaging unit; Dimensions in mm

Variants:
- Other pole numbers
- Other versions (or variants) can be requested from WAGO Sales or configured at https://configurator.wago.com/.

1-conductor female connector ▸ *MCS* MAXI 16 ▸ 832 Series

Pin spacing: 10.16 mm / 0.4 inches ▸ Actuation type: Lever ▸ Push-in CAGE CLAMP® ▸ Conductor entry direction to mating direction: 0 ° ▸ Color: light gray

Terminal block assembly Terminal strip

Locking of plug-in connection: Frontal locking lever



832-1104/320-000

Pole number	Item No.	PU
2	832-1102/320-000	24
3	832-1103/320-000	24
4	832-1104/320-000	12
5	832-1105/320-000	12
6	832-1106/320-000	12

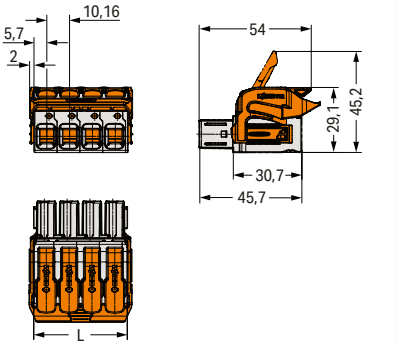

L = (pole no. x pin spacing) + 1.3 mm

Mounting type: DIN-35 rail; Panel mounting



832-1104/306-000

Pole number	Item No.	PU
2	832-1102/306-000	5
3	832-1103/306-000	5
4	832-1104/306-000	5
5	832-1105/306-000	5
6	832-1106/306-000	5

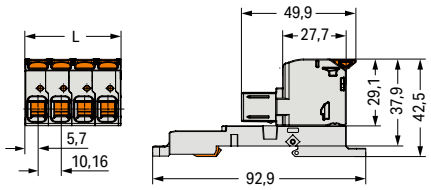

L = (pole no. x pin spacing) + 1.3 mm

Mounting type: DIN-35 rail; Panel mounting ▸ Locking of plug-in connection: Lateral locking lever



832-1104/037-000/306-000

Pole number	Item No.	PU
2	832-1102/037-000/306-000	5
3	832-1103/037-000/306-000	5
4	832-1104/037-000/306-000	5
5	832-1105/037-000/306-000	5
6	832-1106/037-000/306-000	5

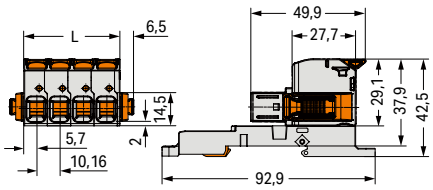

L = (pole no. x pin spacing) + 1.3 mm

10

PU = packaging unit; SPU = subpackaging unit; Dimensions in mm

Variants:

- Other pole numbers
- Other versions (or variants) can be requested from WAGO Sales or configured at https://configurator.wago.com/.

1-conductor female connector ▸ *MCS* MAXI 16 ▸ 832 Series

Pin spacing: 10.16 mm / 0.4 inches ▸ Actuation type: Lever ▸ Push-in CAGE CLAMP® ▸ Conductor entry direction to mating direction: 0 ° ▸ Color: light gray



Insert fine-stranded conductors – and remove all conductors – via operating tool.



Fine-stranded wires, connected

1-conductor male connector ▸ *MCS* MAXI 16 ▸ 832 Series

Pin spacing: 10.16 mm / 0.4 inches ▸ Actuation type: Lever ▸ Push-in CAGE CLAMP® ▸ Conductor entry direction to mating direction: 0 ° ▸ Color: light gray

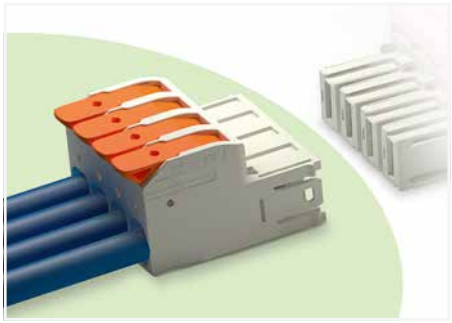

- Intuitive and tool-free lever actuation
- Universal connection for all conductor types
- Push-in termination of solid or ferruled conductors
- Test slot 0° and 90° to conductor entry
- 100% protected against mismating
- Coding option available

Derating Curve
1-conductor female connector (832-1102) with
1-conductor male connector (832-1202)
Pin spacing: 10.16 mm / Conductor cross-section: 25 mm² "f-st"
Based on: EN 60512-5-2 / Reduction factor: 0.8

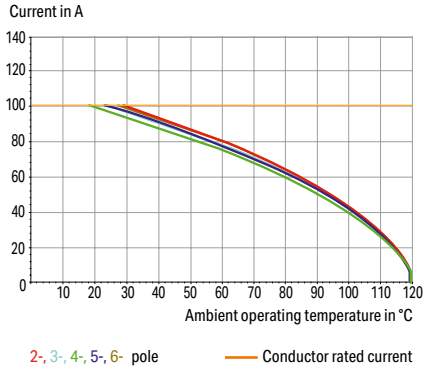

Electrical data						
Terminal block assembly	**Modular terminal block; Terminal strip**			**Terminal strip**		
Mounting type				**DIN-35 rail; Panel mounting**		
Ratings per	**IEC/EN 60664-1**			**IEC/EN 60664-1**		
Overvoltage category	III	III	II	III	III	II
Pollution degree	3	2	2	3	2	2
Nominal voltage	1000 V	1000 V	1000 V	1000 V	1000 V	1000 V
Rated impulse withstand voltage	8 kV	8 kV	8 kV	8 kV	8 kV	8 kV
Rated current	76 A	76 A	76 A	76 A	76 A	76 A
Approvals per	**UL 1059**			**UL 1059**		
Use group	B	C	D	B	C	D
Rated voltage	600 V	600 V	-	600 V	600 V	-
Rated current	66 A	66 A	-	66 A	66 A	-
Ratings				**UL 1977**		
Approvals per	UL 1977			600 V		
Rated voltage	600 V			85 A		
Rated current	85 A					
Approvals per	**CSA**			**CSA**		
Use group	B	C	D	B	C	D
Rated voltage	600 V	600 V	-	600 V	600 V	-
Rated current	66 A	66 A	-	66 A	66 A	-

Connection Data	
Connection technology	Push-in CAGE CLAMP®
Strip length	18 … 20 mm / 0.71 … 0.79 inches
Solid conductor	0.75 … 16 mm² / 18 … 4 AWG
Fine-stranded conductor	0.75 … 25 mm² / 18 … 4 AWG
Fine-stranded conductor; with insulated ferrule	0.75 … 16 mm²
Fine-stranded conductor; with uninsulated ferrule	0.75 … 16 mm²

Material data	
Clamping spring material	Chrome-nickel spring steel (CrNi)
Contact material	Electrolytic copper (E_{Cu})
Contact Plating	Silver

Environmental requirements	
Limit temperature range	-60 … +120 °C

Note:
The *MCS – MULTI CONNECTION SYSTEM* includes connectors without breaking capacity in accordance with DIN EN 61984. When used as intended, these connectors must not be connected/disconnected when live or under load.When used as intended, these connectors must not be connected/disconnected when live or under load. The circuit design should ensure header pins, which can be touched, are not live when unmated.

Coding	Page 878
Ferrule	Page 1081
Strain relief	Page 880
See technical section for further information	
Approvals and corresponding ratings, visit www.wago.com	

1-conductor male connector ▸ *MCS* MAXI 16 ▸ 832 Series

Pin spacing: 10.16 mm / 0.4 inches ▸ Actuation type: Lever ▸ Push-in CAGE CLAMP® ▸ Conductor entry direction to mating direction: 0 ° ▸ Color: light gray

Terminal block assembly Modular terminal block



832-1201/011-000

Pole number	Item No.	PU
1	832-1201/011-000	24

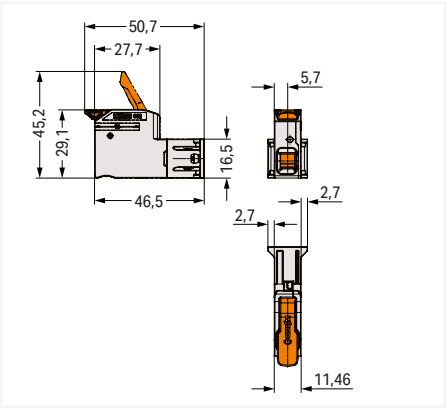

PU = packaging unit; SPU = subpackaging unit; Dimensions in mm

Variants:
- Other pole numbers
- Other versions (or variants) can be requested from WAGO Sales or configured at https://configurator.wago.com/.

1-conductor male connector ▸ *MCS* MAXI 16 ▸ 832 Series

Pin spacing: 10.16 mm / 0.4 inches ▸ Actuation type: Lever ▸ Push-in CAGE CLAMP® ▸ Conductor entry direction to mating direction: 0 ° ▸ Color: light gray

Terminal block assembly Terminal strip

Mounting type: DIN-35 rail; Panel mounting



832-1204

Pole number	Item No.	PU
2	**832-1202**	60
3	**832-1203**	45
4	**832-1204**	20
5	**832-1205**	20
6	**832-1206**	12

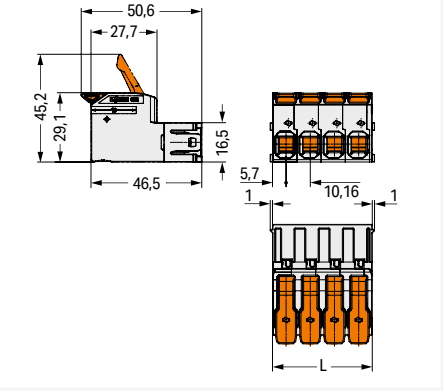

L = (pole no. x pin spacing) + 1.3 mm



832-1204/306-000

Pole number	Item No.	PU
2	**832-1202/306-000**	10
3	**832-1203/306-000**	5
4	**832-1204/306-000**	5
5	**832-1205/306-000**	5
6	**832-1206/306-000**	5

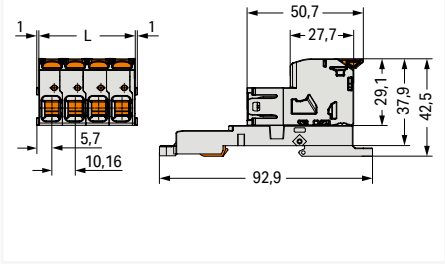

L = (pole no. x pin spacing) + 1.3 mm



Fine-stranded wires, connected



Insert fine-stranded conductors – and remove all conductors – via operating tool.

10

PU = packaging unit; SPU = subpackaging unit; Dimensions in mm

Variants:

- Other pole numbers
- Other versions (or variants) can be requested from WAGO Sales or configured at https://configurator.wago.com/.

THT male header ▸ *MCS* MAXI 16 ▸ 832 Series

Pin spacing: 10.16 mm / 0.4 inches ▸ Solder pin dimensions: 1.2 x 1.2 mm ▸ Terminal block assembly Terminal strip, Color: light gray

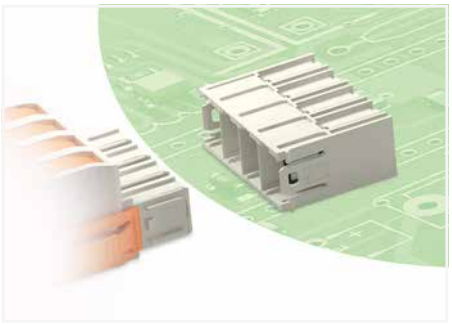

- Male header may be mounted horizontally or vertically via straight or angled solder pins
- Three solder pins per pole provide high electrical and mechanical stability
- Mating face (IP2XB) with higher protection against accidental contact
- 100% protected against mismating
- Coding via coding fingers

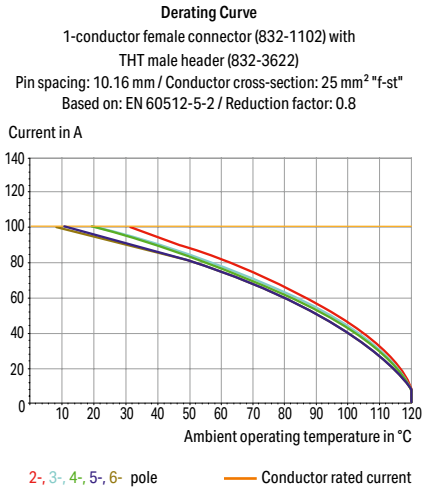

Electrical data			
Ratings per	**IEC/EN 60664-1**		
Overvoltage category	III	III	II
Pollution degree	3	2	2
Nominal voltage	800 V	1000 V	1000 V
Rated impulse withstand voltage	8 kV	8 kV	8 kV
Rated current	76 A	76 A	76 A
Approvals per	**UL 1059**		
Use group	B	C	D
Rated voltage	300 V	300 V	600 V
Rated current	66 A	66 A	5 A
Approvals per	**CSA**		
Use group	B	C	D
Rated voltage	300 V	300 V	600 V
Rated current	66 A	66 A	5 A

Material data	
Material group	I
Insulation material (main housing)	Polybutylene terephthalate (PBT)
Flammability class per UL94	V0
Contact material	Electrolytic copper (E_{Cu})
Contact Plating	Silver

Mechanical data	
Solder pin arrangement	over the entire male connector (in-line)
Number of solder pins per potential	3
Solder pin length	4 mm
Solder pin dimensions	1.2 x 1.2 mm
Drilled hole diameter	1.7 $^{(+0.1)}$ mm

Environmental requirements	
Limit temperature range	-60 … +120 °C
Processing temperature	-35 … +60 °C

Note:
The *MCS – MULTI CONNECTION SYSTEM* includes connectors without breaking capacity in accordance with DIN EN 61984. When used as intended, these connectors must not be connected/disconnected when live or under load.When used as intended, these connectors must not be connected/disconnected when live or under load. The circuit design should ensure header pins, which can be touched, are not live when unmated.

Coding Page 878

See technical section for further information

Approvals and corresponding ratings, visit www.wago.com

THT male header ▸ *MCS* MAXI 16 ▸ 832 Series

Pin spacing: 10.16 mm / 0.4 inches ▸ Solder pin dimensions: 1.2 x 1.2 mm ▸ Terminal block assembly
Terminal strip, Color: light gray

Mating direction to the PCB: 0 °



832-3624

Pole number	Item No.	PU
2	832-3622	60
3	832-3623	45
4	832-3624	20
5	832-3625	20
6	832-3626	10

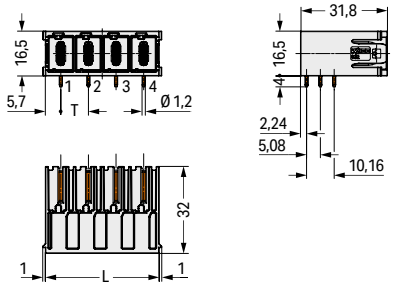

L = (pole no. x pin spacing) + 1.3 mm

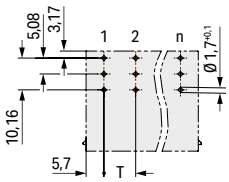

L = (pole no. x pin spacing) + 1.3 mm

Mating direction to the PCB: 180 °



832-3644

Pole number	Item No.	PU
2	832-3642	60
3	832-3643	45
4	832-3644	20
5	832-3645	20
6	832-3646	10

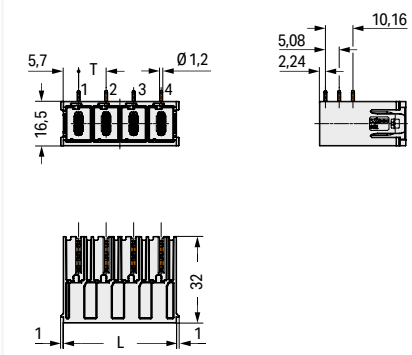

L = (pole no. x pin spacing) + 1.3 mm

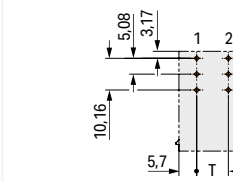

L = (pole no. x pin spacing) + 1.3 mm

Mating direction to the PCB: 90 °



832-3604

Pole number	Item No.	PU
2	832-3602	60
3	832-3603	45
4	832-3604	20
5	832-3605	20
6	832-3606	10

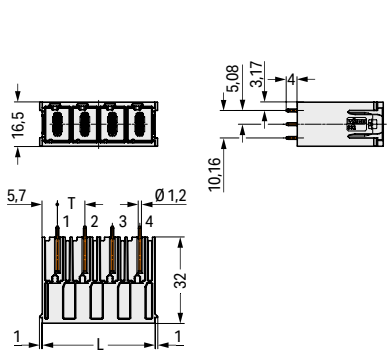

L = (pole no. x pin spacing) + 1.3 mm

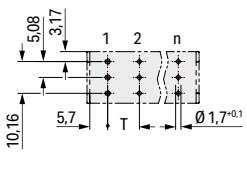

L = (pole no. x pin spacing) + 1.3 mm

10

PU = packaging unit; SPU = subpackaging unit; Dimensions in mm

Variants:
- Other pole numbers
- Protection against PCB mounting errors
- Other versions (or variants) can be requested from WAGO Sales or configured at https://configurator.wago.com/.

Direct Marking

MCS MAXI 6 and *MCS* MAXI 16





Direct marking of female connectors; parallel to conductor entry; 1 … pole no.; item no. suffix.: /. . . - 9037	
Version	**Item No. Example**
1-conductor female connector; 6-pole; light gray	**831-3106/000-9037**
1-conductor female connector; with locking levers; 6-pole; light gray	**831-3106/037-9037**

Direct marking of male connectors; parallel to conductor entry; pole no. … 1; item no. suffix.: /. . . - 9034	
Version	**Item No. Example**
1-conductor male connector; 6-pole; light gray	**831-3206/000-9034**
1-conductor male connector; for DIN-35 rail mounting; 6-pole, light gray	**831-3206/007-9034**

MCS MAXI 6 ▸ Coding ▸ Coding pin carrier with 6 coding pins ▸ Suitable: for THT male headers ▸ Color: orange



831-500

Color	Item No.	PU (SPU)
orange	831-500	100 (25)

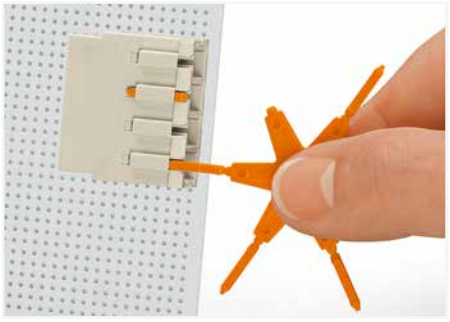

Coding a THT male header by inserting a coding pin.

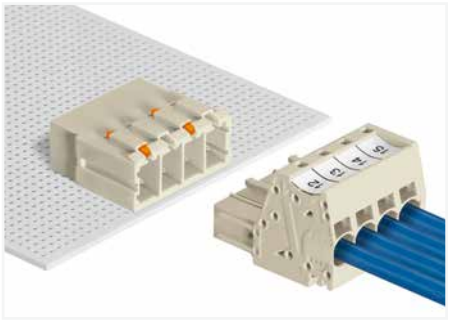

Coded connectors

10

PU = packaging unit; SPU = subpackaging unit

MCS MAXI 6 ▸ Mounting accessories ▸ Mounting adapter, for DIN-35 rail ▸ Color: light gray

Mounting type: Snapping on



831-1032

Color	Width	Item No.	PU
◯ light gray	15.1 mm	**831-1032**	12

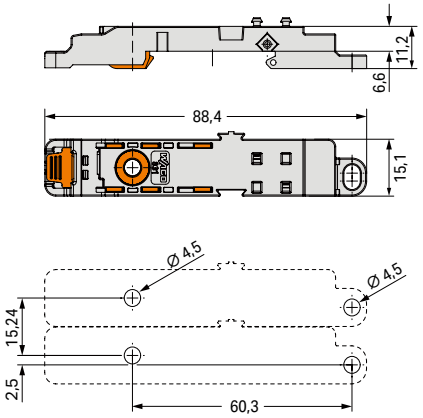

Mounting type: Snap-in with locking plate



831-1038

Color	Width	Item No.	PU
◯ light gray	15.1 mm	**831-1038**	12

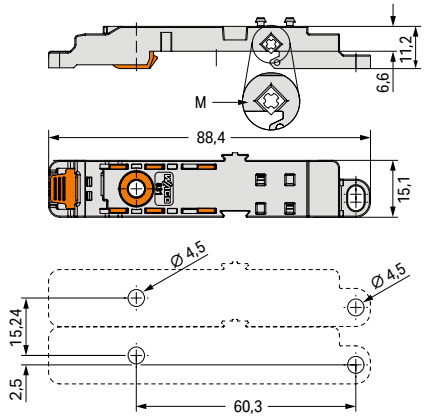

M = Locking plate for axial locking on the mounting rail

Mounting type: Snap-in with locking plate



831-137

Color	Item No.	PU
◯ light gray	**831-137**	48

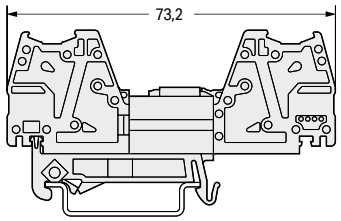

PU = packaging unit; SPU = subpackaging unit; Dimensions in mm

MCS MAXI 6 ▸ Snap-in frame ▸ Mounting type: Snap-in flange ▸ Color: light gray



831-303

Width	Item No.	PU
45.84 mm	**831-302**	48
53.46 mm	**831-303**	48
61.08 mm	**831-304**	24
68.7 mm	**831-305**	12

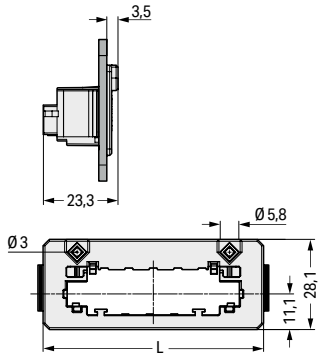

L = (pole no. x 7.62 mm) + 30.6 mm

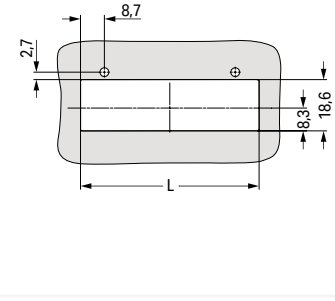

Panel cutout for snap-in frame
L = (pole no. x 7.62 mm) + 26.8 mm



Insert the snap-in frame into the cutout.

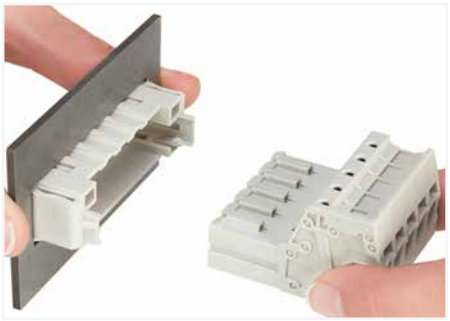

Insert the male connector into the snap-in frame.



Inserting a female connector equipped with lateral locking levers.



Inserting a female connector without lateral locking levers – lockout pins are inserted on both sides of the snap-in frame.

Accessories; for all products on this page



Locking Device

Suitable	Item No.	PU
for snap-in frame, 831 Series	**831-321**	100

PU = packaging unit; SPU = subpackaging unit; Dimensions in mm

MCS MAXI 6 ▸ Strain relief plate ▸ Suitable for standard male and female connectors ▸ Color: light gray



831-503

Width	Item No.	PU (SPU)
15 mm	**831-503**	96 (24)
30 mm	**831-505**	48 (24)
51 mm	**831-506**	48 (24)

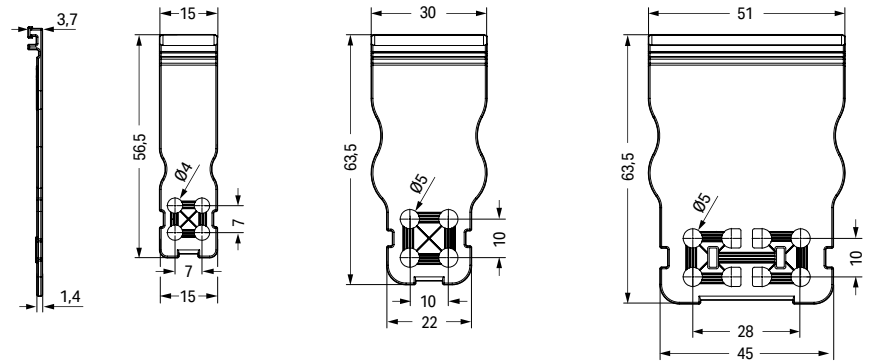

The arrangement of the attachments for cable ties allows single conductors or multi-core cables to be secured in different ways. The width of the cable ties must correspond to the hole dimensions of the strain relief plates shown above.

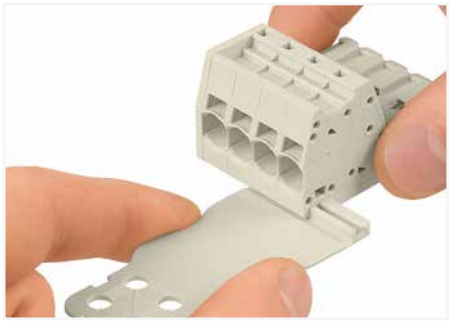

Strain relief plate, for field assembly



Strain relief plate, for factory assembly
1-conductor female conductor, 4-pole, 7.62 mm pin spacing, light gray (831-3104/135-000)

10

PU = packaging unit; SPU = subpackaging unit; Dimensions in mm

MCS MAXI 16 ▸ Coding ▸ Coding pin carrier with 6 coding pins ▸ Suitable: for THT male headers ▸ Color: orange



832-500

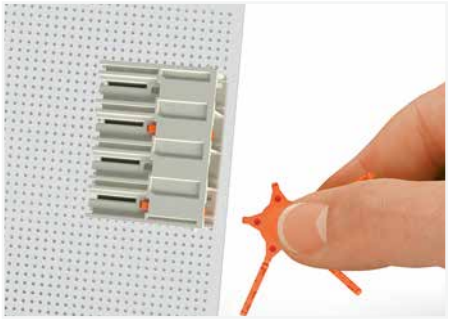

Coding a THT male header by inserting a coding pin.

Color	Item No.	PU (SPU)
orange	**832-500**	100 (25)

10

PU = packaging unit; SPU = subpackaging unit

MCS MAXI 16 ▸ Mounting accessories ▸ Mounting adapter, for DIN-35 rail ▸ Color: light gray

Mounting type: Snapping on



832-1032

Color	Width	Item No.	PU
◯ light gray	20.2 mm	832-1032	10

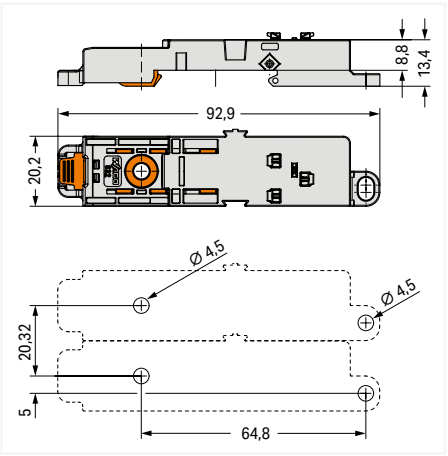

Mounting type: Snap-in with locking plate



832-1038

Color	Width	Item No.	PU
◯ light gray	20.2 mm	832-1038	10

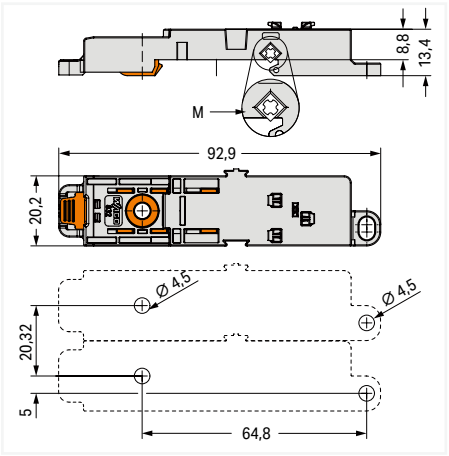

M = Locking plate for axial locking on the mounting rail

10

PU = packaging unit; SPU = subpackaging unit; Dimensions in mm

MCS MAXI 16 ▸ Strain relief plate ▸ Suitable for standard male and female connectors

Color: light gray



832-533

Pole number	Width	Item No.	PU (SPU)
2	20.2 mm	**832-532**	60 (10)
3	30.4 mm	**832-533**	45 (15)
4	40.6 mm	**832-534**	40 (10)
5	50.8 mm	**832-535**	40 (10)

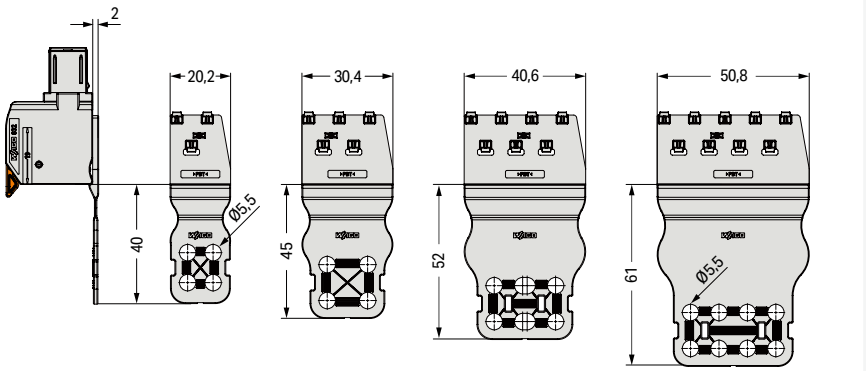

The arrangement of the attachments for cable ties allows single conductors or multi-core cables to be secured in different ways. The width of the cable ties must correspond to the hole dimensions of the strain relief plates shown above.

Cable ties and binding tools are not offered by WAGO.



Strain relief plate; for field assembly



Strain relief plate; for field assembly



Strain relief plate; for field assembly

PU = packaging unit; SPU = subpackaging unit; Dimensions in mm

MCS MAXI 16 ▸ Strain relief plate ▸ Suitable for standard male and female connectors

Locking of plug-in connection: Center locking lever ▸ Color: orange



832-543

Pole number	Width	Item No.	PU (SPU)
2	20.2 mm	**832-542**	60 (10)
3	30.4 mm	**832-543**	45 (15)
4	40.6 mm	**832-544**	40 (10)
5	50.8 mm	**832-545**	40 (10)

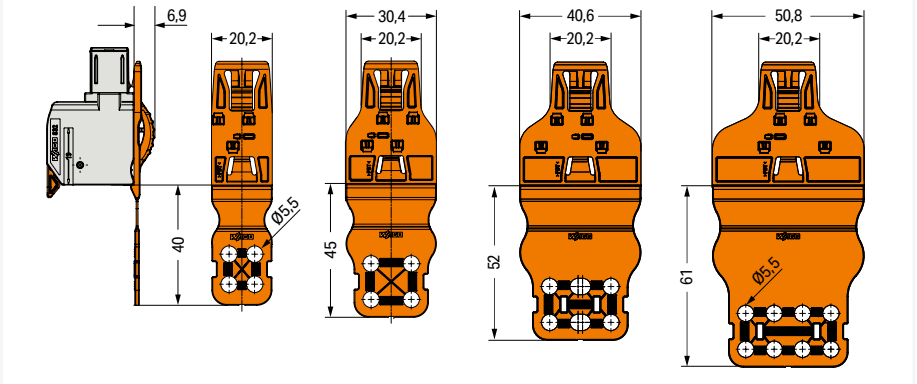

The arrangement of the attachments for cable ties allows single conductors or multi-core cables to be secured in different ways. The width of the cable ties must correspond to the hole dimensions of the strain relief plates shown above.

Cable ties and binding tools are not offered by WAGO.



Locking lever; for field assembly



Locking lever; for field assembly



Locking lever; for field assembly

PU = packaging unit; SPU = subpackaging unit; Dimensions in mm

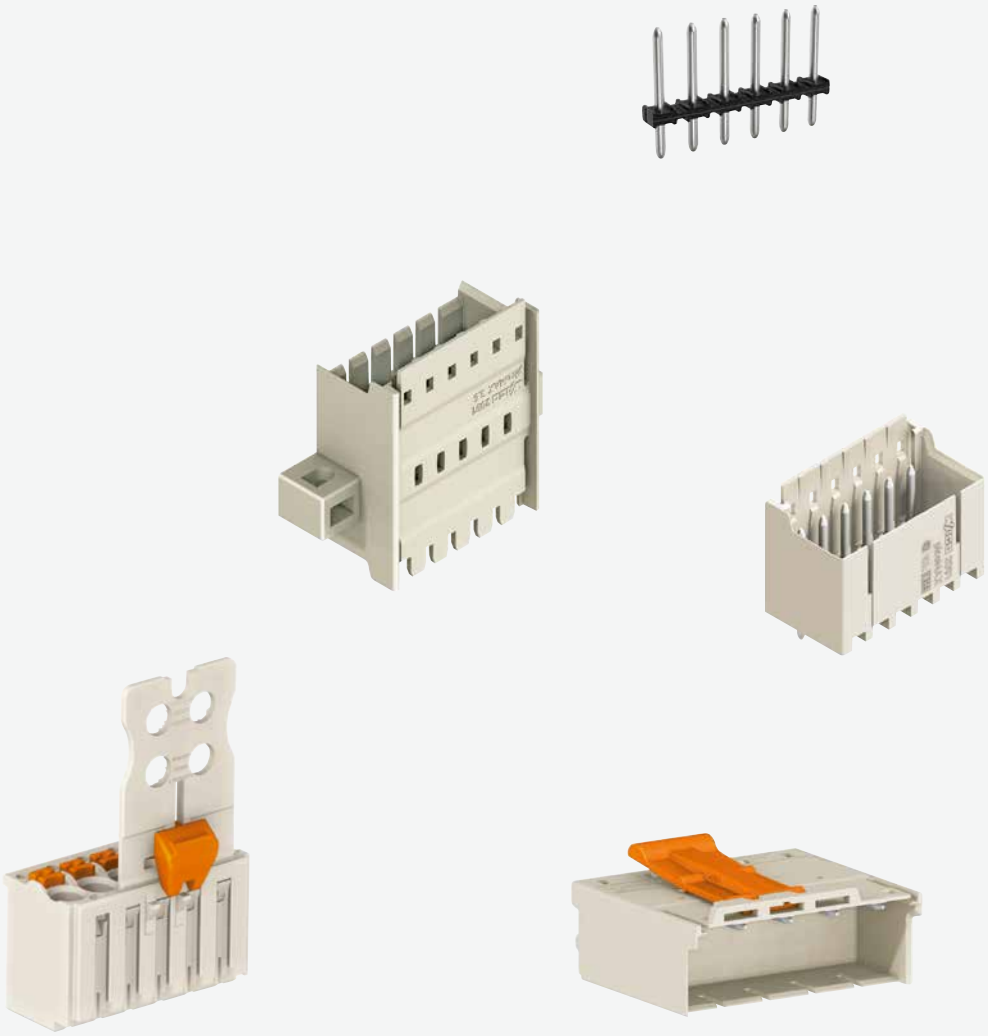

picoMAX®

picoMAX®

Pin spacing: 3.5 mm, 5.0 mm, 7.5 mm ▸ 1.5 mm²

		Pin spacing	Page
	1-conductor female connector ▸ Actuation type: Push-button ▸ Push-In CAGE CLAMP®	3,5 mm 5 mm 7,5 mm	886 912 936
	1-conductor male connector ▸ Actuation type: Push-button ▸ Push-In CAGE CLAMP®	3,5 mm 5 mm 7,5 mm	890 916 940
	THT female header	3,5 mm 5 mm 7,5 mm	892 918 942
	THT male header	3,5 mm 5 mm 7,5 mm	894 920 944
	THT pin strip	3,5 mm 5 mm 7,5 mm	898 924 948
	THR female header	3,5 mm 5 mm 7,5 mm	902 926 950
	THR male header	3,5 mm 5 mm 7,5 mm	904 928 952
	THR pin strip	3,5 mm 5 mm 7,5 mm	908 932 956
	Panel feedthrough male connector	3,5 mm 5 mm	910 934
	Accessories for *picoMAX*® Accessories and Tools		958 1063

picoMAX® Pin Spacing: 3.5 mm, 5 mm and 7.5 mm
Description and Installation



Inserting fine-stranded conductor into unmated female connector via push-button.



Inserting fine-stranded conductor into mated female connector via push-button.



Inserting solid and ferruled conductors via push-in termination

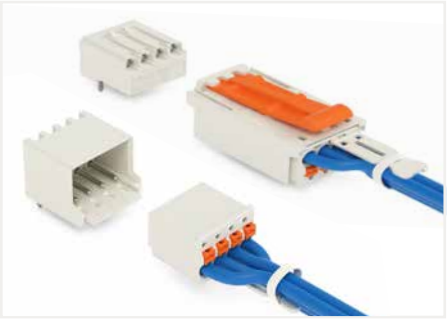

Easy-to-identify PCB inputs and outputs.

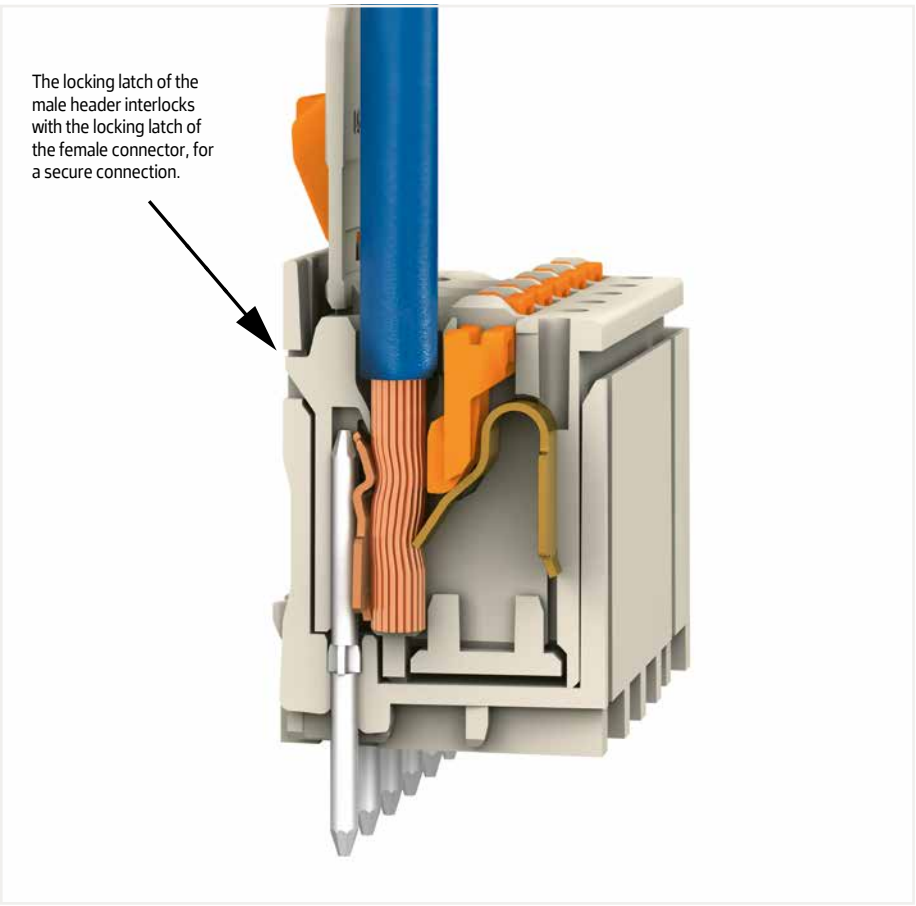



"Wire-to-wire" flying leads

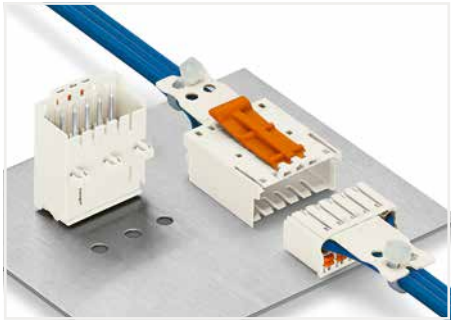

Male connectors with snap-in mounting feet for panel mounting.



Male connector with snap-in mounting feet on mounting adapter for DIN 35 rail.



Pole marking via factory direct printing.

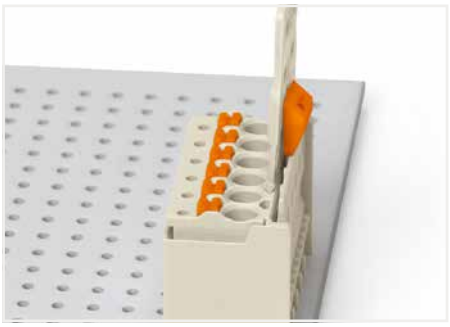

Male header mated to a female connector with gripping plate and sliding connector release.

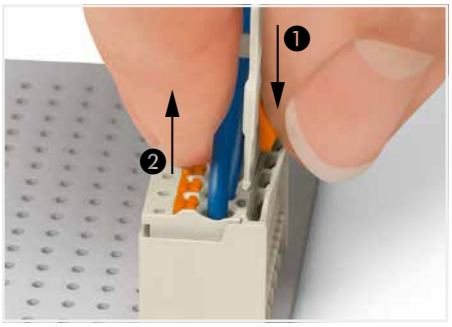

Disconnecting female connector via sliding connector release.
❶ Push down sliding connector release (gripping plate) to open the locking latch.
❷ Pull out female connector from male header.

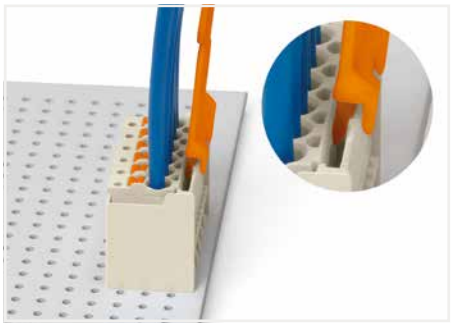

Disconnecting female connector via unlocking tool. Plug unlocking tool into the male locking latch.

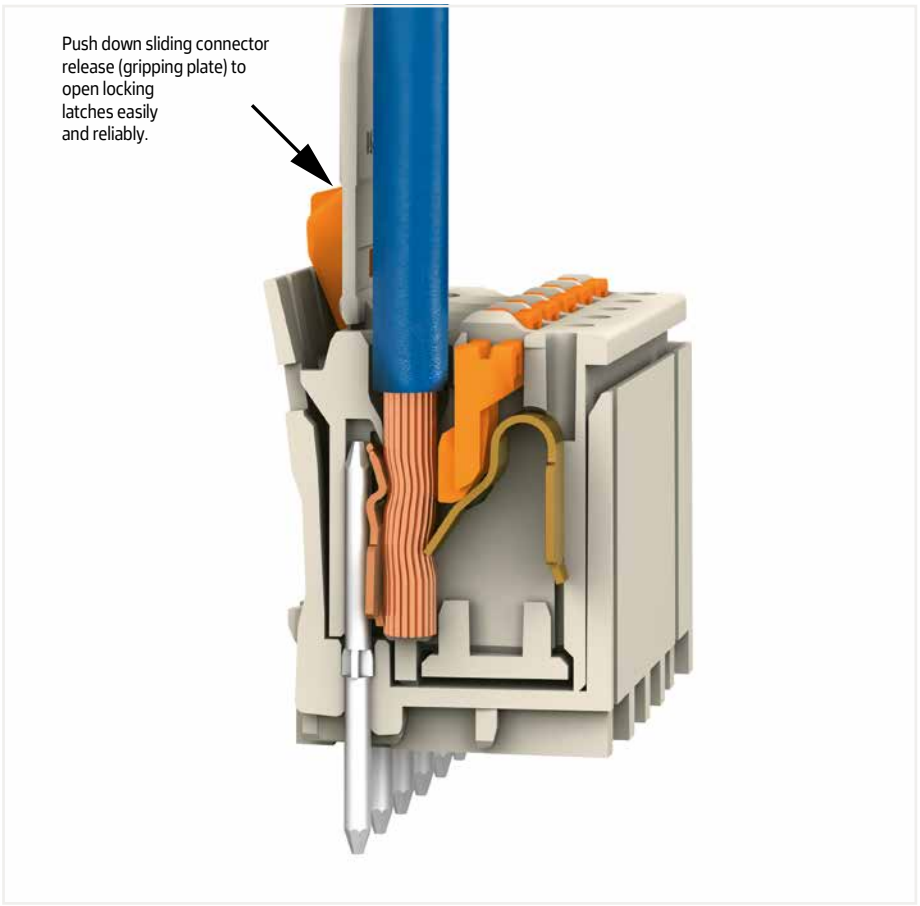

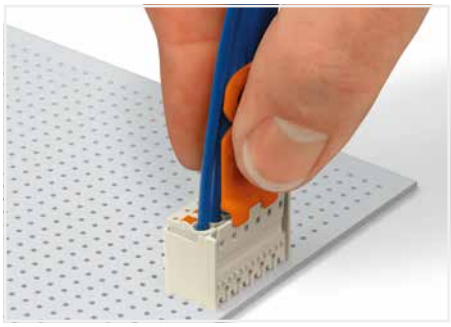

Insert unlocking tool until it hits backstop. Wedge opens locking latches. Pull on both unlocking tool and conductors to remove female connector from male header.

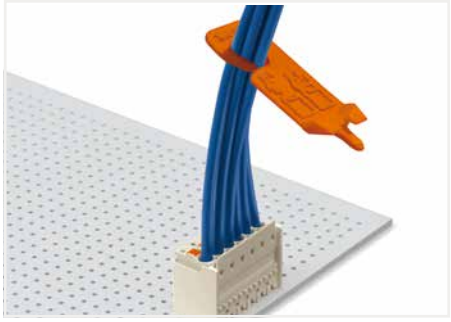

Unlocking tool may be suspended on wire harness for storage.



Coding a female connector (via coding key carrier and two keys for female connector, see symbol).

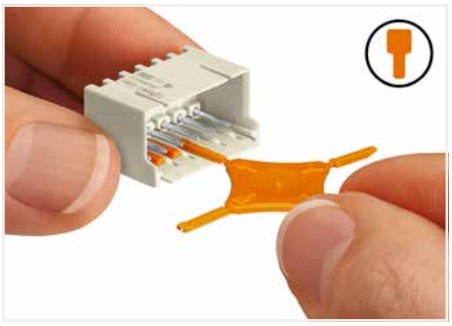

Coding a male header (via coding key carrier and two keys for male header, see symbol).



Tape & reel packaging for efficient processing

1-conductor female connector ▸ *picoMAX*® 3.5 ▸ 2091 Series

Pin spacing: 3.5 mm / 0.138 inches ▸ Actuation type: Push-button ▸ Push-in CAGE CLAMP® ▸ Color: light gray

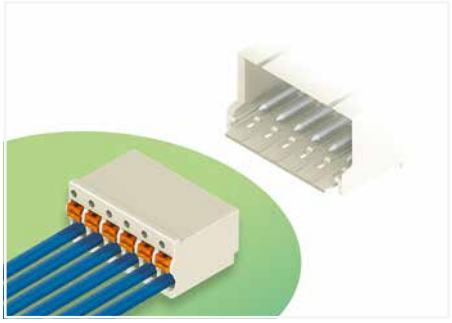

- Universal connection of all conductor types
- Simple, push-in termination of solid and ferruled conductors
- Easy-to-use design does not require special tools
- Ability to wire while mated or unmated
- Testing parallel to conductor entry – tip contact
- Also available with gripping plates
- Integrated locking latches prevent accidental disconnection

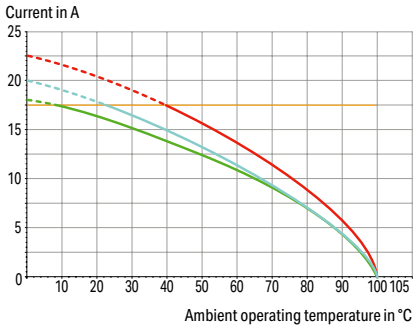

Electrical data			
Ratings per	**IEC/EN 60664-1**		
Overvoltage category	III	III	II
Pollution degree	3	2	2
Nominal voltage	160 V	160 V	320 V
Rated impulse withstand voltage	2.5 kV	2.5 kV	2.5 kV
Rated current	10 A	10 A	10 A
Approvals per	**UL 1059**		
Use group	B	C	D
Rated voltage	300 V	-	300 V
Rated current	10 A	-	10 A

Connection Data	
Connection technology	Push-in CAGE CLAMP®
Strip length	8 … 9 mm / 0.31 … 0.35 inches
Solid conductor	0.2 … 1.5 mm² / 24 … 14 AWG
Fine-stranded conductor	0.2 … 1.5 mm² / 24 … 14 AWG
Fine-stranded conductor; with insulated ferrule	0.25 … 0.75 mm²
Fine-stranded conductor; with uninsulated ferrule	0.25 … 1.5 mm²

Material data	
Material group	I
Insulation material (main housing)	Polyphthalamide (PPA GF)
Flammability class per UL94	V0
Clamping spring material	Chrome-nickel spring steel (CrNi)
Contact material	Electrolytic copper (E_{Cu})
Contact Plating	Tin

Environmental requirements	
Limit temperature range	-60 … +100 °C
Processing temperature	-35 … +60 °C

Note:
The **picoMAX® Pluggable Connection System** includes connectors without breaking capacity in accordance with DIN EN 61984. When used as intended, these connectors must not be connected/disconnected when live or under load.When used as intended, these connectors must not be connected/disconnected when live or under load. The circuit design should ensure header pins, which can be touched, are not live when unmated.
The use of ferrules is recommended for applications with higher requirements.

To prevent excessive force on the clamping point, effective cable strain relief must be used.

Coding	Page 961
Ferrule	Page 1081
Strain relief	Page 962
Test and measurement	Page 1088
Tool	Page 960, 1072
Direct marking	Page 958
See technical section for further information	
Approvals and corresponding ratings, visit www.wago.com	

1-conductor female connector ▸ *picoMAX*® 3.5 ▸ 2091 Series

Pin spacing: 3.5 mm / 0.138 inches ▸ Actuation type: Push-button ▸ Push-in CAGE CLAMP® ▸ Color: light gray



2091-1126

Pole number	Item No.	PU
2	**2091-1122**	200
3	**2091-1123**	200
4	**2091-1124**	200
5	**2091-1125**	200
6	**2091-1126**	100
7	**2091-1127**	100
8	**2091-1128**	100
10	**2091-1130**	100
12	**2091-1132**	100

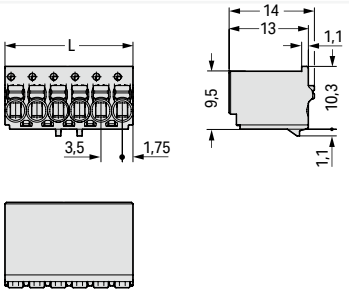

L = pole no. x pin spacing



Disconnecting a female connector via unlocking tool. Plug unlocking tool into the male header's locking latch.

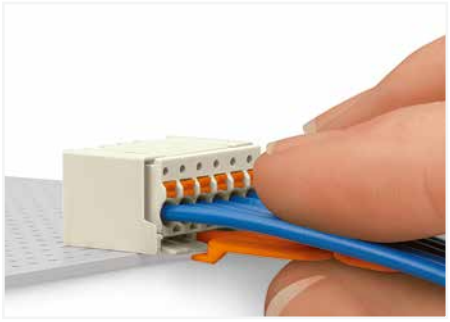

Insert unlocking tool until it hits the backstop. Wedge opens locking latches.



Pull on both unlocking tool and conductors to remove female connector from male header.

11

PU = packaging unit; SPU = subpackaging unit; Dimensions in mm

Variants:

- Direct marking
- Other versions (or variants) can be requested from WAGO Sales or configured at https://configurator.wago.com/.

1-conductor female connector ▸ *picoMAX*® 3.5 ▸ 2091 Series

Pin spacing: 3.5 mm / 0.138 inches ▸ Actuation type: Push-button ▸ Push-in CAGE CLAMP® ▸ Color: light gray

with gripping plate and sliding connector release



2091-1106/002-000

Pole number	Item No.	PU
2	**2091-1102/002-000**	100
3	**2091-1103/002-000**	100
4	**2091-1104/002-000**	100
5	**2091-1105/002-000**	50
6	**2091-1106/002-000**	50
7	**2091-1107/002-000**	50
8	**2091-1108/002-000**	50
10	**2091-1110/002-000**	50
12	**2091-1112/002-000**	50

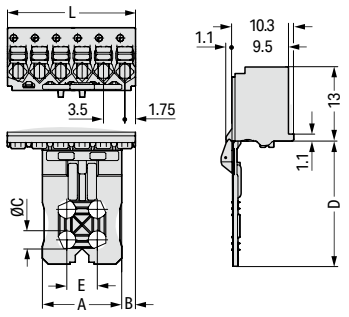

Pole No.	L	A	B	C	D	E
2	7	6	0.45	–	17	–
3	10.5	6	2.20	–	17	–
4	14	6	2.20	–	17	–
5	17.5	13	2.25	3.0	20	5
6	21	13	2.25	3.0	20	5
7	24	13	5.75	3.0	20	5
8	28	13	5.75	3.0	20	5
10	35	27	2.25	4.2	25	8
12	42	27	5.75	4.2	25	8

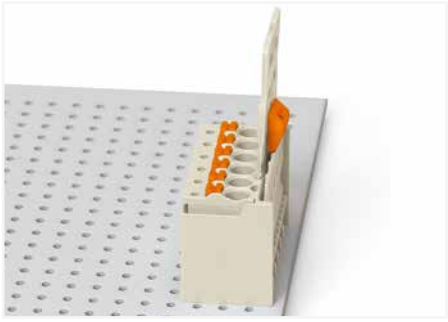

Male header mated to a female connector with gripping plate and sliding connector release.

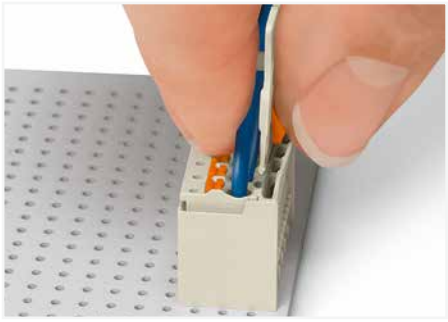

Push down sliding connector release (gripping plate) to open the locking latch.

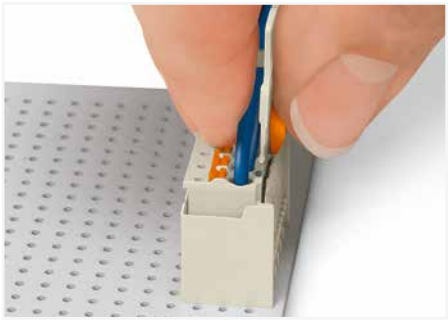

Pull out female connector from male header.

PU = packaging unit; SPU = subpackaging unit; Dimensions in mm

Variants:
- Direct marking
- Other versions (or variants) can be requested from WAGO Sales or configured at https://configurator.wago.com/.

1-conductor female connector ▸ *picoMAX*® 3.5 ▸ 2091 Series

Pin spacing: 3.5 mm / 0.138 inches ▸ Actuation type: Push-button ▸ Push-in CAGE CLAMP® ▸ Color: light gray

with gripping plate



2091-1106

Pole number	Item No.	PU
2	**2091-1102**	100
3	**2091-1103**	100
4	**2091-1104**	100
5	**2091-1105**	50
6	**2091-1106**	50
7	**2091-1107**	50
8	**2091-1108**	50
10	**2091-1110**	50
12	**2091-1112**	50

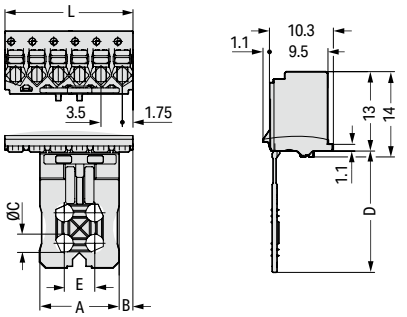

Pole No.	L	A	B	C	D	E
2	7	6	0.45	–	17	–
3	10.5	6	2.20	–	17	–
4	14	6	2.20	–	17	–
5	17.5	13	2.25	3.0	20	5
6	21	13	2.25	3.0	20	5
7	24	13	5.75	3.0	20	5
8	28	13	5.75	3.0	20	5
10	35	27	2.25	4.2	25	8
12	42	27	5.75	4.2	25	8

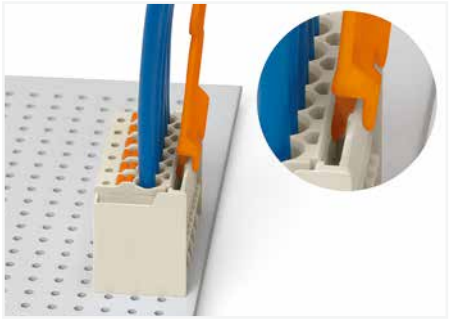

Disconnecting a female connector via unlocking tool. Plug unlocking tool into the male header's locking latch.

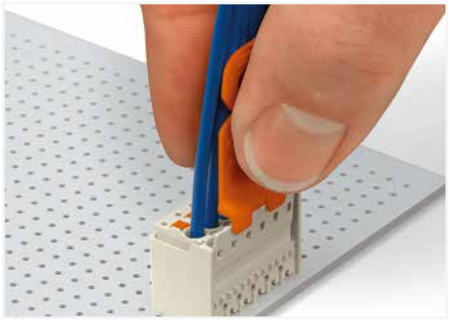

Insert unlocking tool until it hits the backstop. Wedge opens locking latches.

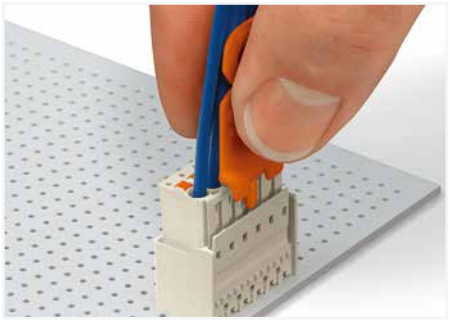

Pull on both unlocking tool and conductors to remove female connector from male header.

PU = packaging unit; SPU = subpackaging unit; Dimensions in mm

Variants:

- Direct marking
- Other versions (or variants) can be requested from WAGO Sales or configured at https://configurator.wago.com/.

1-conductor male connector ▸ *picoMAX*® 3.5 ▸ 2091 Series

Pin spacing: 3.5 mm / 0.138 inches ▸ Actuation type: Push-button ▸ Push-in CAGE CLAMP® ▸ Locking of plug-in connection: Locking latch ▸ Color: light gray

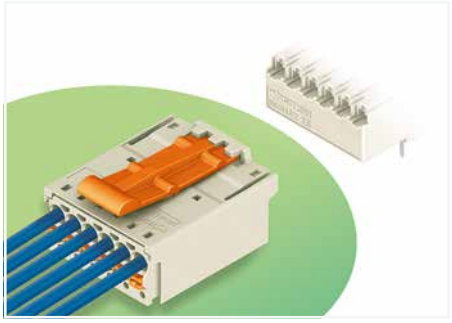

- Universal connection for all conductor types
- Simple, push-in termination of solid and ferruled conductors
- Easy-to-use design does not require special tools
- Testing parallel to conductor entry – tip contact
- For “wire-to-wire” and “board-to-wire” connections
- Integrated release lever

Derating Curve
1-conductor female connector (2091-1126) with
1-conductor male connector (2091-1526/002-000)
Pin spacing: 3.5 mm / Conductor cross-section: 1.5 mm² "f-st"
Based on: EN 60512-5-2 / Reduction factor: 0.8

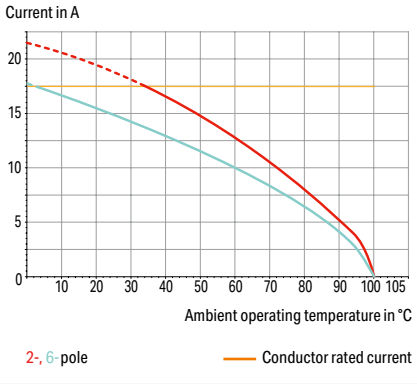

Electrical data			
Ratings per	**IEC/EN 60664-1**		
Overvoltage category	III	III	II
Pollution degree	3	2	2
Nominal voltage	160 V	160 V	320 V
Rated impulse withstand voltage	2.5 kV	2.5 kV	2.5 kV
Rated current	10 A	10 A	10 A
Approvals per	**UL 1059**		
Use group	B	C	D
Rated voltage	300 V	-	300 V
Rated current	10 A	-	10 A

Connection Data	
Connection technology	Push-in CAGE CLAMP®
Strip length	8 … 9 mm / 0.31 … 0.35 inches
Solid conductor	0.2 … 1.5 mm² / 24 … 14 AWG
Fine-stranded conductor	0.2 … 1.5 mm² / 24 … 14 AWG
Fine-stranded conductor; with insulated ferrule	0.25 … 0.75 mm²
Fine-stranded conductor; with uninsulated ferrule	0.25 … 1.5 mm²

Material data	
Material group	I
Insulation material (main housing)	Polyphthalamide (PPA GF)
Flammability class per UL94	V0
Clamping spring material	Chrome-nickel spring steel (CrNi)
Contact material	Electrolytic copper (E_{Cu})
Contact Plating	Tin

Environmental requirements	
Limit temperature range	-60 … +100 °C
Processing temperature	-35 … +60 °C

Note:
The **picoMAX® Pluggable Connection System** includes connectors without breaking capacity in accordance with DIN EN 61984. When used as intended, these connectors must not be connected/disconnected when live or under load.When used as intended, these connectors must not be connected/disconnected when live or under load. The circuit design should ensure header pins, which can be touched, are not live when unmated.
The use of ferrules is recommended for applications with higher requirements.

To prevent excessive force on the clamping point, effective cable strain relief must be used.

Coding	Page 961
Ferrule	Page 1081
Test and measurement	Page 1088
Tool	Page 1072
Direct marking	Page 958
See technical section for further information	
Approvals and corresponding ratings, visit www.wago.com	

1-conductor male connector ▸ *picoMAX*® 3.5 ▸ 2091 Series

Pin spacing: 3.5 mm / 0.138 inches ▸ Actuation type: Push-button ▸ Push-in CAGE CLAMP® ▸ Locking of plug-in connection: Locking latch ▸ Color: light gray

	with gripping plate	Mounting type: Snap-in foot







2091-1526/002-000

Pole number	Item No.	PU
2	2091-1522/002-000	200
3	2091-1523/002-000	200
4	2091-1524/002-000	200
5	2091-1525/002-000	100
6	2091-1526/002-000	100
8	2091-1528/002-000	100
10	2091-1530/002-000	50
12	2091-1532/002-000	50

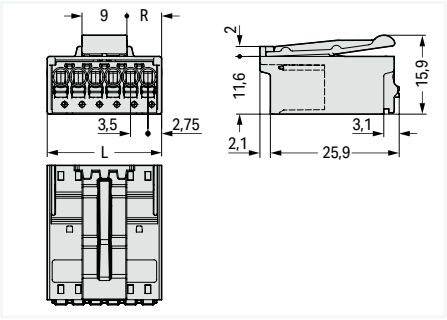

L = (pole no. x pin spacing) + 2 mm
Even pole number R = (L – 9 mm) : 2
Odd pole number R = (L – 12.5 mm) : 2

2091-1506/002-000

Pole number	Item No.	PU
2	2091-1502/002-000	200
3	2091-1503/002-000	100
4	2091-1504/002-000	100
5	2091-1505/002-000	50
6	2091-1506/002-000	50
8	2091-1508/002-000	50
10	2091-1510/002-000	50
12	2091-1512/002-000	50

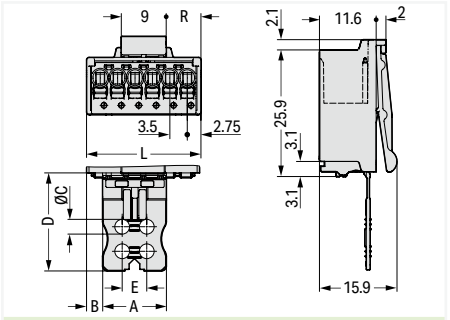

Pole No.	A	B	C	D	E
2	6	1.45	–	17	–
3	6	3.20	–	17	–
4	6	3.20	–	17	–
5	13	3.25	3	20	5
6	13	3.25	3	20	5
7	13	6.75	3	20	5
8	27	3.25	4.2	25	8
10	27	6.75	4.2	25	8
12	27	5.75	4.2	25	8

L = (pole no. x pin spacing) + 2 mm
Even pole number R = (L – 9 mm) : 2
Odd pole number R = (L – 12.5 mm) : 2

2091-1526/020-000

Pole number	Item No.	PU
2	2091-1522/020-000	200
3	2091-1523/020-000	200
4	2091-1524/020-000	200
5	2091-1525/020-000	100
6	2091-1526/020-000	100
8	2091-1528/020-000	100
10	2091-1530/020-000	50
12	2091-1532/020-000	50

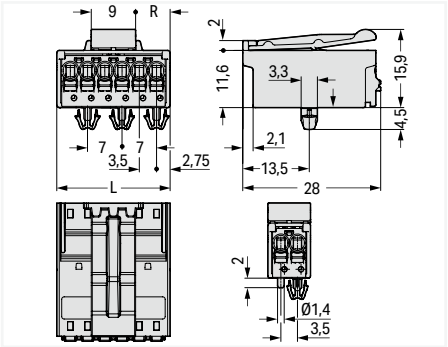

L = (pole no. x pin spacing) + 2 mm
Even pole number R = (L – 9 mm) : 2
Odd pole number R = (L – 12.5 mm) : 2

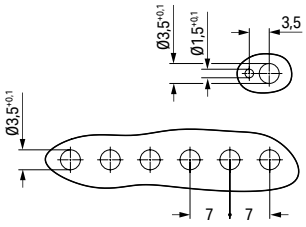

PU = packaging unit; SPU = subpackaging unit; Dimensions in mm

Variants:
- Direct marking
- Other versions (or variants) can be requested from WAGO Sales or configured at https://configurator.wago.com/.

THT female header ▸ *picoMAX*® 3.5 ▸ 2091 Series

Pin spacing: 3.5 mm / 0.138 inches ▸ Color: light gray

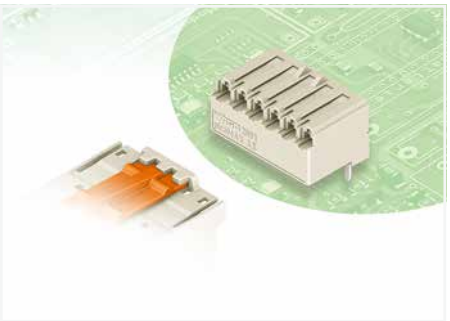

- Touch-proof PCB outputs
- Easy-to-identify PCB inputs and outputs
- Coding option available

Derating Curve
THT female header (2091-1326) with
1-conductor male connector (2091-1526/002-000)
Pin spacing: 3.5 mm / Conductor cross-section: 1.5 mm² "f-st"
Based on: EN 60512-5-2 / Reduction factor: 0.8

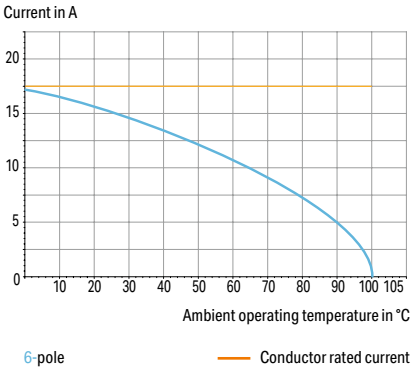

Electrical data			
Ratings per	**IEC/EN 60664-1**		
Overvoltage category	III	III	II
Pollution degree	3	2	2
Nominal voltage	160 V	160 V	320 V
Rated impulse withstand voltage	2.5 kV	2.5 kV	2.5 kV
Rated current	10 A	10 A	10 A
Approvals per	**UL 1059**		
Use group	B	C	D
Rated voltage	300 V	-	300 V
Rated current	10 A	-	10 A

Material data	
Material group	I
Insulation material (main housing)	Polyphthalamide (PPA GF)
Flammability class per UL94	V0
Contact material	Copper alloy
Contact Plating	Tin

Mechanical data	
Solder pin length	3.6 mm
Solder pin dimensions	0.4 x 0.9 mm
Drilled hole diameter	1.1 $^{(+0.1)}$ mm

Environmental requirements	
Limit temperature range	-60 … +100 °C
Processing temperature	-35 … +60 °C

11

Note:
The **picoMAX® Pluggable Connection System** includes connectors without breaking capacity in accordance with DIN EN 61984. When used as intended, these connectors must not be connected/disconnected when live or under load.When used as intended, these connectors must not be connected/ disconnected when live or under load. The circuit design should ensure header pins, which can be touched, are not live when unmated.

Coding Page 961
See technical section for further information
Approvals and corresponding ratings, visit www.wago.com

THT female header ▸ *picoMAX*® 3.5 ▸ 2091 Series

Pin spacing: 3.5 mm / 0.138 inches ▸ Color: light gray

Mating direction to the PCB: 0 °



2091-1326

Pole number	Item No.	PU
2	**2091-1322**	200
4	**2091-1324**	200
6	**2091-1326**	100
8	**2091-1328**	100

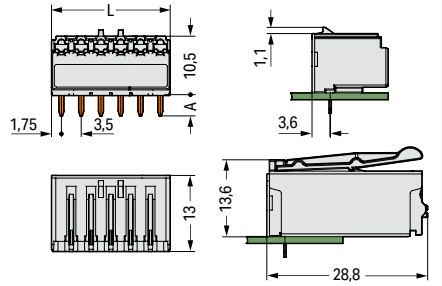

L = pole no. x pin spacing
A = 3.6 mm THT solder pin
A = 2.4 mm THR solder pin

Mating direction to the PCB: 90 °



2091-1306

Pole number	Item No.	PU
2	**2091-1302**	200
4	**2091-1304**	200
6	**2091-1306**	100
8	**2091-1308**	100

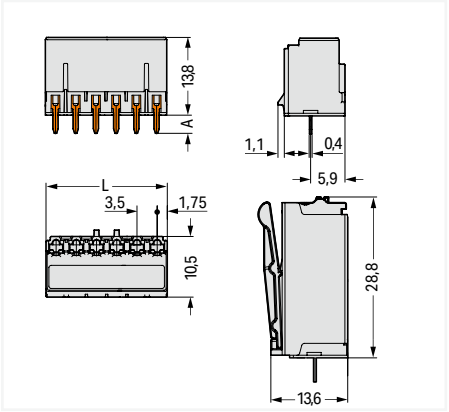

L = pole no. x pin spacing
A = 3.6 mm THT solder pin
A = 2.4 mm THR solder pin

PU = packaging unit; SPU = subpackaging unit; Dimensions in mm

THT male header ▸ *picoMAX*® 3.5 ▸ 2091 Series

Pin spacing: 3.5 mm / 0.138 inches ▸ Locking of plug-in connection: Locking latch ▸ Color: light gray

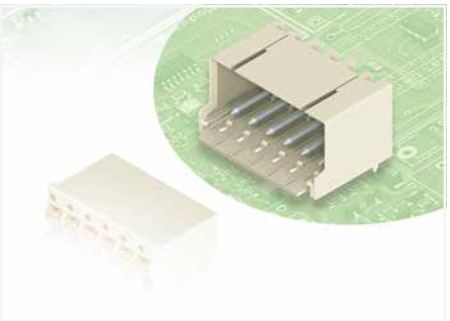

- Modular assembly of multiple female connectors without pole loss within one male header, enabling separation of functions (≥ 4 poles)
- Coding pins integrated in the header interface prevent mismating and allow retroactive coding in panel feedthrough applications
- Female connector deeply embedded in the header housing for 12 g vibration resistance with ferrules

Derating Curve
1-conductor female connector (2091-1122) with
THT male header (2091-1402)
Pin spacing: 3.5 mm / Conductor cross-section: 1.5 mm² "f-st"
Based on: EN 60512-5-2 / Reduction factor: 0.8

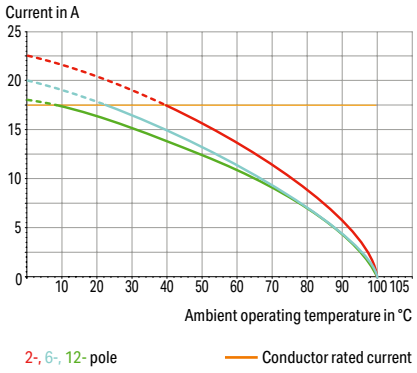

Electrical data			
Ratings per	**IEC/EN 60664-1**		
Overvoltage category	III	III	II
Pollution degree	3	2	2
Nominal voltage	160 V	160 V	320 V
Rated impulse withstand voltage	2.5 kV	2.5 kV	2.5 kV
Rated current	10 A	10 A	10 A
Approvals per	**UL 1059**		
Use group	B	C	D
Rated voltage	300 V	-	300 V
Rated current	10 A	-	10 A

Material data	
Material group	I
Insulation material (main housing)	Polyphthalamide (PPA GF)
Flammability class per UL94	V0
Contact material	Electrolytic copper (E_{Cu})
Contact Plating	Tin

Mechanical data	
Solder pin length	3.6 mm
Solder pin diameter	1 mm
Drilled hole diameter	1.2 $^{(+0.1)}$ mm

Environmental requirements	
Limit temperature range	-60 … +100 °C
Processing temperature	-35 … +60 °C

Note:
The **picoMAX® Pluggable Connection System** includes connectors without breaking capacity in accordance with DIN EN 61984. When used as intended, these connectors must not be connected/disconnected when live or under load.When used as intended, these connectors must not be connected/disconnected when live or under load. The circuit design should ensure header pins, which can be touched, are not live when unmated.

Coding Page 961
See technical section for further information
Approvals and corresponding ratings, visit www.wago.com

THT male header ▸ *picoMAX*® 3.5 ▸ 2091 Series

Pin spacing: 3.5 mm / 0.138 inches ▸ Locking of plug-in connection: Locking latch ▸ Color: light gray

Mating direction to the PCB: 0 °



2091-1426

Pole number	Item No.	PU
2	**2091-1422**	200
3	**2091-1423**	200
4	**2091-1424**	200
5	**2091-1425**	200
6	**2091-1426**	100
7	**2091-1427**	100
8	**2091-1428**	100
10	**2091-1430**	100
12	**2091-1432**	100

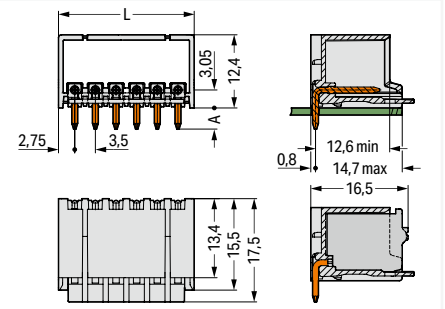

L = (pole no. x pin spacing) + 2.0 mm
A = 3.6 mm THT solder pin
A = 2.4 mm THR solder pin

Mating direction to the PCB: 90 °



2091-1406

Pole number	Item No.	PU
2	**2091-1402**	200
3	**2091-1403**	200
4	**2091-1404**	200
5	**2091-1405**	200
6	**2091-1406**	100
7	**2091-1407**	100
8	**2091-1408**	100
10	**2091-1410**	100
12	**2091-1412**	100

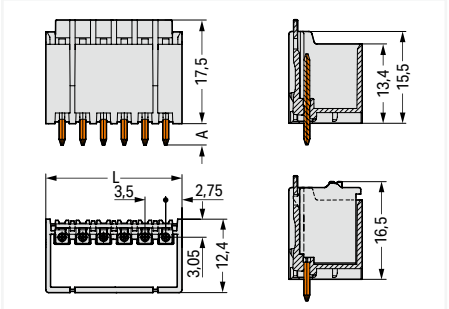

L = (pole no. x pin spacing) + 2.0 mm
A = 3.6 mm THT solder pin
A = 2.4 mm THR solder pin

11

PU = packaging unit; SPU = subpackaging unit; Dimensions in mm

Variants:
- Direct marking
- Other versions (or variants) can be requested from WAGO Sales or configured at https://configurator.wago.com/.

THT male header ▸ *picoMAX*® 3.5 ▸ 2091 Series

Pin spacing: 3.5 mm / 0.138 inches ▸ Locking of plug-in connection: Locking latch ▸ Color: light gray

Mounting type: Feed-through mounting; Panel mounting ▸ Mounting type: Mounting flange

Mating direction to the PCB: 0 °



2091-1426/005-000

Pole number	Item No.	PU
2	**2091-1422/005-000**	200
3	**2091-1423/005-000**	200
4	**2091-1424/005-000**	200
5	**2091-1425/005-000**	200
6	**2091-1426/005-000**	100
8	**2091-1428/005-000**	100
10	**2091-1430/005-000**	100

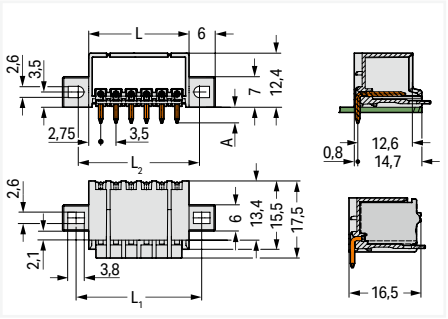

L = (pole no. x pin spacing) + 2 mm
L_1 = (pole no. x pin spacing) + 7.8 mm
L_2 = (pole no. x pin spacing) + 6.8 mm
A = 3.6 mm THT solder pin
A = 2.4 mm THR solder pin

Mating direction to the PCB: 90 °



2091-1406/005-000

Pole number	Item No.	PU
2	**2091-1402/005-000**	200
3	**2091-1403/005-000**	200
4	**2091-1404/005-000**	200
5	**2091-1405/005-000**	200
6	**2091-1406/005-000**	100
8	**2091-1408/005-000**	100
10	**2091-1410/005-000**	100

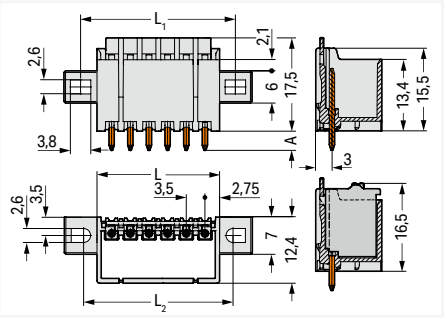

L = (pole no. x pin spacing) + 2.0 mm
L_1 = (pole no. x pin spacing) + 7.8 mm
L_2 = (pole no. x pin spacing) + 6.8 mm
A = 3.6 mm THT solder pin
A = 2.4 mm THR solder pin

11

PU = packaging unit; SPU = subpackaging unit; Dimensions in mm

Variants:
- Direct marking
- Other versions (or variants) can be requested from WAGO Sales or configured at https://configurator.wago.com/.

THT pin strip ▸ *picoMAX*® 3.5 ▸ 2091 Series

Pin spacing: 3.5 mm / 0.138 inches ▸ Color: black

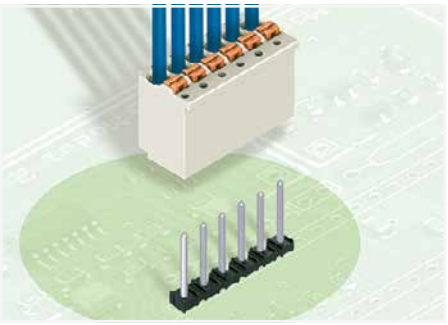

- Solder pin strips may be mounted horizontally or vertically via straight or angled solder pins
- Assembly of female connectors without loss of poles, allowing different functions to be divided within one solder pin strip

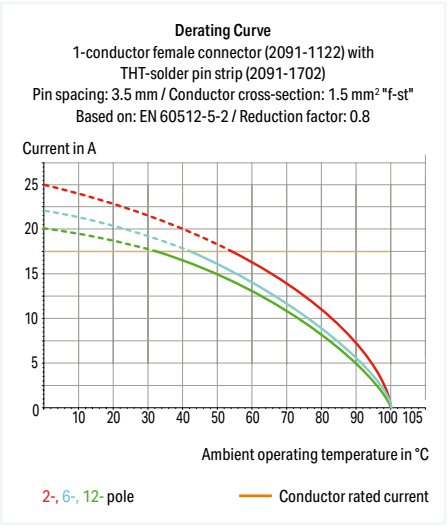

Electrical data			
Ratings per	**IEC/EN 60664-1**		
Overvoltage category	III	III	II
Pollution degree	3	2	2
Nominal voltage	160 V	160 V	320 V
Rated impulse withstand voltage	2.5 kV	2.5 kV	2.5 kV
Rated current	10 A	10 A	10 A

Material data	
Material group	I
Insulation material (main housing)	Polyphthalamide (PPA GF)
Flammability class per UL94	V0
Contact material	Electrolytic copper (E_{Cu})
Contact Plating	Tin

Mechanical data	
Solder pin length	3.6 mm
Solder pin diameter	1 mm
Drilled hole diameter	1.2 $^{(+0.1)}$ mm

Environmental requirements	
Limit temperature range	-60 … +100 °C

Note:
The **picoMAX® Pluggable Connection System** includes connectors without breaking capacity in accordance with DIN EN 61984. When used as intended, these connectors must not be connected/disconnected when live or under load.When used as intended, these connectors must not be connected/disconnected when live or under load. The circuit design should ensure header pins, which can be touched, are not live when unmated.

See technical section for further information

Approvals and corresponding ratings, visit www.wago.com

THT pin strip ▸ *picoMAX*® 3.5 ▸ 2091 Series

Pin spacing: 3.5 mm / 0.138 inches ▸ Color: black

Mating direction to the PCB: 0 °



2091-1726

Pole number	Item No.	PU
2	2091-1722	400
3	2091-1723	400
4	2091-1724	400
5	2091-1725	400
6	2091-1726	400
7	2091-1727	400
8	2091-1728	400
10	2091-1730	300
12	2091-1732	300

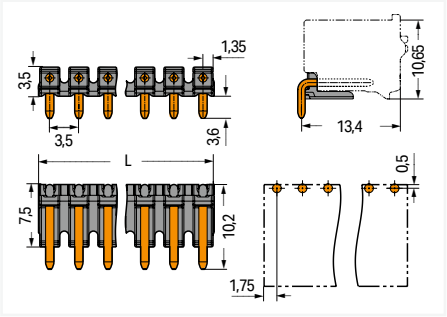

L = (pole no. – 1) x pin spacing + 2.7 mm

Mating direction to the PCB: 90 °



2091-1706

Pole number	Item No.	PU
2	2091-1702	500
3	2091-1703	500
4	2091-1704	500
5	2091-1705	500
6	2091-1706	500
7	2091-1707	500
8	2091-1708	500
10	2091-1710	400
12	2091-1712	400

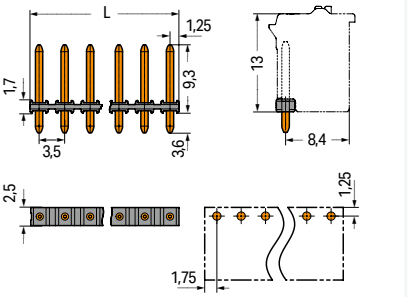

L = (pole no. – 1) x pin spacing + 2.5 mm

PU = packaging unit; SPU = subpackaging unit

THR (Through-Hole Reflow) Soldering Process

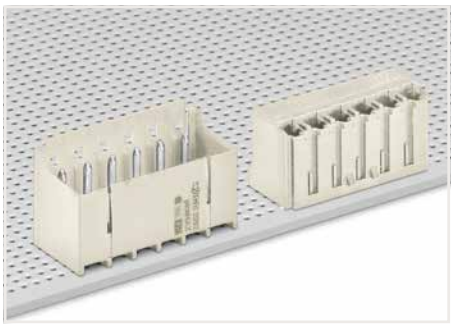

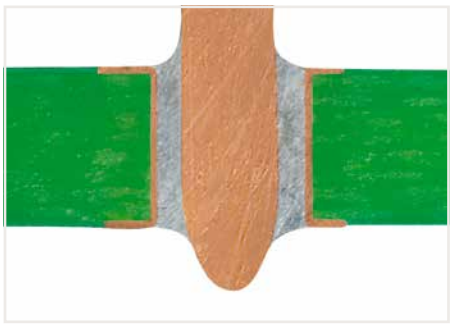

By using high-temperature-resistant plastic and a streamlined pin design, WAGO's THR male headers and PCB terminal blocks meet requirements for SMT process capability while maintaining the necessary stability. Both headers and terminal blocks are simply pushed into the solder paste-filled PCB holes and then soldered along with the SMT components via reflow soldering. The previous wave soldering process is no longer necessary. The result is a perfect connection – both mechanically and electrically.



Terminal strips with an additional suction pad in tape-and-reel packaging per IEC 60286-3
WAGO recommends both a temperature profile that adheres to EN 61760-1 and the use of forced convection ovens for processing THR components.

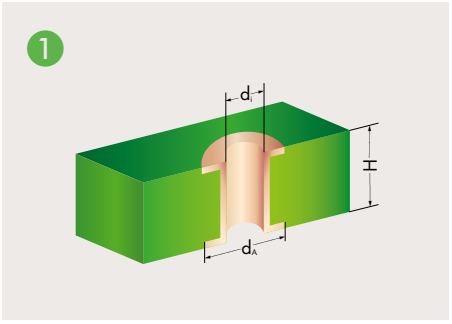

Metal-plated PCB bore hole

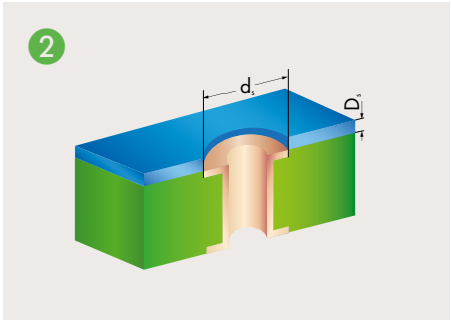

SMD positioning pattern

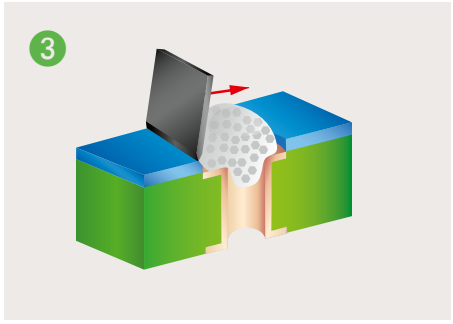

Solder paste application

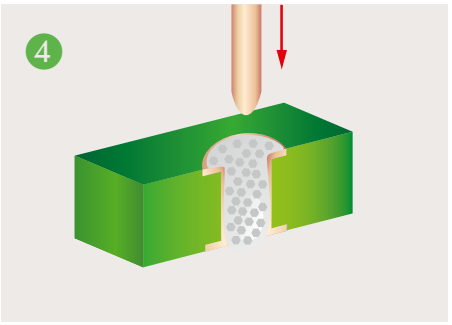

Component assembly, automatic/by hand

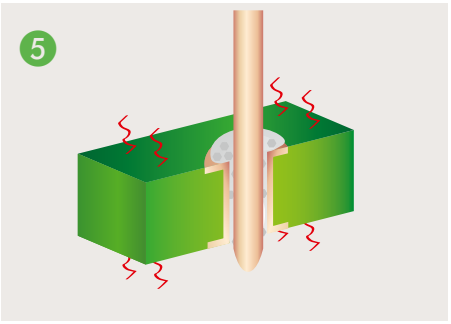

Reflow soldering process

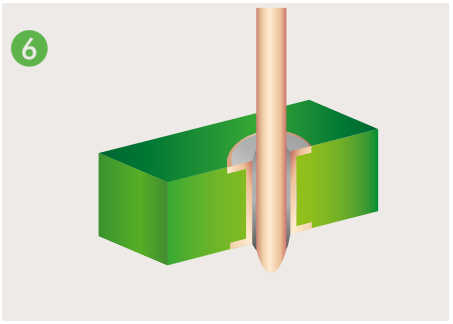

THR soldering joint

Series	d_i (mm)	d_A (mm)	H (mm)	d_s (mm)	D_s (µm)	d (mm)	L (mm)
2091	$1.2^{+0.1}$	1.9	< 2	1.8	150	1.0 ○	2.4
2091	$1.2^{+0.1}$	1.9	< 2	1.8	150	0.4 x 0.9 ▭	2.4
2092	$1.6^{+0.1}$	2.3	< 2	2.2	150	1.4 ○	2.4
2092	$1.5^{+0.1}$	2.2	< 2	2.1	150	0.4 x 1.3 ▭	2.4

d_i: Plated through-hole diameter
d_A: Outer diameter of metal-plated PCB hole*
H: PCB thickness
d_s: Pattern hole diameter
D_s: Pattern thickness
d: Pin diagonal
L: Pin length

* When laying out the metal-plated bore holes, the clearance and creepage distance requirements – as specified in the equipment standards – must be considered.

Solder pin form

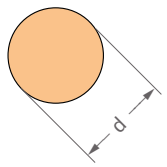

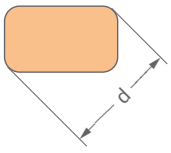

THR female header ▸ *picoMAX*® 3.5 ▸ 2091 Series

Pin spacing: 3.5 mm / 0.138 inches ▸ Color: light gray

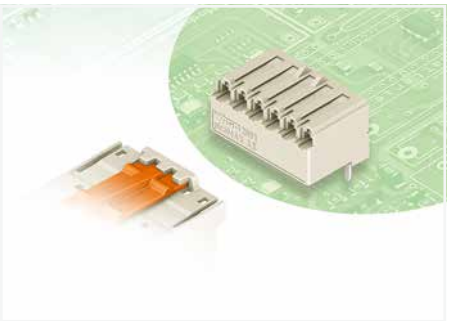

- Modular assembly of multiple female connectors without pole loss within one male header, enabling separation of functions (≥ 4 poles)
- Coding pins integrated in the header interface prevent mismating and allow retroactive coding in panel feedthrough applications

Derating Curve
THT female header (2091-1326) with
1-conductor male connector (2091-1526/002-000)
Pin spacing: 3.5 mm / Conductor cross-section: 1.5 mm² "f-st"
Based on: EN 60512-5-2 / Reduction factor: 0.8

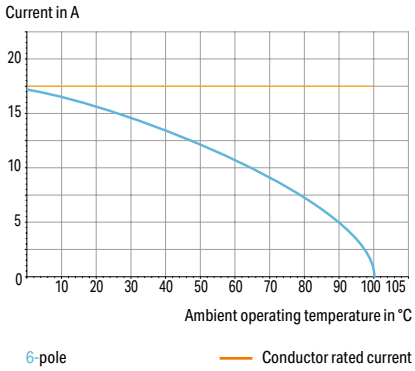

Electrical data			
Ratings per	**IEC/EN 60664-1**		
Overvoltage category	III	III	II
Pollution degree	3	2	2
Nominal voltage	160 V	160 V	320 V
Rated impulse withstand voltage	2.5 kV	2.5 kV	2.5 kV
Rated current	10 A	10 A	10 A
Approvals per	**UL 1059**		
Use group	B	C	D
Rated voltage	300 V	-	300 V
Rated current	10 A	-	10 A

Material data	
Material group	I
Insulation material (main housing)	Polyphthalamide (PPA GF)
Flammability class per UL94	V0
Contact material	Copper alloy
Contact Plating	Tin

Mechanical data	
Solder pin length	2.4 mm
Solder pin dimensions	0.4 x 0.9 mm
Plated through-hole diameter (THR)	1.1 $^{(+0.1)}$ mm

Environmental requirements	
Limit temperature range	-60 … +100 °C
Processing temperature	-35 … +60 °C

11

Note:
The **picoMAX® Pluggable Connection System** includes connectors without breaking capacity in accordance with DIN EN 61984. When used as intended, these connectors must not be connected/disconnected when live or under load.When used as intended, these connectors must not be connected/disconnected when live or under load. The circuit design should ensure header pins, which can be touched, are not live when unmated.

THR soldering	Page 900
Coding	Page 961
See technical section for further information	
Approvals and corresponding ratings, visit www.wago.com	

THR female header ▸ *picoMAX*® 3.5 ▸ 2091 Series

Pin spacing: 3.5 mm / 0.138 inches ▸ Color: light gray

Mating direction to the PCB: 0 °



2091-1326/200-000

Pole number	Item No.	PU
2	**2091-1322/200-000**	200
4	**2091-1324/200-000**	200
6	**2091-1326/200-000**	100
8	**2091-1328/200-000**	100

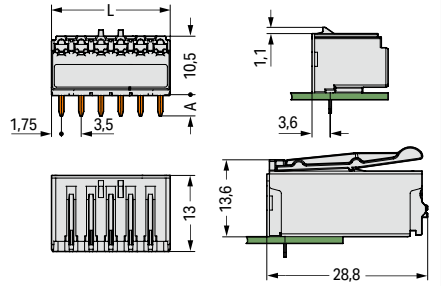

L = pole no. x pin spacing
A = 3.6 mm THT solder pin
A = 2.4 mm THR solder pin

Mating direction to the PCB: 90 °



2091-1306/200-000

Pole number	Item No.	PU
2	**2091-1302/200-000**	200
4	**2091-1304/200-000**	200
6	**2091-1306/200-000**	100
8	**2091-1308/200-000**	100

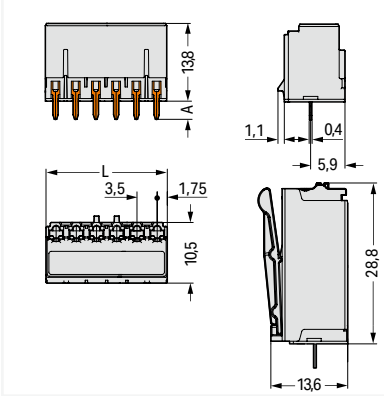

L = pole no. x pin spacing
A = 3.6 mm THT solder pin
A = 2.4 mm THR solder pin

PU = packaging unit; SPU = subpackaging unit; Dimensions in mm

THR male header ▸ *picoMAX*® 3.5 ▸ 2091 Series

Pin spacing: 3.5 mm / 0.138 inches ▸ Locking of plug-in connection: Locking latch

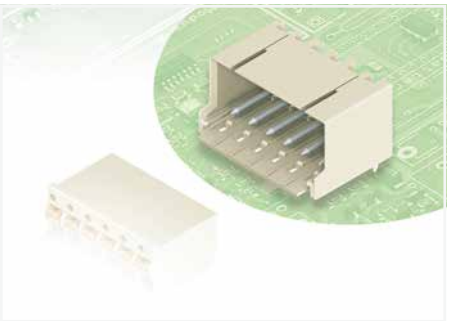

- Modular assembly of multiple female connectors without pole loss within one male header, enabling separation of functions (≥ 4 poles)
- Coding pins integrated in the header interface prevent mismating and allow retroactive coding in panel feedthrough applications
- Female connector deeply embedded in the header housing for 12 g vibration resistance with ferrules

Derating Curve
1-conductor female connector (2091-1122) with
THT male header (2091-1402)
Pin spacing: 3.5 mm / Conductor cross-section: 1.5 mm² "f-st"
Based on: EN 60512-5-2 / Reduction factor: 0.8

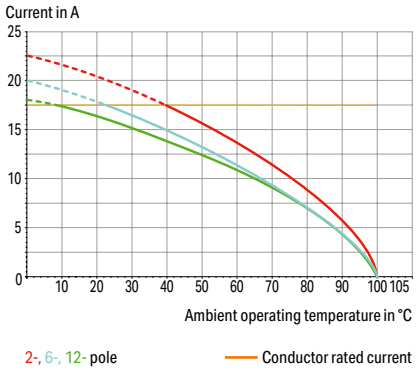

Electrical data			
Ratings per	**IEC/EN 60664-1**		
Overvoltage category	III	III	II
Pollution degree	3	2	2
Nominal voltage	160 V	160 V	320 V
Rated impulse withstand voltage	2.5 kV	2.5 kV	2.5 kV
Rated current	10 A	10 A	10 A
Approvals per	**UL 1059**		
Use group	B	C	D
Rated voltage	300 V	-	300 V
Rated current	10 A	-	10 A

Material data	
Material group	I
Insulation material (main housing)	Polyphthalamide (PPA GF)
Flammability class per UL94	V0
Contact material	Electrolytic copper (E_{Cu})
Contact Plating	Tin

Mechanical data	
Solder pin length	2.4 mm
Solder pin diameter	1 mm
Plated through-hole diameter (THR)	1.2 $^{(+0.1)}$ mm

Environmental requirements	
Limit temperature range	-60 … +100 °C
Processing temperature	-35 … +60 °C

Note:
The **picoMAX® Pluggable Connection System** includes connectors without breaking capacity in accordance with DIN EN 61984. When used as intended, these connectors must not be connected/disconnected when live or under load.When used as intended, these connectors must not be connected/disconnected when live or under load. The circuit design should ensure header pins, which can be touched, are not live when unmated.

THR soldering	Page 900
Coding	Page 961
See technical section for further information	
Approvals and corresponding ratings, visit www.wago.com	

THR male header ▸ *picoMAX*® 3.5 ▸ 2091 Series

Pin spacing: 3.5 mm / 0.138 inches ▸ Locking of plug-in connection: Locking latch

Mating direction to the PCB: 0 ° ▸ Color: black



2091-1426/200-000

Pole number	Item No.	PU
2	2091-1422/200-604	200
4	2091-1424/200-604	200
6	2091-1426/200-604	100
10	2091-1430/200-604	100

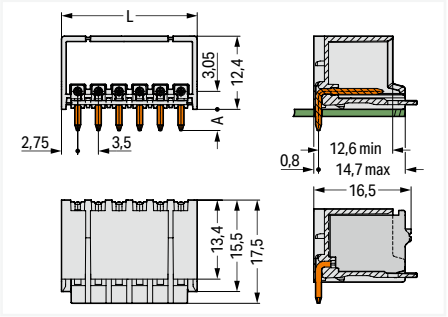

L = (pole no. x pin spacing) + 2.0 mm
A = 3.6 mm THT solder pin
A = 2.4 mm THR solder pin

Mating direction to the PCB: 0 ° ▸ Color: light gray



2091-1426/200-000

Pole number	Item No.	PU
2	2091-1422/200-000	200
3	2091-1423/200-000	200
4	2091-1424/200-000	200
5	2091-1425/200-000	200
6	2091-1426/200-000	100
7	2091-1427/200-000	100
8	2091-1428/200-000	100
10	2091-1430/200-000	100
12	2091-1432/200-000	100

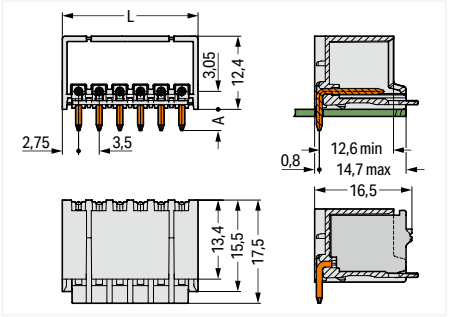

L = (pole no. x pin spacing) + 2.0 mm
A = 3.6 mm THT solder pin
A = 2.4 mm THR solder pin

Mating direction to the PCB: 0 ° ▸ Suitable for automated assembly ▸ Color: light gray



2091-1426

Pole number	Tape width	Item No.	PU
2	32 mm	2091-1422/200-000/997-405	260
3	44 mm	2091-1423/200-000/997-406	170
4	44 mm	2091-1424/200-000/997-406	170
5	44 mm	2091-1425/200-000/997-406	170
6	44 mm	2091-1426/200-000/997-406	170
7	44 mm	2091-1427/200-000/997-406	170
8	44 mm	2091-1428/200-000/997-406	170
10	44 mm	2091-1430/200-000/997-408	170
12	44 mm	2091-1432/200-000/997-408	170

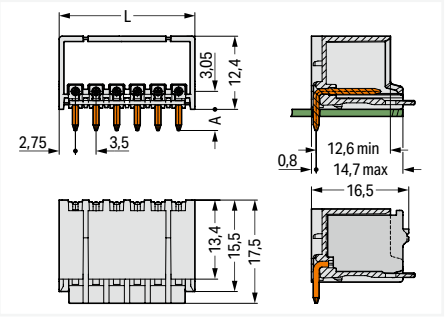

L = (pole no. x pin spacing) + 2.0 mm
A = 3.6 mm THT solder pin
A = 2.4 mm THR solder pin

11

PU = packaging unit; SPU = subpackaging unit; Dimensions in mm

Variants:
- Direct marking
- Tape-and-reel packaging
- Other versions (or variants) can be requested from WAGO Sales or configured at https://configurator.wago.com/.

THR male header ▸ *picoMAX*® 3.5 ▸ 2091 Series

Pin spacing: 3.5 mm / 0.138 inches ▸ Locking of plug-in connection: Locking latch

Mating direction to the PCB: 90 ° ▸ Color: light gray



2091-1406/200-000

Pole number	Item No.	PU
2	**2091-1402/200-000**	200
3	**2091-1403/200-000**	200
4	**2091-1404/200-000**	200
5	**2091-1405/200-000**	200
6	**2091-1406/200-000**	100
7	**2091-1407/200-000**	100
8	**2091-1408/200-000**	100
10	**2091-1410/200-000**	100
12	**2091-1412/200-000**	100

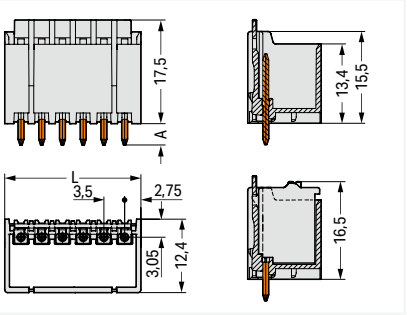

L = (pole no. x pin spacing) + 2.0 mm
A = 3.6 mm THT solder pin
A = 2.4 mm THR solder pin

11

PU = packaging unit; SPU = subpackaging unit; Dimensions in mm

Variants:
- Direct marking
- Tape-and-reel packaging
- Other versions (or variants) can be requested from WAGO Sales or configured at https://configurator.wago.com/.

THR male header ▸ *picoMAX*® 3.5 ▸ 2091 Series

Pin spacing: 3.5 mm / 0.138 inches ▸ Locking of plug-in connection: Locking latch

Mounting type: Feed-through mounting; Panel mounting ▸ Mounting type: Mounting flange ▸ Color: light gray

Mating direction to the PCB: 0 °

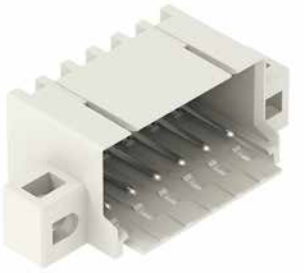

2091-1426/205-000

Pole number	Item No.	PU
2	**2091-1422/205-000**	200
3	**2091-1423/205-000**	200
4	**2091-1424/205-000**	200
5	**2091-1425/205-000**	200
6	**2091-1426/205-000**	100
8	**2091-1428/205-000**	100
10	**2091-1430/205-000**	100
12	**2091-1432/205-000**	100

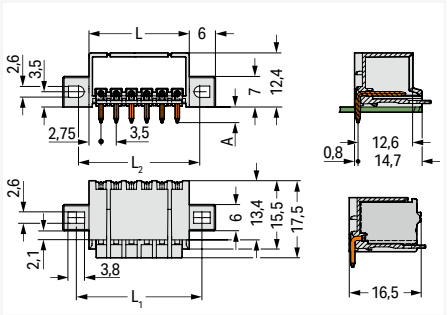

L = (pole no. x pin spacing) + 2 mm
L_1 = (pole no. x pin spacing) + 7.8 mm
L_2 = (pole no. x pin spacing) + 6.8 mm
A = 3.6 mm THT solder pin
A = 2.4 mm THR solder pin

Mating direction to the PCB: 90 °



2091-1406/205-000

Pole number	Item No.	PU
2	**2091-1402/205-000**	200
3	**2091-1403/205-000**	200
4	**2091-1404/205-000**	200
5	**2091-1405/205-000**	200
6	**2091-1406/205-000**	100
8	**2091-1408/205-000**	100
10	**2091-1410/205-000**	100
12	**2091-1412/205-000**	100

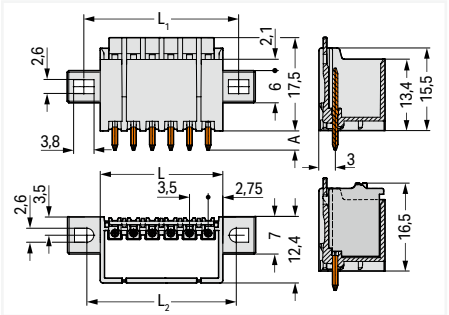

L = (pole no. x pin spacing) + 2.0 mm
L_1 = (pole no. x pin spacing) + 7.8 mm
L_2 = (pole no. x pin spacing) + 6.8 mm
A = 3.6 mm THT solder pin
A = 2.4 mm THR solder pin

11

PU = packaging unit; SPU = subpackaging unit; Dimensions in mm

Variants:
- Direct marking
- Tape-and-reel packaging
- Other versions (or variants) can be requested from WAGO Sales or configured at https://configurator.wago.com/.

THR pin strip ▸ *picoMAX*® 3.5 ▸ 2091 Series

Pin spacing: 3.5 mm / 0.138 inches ▸ Color: black

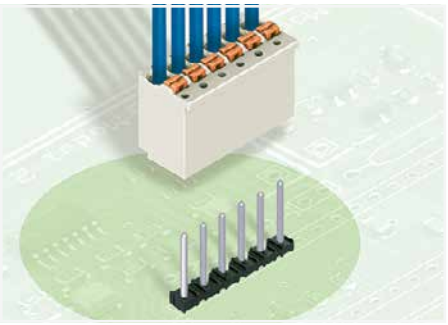

- Solder pin strips may be mounted horizontally or vertically via straight or angled solder pins
- Assembly of female connectors without loss of poles, allowing different functions to be divided within one solder pin strip

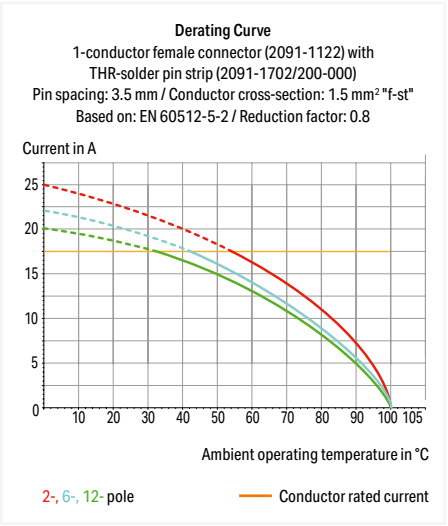

Electrical data			
Ratings per	**IEC/EN 60664-1**		
Overvoltage category	III	III	II
Pollution degree	3	2	2
Nominal voltage	160 V	160 V	320 V
Rated impulse withstand voltage	2.5 kV	2.5 kV	2.5 kV
Rated current	10 A	10 A	10 A

Material data	
Material group	I
Insulation material (main housing)	Polyphthalamide (PPA GF)
Flammability class per UL94	V0
Contact material	Electrolytic copper (E_{Cu})
Contact Plating	Tin

Mechanical data	
Solder pin length	2.4 mm
Solder pin diameter	1 mm
Plated through-hole diameter (THR)	1.2 $^{(+0.1)}$ mm

Environmental requirements	
Limit temperature range	-60 … +100 °C

11

Note:
The **picoMAX® Pluggable Connection System** includes connectors without breaking capacity in accordance with DIN EN 61984. When used as intended, these connectors must not be connected/disconnected when live or under load.When used as intended, these connectors must not be connected/ disconnected when live or under load. The circuit design should ensure header pins, which can be touched, are not live when unmated.

THR soldering Page 900

See technical section for further information

Approvals and corresponding ratings, visit www.wago.com

THR pin strip ▸ *picoMAX*® 3.5 ▸ 2091 Series

Pin spacing: 3.5 mm / 0.138 inches ▸ Color: black

Mating direction to the PCB: 0 °



2091-1726/200-000

Pole number	Item No.	PU
2	**2091-1722/200-000**	400
3	**2091-1723/200-000**	400
5	**2091-1725/200-000**	400
6	**2091-1726/200-000**	400
7	**2091-1727/200-000**	400
8	**2091-1728/200-000**	400
10	**2091-1730/200-000**	300
12	**2091-1732/200-000**	300

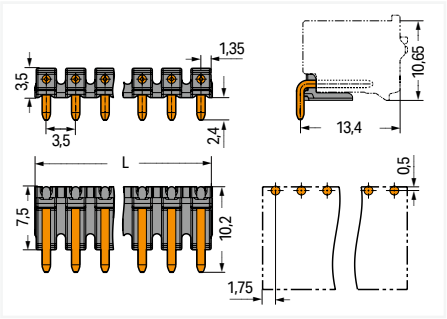

L = (pole no. – 1) x pin spacing + 2.7 mm

Mating direction to the PCB: 90 °



2091-1706/200-000

Pole number	Item No.	PU (SPU)
2	**2091-1702/200-000**	500
3	**2091-1703/200-000**	500
4	**2091-1704/200-000**	500 (1)
5	**2091-1705/200-000**	500
6	**2091-1706/200-000**	500
7	**2091-1707/200-000**	500
8	**2091-1708/200-000**	500
10	**2091-1710/200-000**	400
12	**2091-1712/200-000**	400

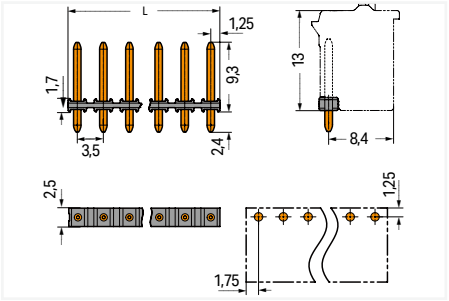

L = (pole no. – 1) x pin spacing + 2.5 mm

PU = packaging unit; SPU = subpackaging unit

Variants:

- Tape-and-reel packaging
- Other versions (or variants) can be requested from WAGO Sales or configured at https://configurator.wago.com/.

Panel feedthrough male connector ▸ *picoMAX*® 3.5 ▸ 2091 Series

Pin spacing: 3.5 mm / 0.138 inches ▸ Mounting type: Feed-through mounting; Panel mounting ▸ Mounting type: Mounting flange ▸ Locking of plug-in connection: Locking latch ▸ Color: light gray



- Male connectors for screw mounting in device or enclosure panels
- External plug-in connection via locking latches to female connectors with conductor terminations
- Internal plug-in connection to female headers with solder pins or female connectors with conductor terminations
- Also available with pre-assembled female connectors on both sides
- Fixing flanges also suitable for panel mounting

Derating Curve
2 x 1-conductor female connector (2091-1126) with panel feedthrough male connector (2091-1636/024-000)
Pin spacing: 3.5 mm / Conductor cross-section: 1.5 mm² "f-st"
Based on: EN 60512-5-2 / Reduction factor: 0.8

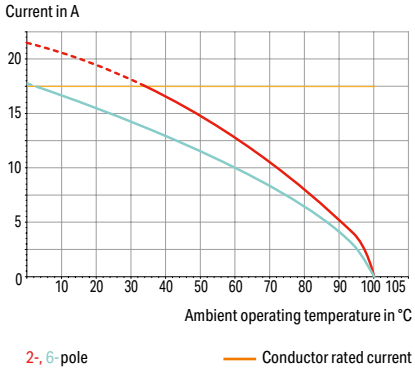

Electrical data			
Ratings per	**IEC/EN 60664-1**		
Overvoltage category	III	III	II
Pollution degree	3	2	2
Nominal voltage	160 V	160 V	320 V
Rated impulse withstand voltage	2.5 kV	2.5 kV	2.5 kV
Rated current	10 A	10 A	10 A
Approvals per	**UL 1059**		
Use group	B	C	D
Rated voltage	300 V	-	300 V
Rated current	10 A	-	10 A

Material data	
Material group	I
Insulation material (main housing)	Polyphthalamide (PPA GF)
Flammability class per UL94	V0
Contact material	Electrolytic copper (E_{Cu})
Contact Plating	Tin

Environmental requirements	
Limit temperature range	-60 … +100 °C
Processing temperature	-35 … +60 °C

11

Note:
The **picoMAX® Pluggable Connection System** includes connectors without breaking capacity in accordance with DIN EN 61984. When used as intended, these connectors must not be connected/disconnected when live or under load.When used as intended, these connectors must not be connected/disconnected when live or under load. The circuit design should ensure header pins, which can be touched, are not live when unmated.

Coding Page 961

See technical section for further information

Approvals and corresponding ratings, visit www.wago.com

Panel feedthrough male connector ▸ *picoMAX*® 3.5 ▸ 2091 Series

Pin spacing: 3.5 mm / 0.138 inches ▸ Mounting type: Feed-through mounting; Panel mounting ▸ Mounting type: Mounting flange ▸ Locking of plug-in connection: Locking latch ▸ Color: light gray



2091-1636/024-000

Pole number	Item No.	PU
2	**2091-1632/024-000**	100
4	**2091-1634/024-000**	100
6	**2091-1636/024-000**	50
8	**2091-1638/024-000**	50

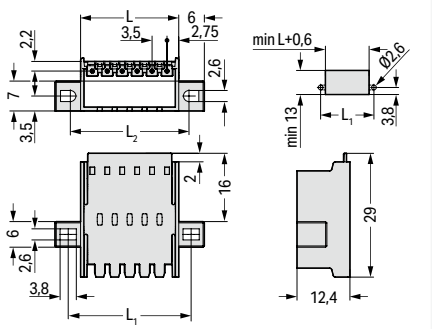

L = (pole no. x pin spacing) + 2.0 mm
L_1 = (pole no. x pin spacing) + 7.8 mm
L_2 = (pole no. x pin spacing) + 6.8 mm

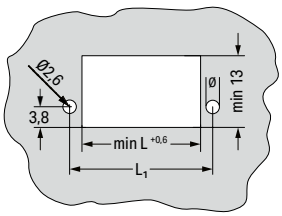

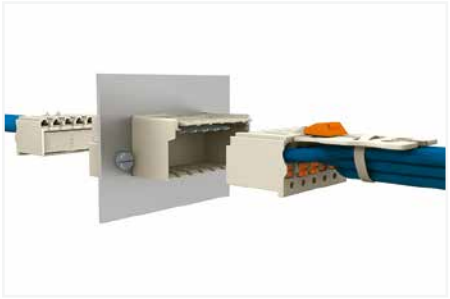

"Wire-to-wire" panel feedthrough connection
Notice: Male connectors must not be live when disconnected!



"Wire-to-board" panel feedthrough connection

PU = packaging unit; SPU = subpackaging unit; Dimensions in mm

1-conductor female connector ▸ *picoMAX*® 5.0 ▸ 2092 Series

Pin spacing: 5 mm / 0.197 inches ▸ Actuation type: Push-button ▸ Push-in CAGE CLAMP® ▸ Color: light gray

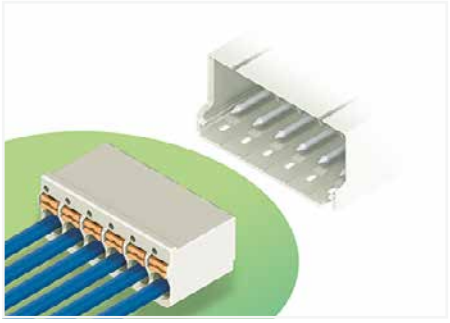

- Universal connection of all conductor types
- Simple, push-in termination of solid and ferruled conductors
- Easy-to-use design does not require special tools
- Ability to wire while mated or unmated
- Testing parallel to conductor entry – tip contact
- Also available with gripping plates
- Integrated locking latches prevent accidental disconnection

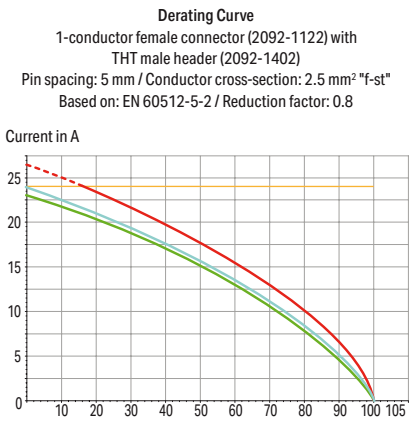

Electrical data			
Ratings per	**IEC/EN 60664-1**		
Overvoltage category	III	III	II
Pollution degree	3	2	2
Nominal voltage	250 V	320 V	630 V
Rated impulse withstand voltage	4 kV	4 kV	4 kV
Rated current	16 A	16 A	16 A
Approvals per	**UL 1059**		
Use group	B	C	D
Rated voltage	300 V	-	300 V
Rated current	15 A	-	10 A

Connection Data	
Connection technology	Push-in CAGE CLAMP®
Strip length	9 … 10 mm / 0.35 … 0.39 inches
Solid conductor	0.2 … 2.5 mm² / 24 … 12 AWG
Fine-stranded conductor	0.2 … 2.5 mm² / 24 … 12 AWG
Fine-stranded conductor; with insulated ferrule	0.25 … 1.5 mm²
Fine-stranded conductor; with uninsulated ferrule	0.25 … 2.5 mm²

Material data	
Material group	I
Insulation material (main housing)	Polyphthalamide (PPA GF)
Flammability class per UL94	V0
Clamping spring material	Chrome-nickel spring steel (CrNi)
Contact material	Electrolytic copper (E_{Cu})
Contact Plating	Tin

Environmental requirements	
Limit temperature range	-60 … +100 °C
Processing temperature	-35 … +60 °C

Note:
The **picoMAX® Pluggable Connection System** includes connectors without breaking capacity in accordance with DIN EN 61984. When used as intended, these connectors must not be connected/disconnected when live or under load.When used as intended, these connectors must not be connected/disconnected when live or under load. The circuit design should ensure header pins, which can be touched, are not live when unmated.
The use of ferrules is recommended for applications with higher requirements.

To prevent excessive force on the clamping point, effective cable strain relief must be used.

Ferrule	Page 1081
Strain relief	Page 962
Test and measurement	Page 1088
Tool	Page 960, 1072
Direct marking	Page 958
See technical section for further information	
Approvals and corresponding ratings, visit www.wago.com	

1-conductor female connector ▸ *picoMAX*® 5.0 ▸ 2092 Series

Pin spacing: 5 mm / 0.197 inches ▸ Actuation type: Push-button ▸ Push-in CAGE CLAMP® ▸ Color: light gray



2092-1126

Pole number	Item No.	PU
2	**2092-1122**	200
3	**2092-1123**	200
4	**2092-1124**	200
5	**2092-1125**	200
6	**2092-1126**	100
7	**2092-1127**	100
8	**2092-1128**	100
9	**2092-1129**	100
10	**2092-1130**	100
12	**2092-1132**	50

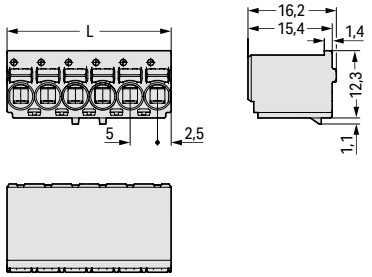

L = pole no. x pin spacing



Disconnecting a female connector via unlocking tool. Plug unlocking tool into the male header's locking latch.

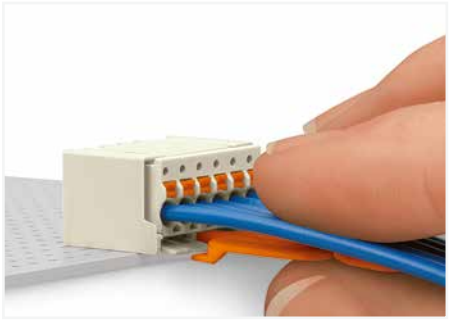

Insert unlocking tool until it hits the backstop. Wedge opens locking latches.



Pull on both unlocking tool and conductors to remove female connector from male header.

11

PU = packaging unit; SPU = subpackaging unit; Dimensions in mm

Variants:

- Direct marking
- Other versions (or variants) can be requested from WAGO Sales or configured at https://configurator.wago.com/.

1-conductor female connector ▸ *picoMAX*® 5.0 ▸ 2092 Series

Pin spacing: 5 mm / 0.197 inches ▸ Actuation type: Push-button ▸ Push-in CAGE CLAMP® ▸ Color: light gray

with gripping plate and sliding connector release



2092-1106/002-000

Pole number	Item No.	PU
2	**2092-1102/002-000**	100
3	**2092-1103/002-000**	100
4	**2092-1104/002-000**	100
5	**2092-1105/002-000**	50
6	**2092-1106/002-000**	50
7	**2092-1107/002-000**	50
8	**2092-1108/002-000**	50
9	**2092-1109/002-000**	50
10	**2092-1110/002-000**	50
12	**2092-1112/002-000**	50

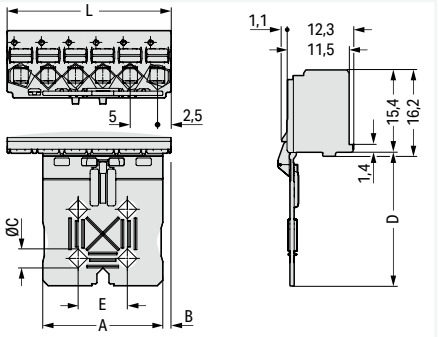

Pole No.	A	B	C	D	E
2	7	1.5	–	20	–
3	12	1.5	–	20	–
4	12	1.5	–	20	–
5	22	1.5	3.5	25	9
6	22	1.5	3.5	25	9
7	22	6.5	3.5	25	9
8	22	6.5	3.5	25	9
9	42	1.5	5.0	35	19
10	42	1.5	5.0	35	19
12	42	6.5	5.0	35	19

L = pole no. x pin spacing

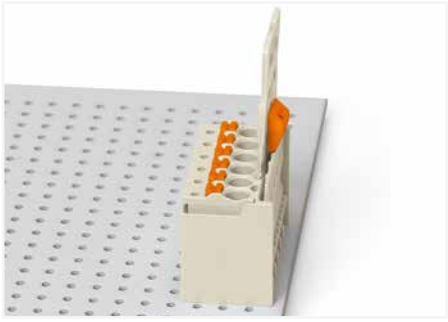

Male header mated to a female connector with gripping plate and sliding connector release.

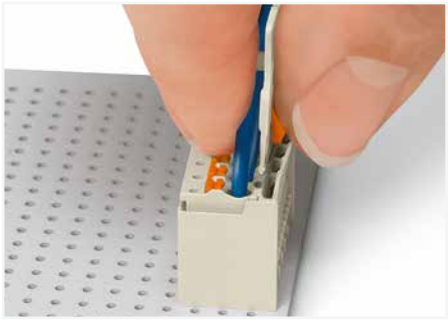

Push down sliding connector release (gripping plate) to open the locking latch.

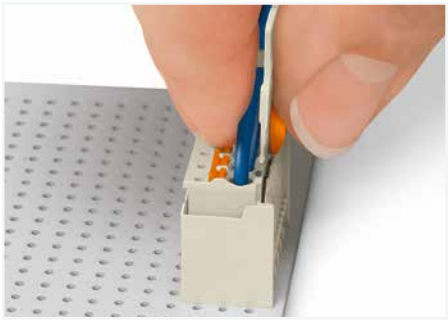

Pull out female connector from male header.

PU = packaging unit; SPU = subpackaging unit; Dimensions in mm

Variants:

- Direct marking
- Other versions (or variants) can be requested from WAGO Sales or configured at https://configurator.wago.com/.

1-conductor female connector ▸ *picoMAX*® 5.0 ▸ 2092 Series

Pin spacing: 5 mm / 0.197 inches ▸ Actuation type: Push-button ▸ Push-in CAGE CLAMP® ▸ Color: light gray

with gripping plate



2092-1106

Pole number	Item No.	PU
2	**2092-1102**	100
3	**2092-1103**	100
4	**2092-1104**	100
5	**2092-1105**	50
6	**2092-1106**	50
7	**2092-1107**	50
8	**2092-1108**	50
9	**2092-1109**	50
10	**2092-1110**	50
12	**2092-1112**	50

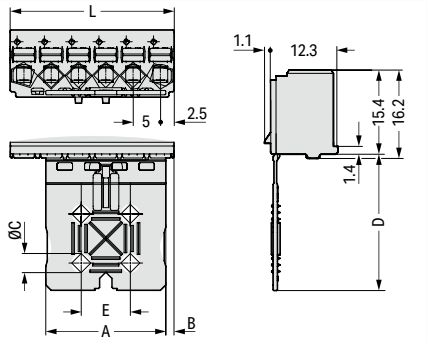

Pole No.	A	B	C	D	E
2	7	1.5	–	20	–
3	12	1.5	–	20	–
4	12	1.5	–	20	–
5	22	1.5	3.5	25	9
6	22	1.5	3.5	25	9
7	22	6.5	3.5	25	9
8	22	6.5	3.5	25	9
9	42	1.5	5.0	35	19
10	42	1.5	5.0	35	19
12	42	6.5	5.0	35	19

L = pole no. x pin spacing

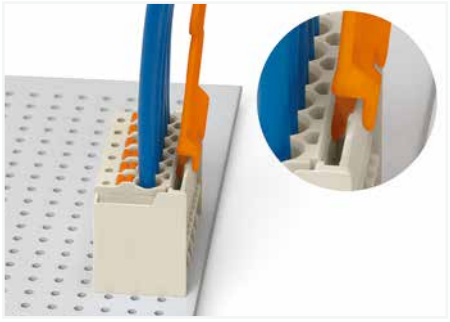

Disconnecting a female connector via unlocking tool. Plug unlocking tool into the male header's locking latch.

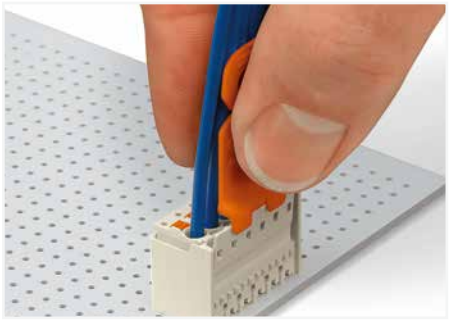

Insert unlocking tool until it hits the backstop. Wedge opens locking latches.

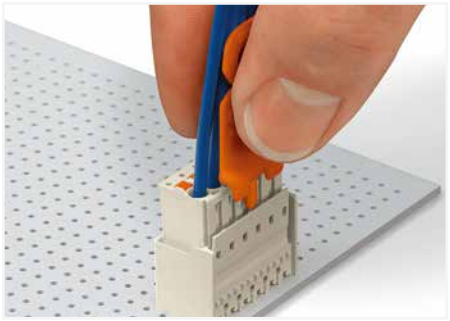

Pull on both unlocking tool and conductors to remove female connector from male header.

PU = packaging unit; SPU = subpackaging unit; Dimensions in mm

Variants:

- Direct marking
- Other versions (or variants) can be requested from WAGO Sales or configured at https://configurator.wago.com/.

1-conductor male connector ▸ *picoMAX*® 5.0 ▸ 2092 Series

Pin spacing: 5 mm / 0.197 inches ▸ Actuation type: Push-button ▸ Push-in CAGE CLAMP® ▸ Locking of plug-in connection: Locking latch ▸ Color: light gray

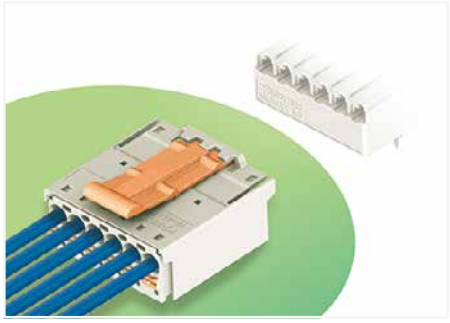

- Universal connection for all conductor types
- Simple, push-in termination of solid and ferruled conductors
- Easy-to-use design does not require special tools
- Testing parallel to conductor entry – tip contact
- For “wire-to-wire” and “board-to-wire” connections
- Integrated release lever

Derating Curve
1-conductor female connector (2092-1126) with
1-conductor male connector (2092-1526/002-000)
Pin spacing: 5 mm / Conductor cross-section: 2.5 mm² "f-st"
Based on: EN 60512-5-2 / Reduction factor: 0.8

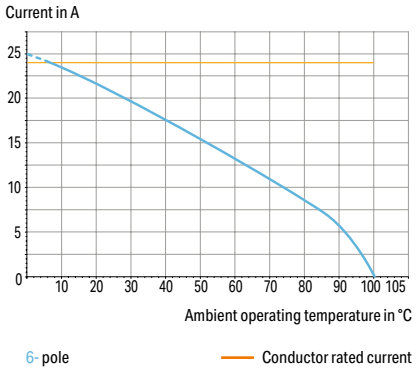

Electrical data			
Ratings per	**IEC/EN 60664-1**		
Overvoltage category	III	III	II
Pollution degree	3	2	2
Nominal voltage	250 V	320 V	630 V
Rated impulse withstand voltage	4 kV	4 kV	4 kV
Rated current	16 A	16 A	16 A
Approvals per	**UL 1059**		
Use group	B	C	D
Rated voltage	300 V	-	300 V
Rated current	15 A	-	10 A

Connection Data	
Connection technology	Push-in CAGE CLAMP®
Strip length	9 … 10 mm / 0.35 … 0.39 inches
Solid conductor	0.2 … 2.5 mm² / 24 … 12 AWG
Fine-stranded conductor	0.2 … 2.5 mm² / 24 … 12 AWG
Fine-stranded conductor; with insulated ferrule	0.25 … 1.5 mm²
Fine-stranded conductor; with uninsulated ferrule	0.25 … 2.5 mm²

Material data	
Material group	I
Insulation material (main housing)	Polyphthalamide (PPA GF)
Flammability class per UL94	V0
Clamping spring material	Chrome-nickel spring steel (CrNi)
Contact material	Electrolytic copper (E_{Cu})
Contact Plating	Tin

Environmental requirements	
Limit temperature range	-60 … +100 °C
Processing temperature	-35 … +60 °C

Note:
The **picoMAX® Pluggable Connection System** includes connectors without breaking capacity in accordance with DIN EN 61984. When used as intended, these connectors must not be connected/disconnected when live or under load.When used as intended, these connectors must not be connected/ disconnected when live or under load. The circuit design should ensure header pins, which can be touched, are not live when unmated.
The use of ferrules is recommended for applications with higher requirements.

To prevent excessive force on the clamping point, effective cable strain relief must be used.

Ferrule	Page 1081
Test and measurement	Page 1088
Tool	Page 1072
Direct marking	Page 958
See technical section for further information	
Approvals and corresponding ratings, visit www.wago.com	

1-conductor male connector ▸ *picoMAX*® 5.0 ▸ 2092 Series

Pin spacing: 5 mm / 0.197 inches ▸ Actuation type: Push-button ▸ Push-in CAGE CLAMP® ▸ Locking of plug-in connection: Locking latch ▸ Color: light gray

	with gripping plate	Mounting type: Snap-in foot







2092-1526/002-000

Pole number	Item No.	PU
2	**2092-1522/002-000**	200
3	**2092-1523/002-000**	100
4	**2092-1524/002-000**	100
5	**2092-1525/002-000**	100
6	**2092-1526/002-000**	100

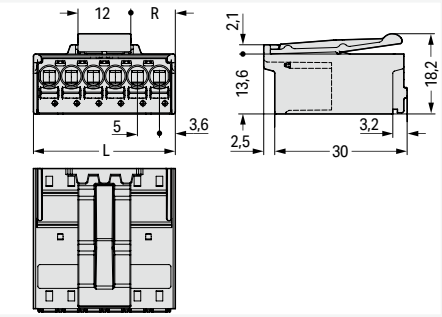

L = (pole no. x pin spacing) + 2.2 mm
Even pole number R = (L – 12 mm) : 2
Odd pole number R = (L – 17 mm) : 2

2092-1506/002-000

Pole number	Item No.	PU
2	**2092-1502/002-000**	100
3	**2092-1503/002-000**	100
4	**2092-1504/002-000**	50
5	**2092-1505/002-000**	50
6	**2092-1506/002-000**	50

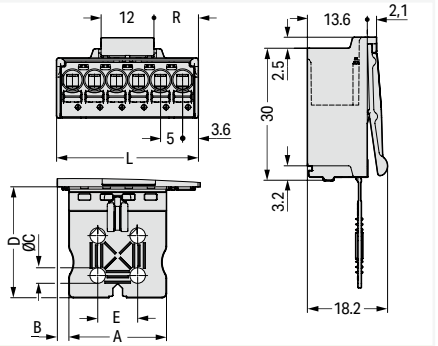

Pole No.	A	B	C	D	E
2	7	2.6	–	20	–
3	12	2.6	–	20	–
4	12	2.6	–	20	–
5	22	2.6	3.5	25	9
6	22	2.6	3.5	25	9

L = (pole no. x pin spacing) + 2.2 mm
Even pole number R = (L – 12 mm) : 2
Odd pole number R = (L – 17 mm) : 2

2092-1526/020-000

Pole number	Item No.	PU
2	**2092-1522/020-000**	200
3	**2092-1523/020-000**	100
4	**2092-1524/020-000**	100
5	**2092-1525/020-000**	100
6	**2092-1526/020-000**	50

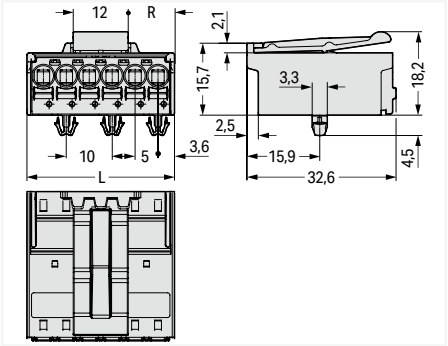

L = (pole no. x pin spacing) + 2.2 mm
Even pole number R = (L – 12 mm) : 2
Odd pole number R = (L – 17 mm) : 2

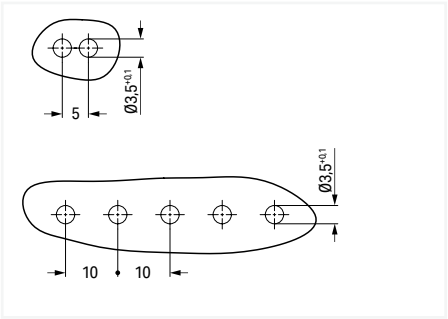

PU = packaging unit; SPU = subpackaging unit; Dimensions in mm

Variants:
- Direct marking
- Other versions (or variants) can be requested from WAGO Sales or configured at https://configurator.wago.com/.

THT female header ▸ *picoMAX*® 5.0 ▸ 2092 Series

Pin spacing: 5 mm / 0.197 inches ▸ Color: light gray

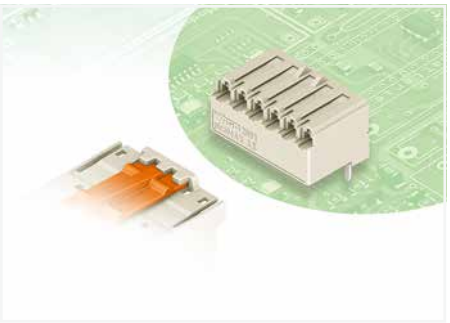

- Touch-proof PCB outputs
- Easy-to-identify PCB inputs and outputs
- Coding option available

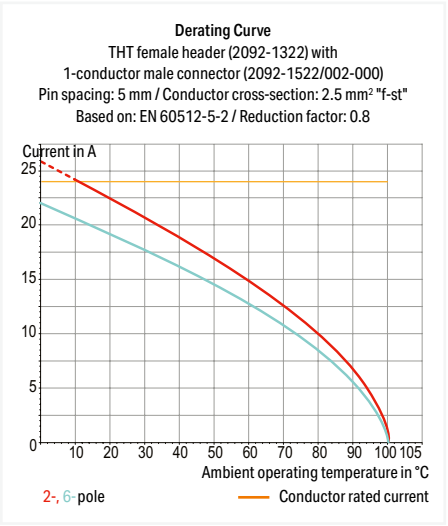

Electrical data			
Ratings per	**IEC/EN 60664-1**		
Overvoltage category	III	III	II
Pollution degree	3	2	2
Nominal voltage	250 V	320 V	630 V
Rated impulse withstand voltage	4 kV	4 kV	4 kV
Rated current	16 A	16 A	16 A
Approvals per	**UL 1059**		
Use group	B	C	D
Rated voltage	300 V	-	300 V
Rated current	15 A	-	10 A

Material data	
Material group	I
Insulation material (main housing)	Polyphthalamide (PPA GF)
Flammability class per UL94	V0
Contact material	Copper alloy
Contact Plating	Tin

Mechanical data	
Solder pin length	3.6 mm
Solder pin dimensions	0.4 x 1.3 mm
Drilled hole diameter	1.5 $^{(+0.1)}$ mm

Environmental requirements	
Limit temperature range	-60 … +100 °C
Processing temperature	-35 … +60 °C

Note:
The **picoMAX® Pluggable Connection System** includes connectors without breaking capacity in accordance with DIN EN 61984. When used as intended, these connectors must not be connected/disconnected when live or under load.When used as intended, these connectors must not be connected/ disconnected when live or under load. The circuit design should ensure header pins, which can be touched, are not live when unmated.

Coding Page 961

See technical section for further information

Approvals and corresponding ratings, visit www.wago.com

THT female header ▸ *picoMAX*® 5.0 ▸ 2092 Series

Pin spacing: 5 mm / 0.197 inches ▸ Color: light gray

Mating direction to the PCB: 0 °



2092-1326

Pole number	Item No.	PU
2	**2092-1322**	200
3	**2092-1323**	200
4	**2092-1324**	200
5	**2092-1325**	100
6	**2092-1326**	100

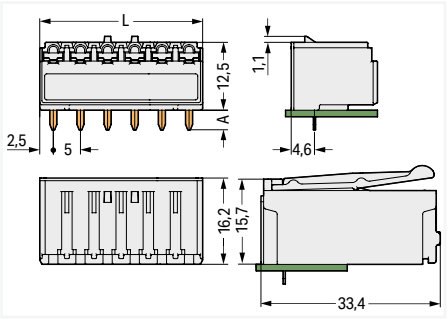

L = pole no. x pin spacing
A = 3.6 mm THT solder pin
A = 2.4 mm THR solder pin

Mating direction to the PCB: 90 °



2092-1306

Pole number	Item No.	PU
2	**2092-1302**	200
3	**2092-1303**	200
4	**2092-1304**	200
5	**2092-1305**	100
6	**2092-1306**	100

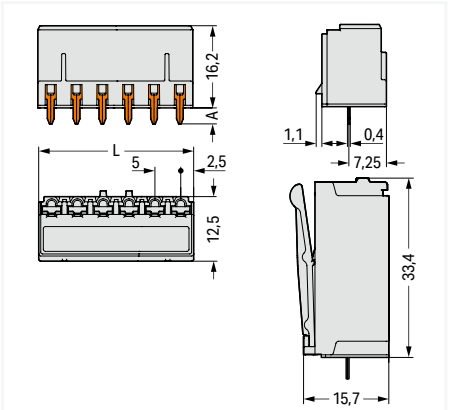

L = pole no. x pin spacing
A = 3.6 mm THT solder pin
A = 2.4 mm THR solder pin

11

PU = packaging unit; SPU = subpackaging unit; Dimensions in mm

THT male header ▸ *picoMAX*® 5.0 ▸ 2092 Series

Pin spacing: 5 mm / 0.197 inches ▸ Locking of plug-in connection: Locking latch ▸ Color: light gray

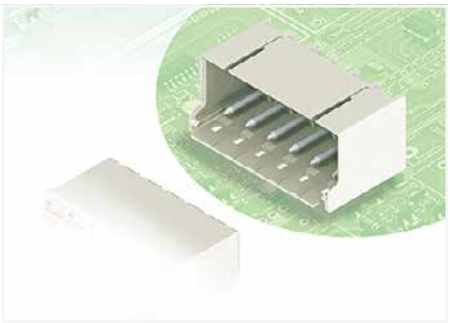

- Modular assembly of multiple female connectors without pole loss within one male header, enabling separation of functions (≥ 4 poles)
- Coding pins integrated in the header interface prevent mismating and allow retroactive coding in panel feedthrough applications
- Female connector deeply embedded in the header housing for 8 g vibration resistance with ferrules

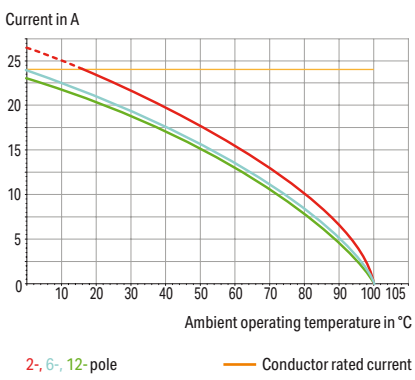

Electrical data			
Ratings per	**IEC/EN 60664-1**		
Overvoltage category	III	III	II
Pollution degree	3	2	2
Nominal voltage	250 V	320 V	630 V
Rated impulse withstand voltage	4 kV	4 kV	4 kV
Rated current	16 A	16 A	16 A
Approvals per	**UL 1059**		
Use group	B	C	D
Rated voltage	300 V	-	300 V
Rated current	15 A	-	10 A

Material data	
Material group	I
Insulation material (main housing)	Polyphthalamide (PPA GF)
Flammability class per UL94	V0
Contact material	Electrolytic copper (E_{Cu})
Contact Plating	Tin

Mechanical data	
Solder pin length	3.6 mm
Solder pin diameter	1.4 mm
Drilled hole diameter	1.6 $^{(+0.1)}$ mm

Environmental requirements	
Limit temperature range	-60 … +100 °C
Processing temperature	-35 … +60 °C

Note:
The **picoMAX® Pluggable Connection System** includes connectors without breaking capacity in accordance with DIN EN 61984. When used as intended, these connectors must not be connected/disconnected when live or under load.When used as intended, these connectors must not be connected/disconnected when live or under load. The circuit design should ensure header pins, which can be touched, are not live when unmated.

Coding Page 961

See technical section for further information

Approvals and corresponding ratings, visit www.wago.com

THT male header ▸ *picoMAX*® 5.0 ▸ 2092 Series

Pin spacing: 5 mm / 0.197 inches ▸ Locking of plug-in connection: Locking latch ▸ Color: light gray

Mating direction to the PCB: 0 °



2092-1426

Pole number	Item No.	PU
2	**2092-1422**	200
3	**2092-1423**	200
4	**2092-1424**	200
5	**2092-1425**	200
6	**2092-1426**	100
7	**2092-1427**	100
8	**2092-1428**	100
9	**2092-1429**	100
10	**2092-1430**	100
12	**2092-1432**	100

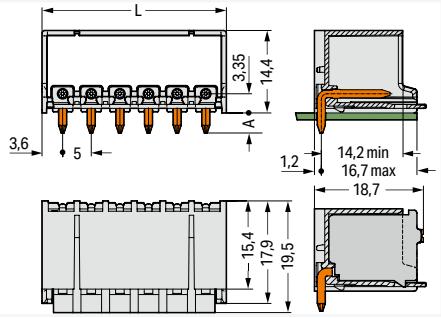

L = (pole no. x pin spacing) + 2.2 mm
A = 3.6 mm THT solder pin
A = 2.4 mm THR solder pin

Mating direction to the PCB: 90 °



2092-1406

Pole number	Item No.	PU
2	**2092-1402**	200
3	**2092-1403**	200
4	**2092-1404**	200
5	**2092-1405**	200
6	**2092-1406**	100
7	**2092-1407**	100
8	**2092-1408**	100
9	**2092-1409**	100
10	**2092-1410**	100
12	**2092-1412**	100

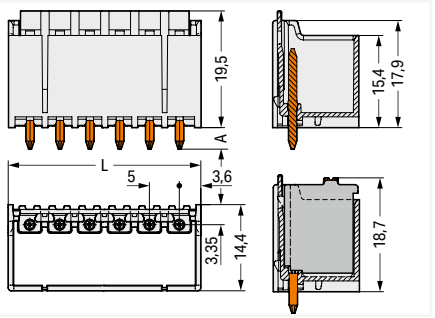

L = (pole no. x pin spacing) + 2.2 mm
A = 3.6 mm THT solder pin
A = 2.4 mm THR solder pin

11

PU = packaging unit; SPU = subpackaging unit; Dimensions in mm

Variants:

- Direct marking
- Other versions (or variants) can be requested from WAGO Sales or configured at https://configurator.wago.com/.

THT male header ▸ *picoMAX*® 5.0 ▸ 2092 Series

Pin spacing: 5 mm / 0.197 inches ▸ Locking of plug-in connection: Locking latch ▸ Color: light gray

Mounting type: Feed-through mounting; Panel mounting ▸ Mounting type: Mounting flange

Mating direction to the PCB: 0 °



2092-1426/005-000

Pole number	Item No.	PU
2	**2092-1422/005-000**	200
3	**2092-1423/005-000**	200
4	**2092-1424/005-000**	200
5	**2092-1425/005-000**	100
6	**2092-1426/005-000**	100
8	**2092-1428/005-000**	100
10	**2092-1430/005-000**	100
12	**2092-1432/005-000**	100

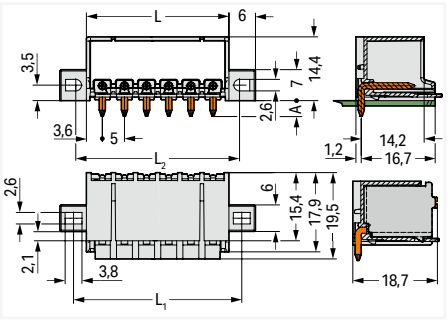

L = (pole no. x pin spacing) + 2.2 mm
L_1 = (pole no. x pin spacing) + 8 mm
L_2 = (pole no. x pin spacing) + 7 mm
A = 3.6 mm THT solder pin
A = 2.4 mm THR solder pin

Mating direction to the PCB: 90 °



2092-1406/005-000

Pole number	Item No.	PU
2	**2092-1402/005-000**	200
3	**2092-1403/005-000**	200
4	**2092-1404/005-000**	200
5	**2092-1405/005-000**	200
6	**2092-1406/005-000**	100
8	**2092-1408/005-000**	100
10	**2092-1410/005-000**	100
12	**2092-1412/005-000**	100

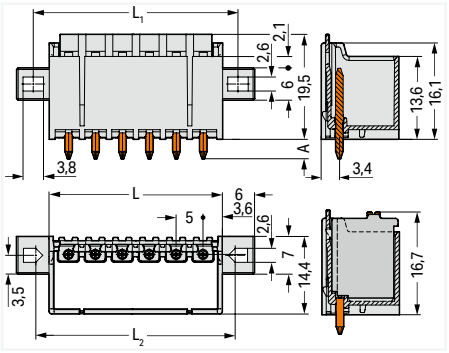

L = (pole no. x pin spacing) + 2.2 mm
L_1 = (pole no. x pin spacing) + 8 mm
L_2 = (pole no. x pin spacing) + 7 mm
A = 3.6 mm THT solder pin
A = 2.4 mm THR solder pin

11

PU = packaging unit; SPU = subpackaging unit; Dimensions in mm

Variants:
- Direct marking
- Other versions (or variants) can be requested from WAGO Sales or configured at https://configurator.wago.com/.

THT pin strip ▸ *picoMAX*® 5.0 ▸ 2092 Series

Pin spacing: 5 mm / 0.197 inches ▸ Color: black

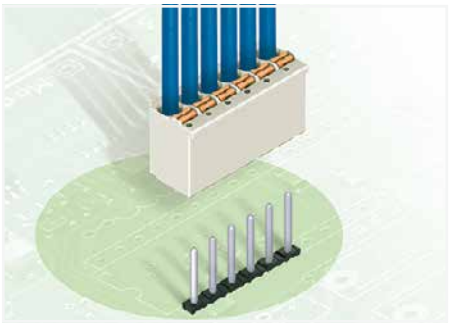

- Solder pin strips may be mounted horizontally or vertically via straight or angled solder pins
- Assembly of female connectors without loss of poles, allowing different functions to be divided within one solder pin strip

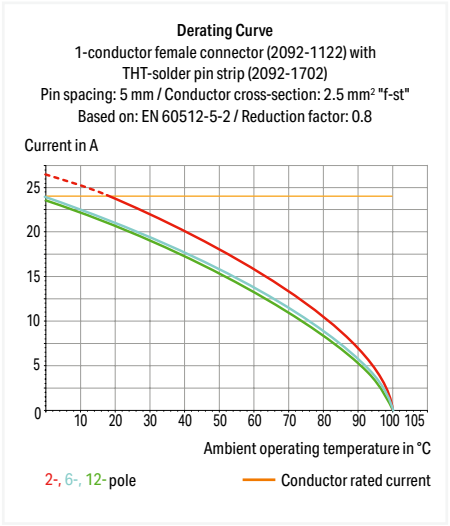

Electrical data			
Ratings per	**IEC/EN 60664-1**		
Overvoltage category	III	III	II
Pollution degree	3	2	2
Nominal voltage	250 V	320 V	630 V
Rated impulse withstand voltage	4 kV	4 kV	4 kV
Rated current	16 A	16 A	16 A

Material data	
Material group	I
Insulation material (main housing)	Polyphthalamide (PPA GF)
Flammability class per UL94	V0
Contact material	Electrolytic copper (E_{Cu})
Contact Plating	Tin

Mechanical data	
Solder pin length	3.6 mm
Solder pin diameter	1.4 mm
Drilled hole diameter	1.6 $^{(+0.1)}$ mm

Environmental requirements	
Limit temperature range	-60 … +100 °C

Note:
The **picoMAX® Pluggable Connection System** includes connectors without breaking capacity in accordance with DIN EN 61984. When used as intended, these connectors must not be connected/disconnected when live or under load.When used as intended, these connectors must not be connected/disconnected when live or under load. The circuit design should ensure header pins, which can be touched, are not live when unmated.

See technical section for further information

Approvals and corresponding ratings, visit www.wago.com

THT pin strip ▸ *picoMAX*® 5.0 ▸ 2092 Series

Pin spacing: 5 mm / 0.197 inches ▸ Color: black

Mating direction to the PCB: 0 °



2092-1726

Pole number	Item No.	PU
2	2092-1722	300
3	2092-1723	300
4	2092-1724	300
5	2092-1725	300
6	2092-1726	300
7	2092-1727	300
8	2092-1728	300
9	2092-1729	300
10	2092-1730	200
12	2092-1732	200

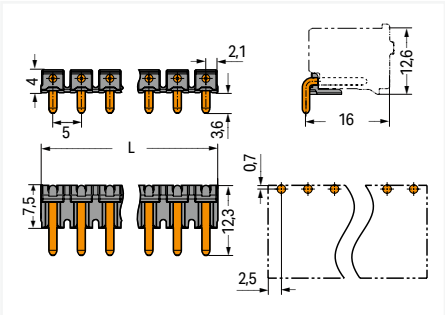

L = (pole no. – 1) x pin spacing + 4.2 mm

Mating direction to the PCB: 90 °



2092-1706

Pole number	Item No.	PU
2	2092-1702	400
3	2092-1703	400
4	2092-1704	400
5	2092-1705	400
6	2092-1706	400
7	2092-1707	400
8	2092-1708	400
9	2092-1709	300
10	2092-1710	300
12	2092-1712	300

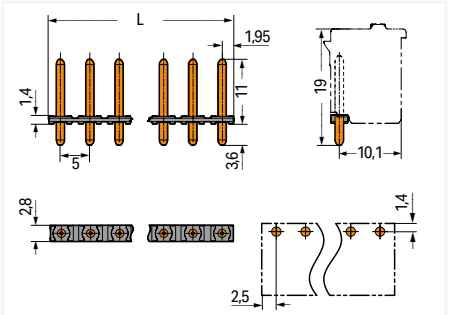

L = (pole no. – 1) x pin spacing + 3.9 mm

11

PU = packaging unit; SPU = subpackaging unit; Dimensions in mm

THR female header ▸ *picoMAX*® 5.0 ▸ 2092 Series

Pin spacing: 5 mm / 0.197 inches ▸ Color: light gray

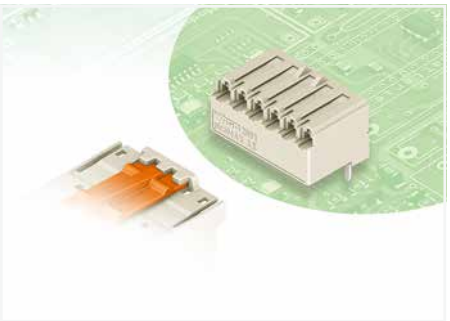

- Modular assembly of multiple female connectors without pole loss within one male header, enabling separation of functions (≥ 4 poles)
- Coding pins integrated in the header interface prevent mismating and allow retroactive coding in panel feedthrough applications

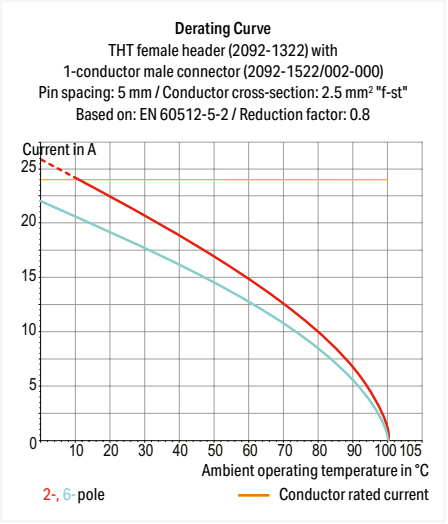

Electrical data			
Ratings per	**IEC/EN 60664-1**		
Overvoltage category	III	III	II
Pollution degree	3	2	2
Nominal voltage	250 V	320 V	630 V
Rated impulse withstand voltage	4 kV	4 kV	4 kV
Rated current	16 A	16 A	16 A
Approvals per	**UL 1059**		
Use group	B	C	D
Rated voltage	300 V	-	300 V
Rated current	15 A	-	10 A

Material data	
Material group	I
Insulation material (main housing)	Polyphthalamide (PPA GF)
Flammability class per UL94	V0
Contact material	Copper alloy
Contact Plating	Tin

Mechanical data	
Solder pin length	2.4 mm
Solder pin dimensions	0.4 x 1.3 mm
Plated through-hole diameter (THR)	1.5 $^{(+0.1)}$ mm

Environmental requirements	
Limit temperature range	-60 … +100 °C
Processing temperature	-35 … +60 °C

Note:
The **picoMAX® Pluggable Connection System** includes connectors without breaking capacity in accordance with DIN EN 61984. When used as intended, these connectors must not be connected/disconnected when live or under load.When used as intended, these connectors must not be connected/disconnected when live or under load. The circuit design should ensure header pins, which can be touched, are not live when unmated.

THR soldering	Page 900
Coding	Page 961
See technical section for further information	
Approvals and corresponding ratings, visit www.wago.com	

THR female header ▸ *picoMAX*® 5.0 ▸ 2092 Series

Pin spacing: 5 mm / 0.197 inches ▸ Color: light gray

Mating direction to the PCB: 0 °



2092-1326/200-000

Pole number	Item No.	PU
2	**2092-1322/200-000**	200
3	**2092-1323/200-000**	200
4	**2092-1324/200-000**	200
5	**2092-1325/200-000**	100
6	**2092-1326/200-000**	100

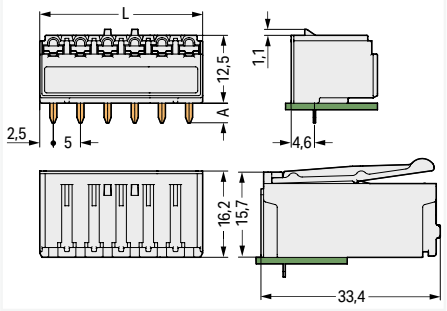

L = pole no. x pin spacing
A = 3.6 mm THT solder pin
A = 2.4 mm THR solder pin

Mating direction to the PCB: 90 °



2092-1306/200-000

Pole number	Item No.	PU
2	**2092-1302/200-000**	200
3	**2092-1303/200-000**	200
4	**2092-1304/200-000**	200
5	**2092-1305/200-000**	100
6	**2092-1306/200-000**	100

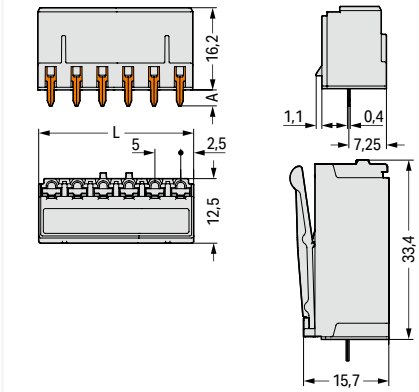

L = pole no. x pin spacing
A = 3.6 mm THT solder pin
A = 2.4 mm THR solder pin

11

PU = packaging unit; SPU = subpackaging unit; Dimensions in mm

THR male header ▸ *picoMAX*® 5.0 ▸ 2092 Series

Pin spacing: 5 mm / 0.197 inches ▸ Locking of plug-in connection: Locking latch ▸ Color: light gray

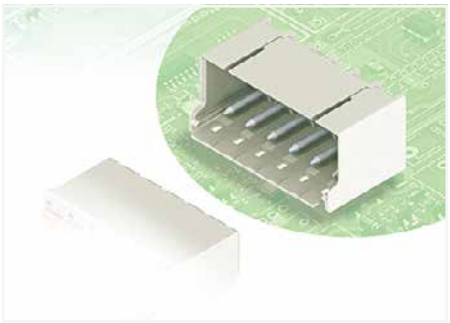

- Assembly of female connectors without loss of poles, allowing different functions to be divided within one male header (≥ 4 poles)
- Coding pins inserted into the header interface prevent mismating, allowing subsequent coding in panel feedthrough applications
- The female connector is fully shrouded by the male header's housing, providing vibration resistance for 8 g with ferrule

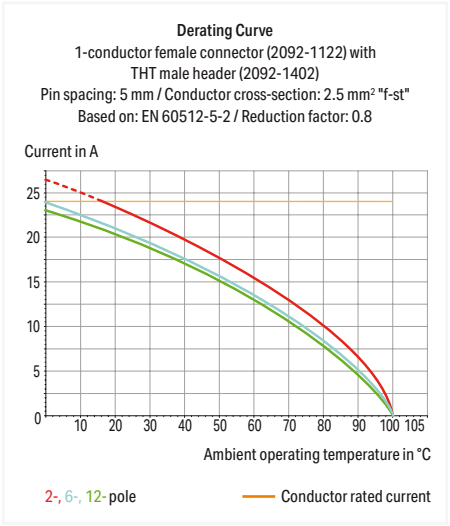

Electrical data			
Ratings per	**IEC/EN 60664-1**		
Overvoltage category	III	III	II
Pollution degree	3	2	2
Nominal voltage	250 V	320 V	630 V
Rated impulse withstand voltage	4 kV	4 kV	4 kV
Rated current	16 A	16 A	16 A
Approvals per	**UL 1059**		
Use group	B	C	D
Rated voltage	300 V	-	300 V
Rated current	15 A	-	10 A

Material data	
Material group	I
Insulation material (main housing)	Polyphthalamide (PPA GF)
Flammability class per UL94	V0
Contact material	Electrolytic copper (E_{Cu})
Contact Plating	Tin

Mechanical data	
Solder pin length	2.4 mm
Solder pin diameter	1.4 mm
Plated through-hole diameter (THR)	1.6 $^{(+0.1)}$ mm

Environmental requirements	
Limit temperature range	-60 … +100 °C
Processing temperature	-35 … +60 °C

11

Note:
The **picoMAX® Pluggable Connection System** includes connectors without breaking capacity in accordance with DIN EN 61984. When used as intended, these connectors must not be connected/disconnected when live or under load.When used as intended, these connectors must not be connected/disconnected when live or under load. The circuit design should ensure header pins, which can be touched, are not live when unmated.

THR soldering	Page 900
Coding	Page 961
See technical section for further information	
Approvals and corresponding ratings, visit www.wago.com	

THR male header ▸ *picoMAX*® 5.0 ▸ 2092 Series

Pin spacing: 5 mm / 0.197 inches ▸ Locking of plug-in connection: Locking latch ▸ Color: light gray

Mating direction to the PCB: 0 °



2092-1426/200-000

Pole number	Item No.	PU
2	2092-1422/200-000	200
3	2092-1423/200-000	200
4	2092-1424/200-000	200
5	2092-1425/200-000	200
6	2092-1426/200-000	100
7	2092-1427/200-000	100
8	2092-1428/200-000	100
9	2092-1429/200-000	100
10	2092-1430/200-000	100
12	2092-1432/200-000	100

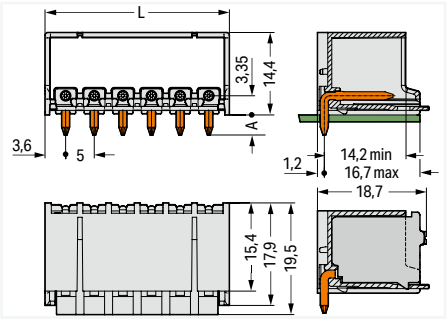

L = (pole no. x pin spacing) + 2.2 mm
A = 3.6 mm THT solder pin
A = 2.4 mm THR solder pin

Mating direction to the PCB: 90 °



2092-1406/200-000

Pole number	Item No.	PU
2	2092-1402/200-000	200
3	2092-1403/200-000	200
4	2092-1404/200-000	200
5	2092-1405/200-000	200
6	2092-1406/200-000	100
8	2092-1408/200-000	100
10	2092-1410/200-000	100
12	2092-1412/200-000	100

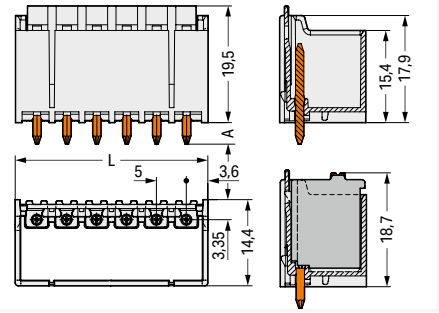

L = (pole no. x pin spacing) + 2.2 mm
A = 3.6 mm THT solder pin
A = 2.4 mm THR solder pin

11

PU = packaging unit; SPU = subpackaging unit; Dimensions in mm

Variants:
- Direct marking
- Tape-and-reel packaging
- Other versions (or variants) can be requested from WAGO Sales or configured at https://configurator.wago.com/.

THR male header ▸ *picoMAX*® 5.0 ▸ 2092 Series

Pin spacing: 5 mm / 0.197 inches ▸ Locking of plug-in connection: Locking latch ▸ Color: light gray

Mounting type: Feed-through mounting; Panel mounting ▸ Mounting type: Mounting flange

Mating direction to the PCB: 0 °



2092-1425/205-000

Pole number	Item No.	PU
2	**2092-1422/205-000**	200
3	**2092-1423/205-000**	200
4	**2092-1424/205-000**	200
5	**2092-1425/205-000**	100

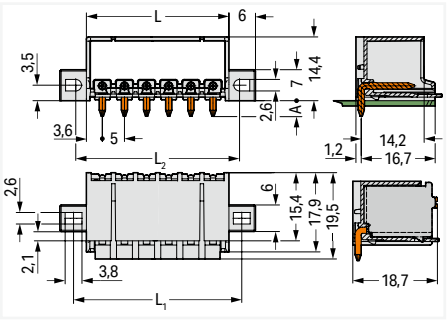

L = (pole no. x pin spacing) + 2.2 mm
L_1 = (pole no. x pin spacing) + 8 mm
L_2 = (pole no. x pin spacing) + 7 mm
A = 3.6 mm THT solder pin
A = 2.4 mm THR solder pin

Mating direction to the PCB: 90 °



2092-1405/205-000

Pole number	Item No.	PU
2	**2092-1402/205-000**	200
3	**2092-1403/205-000**	200
4	**2092-1404/205-000**	200
5	**2092-1405/205-000**	200

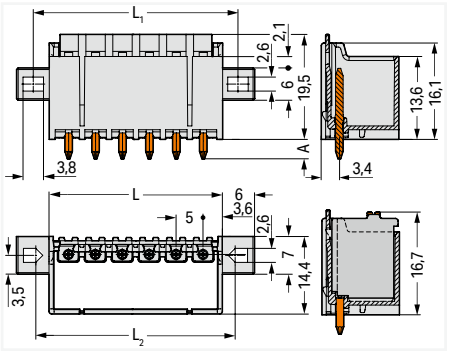

L = (pole no. x pin spacing) + 2.2 mm
L_1 = (pole no. x pin spacing) + 8 mm
L_2 = (pole no. x pin spacing) + 7 mm
A = 3.6 mm THT solder pin
A = 2.4 mm THR solder pin

11

PU = packaging unit; SPU = subpackaging unit; Dimensions in mm

Variants:
- Direct marking
- Tape-and-reel packaging
- Other versions (or variants) can be requested from WAGO Sales or configured at https://configurator.wago.com/.

THR pin strip ▸ *picoMAX*® 5.0 ▸ 2092 Series

Pin spacing: 5 mm / 0.197 inches ▸ Color: black

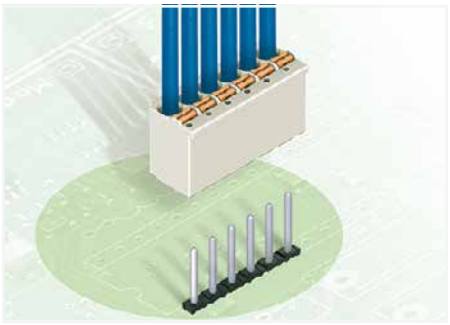

- Solder pin strips may be mounted horizontally or vertically via straight or angled solder pins
- Assembly of female connectors without loss of poles, allowing different functions to be divided within one solder pin strip

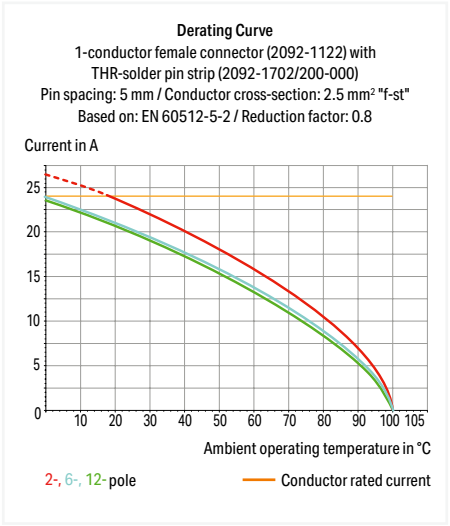

Electrical data			
Ratings per	**IEC/EN 60664-1**		
Overvoltage category	III	III	II
Pollution degree	3	2	2
Nominal voltage	250 V	320 V	630 V
Rated impulse withstand voltage	4 kV	4 kV	4 kV
Rated current	16 A	16 A	16 A

Material data	
Material group	I
Insulation material (main housing)	Polyphthalamide (PPA GF)
Flammability class per UL94	V0
Contact material	Electrolytic copper (E_{Cu})
Contact Plating	Tin

Mechanical data	
Solder pin length	2.4 mm
Solder pin diameter	1.4 mm
Plated through-hole diameter (THR)	1.6 $^{(+0.1)}$ mm

Environmental requirements	
Limit temperature range	-60 … +100 °C

11

Note:
The **picoMAX® Pluggable Connection System** includes connectors without breaking capacity in accordance with DIN EN 61984. When used as intended, these connectors must not be connected/disconnected when live or under load.When used as intended, these connectors must not be connected/ disconnected when live or under load. The circuit design should ensure header pins, which can be touched, are not live when unmated.

THR soldering Page 900

See technical section for further information

Approvals and corresponding ratings, visit www.wago.com

THR pin strip ▸ *picoMAX*® 5.0 ▸ 2092 Series

Pin spacing: 5 mm / 0.197 inches ▸ Color: black

Mating direction to the PCB: 0 °



2092-1726/200-000

Pole number	Item No.	PU (SPU)
2	2092-1722/200-000	300
3	2092-1723/200-000	300
4	2092-1724/200-000	300
5	2092-1725/200-000	300
6	2092-1726/200-000	300
7	2092-1727/200-000	300
8	2092-1728/200-000	300
9	2092-1729/200-000	300
10	2092-1730/200-000	200 (1)
12	2092-1732/200-000	200

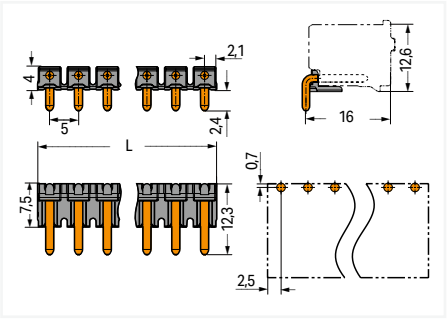

L = (pole no. – 1) x pin spacing + 4.2 mm

Mating direction to the PCB: 90 °



2092-1706

Pole number	Item No.	PU
2	2092-1702/200-000	400
3	2092-1703/200-000	400
4	2092-1704/200-000	400
5	2092-1705/200-000	400
6	2092-1706/200-000	400
7	2092-1707/200-000	400
8	2092-1708/200-000	400
9	2092-1709/200-000	300
10	2092-1710/200-000	300
12	2092-1712/200-000	300

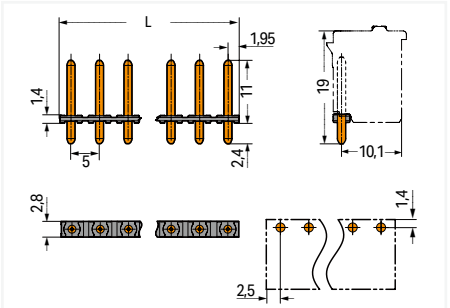

L = (pole no. – 1) x pin spacing + 3.9 mm

11

PU = packaging unit; SPU = subpackaging unit; Dimensions in mm

Variants:

- Tape-and-reel packaging
- Other versions (or variants) can be requested from WAGO Sales or configured at https://configurator.wago.com/.

Panel feedthrough male connector ▸ *picoMAX*® 5.0 ▸ 2092 Series

Pin spacing: 5 mm / 0.197 inches ▸ Mounting type: Feed-through mounting; Panel mounting ▸ Mounting type: Mounting flange ▸ Locking of plug-in connection: Locking latch ▸ Color: light gray



- Male connectors for screw mounting in device or enclosure panels
- External plug-in connection via locking latches to female connectors with conductor terminations
- Internal plug-in connection to female headers with solder pins or female connectors with conductor terminations
- Also available with pre-assembled female connectors on both sides
- Fixing flanges also suitable for panel mounting

Derating Curve
2 x 1-conductor female connector (2092-1126) with panel feedthrough male connector (2092-1636/024-000)
Pin spacing: 5 mm / Conductor cross-section: 2.5 mm² "f-st"
Based on: EN 60512-5-2 / Reduction factor: 0.8

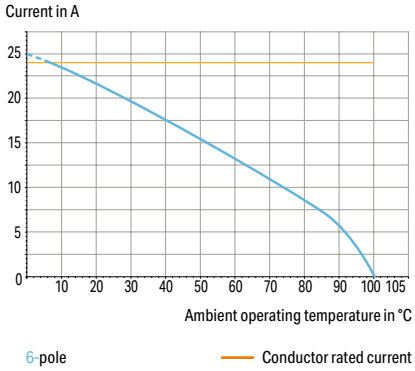

Electrical data			
Ratings per	**IEC/EN 60664-1**		
Overvoltage category	III	III	II
Pollution degree	3	2	2
Nominal voltage	250 V	320 V	630 V
Rated impulse withstand voltage	4 kV	4 kV	4 kV
Rated current	16 A	16 A	16 A
Approvals per	**UL 1059**		
Use group	B	C	D
Rated voltage	300 V	-	300 V
Rated current	15 A	-	10 A

Material data	
Material group	I
Insulation material (main housing)	Polyphthalamide (PPA GF)
Flammability class per UL94	V0
Contact material	Electrolytic copper (E_{Cu})
Contact Plating	Tin

Environmental requirements	
Limit temperature range	-60 … +100 °C
Processing temperature	-35 … +60 °C

Note:
The **picoMAX® Pluggable Connection System** includes connectors without breaking capacity in accordance with DIN EN 61984. When used as intended, these connectors must not be connected/disconnected when live or under load.When used as intended, these connectors must not be connected/disconnected when live or under load. The circuit design should ensure header pins, which can be touched, are not live when unmated.

See technical section for further information

Approvals and corresponding ratings, visit www.wago.com

Panel feedthrough male connector ▸ *picoMAX*® 5.0 ▸ 2092 Series

Pin spacing: 5 mm / 0.197 inches ▸ Mounting type: Feed-through mounting; Panel mounting ▸ Mounting type: Mounting flange ▸ Locking of plug-in connection: Locking latch ▸ Color: light gray



2092-1636/024-000

Pole number	Item No.	PU
2	**2092-1632/024-000**	100
3	**2092-1633/024-000**	100
4	**2092-1634/024-000**	50
5	**2092-1635/024-000**	50
6	**2092-1636/024-000**	50

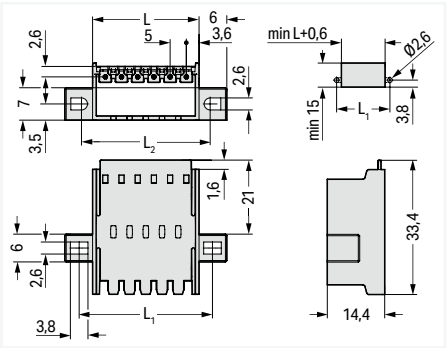

L = (pole no. x pin spacing) + 2.2 mm
L_1 = (pole no. x pin spacing) + 8 mm
L_2 = (pole no. x pin spacing) + 7 mm

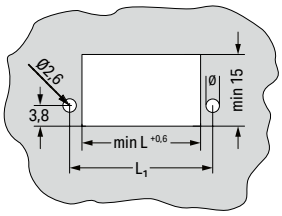

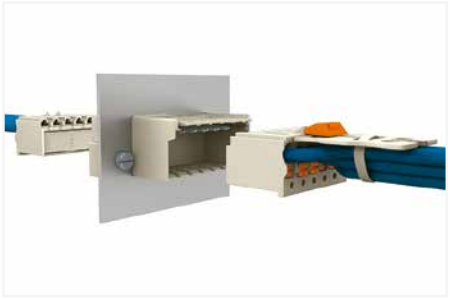

"Wire-to-wire" panel feedthrough connection
Notice: Male connectors must not be live when disconnected!



"Wire-to-board" panel feedthrough connection

11

PU = packaging unit; SPU = subpackaging unit; Dimensions in mm

1-conductor female connector ▸ *picoMAX*® 7.5 ▸ 2092 Series

Pin spacing: 7.5 mm / 0.295 inches ▸ Actuation type: Push-button ▸ Push-in CAGE CLAMP® ▸ Color: light gray

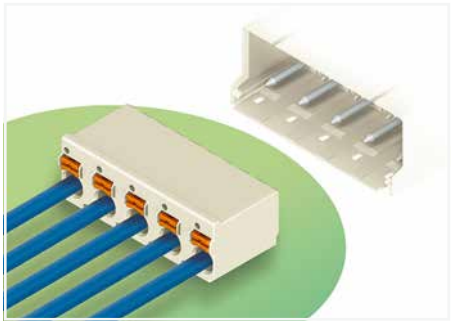

- Universal connection of all conductor types
- Simple, push-in termination of solid and ferruled conductors
- Easy-to-use design does not require special tools
- Ability to wire while mated or unmated
- Testing parallel to conductor entry – tip contact
- Also available with gripping plates
- Integrated locking latches prevent accidental disconnection

Derating Curve
1-conductor female connector (2092-3124) with THT male header (2092-3404)
Pin spacing: 7.5 mm / Conductor cross-section: 2.5 mm² "f-st"
Based on: EN 60512-5-2 / Reduction factor: 0.8

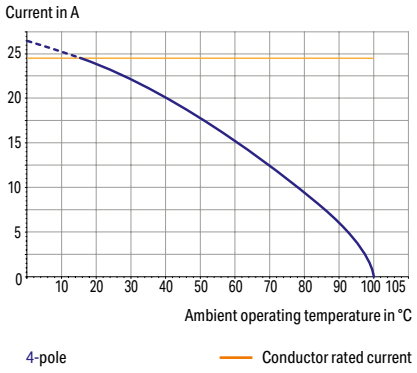

Electrical data			
Ratings per	**IEC/EN 60664-1**		
Overvoltage category	III	III	II
Pollution degree	3	2	2
Nominal voltage	400 V	630 V	1000 V
Rated impulse withstand voltage	6 kV	6 kV	6 kV
Rated current	16 A	16 A	16 A
Approvals per	**UL 1059**		
Use group	B	C	D
Rated voltage	300 V	-	300 V
Rated current	15 A	-	10 A

Connection Data	
Connection technology	Push-in CAGE CLAMP®
Strip length	9 … 10 mm / 0.35 … 0.39 inches
Solid conductor	0.2 … 2.5 mm² / 24 … 12 AWG
Fine-stranded conductor	0.2 … 2.5 mm² / 24 … 12 AWG
Fine-stranded conductor; with insulated ferrule	0.25 … 1.5 mm²
Fine-stranded conductor; with uninsulated ferrule	0.25 … 2.5 mm²

Material data	
Material group	I
Insulation material (main housing)	Polyphthalamide (PPA GF)
Flammability class per UL94	V0
Clamping spring material	Chrome-nickel spring steel (CrNi)
Contact material	Electrolytic copper (E_{Cu})
Contact Plating	Tin

Environmental requirements	
Limit temperature range	-60 … +100 °C
Processing temperature	-35 … +60 °C

Note:
The **picoMAX® Pluggable Connection System** includes connectors without breaking capacity in accordance with DIN EN 61984. When used as intended, these connectors must not be connected/disconnected when live or under load.When used as intended, these connectors must not be connected/ disconnected when live or under load. The circuit design should ensure header pins, which can be touched, are not live when unmated.
The use of ferrules is recommended for applications with higher requirements.

To prevent excessive force on the clamping point, effective cable strain relief must be used.

Ferrule	Page 1081
Strain relief	Page 962
Test and measurement	Page 1088
Tool	Page 960, 1072
Direct marking	Page 958
See technical section for further information	
Approvals and corresponding ratings, visit www.wago.com	

1-conductor female connector ▸ *picoMAX*® 7.5 ▸ 2092 Series

Pin spacing: 7.5 mm / 0.295 inches ▸ Actuation type: Push-button ▸ Push-in CAGE CLAMP® ▸ Color: light gray



2092-3125

Pole number	Item No.	PU
2	2092-3122	100
3	2092-3123	100
4	2092-3124	100
5	2092-3125	100

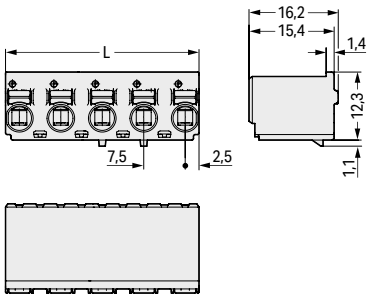

L = (pole no. – 1) x pin spacing + 5 mm



Disconnecting a female connector via unlocking tool. Plug unlocking tool into the male header's locking latch.

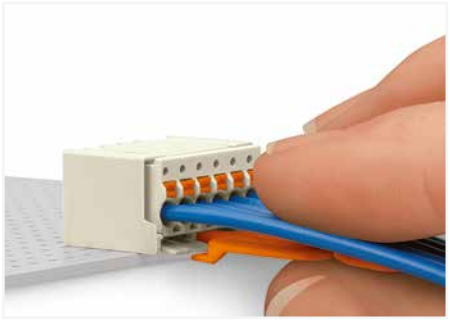

Insert unlocking tool until it hits the backstop. Wedge opens locking latches.



Pull on both unlocking tool and conductors to remove female connector from male header.

11

PU = packaging unit; SPU = subpackaging unit; Dimensions in mm

Variants:

- Direct marking
- Other versions (or variants) can be requested from WAGO Sales or configured at https://configurator.wago.com/.

1-conductor female connector ▸ *picoMAX*® 7.5 ▸ 2092 Series

Pin spacing: 7.5 mm / 0.295 inches ▸ Actuation type: Push-button ▸ Push-in CAGE CLAMP® ▸ Color: light gray

with gripping plate and sliding connector release



2092-3105/002-000

Pole number	Item No.	PU
2	**2092-3102/002-000**	100
3	**2092-3103/002-000**	100
4	**2092-3104/002-000**	100
5	**2092-3105/002-000**	100

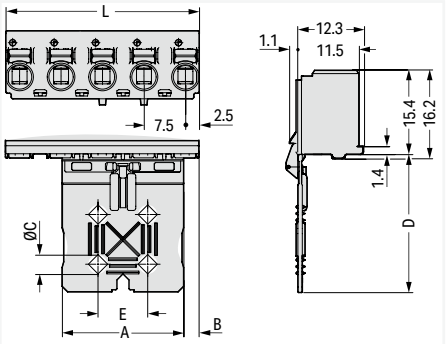

Pole No.	A	B	C	D	E
2	7	2.75	–	20	–
3	12	4	–	20	–
4	22	2.75	3.5	25	9
5	22	2.75	3.5	25	9

L = (pole no. – 1) x pin spacing + 5 mm

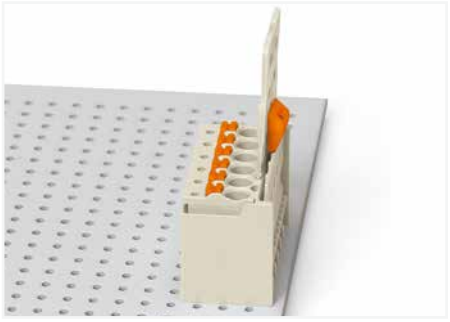

Male header mated to a female connector with gripping plate and sliding connector release.

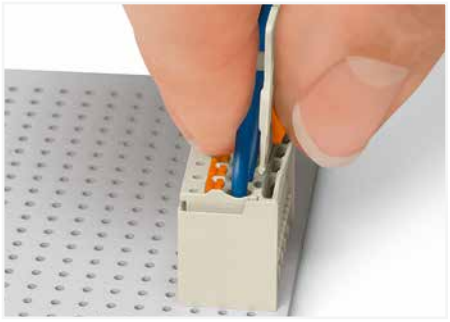

Push down sliding connector release (gripping plate) to open the locking latch.

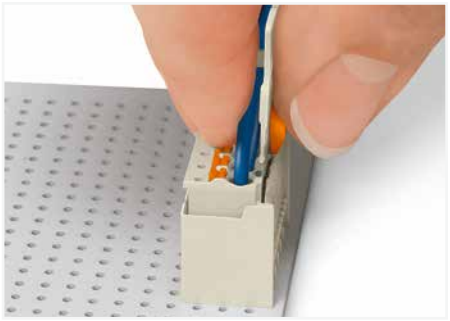

Pull out female connector from male header.

PU = packaging unit; SPU = subpackaging unit; Dimensions in mm

Variants:
- Direct marking
- Other versions (or variants) can be requested from WAGO Sales or configured at https://configurator.wago.com/.

1-conductor female connector ▸ *picoMAX*® 7.5 ▸ 2092 Series

Pin spacing: 7.5 mm / 0.295 inches ▸ Actuation type: Push-button ▸ Push-in CAGE CLAMP® ▸ Color: light gray

with gripping plate



2092-3105

Pole number	Item No.	PU
2	**2092-3102**	100
3	**2092-3103**	100
4	**2092-3104**	100
5	**2092-3105**	100

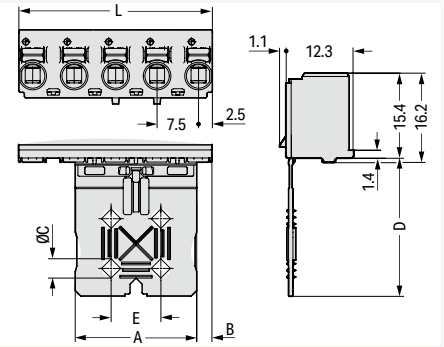

Pole No.	A	B	C	D	E
2	7	2.75	–	20	–
3	12	4	–	20	–
4	22	2.75	3.5	25	9
5	22	2.75	3.5	25	9

L = (pole no. – 1) x pin spacing + 5 mm

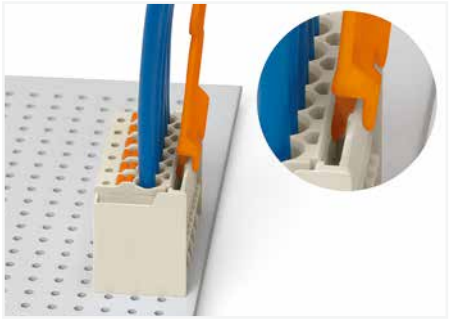

Disconnecting a female connector via unlocking tool. Plug unlocking tool into the male header's locking latch.

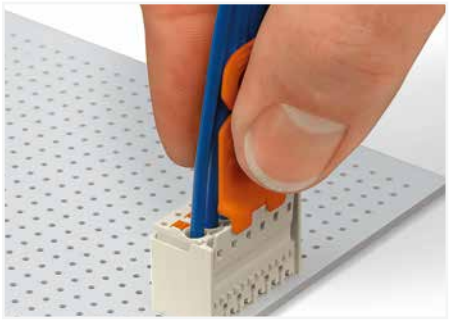

Insert unlocking tool until it hits the backstop. Wedge opens locking latches.

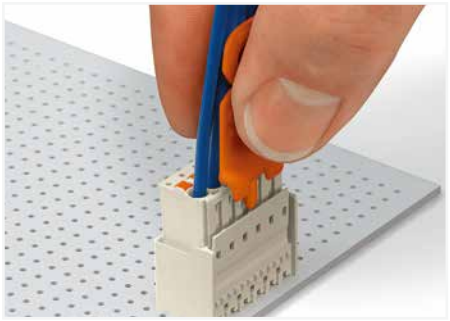

Pull on both unlocking tool and conductors to remove female connector from male header.

11

PU = packaging unit; SPU = subpackaging unit; Dimensions in mm

Variants:

- Direct marking
- Other versions (or variants) can be requested from WAGO Sales or configured at https://configurator.wago.com/.

1-conductor male connector ▸ *picoMAX*® 7.5 ▸ 2092 Series

Pin spacing: 7.5 mm / 0.295 inches ▸ Actuation type: Push-button ▸ Push-in CAGE CLAMP® ▸ Locking of plug-in connection: Locking latch ▸ Color: light gray

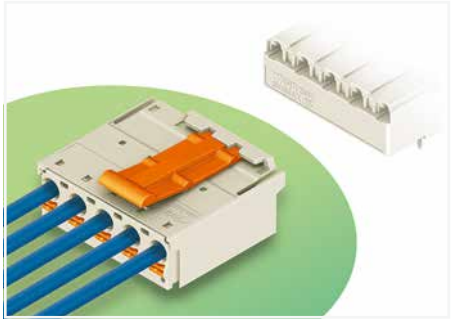

- Universal connection for all conductor types
- Simple, push-in termination of solid and ferruled conductors
- Easy-to-use design does not require special tools
- Testing parallel to conductor entry – tip contact
- For “wire-to-wire” and “board-to-wire” connections
- Integrated release lever

Derating Curve
1-conductor female connector (2092-3124) with
1-conductor male connector (2092-3524/002-000)
Pin spacing: 7.5 mm / Conductor cross-section: 2.5 mm² "f-st"
Based on: EN 60512-5-2 / Reduction factor: 0.8

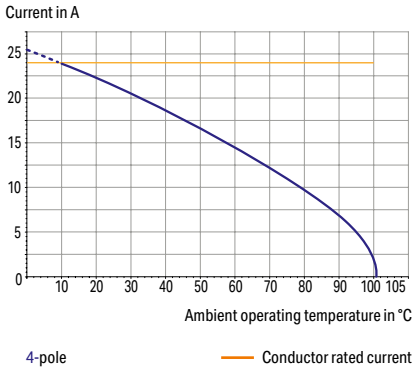

Electrical data			
Ratings per	**IEC/EN 60664-1**		
Overvoltage category	III	III	II
Pollution degree	3	2	2
Nominal voltage	400 V	630 V	1000 V
Rated impulse withstand voltage	6 kV	6 kV	6 kV
Rated current	16 A	16 A	16 A
Approvals per	**UL 1059**		
Use group	B	C	D
Rated voltage	300 V	-	300 V
Rated current	15 A	-	10 A

Connection Data	
Connection technology	Push-in CAGE CLAMP®
Strip length	9 … 10 mm / 0.35 … 0.39 inches
Solid conductor	0.2 … 2.5 mm² / 24 … 12 AWG
Fine-stranded conductor	0.2 … 2.5 mm² / 24 … 12 AWG
Fine-stranded conductor; with insulated ferrule	0.25 … 1.5 mm²
Fine-stranded conductor; with uninsulated ferrule	0.25 … 2.5 mm²

Material data	
Material group	I
Insulation material (main housing)	Polyphthalamide (PPA GF)
Flammability class per UL94	V0
Clamping spring material	Chrome-nickel spring steel (CrNi)
Contact material	Electrolytic copper (E_{Cu})
Contact Plating	Tin

Environmental requirements	
Limit temperature range	-60 … +100 °C
Processing temperature	-35 … +60 °C

Note:
The **picoMAX® Pluggable Connection System** includes connectors without breaking capacity in accordance with DIN EN 61984. When used as intended, these connectors must not be connected/disconnected when live or under load.When used as intended, these connectors must not be connected/ disconnected when live or under load. The circuit design should ensure header pins, which can be touched, are not live when unmated.
The use of ferrules is recommended for applications with higher requirements.

To prevent excessive force on the clamping point, effective cable strain relief must be used.

Ferrule	Page 1081
Test and measurement	Page 1088
Tool	Page 1072
Direct marking	Page 958
See technical section for further information	
Approvals and corresponding ratings, visit www.wago.com	

1-conductor male connector ▸ *picoMAX*® 7.5 ▸ 2092 Series

Pin spacing: 7.5 mm / 0.295 inches ▸ Actuation type: Push-button ▸ Push-in CAGE CLAMP® ▸ Locking of plug-in connection: Locking latch ▸ Color: light gray

	with gripping plate	Mounting type: Snap-in foot







2092-3525/002-000

Pole number	Item No.	PU
2	**2092-3522/002-000**	100
3	**2092-3523/002-000**	100
4	**2092-3524/002-000**	50
5	**2092-3525/002-000**	50

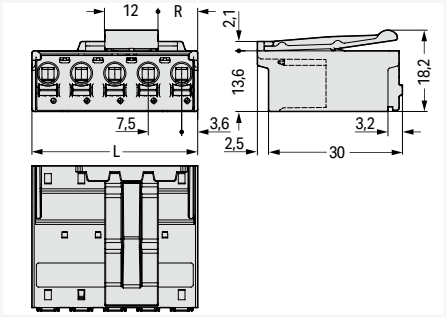

L = (pole no. – 1) x pin spacing + 7.2 mm
Even pole number R = (L – 12 mm) : 2
Odd pole number R = (L – 19.5 mm) : 2

2092-3505/002-000

Pole number	Item No.	PU
2	**2092-3502/002-000**	100
3	**2092-3503/002-000**	100
4	**2092-3504/002-000**	50
5	**2092-3505/002-000**	50

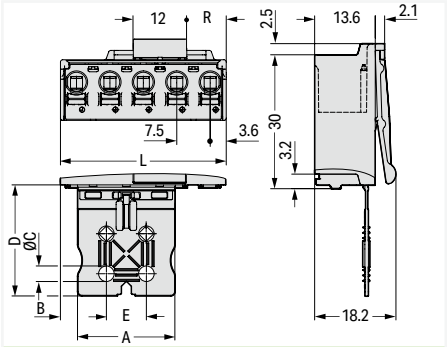

Pole No.	A	B	C	D	E
2	7	3.85	–	20	–
3	12	5.1	–	20	–
4	22	3.85	3.5	25	9
5	22	3.85	3.5	25	9

L = (pole no. – 1) x pin spacing + 7.2 mm
Even pole number R = (L – 12 mm) : 2
Odd pole number R = (L – 19.5 mm) : 2

2092-3525/020-000

Pole number	Item No.	PU
2	**2092-3522/020-000**	100
3	**2092-3523/020-000**	100
4	**2092-3524/020-000**	50
5	**2092-3525/020-000**	50

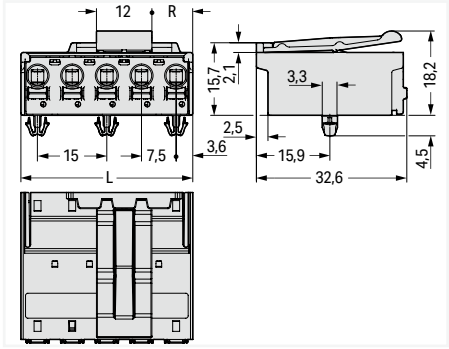

L = (pole no. – 1) x pin spacing + 7.2 mm
Even pole number R = (L – 12 mm) : 2
Odd pole number R = (L – 19.5 mm) : 2

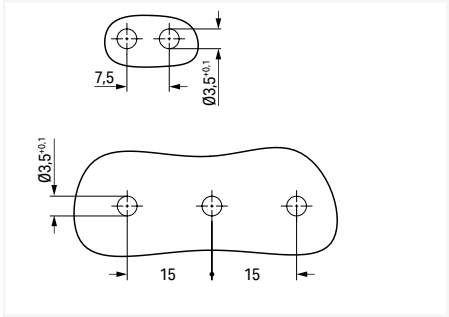

PU = packaging unit; SPU = subpackaging unit; Dimensions in mm

Variants:
- Direct marking
- Other versions (or variants) can be requested from WAGO Sales or configured at https://configurator.wago.com/.

THT female header ▸ *picoMAX*® 7.5 ▸ 2092 Series

Pin spacing: 7.5 mm / 0.295 inches ▸ Color: light gray

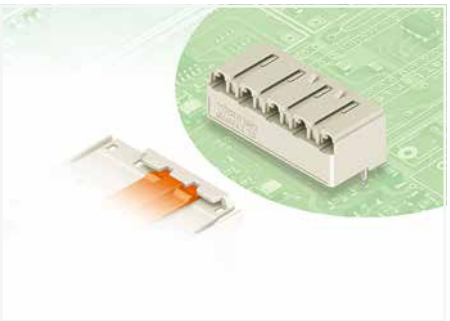

- Touch-proof PCB outputs
- Easy-to-identify PCB inputs and outputs
- Coding option available

Derating Curve
THT female header (2092-3324) with
1-conductor male connector (2092-3524/002-000)
Pin spacing: 7.5 mm / Conductor cross-section: 2.5 mm² "f-st"
Based on: EN 60512-5-2 / Reduction factor: 0.8

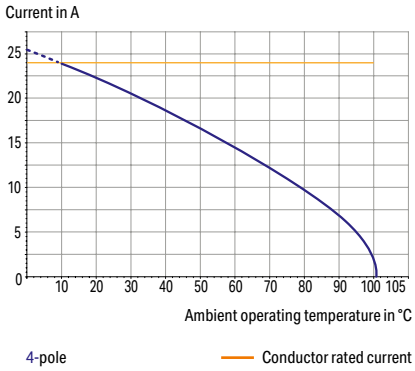

Electrical data			
Ratings per	**IEC/EN 60664-1**		
Overvoltage category	III	III	II
Pollution degree	3	2	2
Nominal voltage	400 V	630 V	1000 V
Rated impulse withstand voltage	6 kV	6 kV	6 kV
Rated current	16 A	16 A	16 A
Approvals per	**UL 1059**		
Use group	B	C	D
Rated voltage	300 V	-	300 V
Rated current	15 A	-	10 A

Material data	
Material group	I
Insulation material (main housing)	Polyphthalamide (PPA GF)
Flammability class per UL94	V0
Contact material	Copper alloy
Contact Plating	Tin

Mechanical data	
Solder pin length	3.6 mm
Solder pin dimensions	0.4 x 1.3 mm
Drilled hole diameter	1.5 $^{(+0.1)}$ mm

Environmental requirements	
Limit temperature range	-60 … +100 °C
Processing temperature	-35 … +60 °C

11

Note:
The **picoMAX® Pluggable Connection System** includes connectors without breaking capacity in accordance with DIN EN 61984. When used as intended, these connectors must not be connected/disconnected when live or under load.When used as intended, these connectors must not be connected/ disconnected when live or under load. The circuit design should ensure header pins, which can be touched, are not live when unmated.

Coding Page 961

See technical section for further information

Approvals and corresponding ratings, visit www.wago.com

THT female header ▸ *picoMAX*® 7.5 ▸ 2092 Series

Pin spacing: 7.5 mm / 0.295 inches ▸ Color: light gray

Mating direction to the PCB: 0 °



2092-3325

Pole number	Item No.	PU
2	**2092-3322**	100
3	**2092-3323**	100
4	**2092-3324**	100
5	**2092-3325**	100

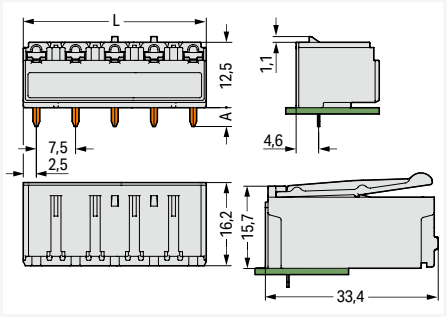

L = (pole no. – 1) x pin spacing + 5 mm
A = 3.6 mm THT solder pin
A = 2.4 mm THR solder pin

Mating direction to the PCB: 90 °



2092-3305

Pole number	Item No.	PU
2	**2092-3302**	100
3	**2092-3303**	100
4	**2092-3304**	100

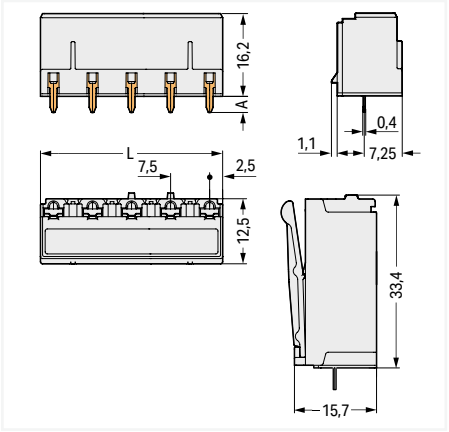

L = (pole no. – 1) x pin spacing + 5 mm
A = 3.6 mm THT solder pin
A = 2.4 mm THR solder pin

11

PU = packaging unit; SPU = subpackaging unit; Dimensions in mm

THT male header ▸ *picoMAX*® 7.5 ▸ 2092 Series

Pin spacing: 7.5 mm / 0.295 inches ▸ Locking of plug-in connection: Locking latch ▸ Color: light gray

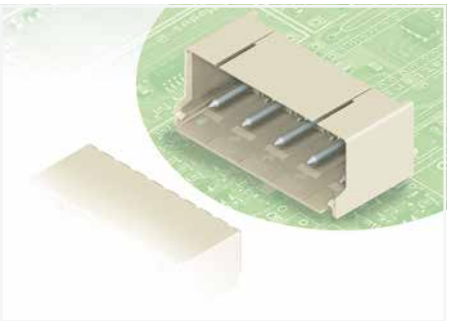

- Modular assembly of multiple female connectors without pole loss within one male header, enabling separation of functions (≥ 4 poles)
- Coding pins integrated in the header interface prevent mismating and allow retroactive coding in panel feedthrough applications
- Female connector deeply embedded in the header housing for 8 g vibration resistance with ferrules

Derating Curve
1-conductor female connector (2092-3124) with
THT male header (2092-3404)
Pin spacing: 7.5 mm / Conductor cross-section: 2.5 mm² "f-st"
Based on: EN 60512-5-2 / Reduction factor: 0.8

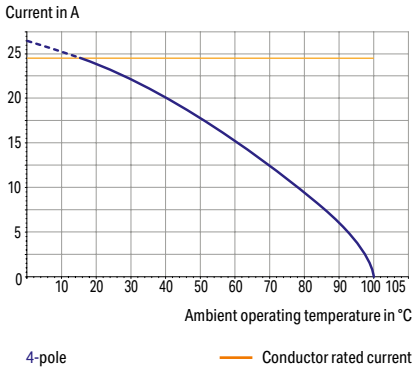

Electrical data			
Ratings per	**IEC/EN 60664-1**		
Overvoltage category	III	III	II
Pollution degree	3	2	2
Nominal voltage	400 V	630 V	1000 V
Rated impulse withstand voltage	6 kV	6 kV	6 kV
Rated current	16 A	16 A	16 A
Approvals per	**UL 1059**		
Use group	B	C	D
Rated voltage	300 V	-	300 V
Rated current	15 A	-	10 A

Material data	
Material group	I
Insulation material (main housing)	Polyphthalamide (PPA GF)
Flammability class per UL94	V0
Contact material	Electrolytic copper (E_{Cu})
Contact Plating	Tin

Mechanical data	
Solder pin length	3.6 mm
Solder pin diameter	1.4 mm
Drilled hole diameter	1.6 $^{(+0.1)}$ mm

Environmental requirements	
Limit temperature range	-60 … +100 °C
Processing temperature	-35 … +60 °C

Note:
The **picoMAX® Pluggable Connection System** includes connectors without breaking capacity in accordance with DIN EN 61984. When used as intended, these connectors must not be connected/disconnected when live or under load.When used as intended, these connectors must not be connected/disconnected when live or under load. The circuit design should ensure header pins, which can be touched, are not live when unmated.

Coding Page 961
See technical section for further information
Approvals and corresponding ratings, visit www.wago.com

THT male header ▸ *picoMAX*® 7.5 ▸ 2092 Series

Pin spacing: 7.5 mm / 0.295 inches ▸ Locking of plug-in connection: Locking latch ▸ Color: light gray

Mating direction to the PCB: 0 °



2092-3425

Pole number	Item No.	PU
2	2092-3422	100
3	2092-3423	100
4	2092-3424	100
5	2092-3425	100

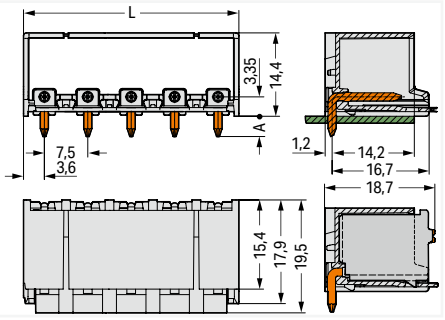

L = (pole no. – 1) x pin spacing + 7.2 mm
A = 3.6 mm THT solder pin
A = 2.4 mm THR solder pin

Mating direction to the PCB: 90 °



2092-3405

Pole number	Item No.	PU
2	2092-3402	100
3	2092-3403	100
4	2092-3404	100
5	2092-3405	100

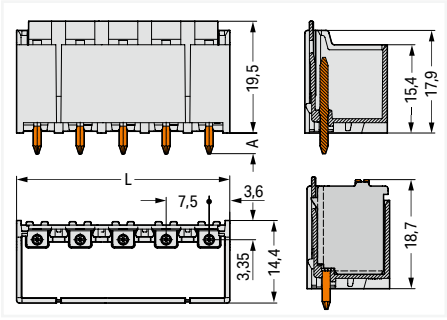

L = (pole no. – 1) x pin spacing + 7.2 mm
A = 3.6 mm THT solder pin
A = 2.4 mm THR solder pin

11

PU = packaging unit; SPU = subpackaging unit; Dimensions in mm

Variants:
- Direct marking
- Other versions (or variants) can be requested from WAGO Sales or configured at https://configurator.wago.com/.

THT male header ▸ *picoMAX*® 7.5 ▸ 2092 Series

Pin spacing: 7.5 mm / 0.295 inches ▸ Locking of plug-in connection: Locking latch ▸ Color: light gray

Mounting type: Feed-through mounting; Panel mounting ▸ Mounting type: Mounting flange

Mating direction to the PCB: 0 °



2092-3425/005-000

Pole number	Item No.	PU
2	**2092-3422/005-000**	100
3	**2092-3423/005-000**	100
4	**2092-3424/005-000**	100
5	**2092-3425/005-000**	100

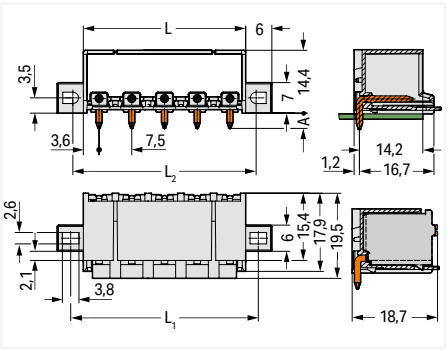

L = (pole no. – 1) x pin spacing + 7.2 mm
L_1 = (pole no. x pin spacing) + 5.5 mm
L_2 = (pole no. x pin spacing) + 4.5 mm
A = 3.6 mm THT solder pin
A = 2.4 mm THR solder pin

Mating direction to the PCB: 90 °



2092-3405/005-000

Pole number	Item No.	PU
2	**2092-3402/005-000**	100
3	**2092-3403/005-000**	100
4	**2092-3404/005-000**	100
5	**2092-3405/005-000**	100

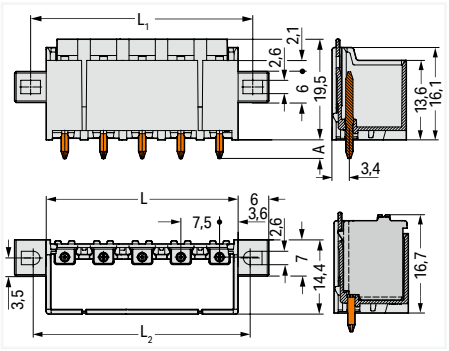

L = (pole no. – 1) x pin spacing + 7.2 mm
L_1 = (pole no. x pin spacing) + 5.5 mm
L_2 = (pole no. x pin spacing) + 4.5 mm
A = 3.6 mm THT solder pin
A = 2.4 mm THR solder pin

11

PU = packaging unit; SPU = subpackaging unit; Dimensions in mm

Variants:
- Direct marking
- Other versions (or variants) can be requested from WAGO Sales or configured at https://configurator.wago.com/.

THT pin strip ▸ *picoMAX*® 7.5 ▸ 2092 Series

Pin spacing: 7.5 mm / 0.295 inches ▸ Color: black

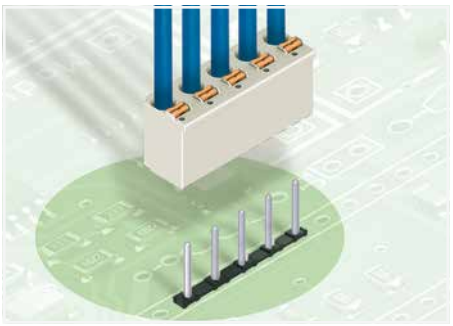

- Solder pin strips may be mounted horizontally or vertically via straight or angled solder pins
- Assembly of female connectors without loss of poles, allowing different functions to be divided within one solder pin strip

Derating Curve
1-conductor female connector (2092-3124) with THT-solder pin strip (2092-3704)
Pin spacing: 7.5 mm / Conductor cross-section: 2.5 mm² "f-st"
Based on: EN 60512-5-2 / Reduction factor: 0.8

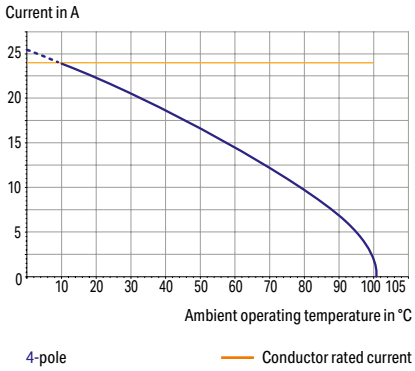

Electrical data			
Ratings per	**IEC/EN 60664-1**		
Overvoltage category	III	III	II
Pollution degree	3	2	2
Nominal voltage	400 V	630 V	1000 V
Rated impulse withstand voltage	6 kV	6 kV	6 kV
Rated current	16 A	16 A	16 A

Material data	
Material group	I
Insulation material (main housing)	Polyphthalamide (PPA GF)
Flammability class per UL94	V0
Contact material	Electrolytic copper (E_{Cu})
Contact Plating	Tin

Mechanical data	
Solder pin length	3.6 mm
Solder pin diameter	1.4 mm
Drilled hole diameter	1.6 $^{(+0.1)}$ mm

Environmental requirements	
Limit temperature range	-60 … +100 °C

Note:
The **picoMAX® Pluggable Connection System** includes connectors without breaking capacity in accordance with DIN EN 61984. When used as intended, these connectors must not be connected/disconnected when live or under load.When used as intended, these connectors must not be connected/disconnected when live or under load. The circuit design should ensure header pins, which can be touched, are not live when unmated.

See technical section for further information

Approvals and corresponding ratings, visit www.wago.com

THT pin strip ▸ *picoMAX*® 7.5 ▸ 2092 Series

Pin spacing: 7.5 mm / 0.295 inches ▸ Color: black

Mating direction to the PCB: 0 °



2092-3725

Pole number	Item No.	PU
2	**2092-3722**	300
3	**2092-3723**	300
4	**2092-3724**	300
5	**2092-3725**	300

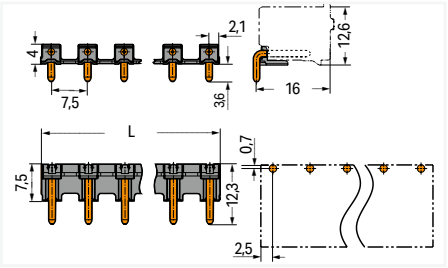

L = (pole no. – 1) x pin spacing + 4.2 mm

Mating direction to the PCB: 90 °



2092-3705

Pole number	Item No.	PU
2	**2092-3702**	400
3	**2092-3703**	400
4	**2092-3704**	400
5	**2092-3705**	400

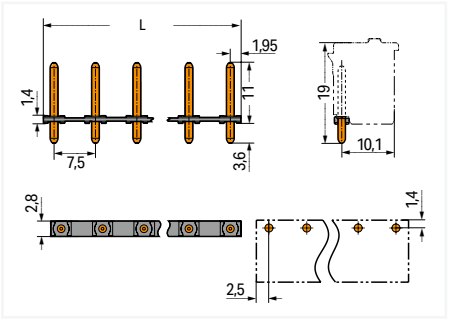

L = (pole no. – 1) x pin spacing + 3.9 mm

PU = packaging unit; SPU = subpackaging unit; Dimensions in mm

THR female header ▸ *picoMAX*® 7.5 ▸ 2092 Series

Pin spacing: 7.5 mm / 0.295 inches ▸ Color: light gray

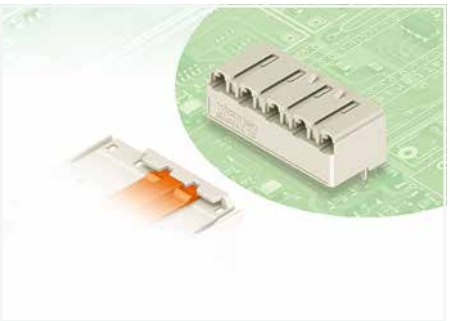

- Modular assembly of multiple female connectors without pole loss within one male header, enabling separation of functions (≥ 4 poles)
- Coding pins integrated in the header interface prevent mismating and allow retroactive coding in panel feedthrough applications

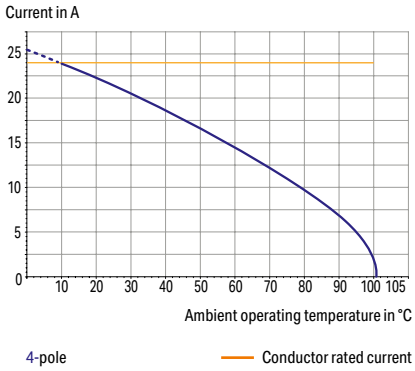

Electrical data			
Ratings per	**IEC/EN 60664-1**		
Overvoltage category	III	III	II
Pollution degree	3	2	2
Nominal voltage	400 V	630 V	1000 V
Rated impulse withstand voltage	6 kV	6 kV	6 kV
Rated current	16 A	16 A	16 A
Approvals per	**UL 1059**		
Use group	B	C	D
Rated voltage	300 V	-	300 V
Rated current	15 A	-	10 A

Material data	
Material group	I
Insulation material (main housing)	Polyphthalamide (PPA GF)
Flammability class per UL94	V0
Contact material	Copper alloy
Contact Plating	Tin

Mechanical data	
Solder pin length	2.4 mm
Solder pin dimensions	0.4 x 1.3 mm
Plated through-hole diameter (THR)	1.5 $^{(+0.1)}$ mm

Environmental requirements	
Limit temperature range	-60 … +100 °C
Processing temperature	-35 … +60 °C

11

Note:
The **picoMAX® Pluggable Connection System** includes connectors without breaking capacity in accordance with DIN EN 61984. When used as intended, these connectors must not be connected/disconnected when live or under load.When used as intended, these connectors must not be connected/disconnected when live or under load. The circuit design should ensure header pins, which can be touched, are not live when unmated.

THR soldering	Page 900
Coding	Page 961
See technical section for further information	
Approvals and corresponding ratings, visit www.wago.com	

THR female header ▸ *picoMAX*® 7.5 ▸ 2092 Series

Pin spacing: 7.5 mm / 0.295 inches ▸ Color: light gray

Mating direction to the PCB: 0 °



2092-3325/200-000

Pole number	Item No.	PU
2	**2092-3322/200-000**	100
3	**2092-3323/200-000**	100
4	**2092-3324/200-000**	100
5	**2092-3325/200-000**	100

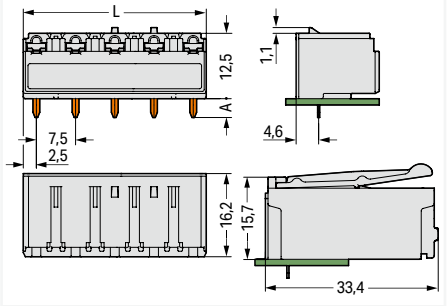

L = (pole no. – 1) x pin spacing + 5 mm
A = 3.6 mm THT solder pin
A = 2.4 mm THR solder pin

Mating direction to the PCB: 90 °



2092-3305/200-000

Pole number	Item No.	PU
2	**2092-3302/200-000**	100
3	**2092-3303/200-000**	100
4	**2092-3304/200-000**	100
5	**2092-3305/200-000**	100

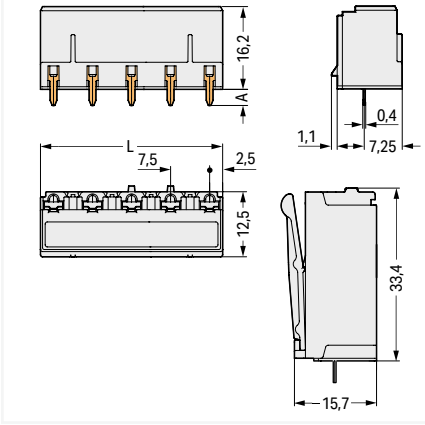

L = (pole no. – 1) x pin spacing + 5 mm
A = 3.6 mm THT solder pin
A = 2.4 mm THR solder pin

PU = packaging unit; SPU = subpackaging unit; Dimensions in mm

THR male header ▸ *picoMAX*® 7.5 ▸ 2092 Series

Pin spacing: 7.5 mm / 0.295 inches ▸ Locking of plug-in connection: Locking latch ▸ Color: light gray

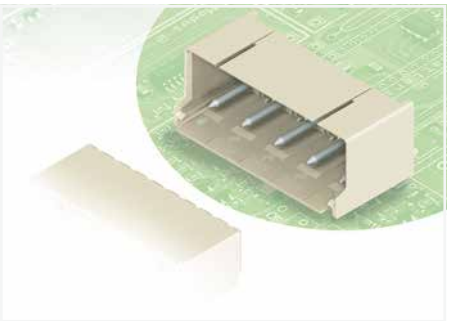

- Assembly of female connectors without loss of poles, allowing different functions to be divided within one male header (≥ 4 poles)
- Coding pins inserted into the header interface prevent mismating, allowing subsequent coding in panel feedthrough applications
- The female connector is fully shrouded by the male header's housing, providing vibration resistance for 8 g with ferrule

Derating Curve
1-conductor female connector (2092-3124) with THT male header (2092-3404)
Pin spacing: 7.5 mm / Conductor cross-section: 2.5 mm² "f-st"
Based on: EN 60512-5-2 / Reduction factor: 0.8

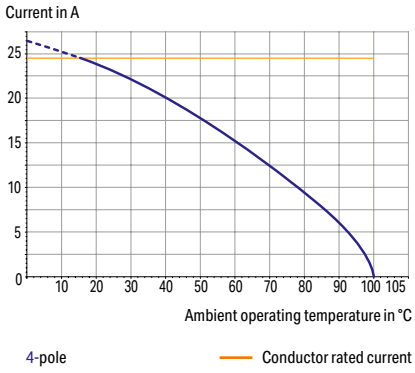

Electrical data			
Ratings per	**IEC/EN 60664-1**		
Overvoltage category	III	III	II
Pollution degree	3	2	2
Nominal voltage	400 V	630 V	1000 V
Rated impulse withstand voltage	6 kV	6 kV	6 kV
Rated current	16 A	16 A	16 A
Approvals per	**UL 1059**		
Use group	B	C	D
Rated voltage	300 V	-	300 V
Rated current	15 A	-	10 A

Material data	
Material group	I
Insulation material (main housing)	Polyphthalamide (PPA GF)
Flammability class per UL94	V0
Contact material	Electrolytic copper (E_{Cu})
Contact Plating	Tin

Mechanical data	
Solder pin length	2.4 mm
Solder pin diameter	1.4 mm
Plated through-hole diameter (THR)	1.6 $^{(+0.1)}$ mm

Environmental requirements	
Limit temperature range	-60 … +100 °C
Processing temperature	-35 … +60 °C

Note:
The **picoMAX® Pluggable Connection System** includes connectors without breaking capacity in accordance with DIN EN 61984. When used as intended, these connectors must not be connected/disconnected when live or under load.When used as intended, these connectors must not be connected/disconnected when live or under load. The circuit design should ensure header pins, which can be touched, are not live when unmated.

THR soldering	Page 900
Coding	Page 961
See technical section for further information	
Approvals and corresponding ratings, visit www.wago.com	

THR male header ▸ *picoMAX*® 7.5 ▸ 2092 Series

Pin spacing: 7.5 mm / 0.295 inches ▸ Locking of plug-in connection: Locking latch ▸ Color: light gray

Mating direction to the PCB: 0 °



2092-3425/200-000

Pole number	Item No.	PU
2	2092-3422/200-000	100
3	2092-3423/200-000	100
4	2092-3424/200-000	100
5	2092-3425/200-000	100

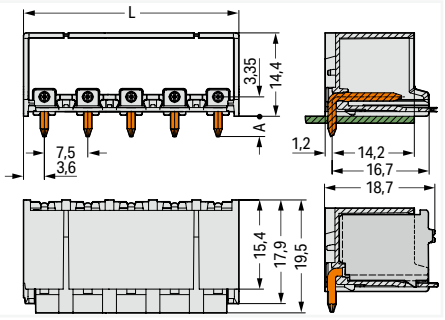

L = (pole no. – 1) x pin spacing + 7.2 mm
A = 3.6 mm THT solder pin
A = 2.4 mm THR solder pin

Mating direction to the PCB: 90 °



2092-3405/200-000

Pole number	Item No.	PU
2	2092-3402/200-000	100
3	2092-3403/200-000	100
4	2092-3404/200-000	100
5	2092-3405/200-000	100

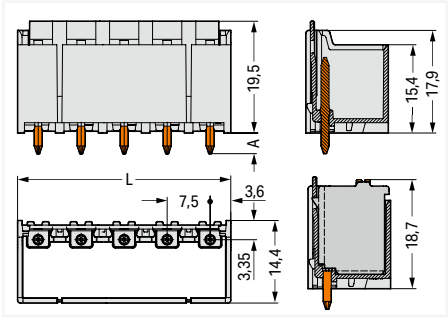

L = (pole no. – 1) x pin spacing + 7.2 mm
A = 3.6 mm THT solder pin
A = 2.4 mm THR solder pin

11

PU = packaging unit; SPU = subpackaging unit; Dimensions in mm

Variants:
- Direct marking
- Tape-and-reel packaging
- Other versions (or variants) can be requested from WAGO Sales or configured at https://configurator.wago.com/.

THR male header ▸ *picoMAX*® 7.5 ▸ 2092 Series

Pin spacing: 7.5 mm / 0.295 inches ▸ Locking of plug-in connection: Locking latch ▸ Color: light gray

Mounting type: Feed-through mounting; Panel mounting ▸ Mounting type: Mounting flange

Mating direction to the PCB: 0 °



2092-3425/205-000

Pole number	Item No.	PU
2	**2092-3422/205-000**	100
3	**2092-3423/205-000**	100
4	**2092-3424/205-000**	100
5	**2092-3425/205-000**	100

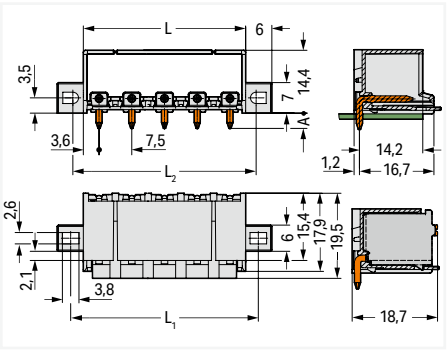

L = (pole no. – 1) x pin spacing + 7.2 mm
L_1 = (pole no. x pin spacing) + 5.5 mm
L_2 = (pole no. x pin spacing) + 4.5 mm
A = 3.6 mm THT solder pin
A = 2.4 mm THR solder pin

Mating direction to the PCB: 90 °



2092-3405/205-000

Pole number	Item No.	PU
2	**2092-3402/205-000**	100
3	**2092-3403/205-000**	100
4	**2092-3404/205-000**	100
5	**2092-3405/205-000**	100

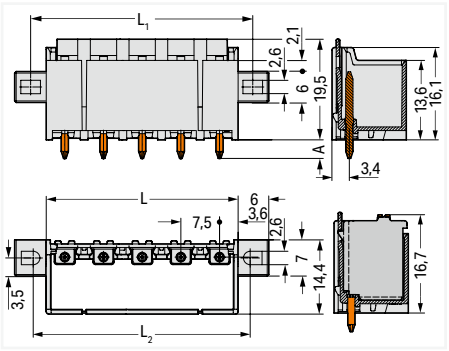

L = (pole no. – 1) x pin spacing + 7.2 mm
L_1 = (pole no. x pin spacing) + 5.5 mm
L_2 = (pole no. x pin spacing) + 4.5 mm
A = 3.6 mm THT solder pin
A = 2.4 mm THR solder pin

11

PU = packaging unit; SPU = subpackaging unit; Dimensions in mm

Variants:
- Direct marking
- Tape-and-reel packaging
- Other versions (or variants) can be requested from WAGO Sales or configured at https://configurator.wago.com/.

THR pin strip ▸ *picoMAX*® 7.5 ▸ 2092 Series

Pin spacing: 7.5 mm / 0.295 inches ▸ Color: black

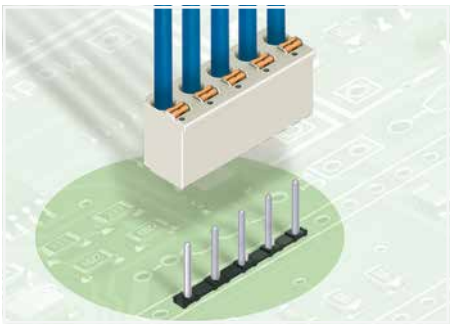

- Solder pin strips may be mounted horizontally or vertically via straight or angled solder pins
- Assembly of female connectors without loss of poles, allowing different functions to be divided within one solder pin strip

Derating Curve
1-conductor female connector (2092-3124) with THR-solder pin strip (2092-3704/200-000)
Pin spacing: 7.5 mm / Conductor cross-section: 2.5 mm² "f-st"
Based on: EN 60512-5-2 / Reduction factor: 0.8

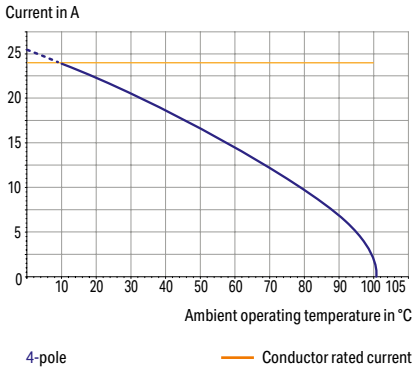

Electrical data			
Ratings per	**IEC/EN 60664-1**		
Overvoltage category	III	III	II
Pollution degree	3	2	2
Nominal voltage	400 V	630 V	1000 V
Rated impulse withstand voltage	6 kV	6 kV	6 kV
Rated current	16 A	16 A	16 A

Material data	
Material group	I
Insulation material (main housing)	Polyphthalamide (PPA GF)
Flammability class per UL94	V0
Contact material	Electrolytic copper (E_{Cu})
Contact Plating	Tin

Mechanical data	
Solder pin length	2.4 mm
Solder pin diameter	1.4 mm
Plated through-hole diameter (THR)	1.6 $^{(+0.1)}$ mm

Environmental requirements	
Limit temperature range	-60 … +100 °C

11

Note:
The **picoMAX® Pluggable Connection System** includes connectors without breaking capacity in accordance with DIN EN 61984. When used as intended, these connectors must not be connected/disconnected when live or under load.When used as intended, these connectors must not be connected/ disconnected when live or under load. The circuit design should ensure header pins, which can be touched, are not live when unmated.

THR soldering Page 900

See technical section for further information

Approvals and corresponding ratings, visit www.wago.com

THR pin strip ▸ *picoMAX*® 7.5 ▸ 2092 Series

Pin spacing: 7.5 mm / 0.295 inches ▸ Color: black

Mating direction to the PCB: 0 °



2092-3725/200-000

Pole number	Item No.	PU
2	2092-3722/200-000	300
3	2092-3723/200-000	300
4	2092-3724/200-000	300
5	2092-3725/200-000	300

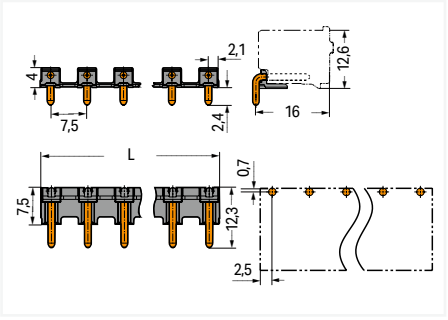

L = (pole no. – 1) x pin spacing + 4.2 mm

Mating direction to the PCB: 90 °



2092-3705/200-000

Pole number	Item No.	PU
2	2092-3702/200-000	400
3	2092-3703/200-000	400
4	2092-3704/200-000	400
5	2092-3705/200-000	400

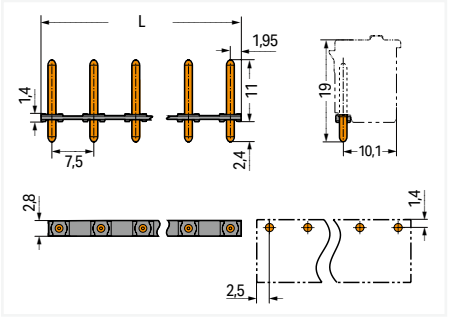

L = (pole no. – 1) x pin spacing + 3.9 mm

PU = packaging unit; SPU = subpackaging unit; Dimensions in mm

Variants:

- Tape-and-reel packaging
- Other versions (or variants) can be requested from WAGO Sales or configured at https://configurator.wago.com/.

Direct Marking

Series 2091 and 2092



Direct marking of 1-conductor female connectors; parallel to conductor entry; 1 ... Pole number; „Wire-to-Board" Item No. Suffix: /. . . - 1000	
Version	**Item No. Example**
1-conductor female connector; 3,5 mm Pin spacing; 6-pole; light gray	**2091-1126/000-1000**
1-conductor female connector with gripping plate; 3,5 mm Pin spacing; 6-pole; light gray	**2091-1106/000-1000**
1-conductor female connector with gripping plate and sliding connector release; 3,5 mm Pin spacing; 6-pole; light gray	**2091-1106/002-1000**



Direct marking of 1-conductor female connectors; parallel to conductor entry; Pole number ... 1; „Wire-to-Wire" Item No. Suffix: /. . . - 3000	
Version	**Item No. Example**
1-conductor female connector; 3,5 mm Pin spacing; 6-pole; light gray	**2091-1126/000-3000**
1-conductor female connector with gripping plate; 3,5 mm Pin spacing; 6-pole; light gray	**2091-1106/000-3000**
1-conductor female connector with gripping plate and sliding connector release; 3,5 mm Pin spacing; 6-pole; light gray	**2091-1106/002-3000**



Direct marking of 1-conductor male connectors; parallel to conductor entry; 1 ... Pole number; „Wire-to-Board" and „Wire-to-Board" Item No. Suffix: /. . . - 3000	
Version	**Item No. Example**
1-conductor male connector; 3,5 mm Pin spacing; 6-pole; light gray	**2091-1526/002-3000**
1-conductor male connector with gripping plate; 3,5 mm Pin spacing; 6-pole; light gray	**2091-1506/002-3000**



Direct marking of 1-conductor female connectors; perpendicular to conductor entry; 1 ... Pole number; „Wire-to-Board" Item No. Suffix: /. . . - 5000	
Version	**Item No. Example**
1-conductor female connector; 3,5 mm Pin spacing; 6-pole; light gray	**2091-1376/000-5000**
1-conductor female connector with gripping plate; 3,5 mm Pin spacing; 6-pole; light gray	**2091-1356/000-5000**

Operating tool



2092-1630

Color	Item No.	PU (SPU)
orange	**2092-1630**	100 (25)

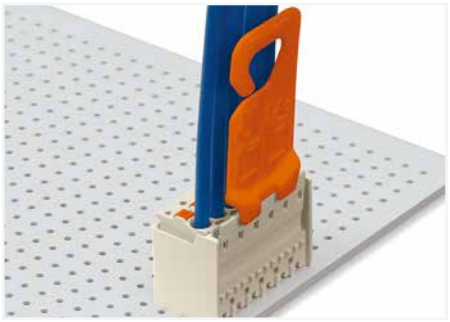

Disconnecting female connector via unlocking tool. Plug unlocking tool into the male header's locking latch.

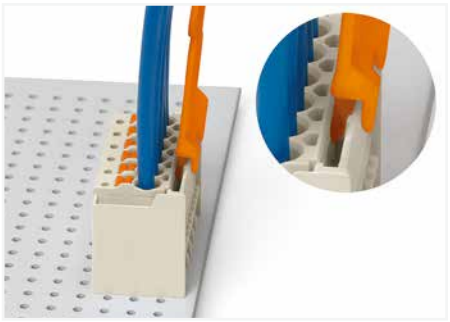

Disconnecting a female connector via unlocking tool. Plug unlocking tool into the male header's locking latch.

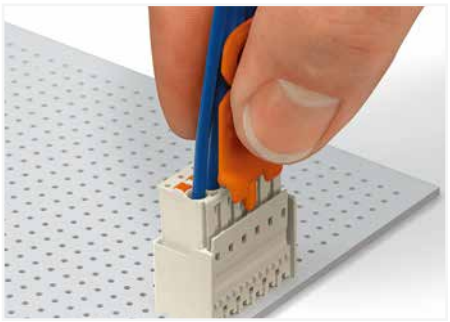

Pull on both unlocking tool and conductors to remove female connector from male header.

11

PU = packaging unit; SPU = subpackaging unit

Coding



2091-1610

Suitable for 2091 Series		
Color	**Item No.**	PU (SPU)
orange	**2091-1610**	100 (25)

Suitable for 2092 Series		
Color	**Item No.**	PU (SPU)
orange	**2092-1610**	100 (25)

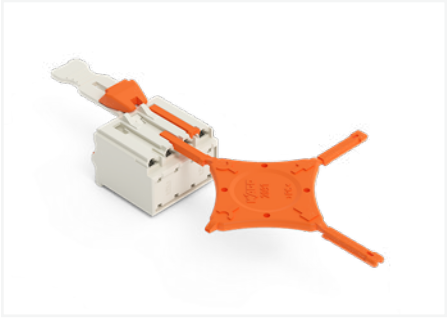

Coding a male header (via coding key carrier and two keys for male header, see symbol).



Coding a female connector (via coding key carrier and two keys for female connector, see symbol).

PU = packaging unit; SPU = subpackaging unit

Gripping plate ▸ Color: light gray

Pin spacing: 3.5 mm / 0.138 inches



2091-1602

Width	Item No.	PU (SPU)
6 mm	**2091-1600**	100 (25)
6 mm	**2091-1601**	100 (25)
13 mm	**2091-1602**	100 (25)
27 mm	**2091-1603**	100 (25)

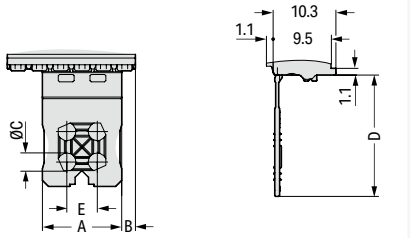

Pole No.	A	B	C	D	E
2	6	0.45	–	17	–
3	6	2.20	–	17	–
4	6	2.20	–	17	–
5	13	2.25	3.0	20	5
6	13	2.25	3.0	20	5
7	13	5.75	3.0	20	5
8	13	5.75	3.0	20	5
10	27	2.25	4.2	25	8
12	27	5.75	4.2	25	8

Pin spacing: 5 mm / 0.197 inches



2091-1602

Width	Item No.	PU (SPU)
7 mm	**2092-1600**	100 (25)
12 mm	**2092-1601**	100 (25)
22 mm	**2092-1602**	100 (25)
42 mm	**2092-1603**	100 (25)

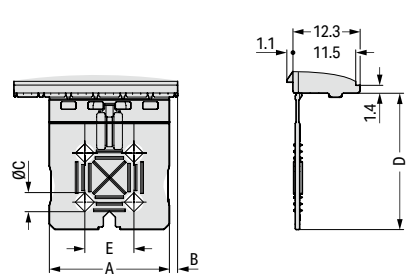

Pole No.	A	B	C	D	E
2	7	1.5	–	20	–
3	12	1.5	–	20	–
4	12	1.5	–	20	–
5	22	1.5	3.5	25	9
6	22	1.5	3.5	25	9
7	22	6.5	3.5	25	9
8	22	6.5	3.5	25	9
9	42	1.5	5.0	35	19
10	42	1.5	5.0	35	19
12	42	6.5	5.0	35	19

Pin spacing: 7.5 mm / 0.295 inches



2091-1602

Width	Item No.	PU (SPU)
7 mm	**2092-3600**	100 (25)
12 mm	**2092-3601**	100 (25)
22 mm	**2092-3602**	100 (25)

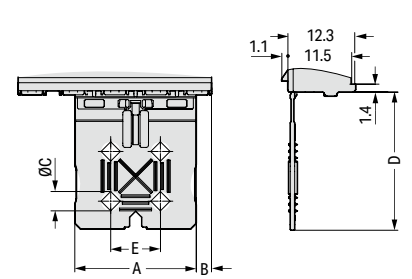

Pole No.	A	B	C	D	E
2	7	2.75	–	20	–
3	12	4	–	20	–
4	22	2.75	3.5	25	9
5	22	2.75	3.5	25	9

PU = packaging unit; SPU = subpackaging unit; Dimensions in mm

Gripping plate ▸ with sliding connector release ▸ Color: light gray

Pin spacing: 3.5 mm / 0.138 inches



2092-1601/002-000

Width	Item No.	PU (SPU)
6 mm	**2091-1600/002-000**	100 (25)
6 mm	**2091-1601/002-000**	100 (25)
13 mm	**2091-1602/002-000**	100 (25)
27 mm	**2091-1603/002-000**	100 (25)

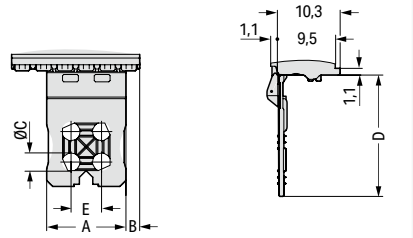

Pole No.	A	B	C	D	E
2	6	0,45	–	17	–
3	6	2,20	–	17	–
4	6	2,20	–	17	–
5	13	2,25	3,0	20	5
6	13	2,25	3,0	20	5
7	13	5,75	3,0	20	5
8	13	5,75	3,0	20	5
10	27	2,25	4,2	25	8
12	27	5,75	4,2	25	8

Pin spacing: 5 mm / 0.197 inches



2092-1601/002-000

Width	Item No.	PU (SPU)
7 mm	**2092-1600/002-000**	100 (25)
12 mm	**2092-1601/002-000**	100 (25)
22 mm	**2092-1602/002-000**	100 (25)
42 mm	**2092-1603/002-000**	100 (25)

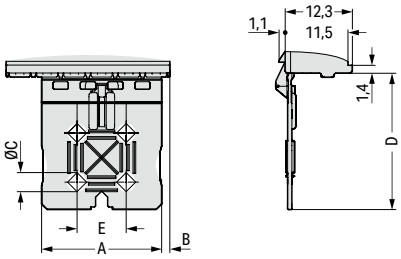

Pole No.	A	B	C	D	E
2	7	1,5	–	20	–
3	12	1,5	–	20	–
4	12	1,5	–	20	–
5	22	1,5	3,5	25	9
6	22	1,5	3,5	25	9
7	22	6,5	3,5	25	9
8	22	6,5	3,5	25	9
9	42	1,5	5,0	35	19
10	42	1,5	5,0	35	19
12	42	6,5	5,0	35	19

Pin spacing: 7.5 mm / 0.295 inches



2092-1601/002-000

Width	Item No.	PU (SPU)
7 mm	**2092-3600/002-000**	100 (25)
12 mm	**2092-3601/002-000**	100 (25)
22 mm	**2092-3602/002-000**	100 (25)

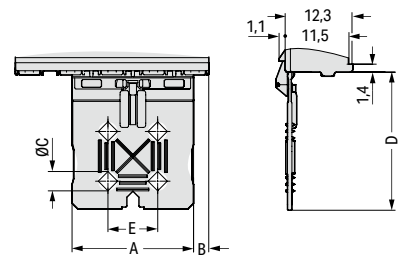

Pole No.	A	B	C	D	E
2	7	2,75	–	20	–
3	12	4	–	20	–
4	22	2,75	3,5	25	9
5	22	2,75	3,5	25	9

PU = packaging unit; SPU = subpackaging unit; Dimensions in mm

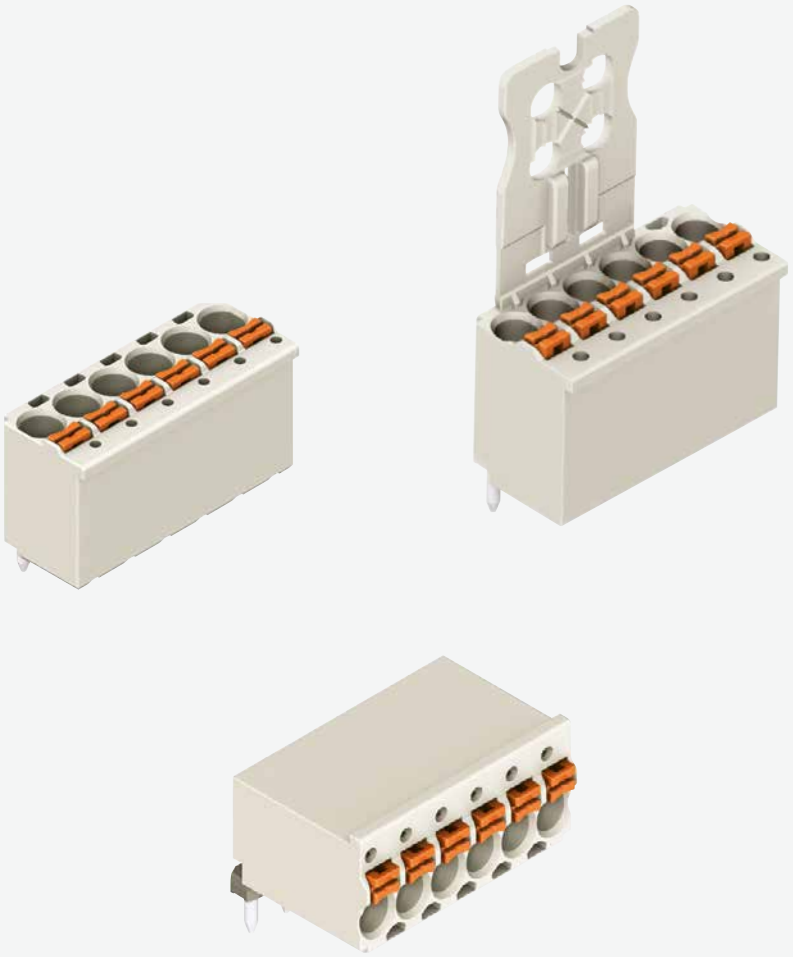

picoMAX® eCOM

picoMAX® eCom

Pin spacing: 3.5 mm, 5.0 mm, 7.5 mm ▸ 1.5 mm²

		Pin spacing	Page
	1-conductor THT female connector ▸ Actuation type: Push-button ▸ Push-In CAGE CLAMP®	3,5 mm	968
	1-conductor THR female connector ▸ Actuation type: Push-button ▸ Push-In CAGE CLAMP®	3,5 mm	972
	1-conductor THT female connector ▸ Actuation type: Push-button ▸ Push-In CAGE CLAMP®	5 mm	976
	1-conductor THR female connector ▸ Actuation type: Push-button ▸ Push-In CAGE CLAMP®	5 mm	980
	1-conductor THT female connector ▸ Actuation type: Push-button ▸ Push-In CAGE CLAMP®	7,5 mm	984
	1-conductor THR female connector ▸ Actuation type: Push-button ▸ Push-In CAGE CLAMP®	7,5 mm	988
	Accessories and Tools		1063

picoMAX® eCom Pin Spacing: 3.5 mm, 5 mm and 7.5 mm
Description and Installation



Testing with 1 mm Ø test pin, tip contact.

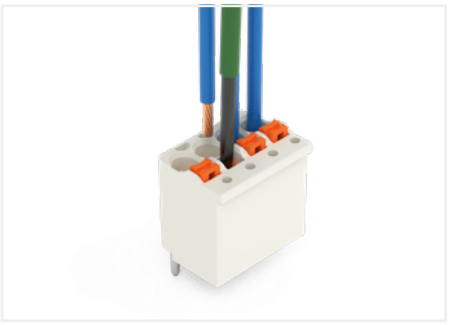

Terminating fine-stranded conductors and removing all conductor types via push-buttons.

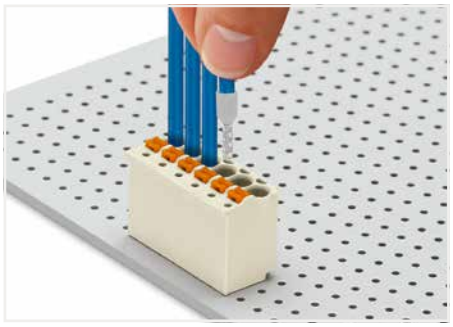

Inserting solid and ferruled conductors via push-in termination



Connection can be placed directly on the PCB as a terminal block

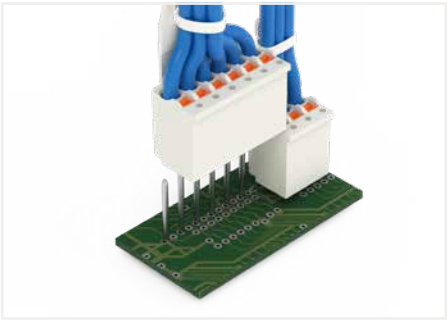

Pluggable if required

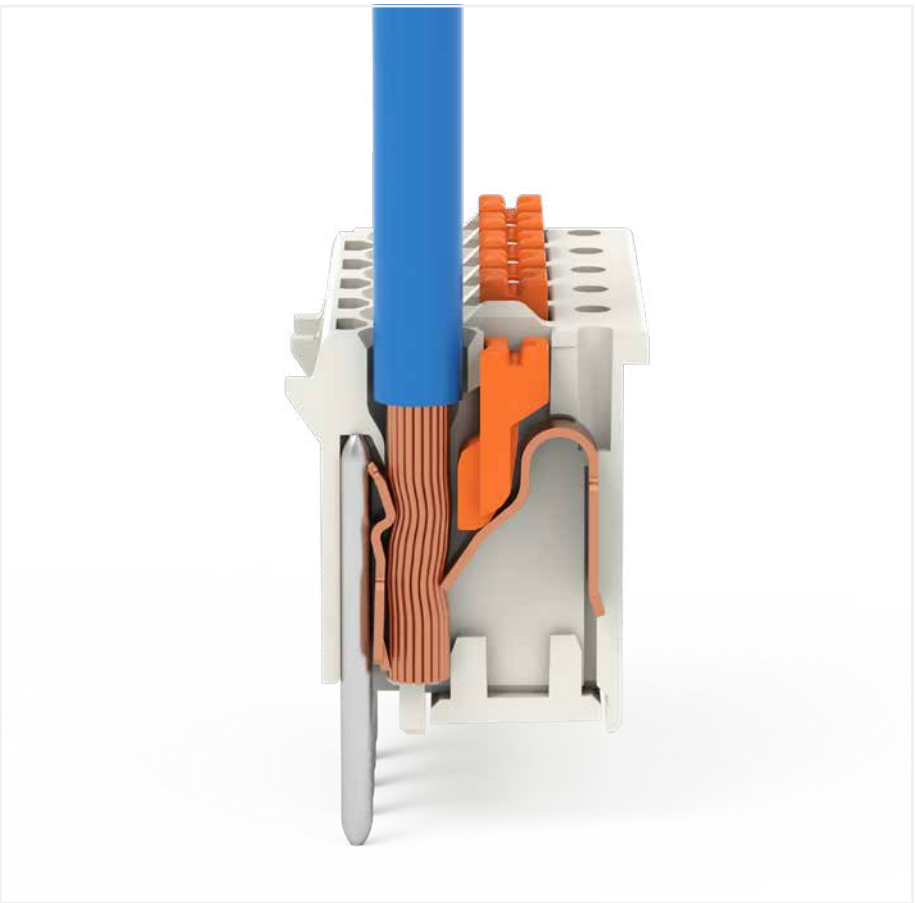

picoMAX® eCom

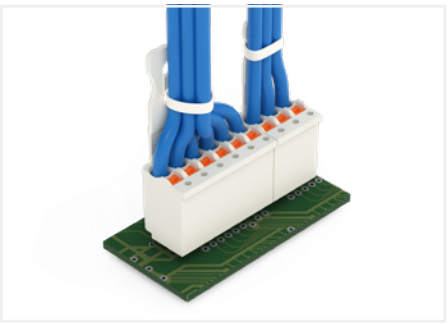

Plugging without loss of pin spacing



Pole marking via direct printing perpendicular to conductor entry.



Pole marking via direct printing parallel to conductor entry.

1-conductor THT female connector angled ▸ *picoMAX® eCOM* 3.5 ▸ 2091 Series

Pin spacing: 3.5 mm / 0.138 inches ▸ Actuation type: Push-button ▸ Push-in CAGE CLAMP® ▸ Color: light gray

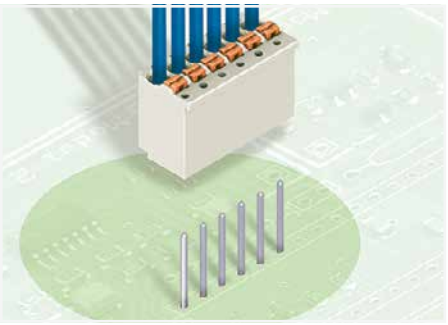

- Universal connection for all conductor types
- Simple, push-in termination of solid and ferruled conductors
- Easy-to-use design does not require special tools
- Ability to wire while mated or unmated
- Integrated test ports for testing parallel to conductor entry
- Custom-installed solder pins

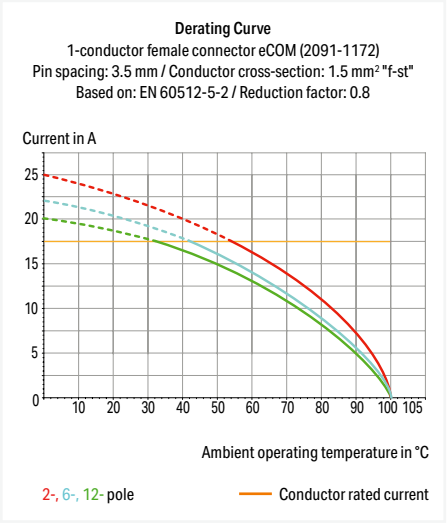

Electrical data			
Ratings per	**IEC/EN 60664-1**		
Overvoltage category	III	III	II
Pollution degree	3	2	2
Nominal voltage	160 V	160 V	320 V
Rated impulse withstand voltage	2.5 kV	2.5 kV	2.5 kV
Rated current	10 A	10 A	10 A
Approvals per	**UL 1059**		
Use group	B	C	D
Rated voltage	300 V	-	300 V
Rated current	10 A	-	10 A

Connection Data	
Connection technology	Push-in CAGE CLAMP®
Strip length	8 … 9 mm / 0.31 … 0.35 inches
Solid conductor	0.2 … 1.5 mm² / 24 … 14 AWG
Fine-stranded conductor	0.2 … 1.5 mm² / 24 … 14 AWG
Fine-stranded conductor; with insulated ferrule	0.25 … 0.75 mm²
Fine-stranded conductor; with uninsulated ferrule	0.25 … 1.5 mm²

Material data	
Material group	I
Insulation material (main housing)	Polyphthalamide (PPA GF)
Flammability class per UL94	V0
Clamping spring material	Chrome-nickel spring steel (CrNi)
Contact material	Electrolytic copper (E_{Cu})
Contact Plating	Tin

Mechanical data	
Solder pin length	3.6 mm
Solder pin diameter	1 mm
Drilled hole diameter	1.2 $^{(+0.1)}$ mm

Environmental requirements	
Limit temperature range	-60 … +100 °C
Processing temperature	-35 … +60 °C

Note:
The **picoMAX® Pluggable Connection System** includes connectors without breaking capacity in accordance with DIN EN 61984. When used as intended, these connectors must not be connected/disconnected when live or under load.When used as intended, these connectors must not be connected/disconnected when live or under load. The circuit design should ensure header pins, which can be touched, are not live when unmated.
The use of ferrules is recommended for applications with higher requirements.

To prevent excessive force on the clamping point, effective cable strain relief must be used.

Ferrule	Page 1081
Test and measurement	Page 1088
Tool	Page 1072
See technical section for further information	
Approvals and corresponding ratings, visit www.wago.com	

1-conductor THT female connector angled ▸ *picoMAX® eCOM* 3.5 ▸ 2091 Series

Pin spacing: 3.5 mm / 0.138 inches ▸ Actuation type: Push-button ▸ Push-in CAGE CLAMP® ▸ Color: light gray

Mating direction to the PCB: 0 °

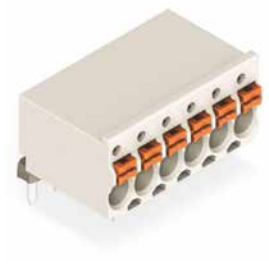

2091-1376

Pole number	Item No.	PU
2	**2091-1372**	200
3	**2091-1373**	200
4	**2091-1374**	200
5	**2091-1375**	200
6	**2091-1376**	100
7	**2091-1377**	100
8	**2091-1378**	100
10	**2091-1380**	100
12	**2091-1382**	100

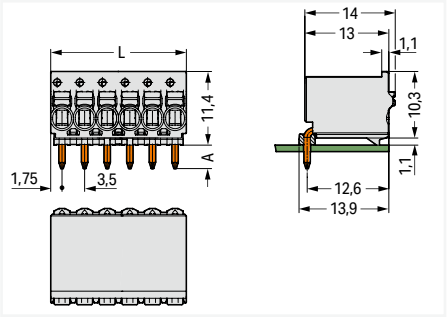

L = pole no. x pin spacing
A = 3.6 mm THT solder pin
A = 2.4 mm THR solder pin

Mating direction to the PCB: 90 °

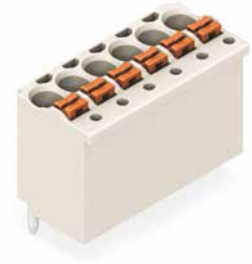

2091-1176

Pole number	Item No.	PU
2	**2091-1172**	200
3	**2091-1173**	200
4	**2091-1174**	200
5	**2091-1175**	200
6	**2091-1176**	100
7	**2091-1177**	100
8	**2091-1178**	100
10	**2091-1180**	100
12	**2091-1182**	100

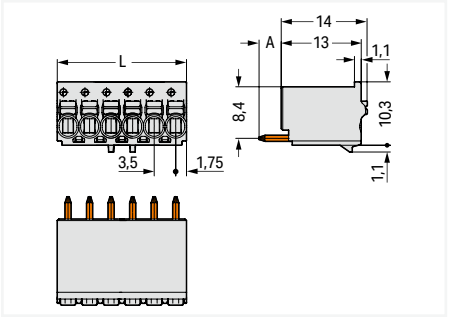

L = pole no. x pin spacing
A = 3.6 mm THT solder pin
A = 2.4 mm THR solder pin

PU = packaging unit; SPU = subpackaging unit; Dimensions in mm

1-conductor THT female connector angled ▸ *picoMAX® eCOM* 3.5 ▸ 2091 Series

Pin spacing: 3.5 mm / 0.138 inches ▸ Actuation type: Push-button ▸ Push-in CAGE CLAMP® ▸ with gripping plate ▸ Color: light gray

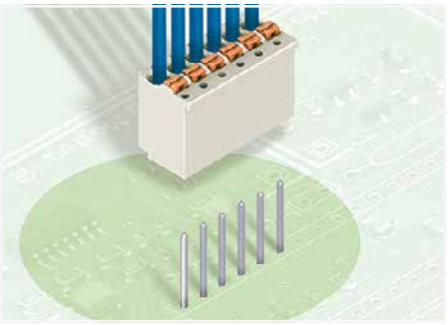

- Universal connection for all conductor types
- Simple, push-in termination of solid and ferruled conductors
- Easy-to-use design does not require special tools
- Ability to wire while mated or unmated
- Integrated test ports for testing parallel to conductor entry
- Custom-installed solder pins

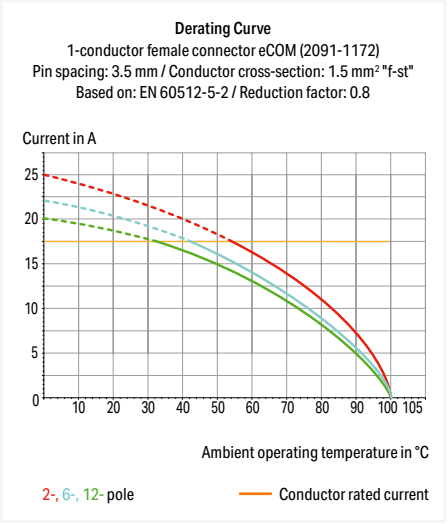

Electrical data			
Ratings per	**IEC/EN 60664-1**		
Overvoltage category	III	III	II
Pollution degree	3	2	2
Nominal voltage	160 V	160 V	320 V
Rated impulse withstand voltage	2.5 kV	2.5 kV	2.5 kV
Rated current	10 A	10 A	10 A
Approvals per	**UL 1059**		
Use group	B	C	D
Rated voltage	300 V	-	300 V
Rated current	10 A	-	10 A

Connection Data	
Connection technology	Push-in CAGE CLAMP®
Strip length	8 … 9 mm / 0.31 … 0.35 inches
Solid conductor	0.2 … 1.5 mm² / 24 … 14 AWG
Fine-stranded conductor	0.2 … 1.5 mm² / 24 … 14 AWG
Fine-stranded conductor; with insulated ferrule	0.25 … 0.75 mm²
Fine-stranded conductor; with uninsulated ferrule	0.25 … 1.5 mm²

Material data	
Material group	I
Insulation material (main housing)	Polyphthalamide (PPA GF)
Flammability class per UL94	V0
Clamping spring material	Chrome-nickel spring steel (CrNi)
Contact material	Electrolytic copper (E_{Cu})
Contact Plating	Tin

Mechanical data	
Solder pin length	3.6 mm
Solder pin diameter	1 mm
Drilled hole diameter	1.2 $^{(+0.1)}$ mm
Design	with gripping plate

Environmental requirements	
Limit temperature range	-60 … +100 °C
Processing temperature	-35 … +60 °C

Note:
The **picoMAX® Pluggable Connection System** includes connectors without breaking capacity in accordance with DIN EN 61984. When used as intended, these connectors must not be connected/disconnected when live or under load.When used as intended, these connectors must not be connected/disconnected when live or under load. The circuit design should ensure header pins, which can be touched, are not live when unmated.
The use of ferrules is recommended for applications with higher requirements.

To prevent excessive force on the clamping point, effective cable strain relief must be used.

Ferrule	Page 1081
Test and measurement	Page 1088
Tool	Page 1072

See technical section for further information

Approvals and corresponding ratings, visit www.wago.com

1-conductor THT female connector angled ▸ *picoMAX® eCOM* 3.5 ▸ 2091 Series

Pin spacing: 3.5 mm / 0.138 inches ▸ Actuation type: Push-button ▸ Push-in CAGE CLAMP® ▸ with gripping plate ▸ Color: light gray

Mating direction to the PCB: 0 °



2091-1356

Pole number	Item No.	PU
2	2091-1352	100
3	2091-1353	100
4	2091-1354	100
5	2091-1355	50
6	2091-1356	50
7	2091-1357	50
8	2091-1358	50
10	2091-1360	50
12	2091-1362	50

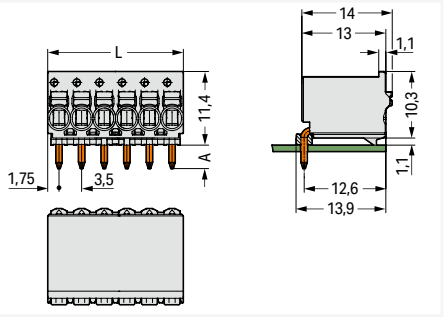

L = pole no. x pin spacing
A = 3.6 mm THT solder pin
A = 2.4 mm THR solder pin

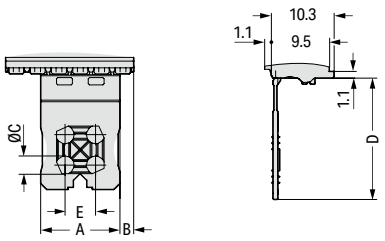

Pole No.	A	B	C	D	E
2	6	0.45	–	17	–
3	6	2.20	–	17	–
4	6	2.20	–	17	–
5	13	2.25	3.0	20	5
6	13	2.25	3.0	20	5
7	13	5.75	3.0	20	5
8	13	5.75	3.0	20	5
10	27	2.25	4.2	25	8
12	27	5.75	4.2	25	8

Mating direction to the PCB: 90 °



2091-1156

Pole number	Item No.	PU
2	2091-1152	100
3	2091-1153	100
4	2091-1154	100
5	2091-1155	50
6	2091-1156	50
7	2091-1157	50
8	2091-1158	50
10	2091-1160	50
12	2091-1162	50

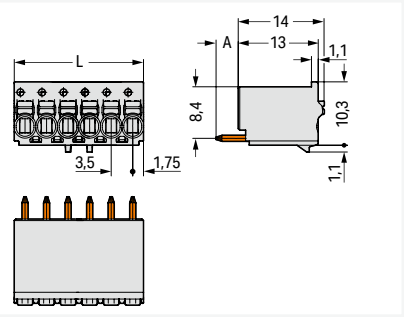

L = pole no. x pin spacing
A = 3.6 mm THT solder pin
A = 2.4 mm THR solder pin

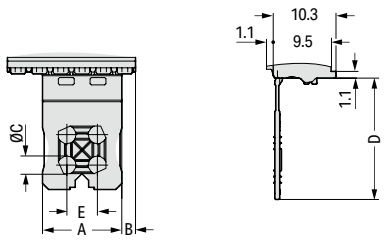

Pole No.	A	B	C	D	E
2	6	0.45	–	17	–
3	6	2.20	–	17	–
4	6	2.20	–	17	–
5	13	2.25	3.0	20	5
6	13	2.25	3.0	20	5
7	13	5.75	3.0	20	5
8	13	5.75	3.0	20	5
10	27	2.25	4.2	25	8
12	27	5.75	4.2	25	8

PU = packaging unit; SPU = subpackaging unit; Dimensions in mm

1-conductor THR female connector angled ▸ *picoMAX® eCOM* 3.5 ▸ 2091 Series

Pin spacing: 3.5 mm / 0.138 inches ▸ Actuation type: Push-button ▸ Push-in CAGE CLAMP® ▸ Color: light gray

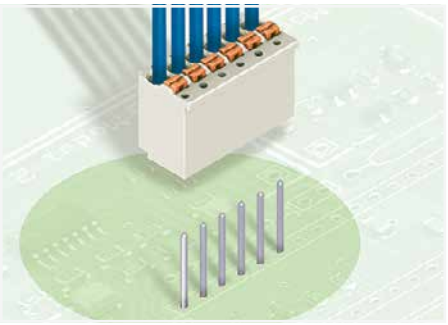

- Universal connection for all conductor types
- Simple, push-in termination of solid and ferruled conductors
- Easy-to-use design does not require specialty tools
- Ability to wire while mated or unmated
- Integrated test ports for testing parallel to conductor entry
- Factory-installed, straight or angled solder pins allow horizontal or vertical mounting to the PCB

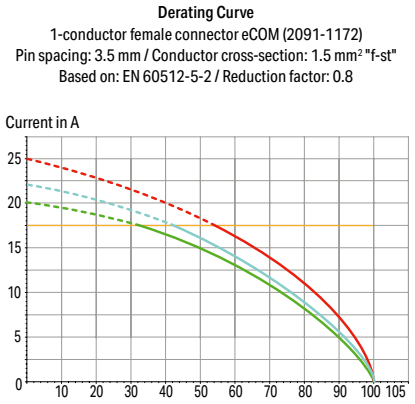

Electrical data			
Ratings per	**IEC/EN 60664-1**		
Overvoltage category	III	III	II
Pollution degree	3	2	2
Nominal voltage	160 V	160 V	320 V
Rated impulse withstand voltage	2.5 kV	2.5 kV	2.5 kV
Rated current	10 A	10 A	10 A
Approvals per	**UL 1059**		
Use group	B	C	D
Rated voltage	300 V	-	300 V
Rated current	10 A	-	10 A

Connection Data	
Connection technology	Push-in CAGE CLAMP®
Solid conductor	0.2 … 1.5 mm² / 24 … 14 AWG
Fine-stranded conductor	0.2 … 1.5 mm² / 24 … 14 AWG
Fine-stranded conductor; with insulated ferrule	0.25 … 0.75 mm²
Fine-stranded conductor; with uninsulated ferrule	0.25 … 1.5 mm²

Material data	
Material group	I
Insulation material (main housing)	Polyphthalamide (PPA GF)
Flammability class per UL94	V0
Clamping spring material	Chrome-nickel spring steel (CrNi)
Contact material	Electrolytic copper (E_{Cu})
Contact Plating	Silver

Mechanical data	
Solder pin length	2.4 mm
Solder pin diameter	1 mm
Plated through-hole diameter (THR)	1.2 $^{(+0.1)}$ mm

Environmental requirements	
Limit temperature range	-60 … +100 °C
Processing temperature	-35 … +60 °C

Note:
The **picoMAX® Pluggable Connection System** includes connectors without breaking capacity in accordance with DIN EN 61984. When used as intended, these connectors must not be connected/disconnected when live or under load.When used as intended, these connectors must not be connected/ disconnected when live or under load. The circuit design should ensure header pins, which can be touched, are not live when unmated.
The use of ferrules is recommended for applications with higher requirements.

To prevent excessive force on the clamping point, effective cable strain relief must be used.

Ferrule	Page 1081
Test and measurement	Page 1088
Tool	Page 1072
THR soldering	Page 900
See technical section for further information	
Approvals and corresponding ratings, visit www.wago.com	

1-conductor THR female connector angled ▸ *picoMAX® eCOM* 3.5 ▸ 2091 Series

Pin spacing: 3.5 mm / 0.138 inches ▸ Actuation type: Push-button ▸ Push-in CAGE CLAMP® ▸ Color: light gray

Mating direction to the PCB: 0 °

Suitable for automated assembly



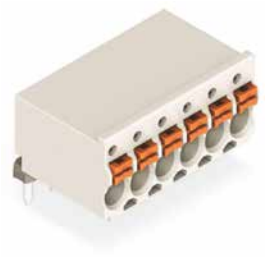

2091-2376/200-000

Pole number	Item No.	PU
2	**2091-2372/200-000**	200
3	**2091-2373/200-000**	200
4	**2091-2374/200-000**	200
5	**2091-2375/200-000**	200
6	**2091-2376/200-000**	100
7	**2091-2377/200-000**	100
8	**2091-2378/200-000**	100
10	**2091-2380/200-000**	100
12	**2091-2382/200-000**	100

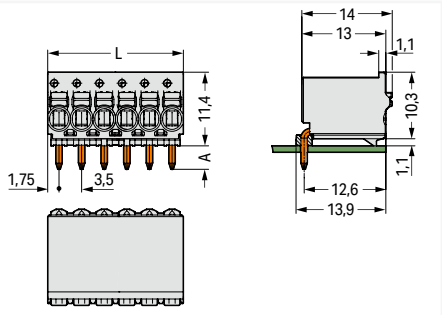

L = pole no. x pin spacing
A = 3.6 mm THT solder pin
A = 2.4 mm THR solder pin

2091-2376/200-000/997-406

Pole number	Item No.	PU
2	**2091-2372/200-000/997-404**	200
3	**2091-2373/200-000/997-404**	200
4	**2091-2374/200-000/997-404**	200
5	**2091-2375/200-000/997-406**	200
6	**2091-2376/200-000/997-406**	200
7	**2091-2377/200-000/997-406**	200
8	**2091-2378/200-000/997-406**	200
10	**2091-2380/200-000/997-407**	200
12	**2091-2382/200-000/997-407**	200

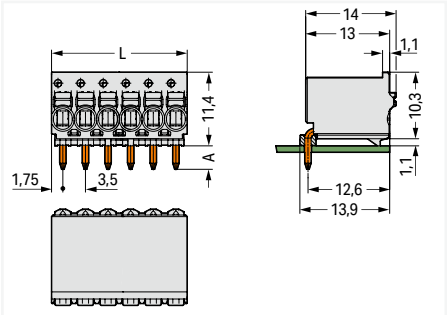

L = pole no. x pin spacing
A = 3.6 mm THT solder pin
A = 2.4 mm THR solder pin

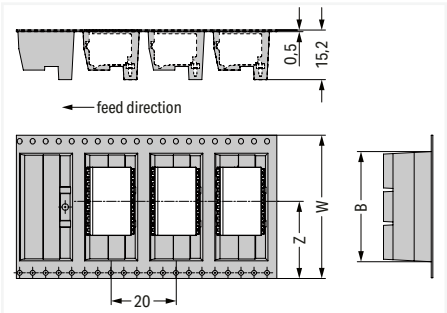

Pole no.	W	B	Z
2	24	15,6	13,25
3	24	16,5	15
4	44	16,5	13,3
5	44	34	22
6	44	34	23,7
7	44	34	22
8	44	34	23,7
10	56	44,5	28
12	56	44,5	28

PU = packaging unit; SPU = subpackaging unit; Dimensions in mm

1-conductor THR female connector angled ▸ *picoMAX*® *eCOM* 3.5 ▸ 2091 Series

Pin spacing: 3.5 mm / 0.138 inches ▸ Actuation type: Push-button ▸ Push-in CAGE CLAMP® ▸ Color: light gray

Mating direction to the PCB: 90 °

Suitable for automated assembly

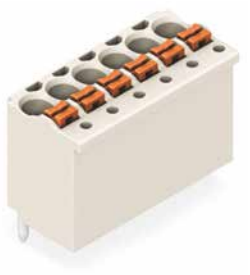

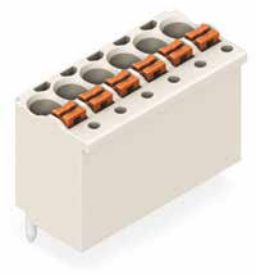

2091-2176/200-000

Pole number	Item No.	PU
2	2091-2172/200-000	200
3	2091-2173/200-000	200
4	2091-2174/200-000	200
5	2091-2175/200-000	200
6	2091-2176/200-000	100
7	2091-2177/200-000	100
8	2091-2178/200-000	100
10	2091-2180/200-000	100
12	2091-2182/200-000	100

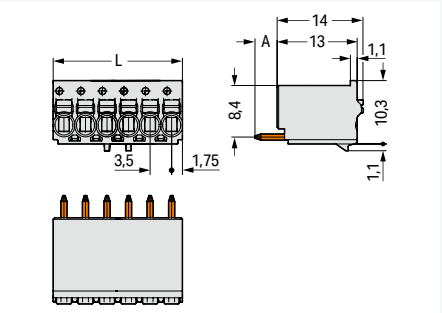

L = pole no. x pin spacing
A = 3.6 mm THT solder pin
A = 2.4 mm THR solder pin

2091-2176/200-000/997-407

Pole number	Item No.	PU
2	2091-2172/200-000/997-404	130
3	2091-2173/200-000/997-404	130
4	2091-2174/200-000/997-405	130
5	2091-2175/200-000/997-405	130
6	2091-2176/200-000/997-407	130
7	2091-2177/200-000/997-407	130
8	2091-2178/200-000/997-407	130
10	2091-2180/200-000/997-407	130
12	2091-2182/200-000/997-407	130

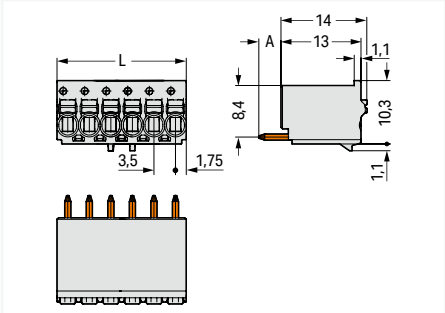

L = pole no. x pin spacing
A = 3.6 mm THT solder pin
A = 2.4 mm THR solder pin

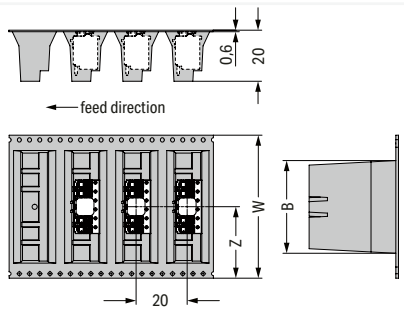

Pole no.	W	B	Z
2	24	17,9	13,2
3	24	18,5	15,1
4	32	20,2	16
5	32	20,7	17,7
6	56	45,2	28
7	56	45,2	31,4
8	56	45,2	27,9
10	56	45,2	27,9
12	56	45,2	27,9

PU = packaging unit; SPU = subpackaging unit; Dimensions in mm

1-conductor THT female connector angled ▸ *picoMAX® eCOM* 5.0 ▸ 2092 Series

Pin spacing: 5 mm / 0.197 inches ▸ Actuation type: Push-button ▸ Push-in CAGE CLAMP® ▸ Color: light gray

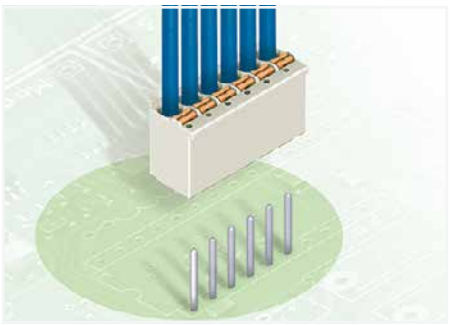

- Universal connection for all conductor types
- Simple, push-in termination of solid and ferruled conductors
- Easy-to-use design does not require special tools
- Ability to wire while mated or unmated
- Integrated test ports for testing parallel to conductor entry
- Custom-installed solder pins

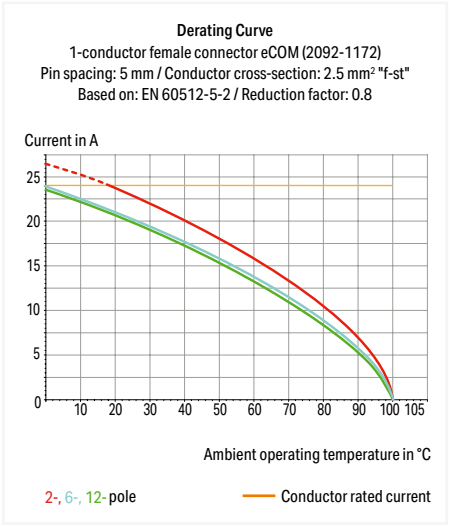

Electrical data			
Ratings per	**IEC/EN 60664-1**		
Overvoltage category	III	III	II
Pollution degree	3	2	2
Nominal voltage	250 V	320 V	630 V
Rated impulse withstand voltage	4 kV	4 kV	4 kV
Rated current	16 A	16 A	16 A
Approvals per	**UL 1059**		
Use group	B	C	D
Rated voltage	300 V	-	300 V
Rated current	15 A	-	10 A

Connection Data	
Connection technology	Push-in CAGE CLAMP®
Strip length	9 … 10 mm / 0.35 … 0.39 inches
Solid conductor	0.2 … 2.5 mm² / 24 … 12 AWG
Fine-stranded conductor	0.2 … 2.5 mm² / 24 … 12 AWG
Fine-stranded conductor; with insulated ferrule	0.25 … 1.5 mm²
Fine-stranded conductor; with uninsulated ferrule	0.25 … 2.5 mm²

Material data	
Material group	I
Insulation material (main housing)	Polyphthalamide (PPA GF)
Flammability class per UL94	V0
Clamping spring material	Chrome-nickel spring steel (CrNi)
Contact material	Electrolytic copper (E_{Cu})
Contact Plating	Tin

Mechanical data	
Solder pin length	3.6 mm
Solder pin diameter	1.4 mm
Drilled hole diameter	1.6 $^{(+0.1)}$ mm

Environmental requirements	
Limit temperature range	-60 … +100 °C
Processing temperature	-35 … +60 °C

Note:
The **picoMAX® Pluggable Connection System** includes connectors without breaking capacity in accordance with DIN EN 61984. When used as intended, these connectors must not be connected/disconnected when live or under load.When used as intended, these connectors must not be connected/ disconnected when live or under load. The circuit design should ensure header pins, which can be touched, are not live when unmated.
The use of ferrules is recommended for applications with higher requirements.

To prevent excessive force on the clamping point, effective cable strain relief must be used.

Ferrule	Page 1081
Test and measurement	Page 1088
Tool	Page 1072
See technical section for further information	
Approvals and corresponding ratings, visit www.wago.com	

1-conductor THT female connector angled ▸ *picoMAX® eCOM* 5.0 ▸ 2092 Series

Pin spacing: 5 mm / 0.197 inches ▸ Actuation type: Push-button ▸ Push-in CAGE CLAMP® ▸ Color: light gray

Mating direction to the PCB: 0 °

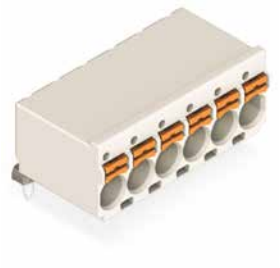

2092-1376

Pole number	Item No.	PU
2	**2092-1372**	200
3	**2092-1373**	200
4	**2092-1374**	200
5	**2092-1375**	200
6	**2092-1376**	100
7	**2092-1377**	100
8	**2092-1378**	100
9	**2092-1379**	100
10	**2092-1380**	100
12	**2092-1382**	100

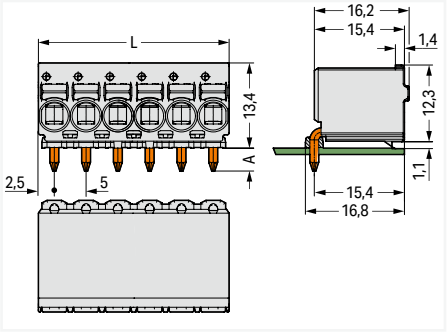

L = pole no. x pin spacing
A = 3.6 mm THT solder pin
A = 2.4 mm THR solder pin

Mating direction to the PCB: 90 °

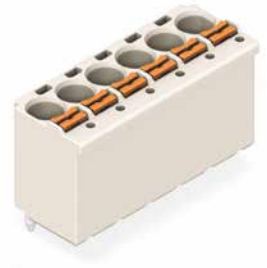

2092-1176

Pole number	Item No.	PU
2	**2092-1172**	200
3	**2092-1173**	200
4	**2092-1174**	200
5	**2092-1175**	200
6	**2092-1176**	100
7	**2092-1177**	100
8	**2092-1178**	100
9	**2092-1179**	100
10	**2092-1180**	100
12	**2092-1182**	100

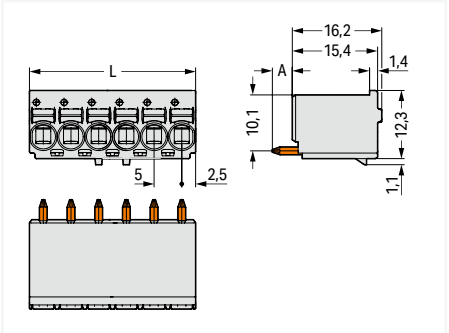

L = pole no. x pin spacing
A = 3.6 mm THT solder pin
A = 2.4 mm THR solder pin

12

PU = packaging unit; SPU = subpackaging unit; Dimensions in mm

1-conductor THT female connector angled ▸ *picoMAX® eCOM* 5.0 ▸ 2092 Series

Pin spacing: 5 mm / 0.197 inches ▸ Actuation type: Push-button ▸ Push-in CAGE CLAMP® ▸ with gripping plate ▸ Color: light gray

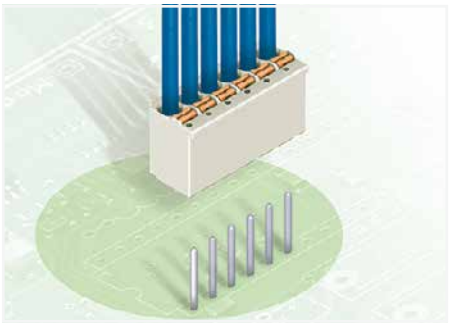

- Universal connection for all conductor types
- Simple, push-in termination of solid and ferruled conductors
- Easy-to-use design does not require special tools
- Ability to wire while mated or unmated
- Integrated test ports for testing parallel to conductor entry
- Custom-installed solder pins

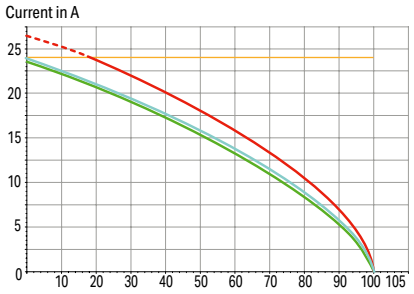

Electrical data			
Ratings per	**IEC/EN 60664-1**		
Overvoltage category	III	III	II
Pollution degree	3	2	2
Nominal voltage	250 V	320 V	630 V
Rated impulse withstand voltage	4 kV	4 kV	4 kV
Rated current	16 A	16 A	16 A
Approvals per	**UL 1059**		
Use group	B	C	D
Rated voltage	300 V	-	300 V
Rated current	15 A	-	10 A

Connection Data	
Connection technology	Push-in CAGE CLAMP®
Strip length	9 … 10 mm / 0.35 … 0.39 inches
Solid conductor	0.2 … 2.5 mm² / 24 … 12 AWG
Fine-stranded conductor	0.2 … 2.5 mm² / 24 … 12 AWG
Fine-stranded conductor; with insulated ferrule	0.25 … 1.5 mm²
Fine-stranded conductor; with uninsulated ferrule	0.25 … 2.5 mm²

Material data	
Material group	I
Insulation material (main housing)	Polyphthalamide (PPA GF)
Flammability class per UL94	V0
Clamping spring material	Chrome-nickel spring steel (CrNi)
Contact material	Electrolytic copper (E_{Cu})
Contact Plating	Tin

Mechanical data	
Solder pin length	3.6 mm
Solder pin diameter	1.4 mm
Drilled hole diameter	1.6 $^{(+0.1)}$ mm
Design	with gripping plate

Environmental requirements	
Limit temperature range	-60 … +100 °C
Processing temperature	-35 … +60 °C

Note:
The **picoMAX® Pluggable Connection System** includes connectors without breaking capacity in accordance with DIN EN 61984. When used as intended, these connectors must not be connected/disconnected when live or under load.When used as intended, these connectors must not be connected/disconnected when live or under load. The circuit design should ensure header pins, which can be touched, are not live when unmated.
The use of ferrules is recommended for applications with higher requirements.

To prevent excessive force on the clamping point, effective cable strain relief must be used.

Ferrule	Page 1081
Test and measurement	Page 1088
Tool	Page 1072
See technical section for further information	
Approvals and corresponding ratings, visit www.wago.com	

1-conductor THT female connector angled ▸ *picoMAX® eCOM* 5.0 ▸ 2092 Series

Pin spacing: 5 mm / 0.197 inches ▸ Actuation type: Push-button ▸ Push-in CAGE CLAMP® ▸ with gripping plate ▸ Color: light gray

Mating direction to the PCB: 0 °



2092-1356

Pole number	Item No.	PU
2	2092-1352	100
3	2092-1353	100
4	2092-1354	100
5	2092-1355	50
6	2092-1356	50
7	2092-1357	50
8	2092-1358	50
9	2092-1359	50
10	2092-1360	50
12	2092-1362	50

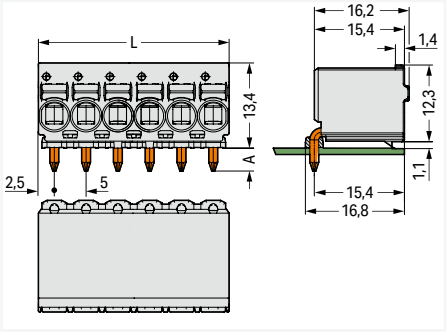

L = pole no. x pin spacing
A = 3.6 mm THT solder pin
A = 2.4 mm THR solder pin

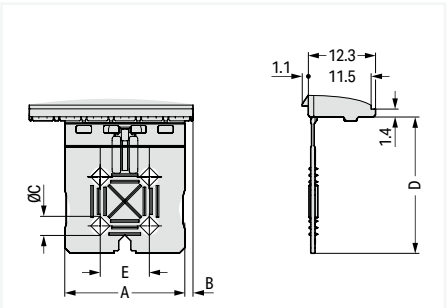

Pole No.	A	B	C	D	E
2	7	1.5	–	20	–
3	12	1.5	–	20	–
4	12	1.5	–	20	–
5	22	1.5	3.5	25	9
6	22	1.5	3.5	25	9
7	22	6.5	3.5	25	9
8	22	6.5	3.5	25	9
9	42	1.5	5.0	35	19
10	42	1.5	5.0	35	19
12	42	6.5	5.0	35	19

Mating direction to the PCB: 90 °



2092-1156

Pole number	Item No.	PU
2	2092-1152	100
3	2092-1153	100
4	2092-1154	100
5	2092-1155	50
6	2092-1156	50
7	2092-1157	50
8	2092-1158	50
9	2092-1159	50
10	2092-1160	50
12	2092-1162	50

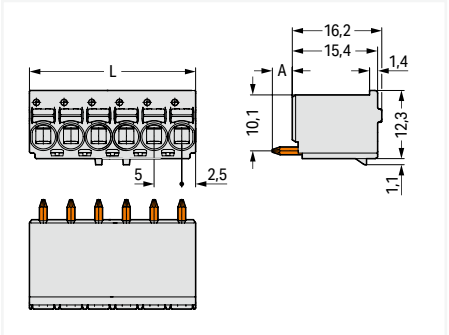

L = pole no. x pin spacing
A = 3.6 mm THT solder pin
A = 2.4 mm THR solder pin

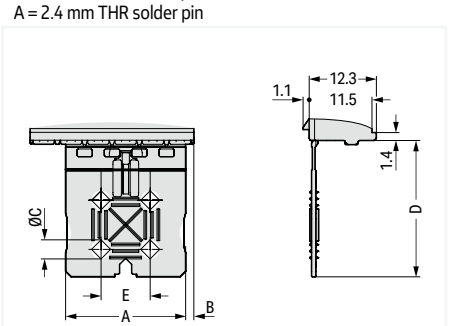

Pole No.	A	B	C	D	E
2	7	1.5	–	20	–
3	12	1.5	–	20	–
4	12	1.5	–	20	–
5	22	1.5	3.5	25	9
6	22	1.5	3.5	25	9
7	22	6.5	3.5	25	9
8	22	6.5	3.5	25	9
9	42	1.5	5.0	35	19
10	42	1.5	5.0	35	19
12	42	6.5	5.0	35	19

PU = packaging unit; SPU = subpackaging unit; Dimensions in mm

1-conductor THR female connector angled ▸ *picoMAX® eCOM* 5.0 ▸ 2092 Series

Pin spacing: 5 mm / 0.197 inches ▸ Actuation type: Push-button ▸ Push-in CAGE CLAMP® ▸ Color: light gray

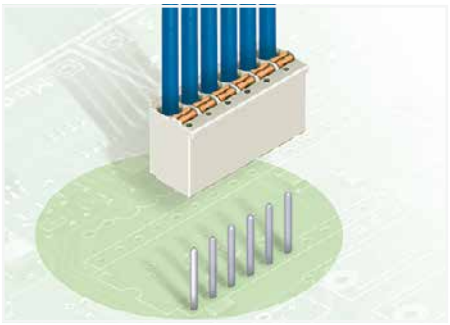

- Universal connection for all conductor types
- Simple, push-in termination of solid and ferruled conductors
- Easy-to-use design does not require specialty tools
- Ability to wire while mated or unmated
- Integrated test ports for testing parallel to conductor entry
- Factory-installed, straight or angled solder pins allow horizontal or vertical mounting to the PCB

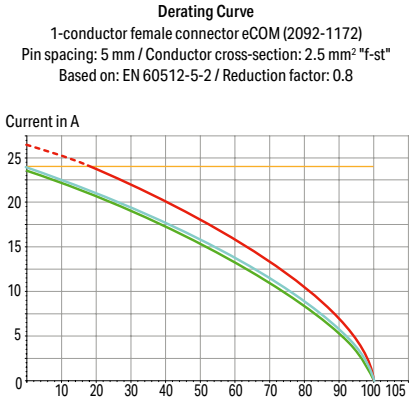

Electrical data			
Ratings per	**IEC/EN 60664-1**		
Overvoltage category	III	III	II
Pollution degree	3	2	2
Nominal voltage	250 V	320 V	630 V
Rated impulse withstand voltage	4 kV	4 kV	4 kV
Rated current	16 A	16 A	16 A
Approvals per	**UL 1059**		
Use group	B	C	D
Rated voltage	300 V	-	300 V
Rated current	15 A	-	10 A

Connection Data	
Connection technology	Push-in CAGE CLAMP®
Strip length	9 … 10 mm / 0.35 … 0.39 inches
Solid conductor	0.2 … 2.5 mm² / 24 … 12 AWG
Fine-stranded conductor	0.5 … 2.5 mm² / 20 … 12 AWG
Fine-stranded conductor; with insulated ferrule	0.25 … 1.5 mm²
Fine-stranded conductor; with uninsulated ferrule	0.25 … 2.5 mm²

Material data	
Material group	I
Insulation material (main housing)	Polyphthalamide (PPA GF)
Flammability class per UL94	V0
Clamping spring material	Chrome-nickel spring steel (CrNi)
Contact material	Electrolytic copper (E_{Cu})
Contact Plating	Silver

Mechanical data	
Solder pin length	2.4 mm
Solder pin diameter	1.4 mm
Plated through-hole diameter (THR)	1.6 $^{(+0.1)}$ mm

Environmental requirements	
Limit temperature range	-60 … +100 °C
Processing temperature	-35 … +60 °C

Note:
The **picoMAX® Pluggable Connection System** includes connectors without breaking capacity in accordance with DIN EN 61984. When used as intended, these connectors must not be connected/disconnected when live or under load.When used as intended, these connectors must not be connected/ disconnected when live or under load. The circuit design should ensure header pins, which can be touched, are not live when unmated.
The use of ferrules is recommended for applications with higher requirements.

To prevent excessive force on the clamping point, effective cable strain relief must be used.

Ferrule	Page 1081
Test and measurement	Page 1088
Tool	Page 1072
THR soldering	Page 900
See technical section for further information	
Approvals and corresponding ratings, visit www.wago.com	

1-conductor THR female connector angled ▸ *picoMAX® eCOM* 5.0 ▸ 2092 Series

Pin spacing: 5 mm / 0.197 inches ▸ Actuation type: Push-button ▸ Push-in CAGE CLAMP® ▸ Color: light gray

Mating direction to the PCB: 0 °

Suitable for automated assembly

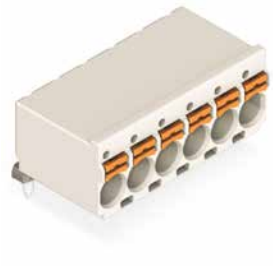



2092-2376/200-000

Pole number	Item No.	PU
2	2092-2372/200-000	200
3	2092-2373/200-000	200
4	2092-2374/200-000	200
5	2092-2375/200-000	200
6	2092-2376/200-000	100
7	2092-2377/200-000	100
8	2092-2378/200-000	100
9	2092-2379/200-000	100
10	2092-2380/200-000	100
12	2092-2382/200-000	100

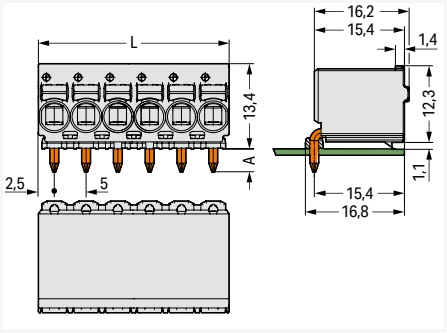

L = pole no. x pin spacing
A = 3.6 mm THT solder pin
A = 2.4 mm THR solder pin

2092-2376/200-000/997-407

Pole number	Item No.	PU (SPU)
2	2092-2372/200-000/997-404	120 (120)
3	2092-2373/200-000/997-405	120 (120)
4	2092-2374/200-000/997-405	120 (120)
5	2092-2375/200-000/997-407	120 (120)
6	2092-2376/200-000/997-407	120 (120)
7	2092-2377/200-000/997-407	120 (120)
8	2092-2378/200-000/997-407	120 (120)
9	2092-2379/200-000/997-409	140
10	2092-2380/200-000/997-409	140
12	2092-2382/200-000/997-409	140

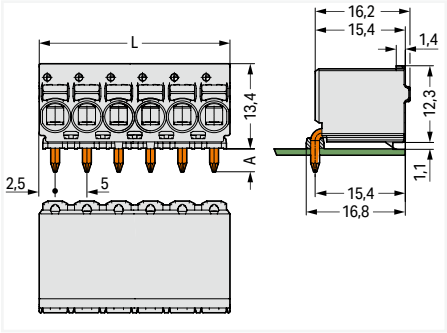

L = pole no. x pin spacing
A = 3.6 mm THT solder pin
A = 2.4 mm THR solder pin

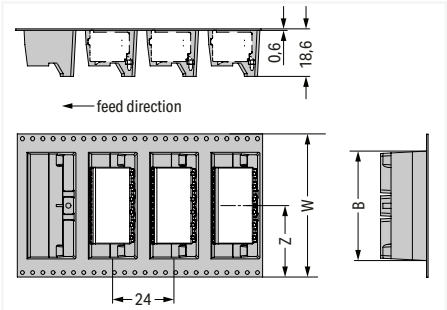

Pole no.	W	B	Z
2	24	18	13,2
3	32	22,7	18,4
4	32	22,7	15,9
5	56	42,8	30,4
6	56	42,8	28
7	56	42,8	30,4
8	56	42,8	28
9	88	72,9	46,4
10	88	72,9	44
12	88	72,9	44

PU = packaging unit; SPU = subpackaging unit; Dimensions in mm

1-conductor THR female connector angled ▸ *picoMAX*® *eCOM* 5.0 ▸ 2092 Series

Pin spacing: 5 mm / 0.197 inches ▸ Actuation type: Push-button ▸ Push-in CAGE CLAMP® ▸ Color: light gray

Mating direction to the PCB: 90 °

Suitable for automated assembly





2092-2176/200-000

Pole number	Item No.	PU
2	2092-2172/200-000	200
3	2092-2173/200-000	200
4	2092-2174/200-000	200
5	2092-2175/200-000	200
6	2092-2176/200-000	100
7	2092-2177/200-000	100
8	2092-2178/200-000	100
9	2092-2179/200-000	100
10	2092-2180/200-000	100
12	2092-2182/200-000	100

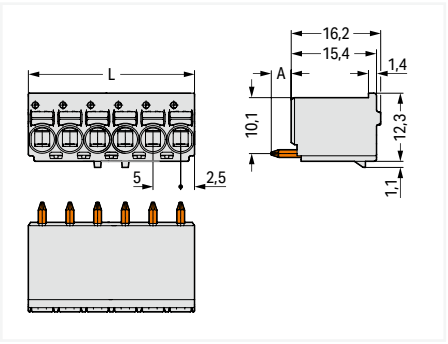

L = pole no. x pin spacing
A = 3.6 mm THT solder pin
A = 2.4 mm THR solder pin

2092-2176/200-000/997-407

Pole number	Item No.	PU
2	2092-2172/200-000/997-405	80
3	2092-2173/200-000/997-406	80
4	2092-2174/200-000/997-406	80
5	2092-2175/200-000/997-407	80
6	2092-2176/200-000/997-407	80
7	2092-2177/200-000/997-407	80
8	2092-2178/200-000/997-407	80
9	2092-2179/200-000/997-409	80
10	2092-2180/200-000/997-409	80
12	2092-2182/200-000/997-409	80

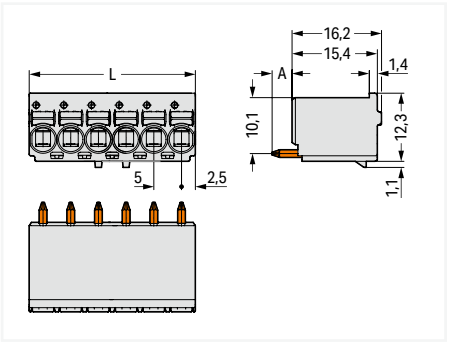

L = pole no. x pin spacing
A = 3.6 mm THT solder pin
A = 2.4 mm THR solder pin

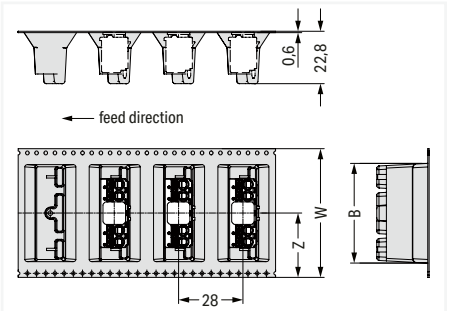

Pole no.	W	B	Z
2	32	22,6	16
3	44	23	19,5
4	44	23,4	22
5	56	43,4	28
6	56	43,4	28
7	56	43,4	28
8	56	43,4	28
9	88	63,5	44
10	88	63,5	44
12	88	63,5	44

PU = packaging unit; SPU = subpackaging unit; Dimensions in mm

1-conductor THT female connector angled ▸ *picoMAX® eCOM* 7.5 ▸ 2092 Series

Pin spacing: 7.5 mm / 0.295 inches ▸ Actuation type: Push-button ▸ Push-in CAGE CLAMP® ▸ Color: light gray

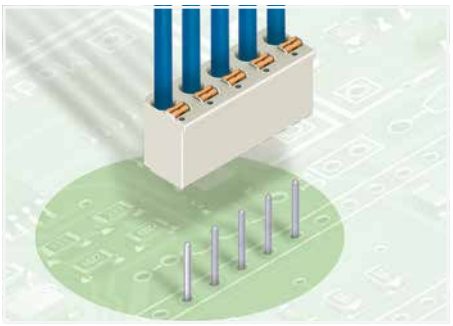

- Universal connection for all conductor types
- Simple, push-in termination of solid and ferruled conductors
- Easy-to-use design does not require special tools
- Ability to wire while mated or unmated
- Integrated test ports for testing parallel to conductor entry
- Custom-installed solder pins

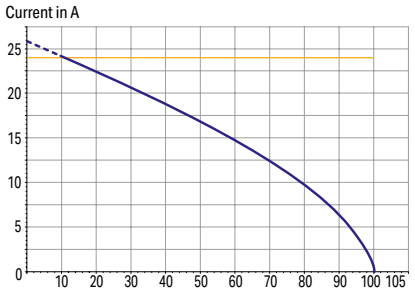

Electrical data			
Ratings per	**IEC/EN 60664-1**		
Overvoltage category	III	III	II
Pollution degree	3	2	2
Nominal voltage	400 V	630 V	1000 V
Rated impulse withstand voltage	6 kV	6 kV	6 kV
Rated current	16 A	16 A	16 A
Approvals per	**UL 1059**		
Use group	B	C	D
Rated voltage	300 V	-	300 V
Rated current	15 A	-	10 A

Connection Data	
Connection technology	Push-in CAGE CLAMP®
Strip length	9 … 10 mm / 0.35 … 0.39 inches
Solid conductor	0.2 … 2.5 mm² / 24 … 12 AWG
Fine-stranded conductor	0.2 … 2.5 mm² / 24 … 12 AWG
Fine-stranded conductor; with insulated ferrule	0.25 … 1.5 mm²
Fine-stranded conductor; with uninsulated ferrule	0.25 … 2.5 mm²

Material data	
Material group	I
Insulation material (main housing)	Polyphthalamide (PPA GF)
Flammability class per UL94	V0
Clamping spring material	Chrome-nickel spring steel (CrNi)
Contact material	Electrolytic copper (E_{Cu})
Contact Plating	Tin

Mechanical data	
Solder pin length	3.6 mm
Solder pin diameter	1.4 mm
Drilled hole diameter	1.6 $^{(+0.1)}$ mm

Environmental requirements	
Limit temperature range	-60 … +100 °C
Processing temperature	-35 … +60 °C

Note:
The **picoMAX® Pluggable Connection System** includes connectors without breaking capacity in accordance with DIN EN 61984. When used as intended, these connectors must not be connected/disconnected when live or under load.When used as intended, these connectors must not be connected/disconnected when live or under load. The circuit design should ensure header pins, which can be touched, are not live when unmated.
The use of ferrules is recommended for applications with higher requirements.

To prevent excessive force on the clamping point, effective cable strain relief must be used.

Ferrule	Page 1081
Test and measurement	Page 1088
Tool	Page 1072

See technical section for further information

Approvals and corresponding ratings, visit www.wago.com

1-conductor THT female connector angled ▸ *picoMAX® eCOM* 7.5 ▸ 2092 Series

Pin spacing: 7.5 mm / 0.295 inches ▸ Actuation type: Push-button ▸ Push-in CAGE CLAMP® ▸ Color: light gray

Mating direction to the PCB: 0 °



2092-3375

Pole number	Item No.	PU
2	**2092-3372**	100
3	**2092-3373**	100
4	**2092-3374**	100
5	**2092-3375**	100

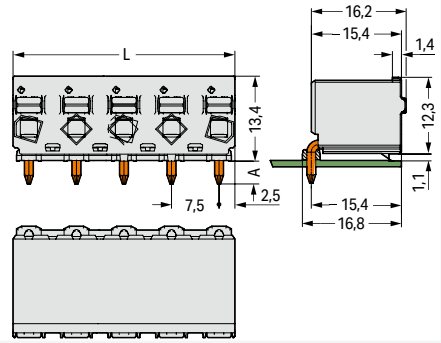

L = (pole no. – 1) x pin spacing + 5 mm
A = 3.6 mm THT solder pin
A = 2.4 mm THR solder pin

Mating direction to the PCB: 90 °

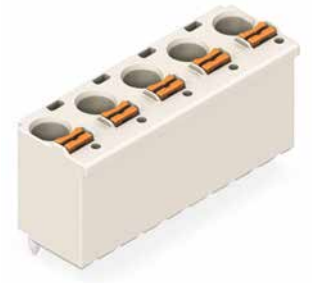

2092-3175

Pole number	Item No.	PU
2	**2092-3172**	100
3	**2092-3173**	100
4	**2092-3174**	100
5	**2092-3175**	100

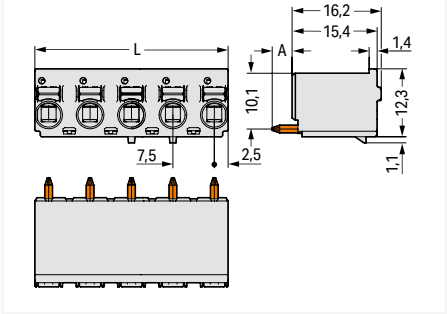

L = (pole no. – 1) x pin spacing + 5 mm
A = 3.6 mm THT solder pin
A = 2.4 mm THR solder pin

PU = packaging unit; SPU = subpackaging unit; Dimensions in mm

1-conductor THT female connector angled ▸ *picoMAX® eCOM* 7.5 ▸ 2092 Series

Pin spacing: 7.5 mm / 0.295 inches ▸ Actuation type: Push-button ▸ Push-in CAGE CLAMP® ▸ with gripping plate ▸ Color: light gray

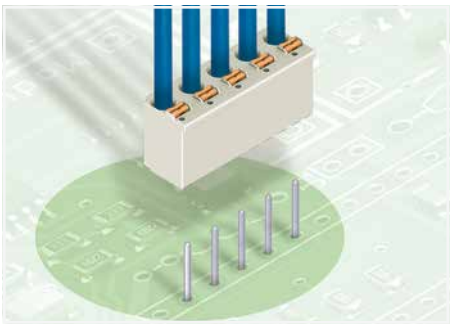

- Universal connection for all conductor types
- Simple, push-in termination of solid and ferruled conductors
- Easy-to-use design does not require special tools
- Ability to wire while mated or unmated
- Integrated test ports for testing parallel to conductor entry
- Custom-installed solder pins

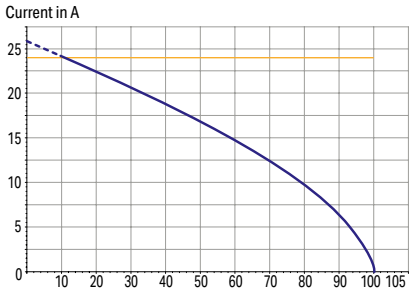

Electrical data			
Ratings per	**IEC/EN 60664-1**		
Overvoltage category	III	III	II
Pollution degree	3	2	2
Nominal voltage	400 V	630 V	1000 V
Rated impulse withstand voltage	6 kV	6 kV	6 kV
Rated current	16 A	16 A	16 A
Approvals per	**UL 1059**		
Use group	B	C	D
Rated voltage	300 V	-	300 V
Rated current	15 A	-	10 A

Connection Data	
Connection technology	Push-in CAGE CLAMP®
Strip length	9 … 10 mm / 0.35 … 0.39 inches
Solid conductor	0.2 … 2.5 mm² / 24 … 12 AWG
Fine-stranded conductor	0.2 … 2.5 mm² / 24 … 12 AWG
Fine-stranded conductor; with insulated ferrule	0.25 … 1.5 mm²
Fine-stranded conductor; with uninsulated ferrule	0.25 … 2.5 mm²

Material data	
Material group	I
Insulation material (main housing)	Polyphthalamide (PPA GF)
Flammability class per UL94	V0
Clamping spring material	Chrome-nickel spring steel (CrNi)
Contact material	Electrolytic copper (E_{Cu})
Contact Plating	Tin

Mechanical data	
Solder pin length	3.6 mm
Solder pin diameter	1.4 mm
Drilled hole diameter	1.6 $^{(+0.1)}$ mm
Design	with gripping plate

Environmental requirements	
Limit temperature range	-60 … +100 °C
Processing temperature	-35 … +60 °C

Note:
The **picoMAX® Pluggable Connection System** includes connectors without breaking capacity in accordance with DIN EN 61984. When used as intended, these connectors must not be connected/disconnected when live or under load.When used as intended, these connectors must not be connected/disconnected when live or under load. The circuit design should ensure header pins, which can be touched, are not live when unmated.
The use of ferrules is recommended for applications with higher requirements.

To prevent excessive force on the clamping point, effective cable strain relief must be used.

Ferrule	Page 1081
Test and measurement	Page 1088
Tool	Page 1072

See technical section for further information

Approvals and corresponding ratings, visit www.wago.com

1-conductor THT female connector angled ▸ *picoMAX® eCOM* 7.5 ▸ 2092 Series

Pin spacing: 7.5 mm / 0.295 inches ▸ Actuation type: Push-button ▸ Push-in CAGE CLAMP® ▸ with gripping plate ▸ Color: light gray

Mating direction to the PCB: 0 °



2092-3355

Pole number	Item No.	PU
2	**2092-3352**	100
3	**2092-3353**	100
4	**2092-3354**	100
5	**2092-3355**	100

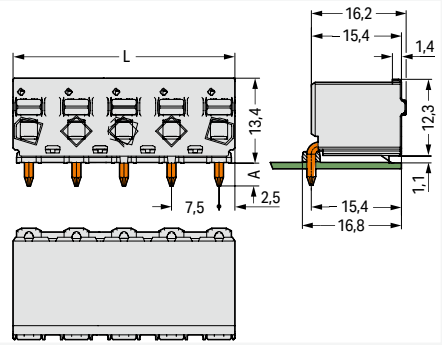

L = (pole no. – 1) x pin spacing + 5 mm
A = 3.6 mm THT solder pin
A = 2.4 mm THR solder pin

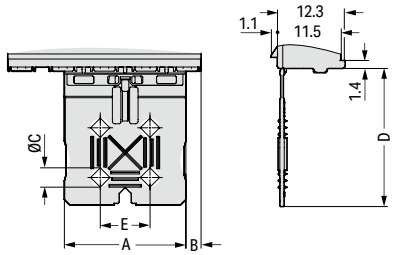

Pole No.	A	B	C	D	E
2	7	2.75	–	20	–
3	12	4	–	20	–
4	22	2.75	3.5	25	9
5	22	2.75	3.5	25	9

Mating direction to the PCB: 90 °



2092-3155

Pole number	Item No.	PU
2	**2092-3152**	100
3	**2092-3153**	100
4	**2092-3154**	100
5	**2092-3155**	100

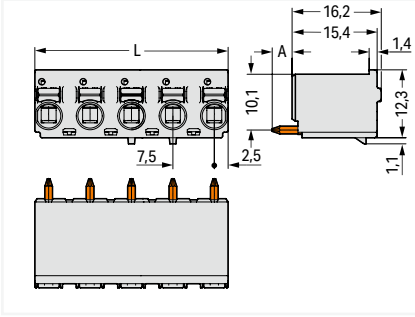

L = (pole no. – 1) x pin spacing + 5 mm
A = 3.6 mm THT solder pin
A = 2.4 mm THR solder pin

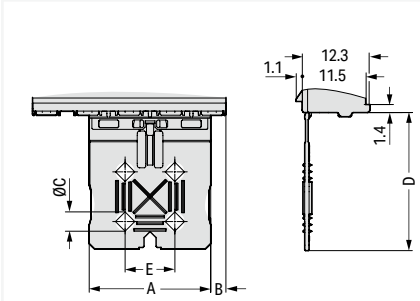

Pole No.	A	B	C	D	E
2	7	2.75	–	20	–
3	12	4	–	20	–
4	22	2.75	3.5	25	9
5	22	2.75	3.5	25	9

PU = packaging unit; SPU = subpackaging unit; Dimensions in mm

1-conductor THR female connector angled ▸ *picoMAX® eCOM* 7.5 ▸ 2092 Series

Pin spacing: 7.5 mm / 0.295 inches ▸ Actuation type: Push-button ▸ Push-in CAGE CLAMP® ▸ Color: light gray

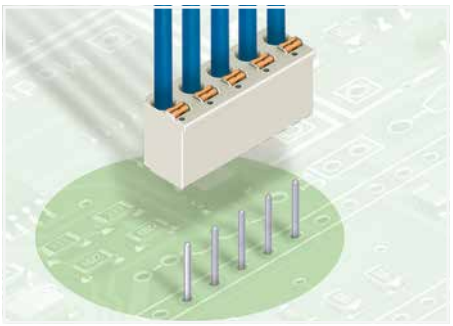

- Universal connection for all conductor types
- Simple, push-in termination of solid and ferruled conductors
- Easy-to-use design does not require specialty tools
- Ability to wire while mated or unmated
- Integrated test ports for testing parallel to conductor entry
- Factory-installed, straight or angled solder pins allow horizontal or vertical mounting to the PCB

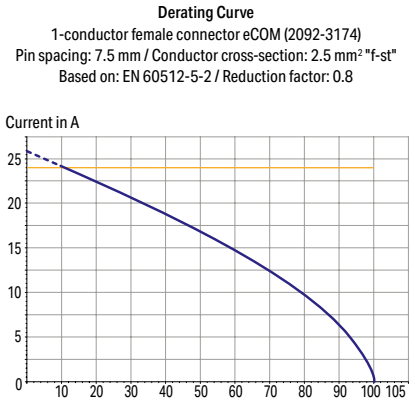

Electrical data			
Ratings per	**IEC/EN 60664-1**		
Overvoltage category	III	III	II
Pollution degree	3	2	2
Nominal voltage	400 V	320 V	630 V
Rated impulse withstand voltage	6 kV	4 kV	4 kV
Rated current	16 A	16 A	16 A
Approvals per	**UL 1059**		
Use group	B	C	D
Rated voltage	300 V	-	300 V
Rated current	15 A	-	10 A

Connection Data	
Connection technology	Push-in CAGE CLAMP®
Strip length	9 … 10 mm / 0.35 … 0.39 inches
Solid conductor	0.2 … 2.5 mm² / 24 … 12 AWG
Fine-stranded conductor	0.5 … 2.5 mm² / 20 … 12 AWG
Fine-stranded conductor; with insulated ferrule	0.25 … 1.5 mm²
Fine-stranded conductor; with uninsulated ferrule	0.25 … 2.5 mm²

Material data	
Material group	I
Insulation material (main housing)	Polyphthalamide (PPA GF)
Flammability class per UL94	V0
Clamping spring material	Chrome-nickel spring steel (CrNi)
Contact material	Electrolytic copper (E_{Cu})
Contact Plating	Silver

Mechanical data	
Solder pin length	2.4 mm
Solder pin diameter	1.4 mm
Plated through-hole diameter (THR)	1.6 $^{(+0.1)}$ mm

Environmental requirements	
Limit temperature range	-60 … +100 °C
Processing temperature	-35 … +60 °C

Note:
The **picoMAX® Pluggable Connection System** includes connectors without breaking capacity in accordance with DIN EN 61984. When used as intended, these connectors must not be connected/disconnected when live or under load.When used as intended, these connectors must not be connected/ disconnected when live or under load. The circuit design should ensure header pins, which can be touched, are not live when unmated.
The use of ferrules is recommended for applications with higher requirements.

To prevent excessive force on the clamping point, effective cable strain relief must be used.

Ferrule	Page 1081
Test and measurement	Page 1088
Tool	Page 1072
THR soldering	Page 990
See technical section for further information	
Approvals and corresponding ratings, visit www.wago.com	

1-conductor THR female connector angled ▸ *picoMAX® eCOM* 7.5 ▸ 2092 Series

Pin spacing: 7.5 mm / 0.295 inches ▸ Actuation type: Push-button ▸ Push-in CAGE CLAMP® ▸ Color: light gray

Mating direction to the PCB: 0 °



2092-4375/200-000

Pole number	Item No.	PU
2	**2092-4372/200-000**	100
3	**2092-4373/200-000**	100
4	**2092-4374/200-000**	100
5	**2092-4375/200-000**	100

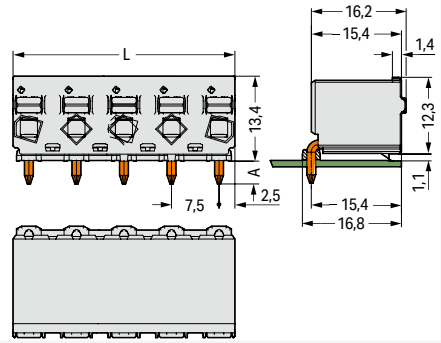

L = (pole no. – 1) x pin spacing + 5 mm
A = 3.6 mm THT solder pin
A = 2.4 mm THR solder pin

Mating direction to the PCB: 90 °

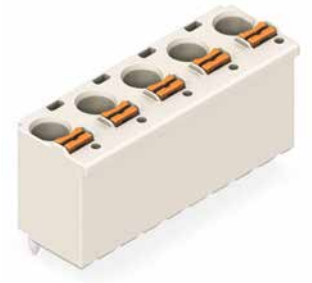

2092-4175/200-000

Pole number	Item No.	PU
2	**2092-4172/200-000**	100
3	**2092-4173/200-000**	100
4	**2092-4174/200-000**	100
5	**2092-4175/200-000**	100

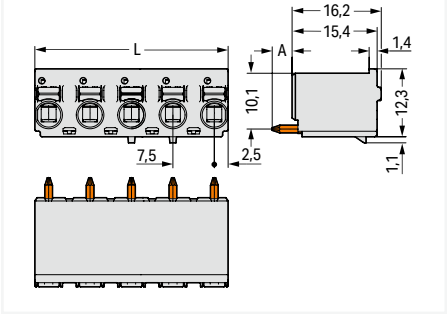

L = (pole no. – 1) x pin spacing + 5 mm
A = 3.6 mm THT solder pin
A = 2.4 mm THR solder pin

12

PU = packaging unit; SPU = subpackaging unit; Dimensions in mm

Variants:
- Tape-and-reel packaging

THR (Through-Hole Reflow) Soldering Process

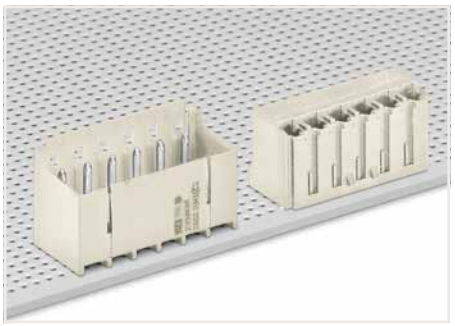

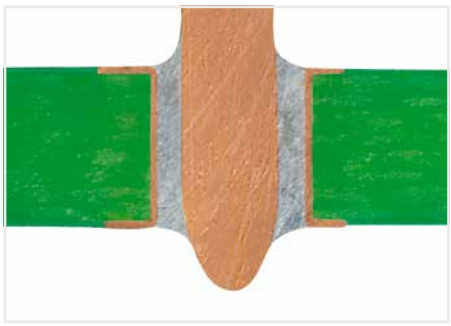

By using high-temperature-resistant plastic and a streamlined pin design, WAGO's THR male headers and PCB terminal blocks meet requirements for SMT process capability while maintaining the necessary stability. Both headers and terminal blocks are simply pushed into the solder paste-filled PCB holes and then soldered along with the SMT components via reflow soldering. The previous wave soldering process is no longer necessary. The result is a perfect connection – both mechanically and electrically.



Terminal strips with an additional suction pad in tape-and-reel packaging per IEC 60286-3
WAGO recommends both a temperature profile that adheres to EN 61760-1 and the use of forced convection ovens for processing THR components.

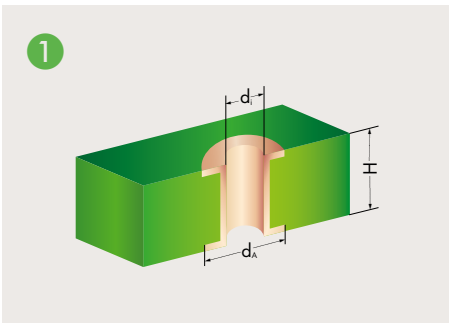

Metal-plated PCB bore hole

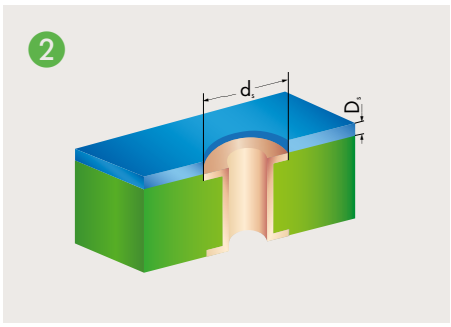

SMD positioning pattern

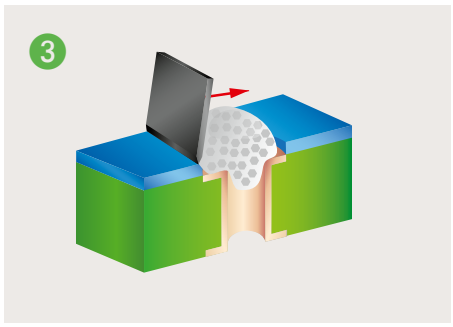

Solder paste application

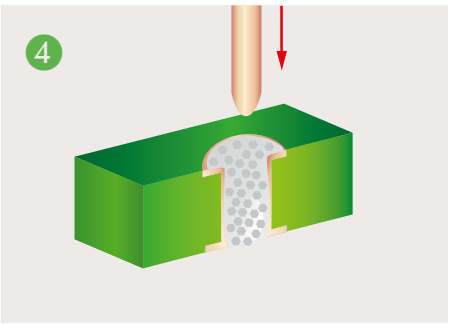

Component assembly, automatic/by hand

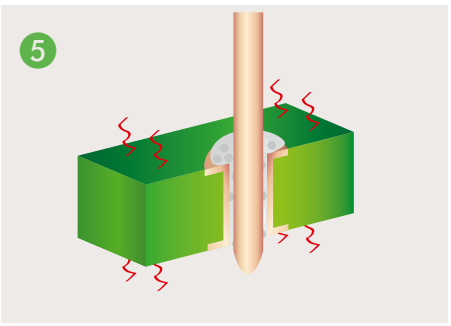

Reflow soldering process

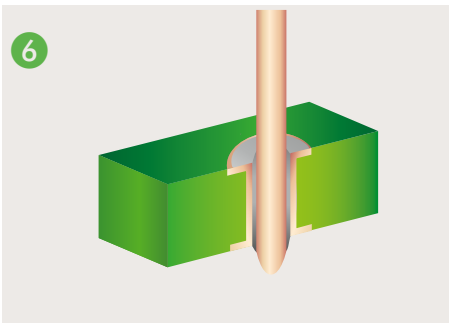

THR soldering joint

12

Series	d_i (mm)	d_A (mm)	H (mm)	d_s (mm)	D_s (µm)	d (mm)	L (mm)
2091	$1.2^{+0.1}$	1.9	< 2	1.8	150	1.0 ○	2.4
2091	$1.2^{+0.1}$	1.9	< 2	1.8	150	0.4 x 0.9 ▭	2.4
2092	$1.6^{+0.1}$	2.3	< 2	2.2	150	1.4 ○	2.4
2092	$1.5^{+0.1}$	2.2	< 2	2.1	150	0.4 x 1.3 ▭	2.4

d_i: Plated through-hole diameter
d_A: Outer diameter of metal-plated PCB hole*
H: PCB thickness
d_s: Pattern hole diameter
D_s: Pattern thickness
d: Pin diagonal
L: Pin length

* When laying out the metal-plated bore holes, the clearance and creepage distance requirements – as specified in the equipment standards – must be considered.

Solder pin form

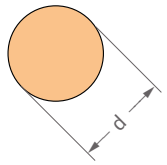

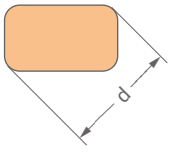

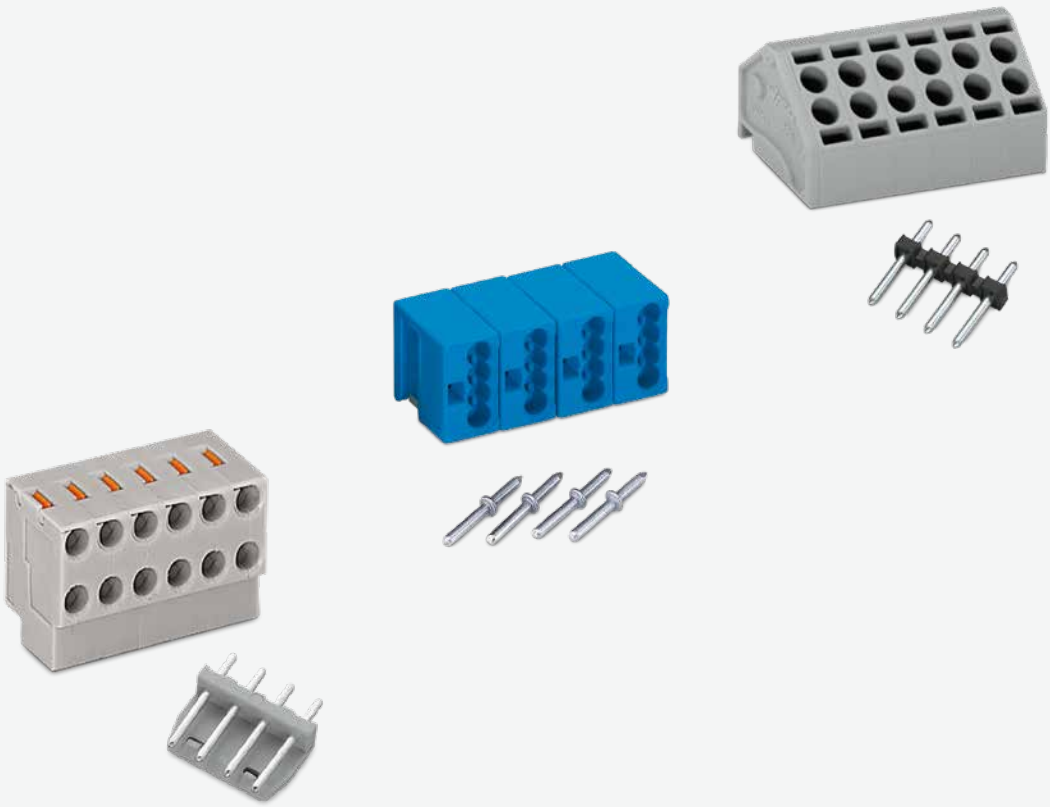

WAGO Pluggable PCB Connectors

Pluggable WAGO PCB Connectors

		Nominal Cross-Section	Series	Page
	2-Conductor Compact PCB Connectors ▸ 0.4 … 0.8 mm Ø "sol." ▸ PUSH WIRE®	3,5 mm	252	996
	2-Conductor PCB Connector Strips (Pinstrip Pluggable) ▸ 0.2 … 1.5 mm² (16 AWG) ▸ Push-in CAGE CLAMP®	5 mm	806	1000
	4-Conductor Modular PCB Connectors ▸ 0.4 … 0.8 mm Ø "sol." ▸ PUSH WIRE®	5,75 mm	243	1002
	Accessories and Tools			1063

13

PUSH WIRE®

Pluggable PCB Connectors 252 and 243 Series
Description and Installation

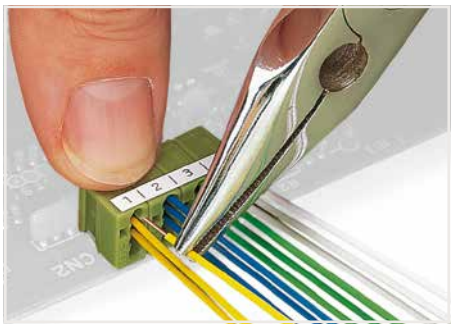
Inserting a conductor using pliers until it hits backstop – directly on the PCB or wiring prior to mounting on PCB.

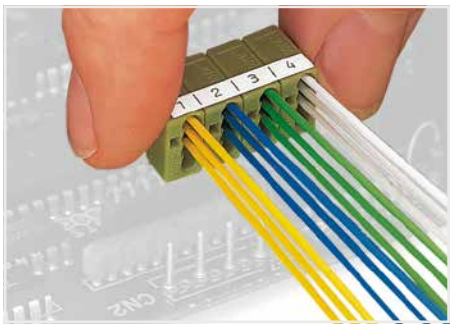
Removing a PCB connector strip to replace the board.

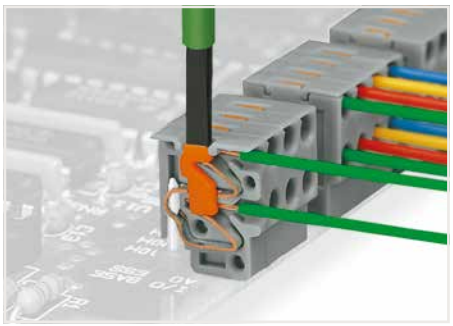
Removing a conductor via push-button – 252 Series

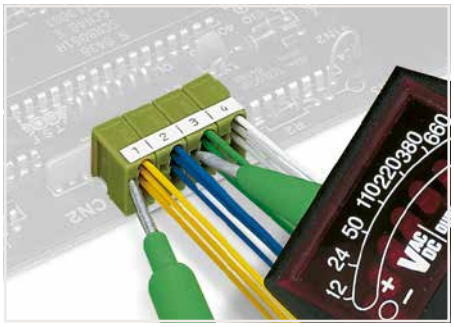

Testing – 243 Series

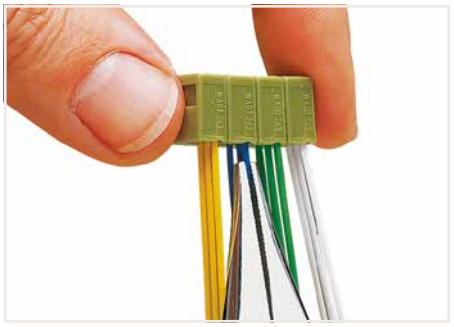
Removing a conductor using pliers – twisting alternately left and right – 243 Series

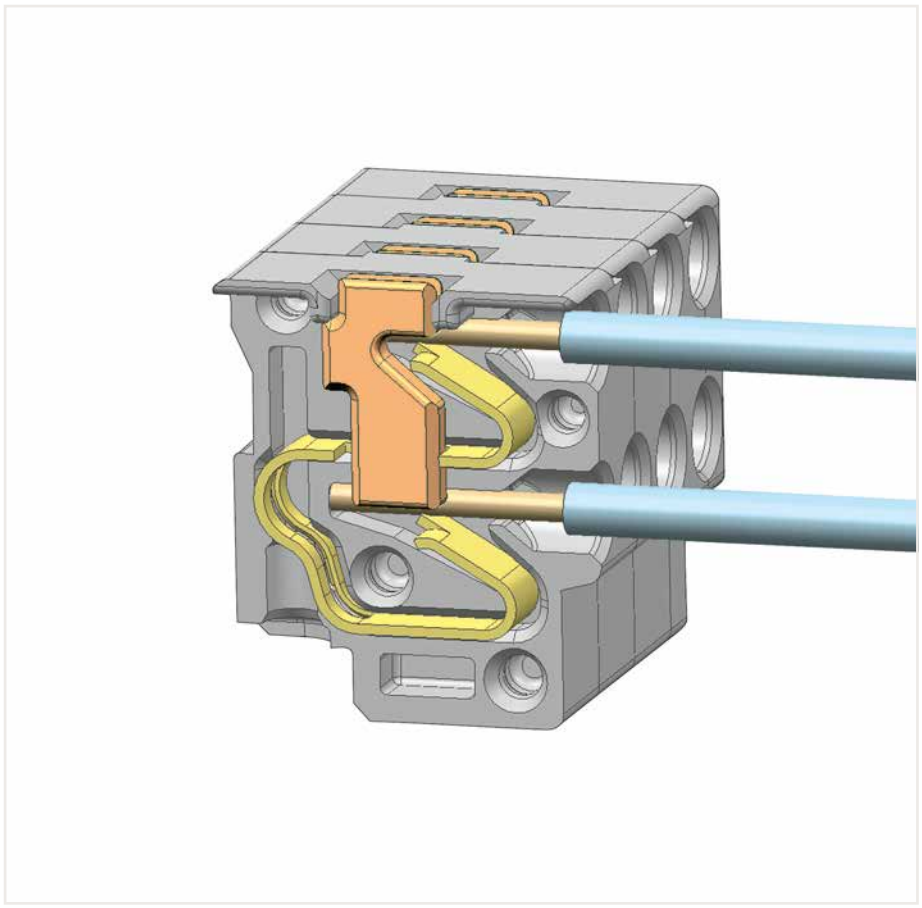
252 Series

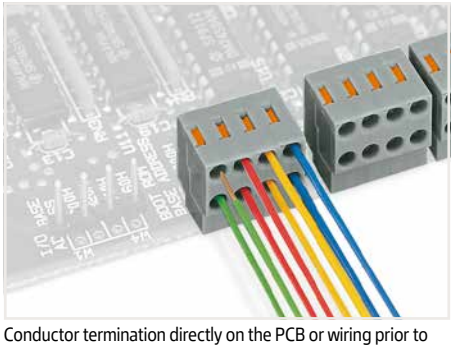
Conductor termination directly on the PCB or wiring prior to mounting on PCB – 252 Series



Solder pin strip with strain relief, 4-pole

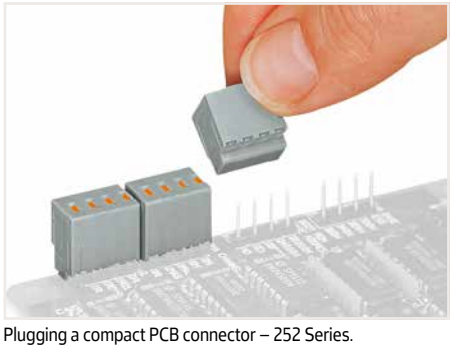
Plugging a compact PCB connector – 252 Series.

PUSH-IN CAGE CLAMP®

Pluggable PCB Connectors
806 Series
Description and Installation



Inserting solid conductors via push-in termination. Inserting/removing fine-stranded conductors: Open the clamping unit using a screwdriver and insert a stripped conductor until it hits backstop.

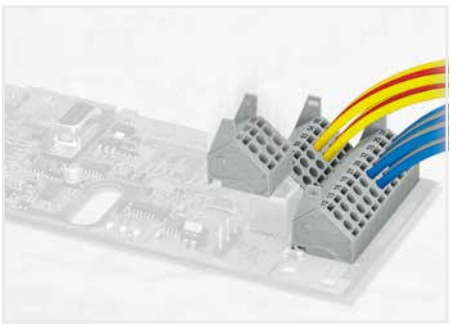

Conductor termination directly on the PCB or wiring prior to mounting on PCB



Mixed-color PCB connector strips (with or without spacer) are available upon request.

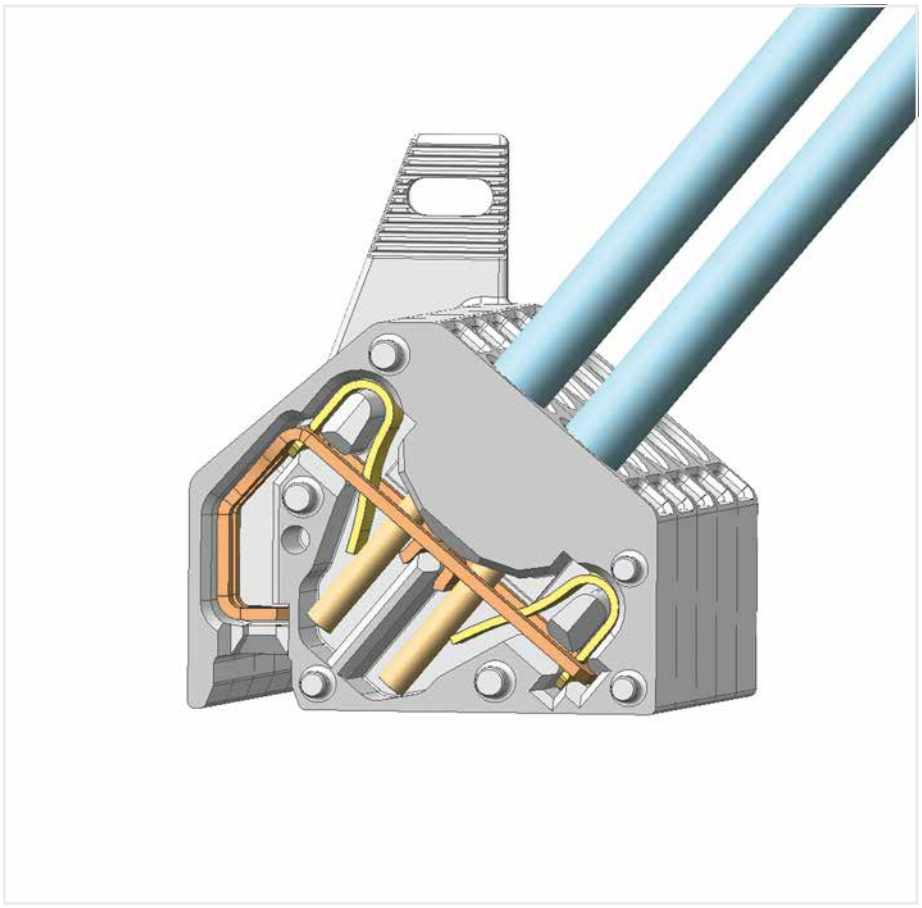

806 Series

13

2-conductor female connector ▸ 252 Series

PUSH WIRE® ▸ Actuation type: Push-button ▸ 0.5 mm² ▸ Pin spacing: 3.5 mm / 0.138 inches ▸ Terminal strip ▸ Color: gray

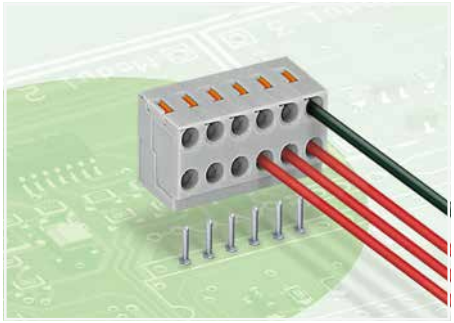

- 2-conductor female connector with PUSH WIRE® connection and push-buttons
- Push-in termination of solid conductors – conductor removal via push-buttons
- Double entries for power supply and distribution
- Quick and easy PCB replacement
- Loop connection is retained, even when unmated
- Group arrangement is possible without losing any poles

Electrical data						
Pin spacing	**3.5 mm / 0.138 inches**			**3.5 mm / 0.138 inches**		
Ratings per	**IEC/EN 60664-1**			**IEC/EN 60664-1**		
Overvoltage category	III	III	II	III	III	II
Pollution degree	3	2	2	3	2	2
Nominal voltage	320 V	320 V	630 V	160 V	160 V	320 V
Rated impulse withstand voltage	4 kV	4 kV	4 kV	2.5 kV	2.5 kV	2.5 kV
Rated current	2 A	2 A	2 A	2 A	2 A	2 A
Approvals per	**UL 1059**			**UL 1059**		
Use group	B	C	D	B	C	D
Rated voltage	300 V	-	300 V	300 V	-	300 V
Rated current	2 A	-	2 A	2 A	-	2 A

Connection Data	
Connection technology	PUSH WIRE®
Strip length	6 … 7 mm / 0.24 … 0.28 inches
Conductor connection direction to PCB	0 °
Solid conductor	0.14 … 0.5 mm² / 26 … 20 AWG
Conductor diameter	0.4 … 0.8 mm / 26 … 20 AWG

Material data	
Material group	I
Insulation material (main housing)	Polyamide (PA66)
Flammability class per UL94	V0
Clamping spring material	Copper alloy
Contact material	Electrolytic copper (E_{Cu})
Contact Plating	Tin

Environmental requirements	
Limit temperature range	-60 … +105 °C

13

Male connector	Page 997
Marking	Page 1066
Tool	Page 1072
See technical section for further information	
Approvals and corresponding ratings, visit www.wago.com	

2-conductor female connector ▸ 252 Series

PUSH WIRE® ▸ Actuation type: Push-button ▸ 0.5 mm² ▸ Pin spacing: 3.5 mm / 0.138 inches ▸ Terminal strip ▸ Color: gray

suitable for solder pins



252-106

Pole number	Item No.	PU (SPU)
2	**252-102**	600 (100)
3	**252-103**	400 (100)
4	**252-104**	300 (100)
5	**252-105**	300 (100)
6	**252-106**	200 (100)
7	**252-107**	200 (100)
8	**252-108**	200 (50)
9	**252-109**	200 (50)
10	**252-110**	150 (50)

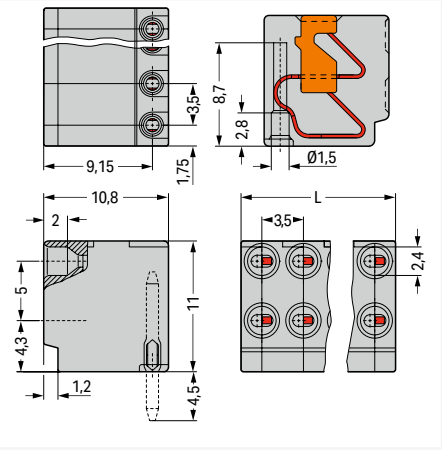

L = pole no. x pin spacing

suitable for solder pins; pluggable from top



252-306

Pole number	Item No.	PU (SPU)
2	**252-302**	600 (100)
3	**252-303**	400 (100)
4	**252-304**	300 (100)
5	**252-305**	300 (100)
6	**252-306**	200 (100)
7	**252-307**	200 (100)
8	**252-308**	200 (50)
9	**252-309**	200 (50)
10	**252-310**	150 (50)

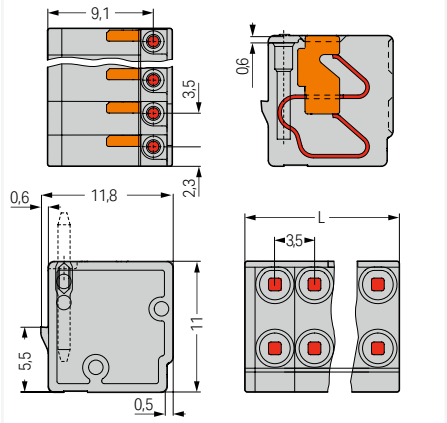

L = pole no. x pin spacing

Accessories; for all products on this page



Solder pin; Solder pin diameter: 1 mm; for PCBs up to 2 mm thick

Pole number	Item No.	PU
1	**243-131**	1000

PU = packaging unit; SPU = subpackaging unit; Dimensions in mm

Variants:

- Other pole numbers
- Direct marking
- Other versions (or variants) can be requested from WAGO Sales or configured at https://configurator.wago.com/.

13

2-conductor female connector ▸ 252 Series

PUSH WIRE® ▸ Actuation type: Push-button ▸ 0.5 mm² ▸ Pin spacing: 3.5 mm / 0.138 inches ▸ Terminal strip ▸ Color: gray

for solder pin strips



252-156

Pole number	Item No.	PU (SPU)
2	**252-152**	600 (100)
3	**252-153**	400 (100)
4	**252-154**	300 (100)
5	**252-155**	300 (100)
6	**252-156**	200 (100)
7	**252-157**	200 (100)
8	**252-158**	200 (50)
9	**252-159**	200 (50)
10	**252-160**	150 (50)

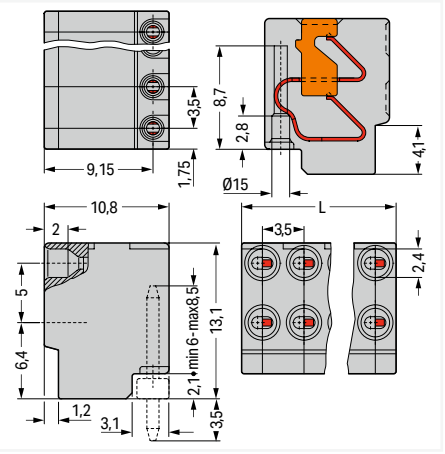

L = pole no. x pin spacing

13

Accessories; for all products on this page



Solder pin; Solder pin diameter: 1 mm; Pin spacing: 3.5 mm / 0.138 inch

Pole number	Item No.	PU
2	**252-902**	500
3	**252-903**	500
4	**252-904**	500
5	**252-905**	500
6	**252-906**	500
7	**252-907**	500
8	**252-908**	500
9	**252-909**	500
10	**252-910**	500



Solder pin; Solder pin diameter: 1 mm; with locking function

Pole number	Item No.	PU
4	**252-954**	1000

PU = packaging unit; SPU = subpackaging unit; Dimensions in mm

Variants:

- Other pole numbers
- Direct marking
- Other versions (or variants) can be requested from WAGO Sales or configured at https://configurator.wago.com/.

2-conductor female connector ▸ 806 Series

Push-in CAGE CLAMP® ▸ Actuation type: Operating tool ▸ 1.5 mm² ▸ Pin spacing: 5 mm / 0.197 inches ▸ Terminal strip ▸ Color: gray

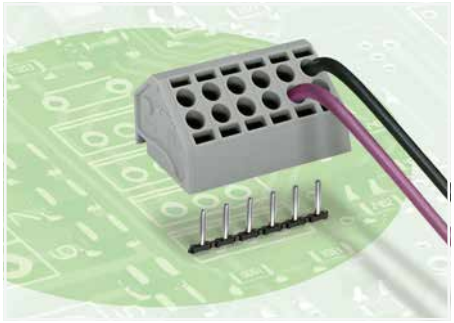

- 2-conductor female connector with Push-in CAGE CLAMP® and screwdriver actuation
- Push-in termination of solid and ferruled conductors
- Double entries for power supply and potential distribution
- Quick and easy PCB replacement, without disrupting looped-through potentials

Electrical data			
Pin spacing	**5 mm / 0.197 inches**		
Ratings per	**IEC/EN 60664-1**		
Overvoltage category	III	III	II
Pollution degree	3	2	2
Nominal voltage	250 V	320 V	630 V
Rated impulse withstand voltage	4 kV	4 kV	4 kV
Rated current	10 A	10 A	10 A
Approvals per	**UL 1059**		
Use group	B	C	D
Rated voltage	300 V	-	300 V
Rated current	10 A	-	10 A
Approvals per	**CSA**		
Use group	B	C	D
Rated voltage	300 V	-	-
Rated current	10 A	-	-

Connection Data	
Connection technology	Push-in CAGE CLAMP®
Strip length	9 … 10 mm / 0.35 … 0.39 inches
Conductor connection direction to PCB	45 °
Solid conductor	0.2 … 1.5 mm² / 24 … 16 AWG
Fine-stranded conductor	0.2 … 1.5 mm² / 24 … 16 AWG
Fine-stranded conductor; with insulated ferrule	0.25 … 1 mm²
Fine-stranded conductor; with uninsulated ferrule	0.25 … 1 mm²

Material data	
Material group	I
Insulation material (main housing)	Polyamide (PA66)
Flammability class per UL94	V0
Clamping spring material	Chrome-nickel spring steel (CrNi)
Contact material	Copper alloy
Contact Plating	Tin

Mechanical data	
Solder pin diameter	1 mm

Environmental requirements	
Limit temperature range	-60 … +105 °C

Marking Page 1067
Tool Page 1072

See technical section for further information

Approvals and corresponding ratings, visit www.wago.com

2-conductor female connector ▸ 806 Series

Push-in CAGE CLAMP® ▸ Actuation type: Operating tool ▸ 1.5 mm² ▸ Pin spacing: 5 mm / 0.197 inches ▸ Terminal strip ▸ Color: gray



806-106

Pole number	Item No.	PU
2	806-102	400
3	806-103	250
4	806-104	200
5	806-105	175
6	806-106	150
7	806-107	125
8	806-108	100
9	806-109	100
10	806-110	80
11	806-111	80
12	806-112	60

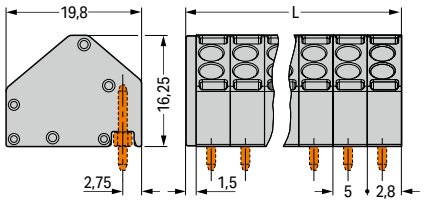

L = (pole no. x pin spacing) + 1.5 mm

with pull-out tool



806-206

Pole number	Item No.	PU
2	806-202	704
3	806-203	484
4	806-204	352
5	806-205	308
6	806-206	220
7	806-207	220
8	806-208	176
9	806-209	132
10	806-210	132
11	806-211	132
12	806-212	132

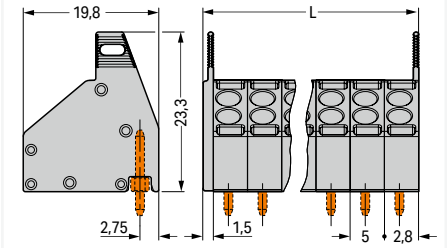

L = (pole no. x pin spacing) + 1.5 mm

Accessories; for all products on this page



Solder pin; Solder pin diameter: 1 mm; Pin spacing: 5 mm / 0.197 inch

Pole number	Item No.	PU
2	806-902	100
3	806-903	100
4	806-904	100
5	806-905	100
6	806-906	100
7	806-907	100
8	806-908	100
9	806-909	100
10	806-910	100
11	806-911	100
12	806-912	100

PU = packaging unit; SPU = subpackaging unit; Dimensions in mm

Variants:

- Other pole numbers
- Other colors
- Mixed-color PCB connector strips
- Direct marking
- Other versions (or variants) can be requested from WAGO Sales or configured at https://configurator.wago.com/.

4-conductor female plug ▸ 243 Series

PUSH WIRE® ▸ 1 mm² ▸ Pin spacing: 5.75 mm / 0.226 inches

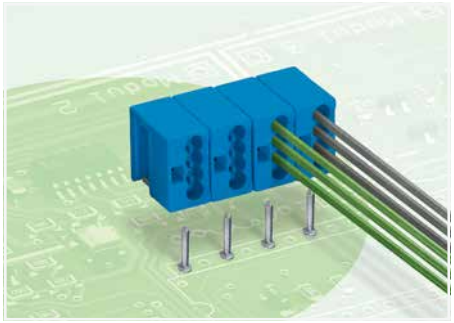

- 4-conductor female connector with PUSH WIRE® connection
- Can be assembled to connector strips via dovetail joints
- Push-in termination of solid conductors
- Four entries for power supply and potential distribution
- Quick and easy PCB replacement, without disrupting looped-through potentials

Electrical data			
Pin spacing	**5.75 mm / 0.226 inches**		
Ratings per	**IEC/EN 60664-1**		
Overvoltage category	III	III	II
Pollution degree	3	2	2
Nominal voltage	250 V	320 V	630 V
Rated impulse withstand voltage	4 kV	4 kV	4 kV
Rated current	6 A	6 A	6 A
Approvals per	**UL 1059**		
Use group	B	C	D
Rated voltage	150 V	-	150 V
Rated current	7 A	-	7 A
Approvals per	**CSA**		
Use group	B	C	D
Rated voltage	150 V	-	150 V
Rated current	7 A	-	7 A

Connection Data	
Connection technology	PUSH WIRE®
Strip length	5 … 6 mm / 0.2 … 0.24 inches
Conductor connection direction to PCB	0 °
Connectable conductor materials	Copper
Solid conductor	0.5 … 1 mm² / 24 … 18 AWG
Conductor diameter	0.5 … 1 mm / 24 … 18 AWG

Material data	
Material group	I
Insulation material (main housing)	Polyamide (PA66)
Flammability class per UL94	V0
Clamping spring material	Copper alloy
Contact material	Electrolytic copper (E_{Cu})
Contact Plating	Tin

Mechanical data	
Solder pin length	4.5 mm
Solder pin diameter	1 mm
Drilled hole diameter	$1.2^{(-0.05 \ldots +0.05)}$ mm

Environmental requirements	
Limit temperature range	-60 … +105 °C
Continuous operating temperature	-60 °C

Marking Page 1067

See technical section for further information

Approvals and corresponding ratings, visit www.wago.com

4-conductor female plug ▸ 243 Series

PUSH WIRE® ▸ 1 mm² ▸ Pin spacing: 5.75 mm / 0.226 inches

Modular terminal block



243-724

Color	Item No.	PU
gray	243-721	400
blue	243-722	400
orange	243-723	400
light gray	243-726	400
light green	243-724	400
dark gray	243-725	400

Terminal strip



243-743

Color	Pole number	Item No.	PU (SPU)
gray	4	243-744/000-007	50
blue	2	243-742/000-006	50
blue	4	243-744/000-006	50
blue	5	243-745/000-006	400 (50)
blue	6	243-746/000-006	50
orange	2	243-742/000-012	50
orange	3	243-743/000-012	50
orange	4	243-744/000-012	50
orange	5	243-745/000-012	400 (50)
light green	2	243-742	50
light green	3	243-743	50
light green	4	243-744	50
light green	5	243-745	50
light green	6	243-746	50
light green	7	243-747	50
light green	8	243-748	50

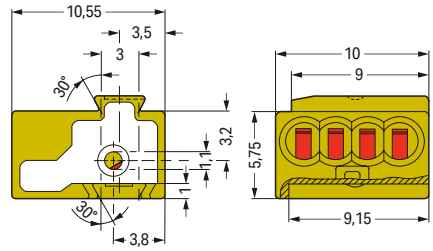

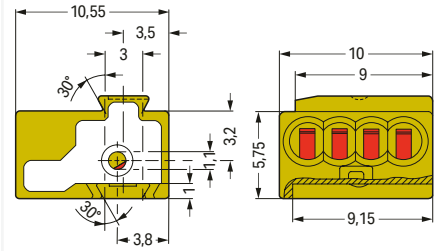

Accessories; for all products on this page



Solder pin; Solder pin diameter: 1 mm; for PCBs up to 2 mm thick

Pole number	Item No.	PU
1	243-131	1000

PU = packaging unit; SPU = subpackaging unit; Dimensions in mm

Variants:

- Other pole numbers
- Other colors
- Mixed-color PCB connector strips
- Direct marking
- Other versions (or variants) can be requested from WAGO Sales or configured at https://configurator.wago.com/.

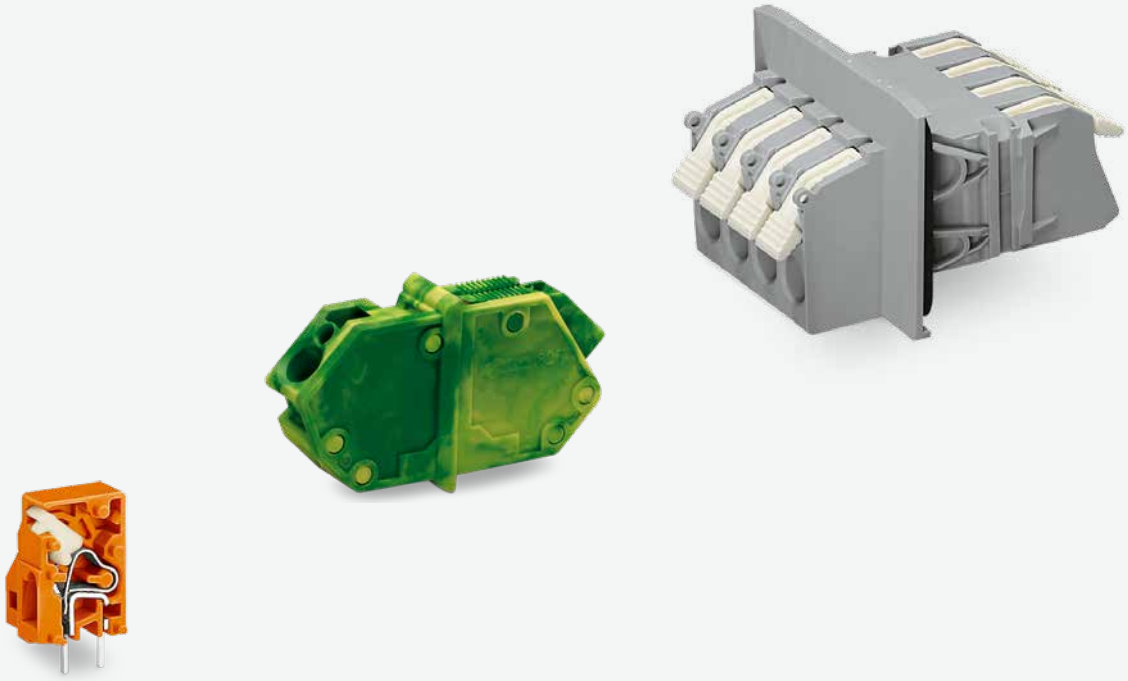

WAGO Feedthrough Terminal Blocks

WAGO Feedthrough Terminal Blocks

		Nominal cross-section	Series	Page
	Modular, Panel Feedthrough end Terminal Blocks ▸ Actuation type: Operating tool ▸ CAGE CLAMP®	4 mm²	826	1008
	Feedthrough Terminal Blocks ▸ Actuation type: Operating tool ▸ CAGE CLAMP®	4 mm²	226	1012
	Feedthrough Terminal Blocks ▸ Actuation type: Lever ▸ CAGE CLAMP®	16 mm²	828	1018
	PCB Terminal Blocks ▸ Actuation type: Push-button ▸ CAGE CLAMP®	2.5 mm²	741	1020
	PCB Terminal Blocks ▸ Actuation type: Operating tool ▸ CAGE CLAMP®	2.5 mm²	231	1028
	1-Conductor Feedthrough Terminal Strips ▸ Actuation type: Operating tool ▸ CAGE CLAMP®	2.5 mm²	731	1032
	Accessories and Tools			1063

14

CAGE CLAMP®

Feedthrough Terminal Blocks
826 Series
Description and Installation

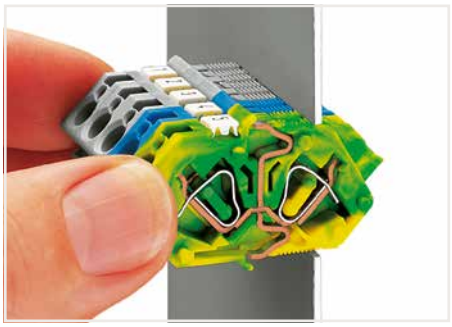

Insert the terminal strip into the cutout until the stop hits the enclosure wall.



Secure the terminal strip to the inner side of the cutout via retaining clips.

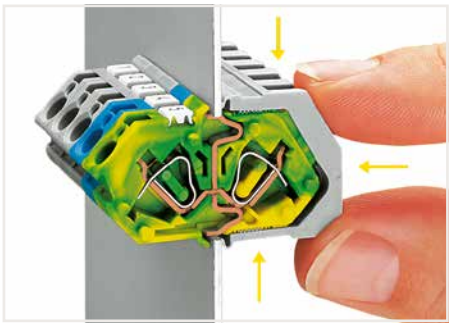

Push retaining clips until stop and press together in the direction of the terminal strip center.

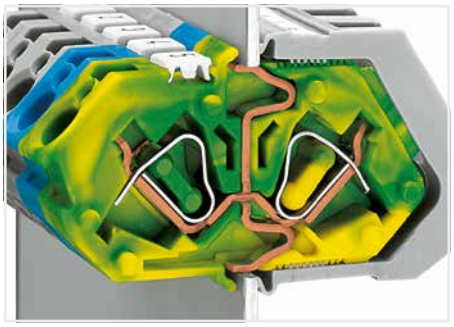

Automatic, double contact of the ground contact to the enclosure wall



Inserting a conductor via screwdriver.

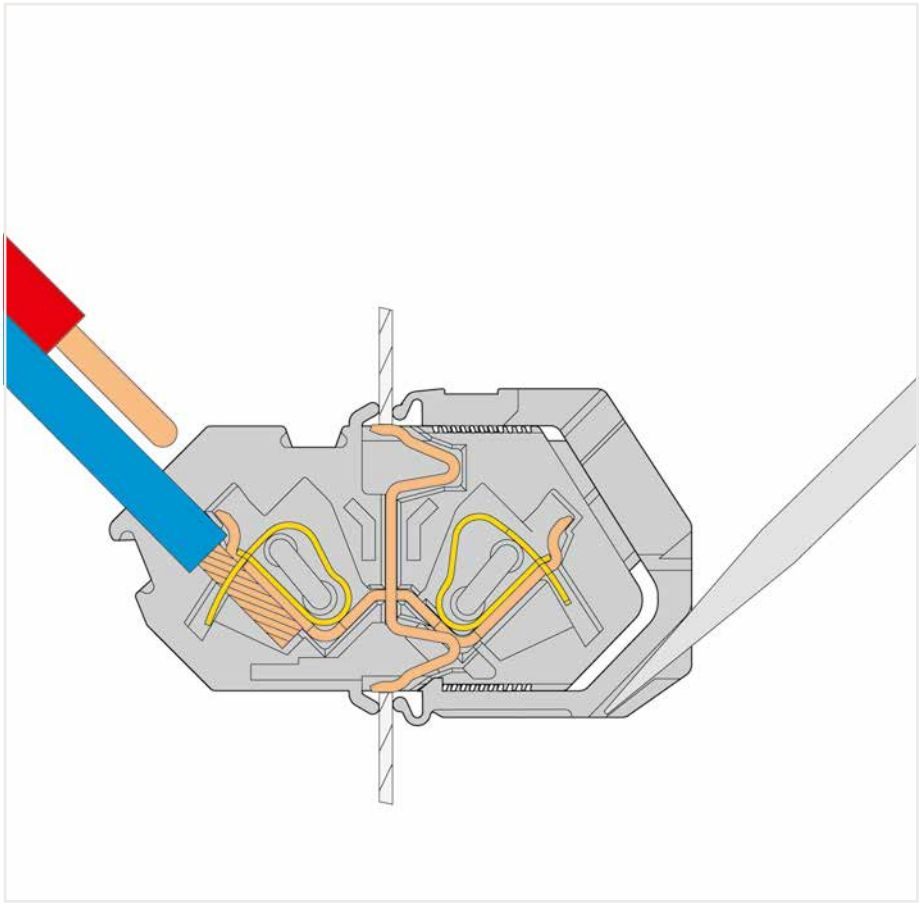

826 Series

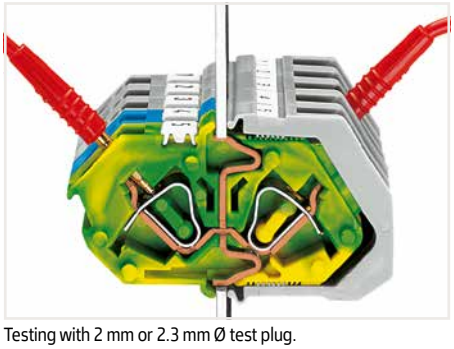

Testing with 2 mm or 2.3 mm Ø test plug.

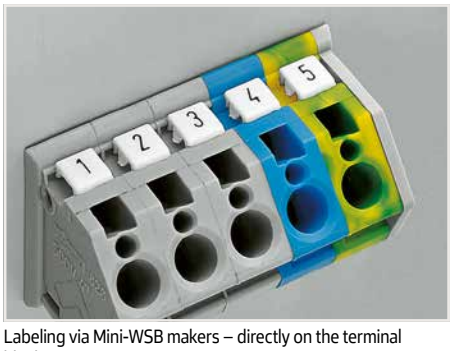

Labeling via Mini-WSB makers – directly on the terminal blocks.



Self-adhesive marking strips adhere directly on the retaining clips.

14

CAGE CLAMP®

Feedthrough Terminal Blocks 231, 731 and 226 Series

Description and Installation



Feedthrough PCB terminal strips – front-entry conductor termination



Feedthrough PCB terminal strips can be used as front-panel feedthrough for external conductor termination.



With flanges for PCB or front-panel mounting – either flush with enclosure or protruding

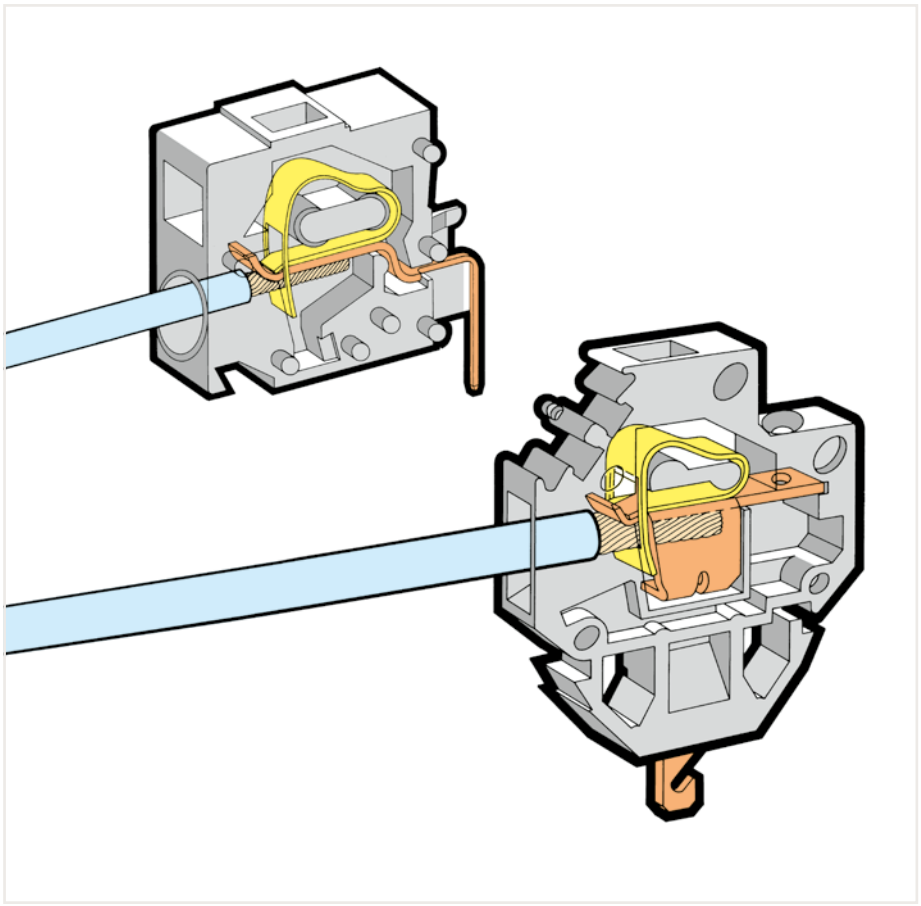

231, 731 and 226 Series



Snapping a 226 Series Feedthrough Terminal Block into the cutout.

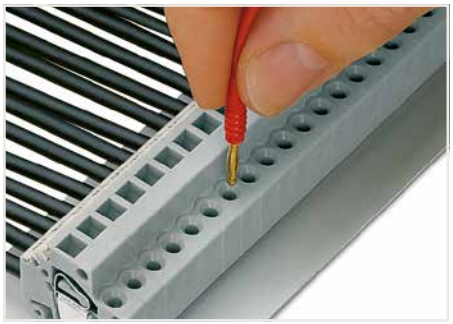

Testing with 2 mm Ø test plug – touch contact.

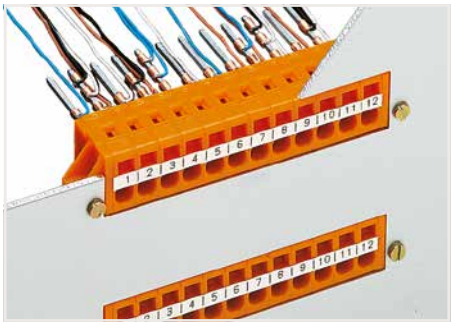

Feedthrough terminal strips with mounting flanges

Modular, panel feedthrough end terminal block ▸ 826 Series

CAGE CLAMP® ▸ Actuation type: Operating tool ▸ Mounting type: Locking claw ▸ 4 mm² ▸ Pin spacing: 7 mm / 0.276 inches

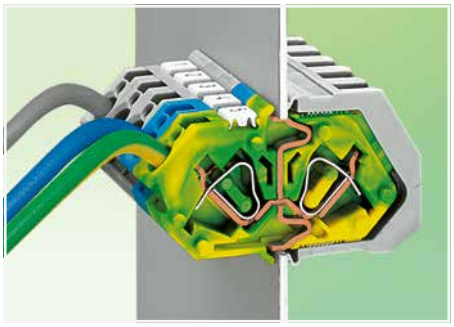

- Feedthrough terminal blocks with screwdriver-actuated CAGE CLAMP® on both sides
- Easy, tool-free installation
- Direct ground contact with enclosure/panel
- Test ports available on both sides

Electrical data			
Pin spacing	**7 mm / 0.276 inches**		
Suitable for neutral-grounded, three-phase, 4-wire systems rated at 400 V (conductor-to-conductor) per IEC/EN 60664-1.			
Ratings per	**IEC/EN 60664-1**		
Overvoltage category	III	III	II
Pollution degree	3	2	2
Nominal voltage	320 V	320 V	630 V
Rated impulse withstand voltage	4 kV	4 kV	4 kV
Rated current	32 A	32 A	32 A
Approvals per	**UL 1059**		
Use group	B	C	D
Rated voltage	300 V	150 V	300 V
Rated current	20 A	20 A	10 A
Approvals per	**CSA**		
Use group	B	C	D
Rated voltage	300 V	150 V	300 V
Rated current	20 A	20 A	10 A
Connection Data			
Connection technology	CAGE CLAMP®		
Strip length	9 … 10 mm / 0.35 … 0.39 inches		
Solid conductor	0.08 … 4 mm² / 28 … 12 AWG		
Fine-stranded conductor	0.08 … 4 mm² / 28 … 12 AWG		
Fine-stranded conductor; with insulated ferrule	0.25 … 2.5 mm²		
Fine-stranded conductor; with uninsulated ferrule	0.25 … 2.5 mm²		
Material data			
Material group	I		
Insulation material (main housing)	Polyamide (PA66)		
Flammability class per UL94	V0		
Clamping spring material	Chrome-nickel spring steel (CrNi)		
Contact material	Electrolytic copper (E_{Cu})		
Contact Plating	Tin		
Environmental requirements			
Limit temperature range	-60 … +105 °C		
Processing temperature	-35 … +60 °C		

14

Ferrule	Page 1081
Marking	Page 1067
Test and measurement	Page 1088
Tool	Page 1072
See technical section for further information	
Approvals and corresponding ratings, visit www.wago.com	

Modular, panel feedthrough end terminal block ▸ 826 Series

CAGE CLAMP® ▸ Actuation type: Operating tool ▸ Mounting type: Locking claw ▸ 4 mm² ▸ Pin spacing: 7 mm / 0.276 inches

Modular terminal block ▸ Housing wall thickness (max.): 4 mm ▸ Modular end terminal block



826-159

Color	Item No.	PU (SPU)
gray	826-159	50 (25)
blue	826-159/000-006	50 (25)
green-yellow	826-159/000-016	50 (25)

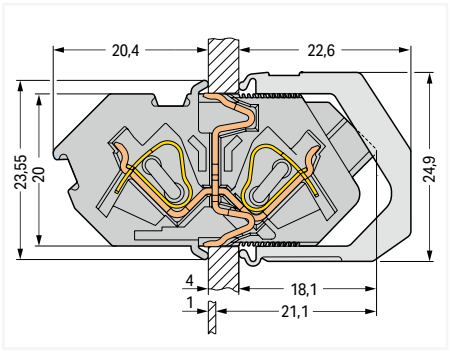

Cut-out dimensions: H = 20.1$^{+0.1}$ mm; L = (pole no. x 7 mm) + 1.6$^{+0.1}$ mm

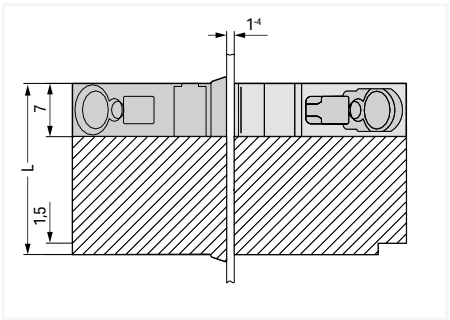

Modular terminal block ▸ Housing wall thickness (max.): 4 mm ▸ Modular center terminal block



826-160

Color	Item No.	PU (SPU)
gray	826-160	50 (25)
blue	826-160/000-006	50 (25)
green-yellow	826-160/000-016	50 (25)

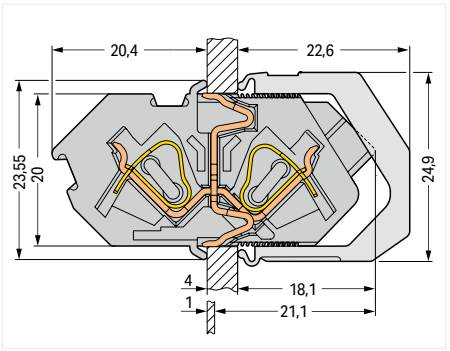

Cut-out dimensions: H = 20.1$^{+0.1}$ mm; L = (pole no. x 7 mm) + 1.6$^{+0.1}$ mm

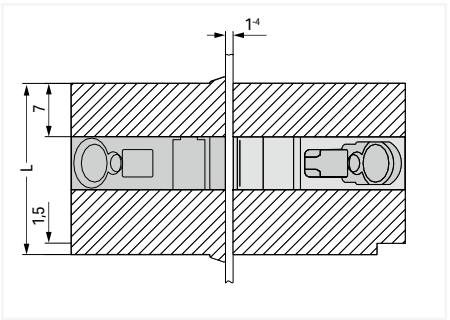

14

Accessories; for all products on this page



Retaining clip (as replacement); Color: gray

Pole number	Item No.	PU (SPU)
1	826-155	50 (25)
2	826-156	50 (25)
3	826-157	50 (25)



End plate; Width: 1.5 mm

Color	Item No.	PU (SPU)
gray	826-158	100 (25)
blue	826-158/000-006	100 (25)
green-yellow	826-158/000-016	100 (25)

PU = packaging unit; SPU = subpackaging unit; Dimensions in mm

Variants:

- Other pole numbers
- Other colors
- Direct marking
- Other versions (or variants) can be requested from WAGO Sales or configured at https://configurator.wago.com/.

Modular, panel feedthrough end terminal block ▸ 826 Series

CAGE CLAMP® ▸ Actuation type: Operating tool ▸ Mounting type: Locking claw ▸ 4 mm² ▸ Pin spacing: 7 mm / 0.276 inches

Modular terminal block ▸ Housing wall thickness (max.): 4 mm ▸ Scope of delivery including end plate and retaining clip



826-161

Color	Pole number	Item No.	PU
gray	1	826-161	50

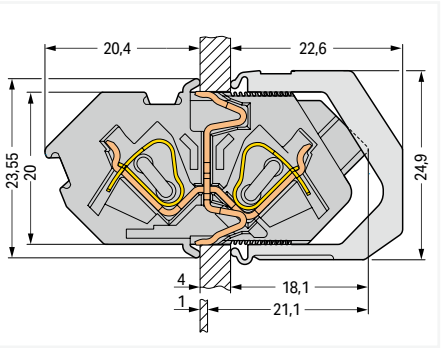

Cut-out dimensions: H = 20.1$^{+0.1}$ mm; L = (pole no. x 7 mm) + 1.6$^{+0.1}$ mm

Terminal strip ▸ Housing wall thickness (max.): 4 mm ▸ Scope of delivery including end plate and retaining clip



826-172

Pole number	Item No.	PU
2	826-162	50
3	826-163	50
4	826-164	50
5	826-165	50
6	826-166	50
7	826-167	25
8	826-168	25
9	826-169	25
10	826-170	25
11	826-171	10
12	826-172	10

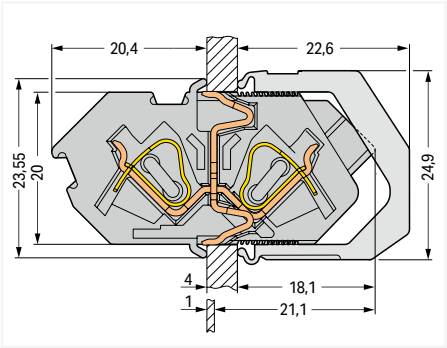

Cut-out dimensions: H = 20.1$^{+0.1}$ mm; L = (pole no. x 7 mm) + 1.6$^{+0.1}$ mm

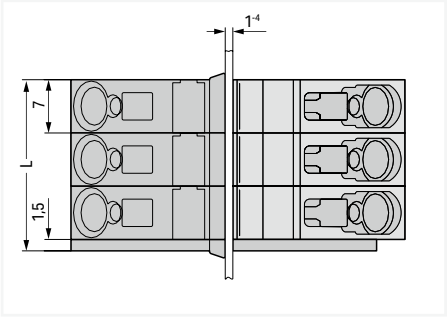

L = (pole no. x 7 mm) + 1.6 mm

PU = packaging unit; SPU = subpackaging unit; Dimensions in mm

Variants:
- Other pole numbers
- Other colors
- Direct marking
- Other versions (or variants) can be requested from WAGO Sales or configured at https://configurator.wago.com/.

Feedthrough terminal block ▸ 226 Series

CAGE CLAMP® ▸ Wire-wrap pin ▸ Actuation type: Operating tool ▸ Mounting type: Snap-in foot ▸ 4 mm² ▸ Pin spacing: 6 mm / 0.236 inches ▸ Modular terminal block

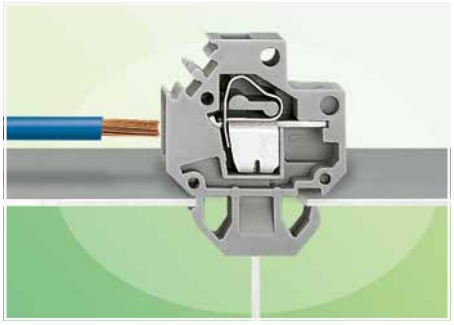

- Modular through terminal blocks with screwdriver-actuated CAGE CLAMP®
- Tool-free insertion into sheet metal cutout
- Conductor entry parallel to enclosure wall saves space

Electrical data				
Pin spacing	**6 mm / 0.236 inches**			
Ratings	**Wire-wrap pin**			
Ratings per	IEC/EN 60664-1			
Overvoltage category	III	III	II	
Pollution degree	3	2	2	
Nominal voltage	320 V	320 V	630 V	
Rated impulse withstand voltage	4 kV	4 kV	4 kV	
Rated current	4 A	4 A	4 A	
Approvals per	**UL 1059**			
Use group	B	C	D	
Rated voltage	300 V	300 V	600 V	
Rated current	4 A	4 A	4 A	
Approvals per	**CSA**			
Use group	B	C	D	
Rated voltage	300 V	300 V	600 V	
Rated current	4 A	4 A	4 A	

Connection Data	
Connection technology	CAGE CLAMP®
Number of connection points	1
Strip length	9 … 10 mm / 0.35 … 0.39 inches
Solid conductor	0.08 … 4 mm² / 28 … 12 AWG
Fine-stranded conductor	0.08 … 4 mm² / 28 … 12 AWG
Fine-stranded conductor; with insulated ferrule	0.25 … 2.5 mm²
Fine-stranded conductor; with uninsulated ferrule	0.25 … 2.5 mm²
Connection technology	Wire-wrap pin
Number of connection points	1

Material data	
Material group	I
Insulation material (main housing)	Polyamide (PA66)
Flammability class per UL94	V0
Clamping spring material	Chrome-nickel spring steel (CrNi)
Contact material	Electrolytic copper (E_{Cu})
Contact Plating	Tin

Environmental requirements	
Limit temperature range	-60 … +105 °C

Ferrule	Page 1081
Test and measurement	Page 1088
Tool	Page 1072
See technical section for further information	
Approvals and corresponding ratings, visit www.wago.com	

Feedthrough terminal block ▸ 226 Series

CAGE CLAMP® ▸ Wire-wrap pin ▸ Actuation type: Operating tool ▸ Mounting type: Snap-in foot ▸ 4 mm² ▸ Pin spacing: 6 mm / 0.236 inches ▸ Modular terminal block

Housing wall thickness (max.): 1.5 mm



Color	Pole number	Item No.	PU
gray	1	226-102	150

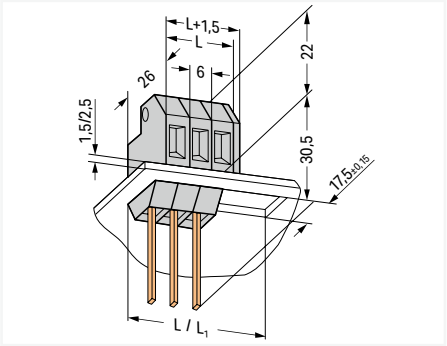

L = pole no. x 6 mm
L_1 = L + 1.5 mm

Housing wall thickness (max.): 2.5 mm



Color	Pole number	Item No.	PU
gray	1	226-112	150

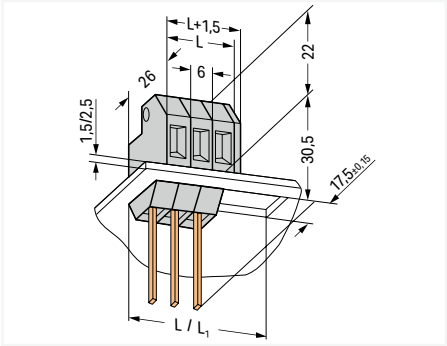

L = pole no. x 6 mm
L_1 = L + 1.5 mm

Accessories; for all products on this page



Intermediate plate; Width: 6 mm; Mounting type: Feed-through mounting; Color: gray

Housing wall thickness (max.)	Item No.	PU (SPU)
1.5 mm	226-109	100 (25)
2.5 mm	226-119	100 (25)



End plate; Width: 1.5 mm; Design: long

Color	Item No.	PU (SPU)
gray	226-110	100 (25)



End plate; Width: 1.5 mm; Design: short

Color	Item No.	PU (SPU)
gray	226-120	100 (25)

PU = packaging unit; SPU = subpackaging unit; Dimensions in mm

Feedthrough terminal block ▸ 226 Series

CAGE CLAMP® ▸ Solder connection ▸ Quick-connect contact ▸ Actuation type: Operating tool ▸ Mounting type: Snap-in foot ▸ 4 mm² ▸ Pin spacing: 6 mm / 0.236 inches ▸ Modular terminal block

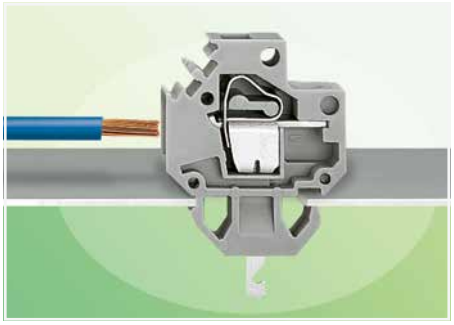

- Modular through terminal blocks with screwdriver-actuated CAGE CLAMP®
- Tool-free insertion into sheet metal cutout
- Conductor entry parallel to enclosure wall saves space

Electrical data			
Pin spacing	**6 mm / 0.236 inches**		
Ratings	**Solder connection**		
Ratings per	IEC/EN 60664-1		
Overvoltage category	III	III	II
Pollution degree	3	2	2
Nominal voltage	320 V	320 V	630 V
Rated impulse withstand voltage	4 kV	4 kV	4 kV
Rated current	20 A	20 A	20 A
Ratings	**Quick connect contact**		
Ratings per	IEC/EN 60664-1		
Overvoltage category	III	III	II
Pollution degree	3	2	2
Nominal voltage	320 V	320 V	630 V
Rated impulse withstand voltage	4 kV	4 kV	4 kV
Rated current	6 A	6 A	6 A
Approvals per	**UL 1059**		
Use group	B	C	D
Rated voltage	300 V	300 V	600 V
Rated current	6 A	6 A	5 A
Approvals per	**CSA**		
Use group	B	C	D
Rated voltage	300 V	300 V	600 V
Rated current	6 A	6 A	5 A

Connection Data	
Connection technology	CAGE CLAMP®
Number of connection points	1
Strip length	9 … 10 mm / 0.35 … 0.39 inches
Solid conductor	0.08 … 4 mm² / 28 … 12 AWG
Fine-stranded conductor	0.08 … 4 mm² / 28 … 12 AWG
Fine-stranded conductor; with insulated ferrule	0.25 … 2.5 mm²
Fine-stranded conductor; with uninsulated ferrule	0.25 … 2.5 mm²
Connection technology	Solder connection
Number of connection points	1
Connection technology	Quick-connect contact

Material data	
Material group	I
Insulation material (main housing)	Polyamide (PA66)
Flammability class per UL94	V0
Clamping spring material	Chrome-nickel spring steel (CrNi)
Contact material	Electrolytic copper (E_{Cu})
Contact Plating	Tin

Environmental requirements	
Limit temperature range	-60 … +105 °C

Ferrule	Page 1081
Test and measurement	Page 1088
Tool	Page 1072
See technical section for further information	
Approvals and corresponding ratings, visit www.wago.com	

Feedthrough terminal block ▸ 226 Series

CAGE CLAMP® ▸ Solder connection ▸ Quick-connect contact ▸ Actuation type: Operating tool ▸ Mounting type: Snap-in foot ▸ 4 mm² ▸ Pin spacing: 6 mm / 0.236 inches ▸ Modular terminal block

Housing wall thickness (max.): 1.5 mm



Solder pin dimensions	Item No.	PU
2.8 x 0.8 mm	226-101	200
4.8 x 0.8 mm	226-104	200

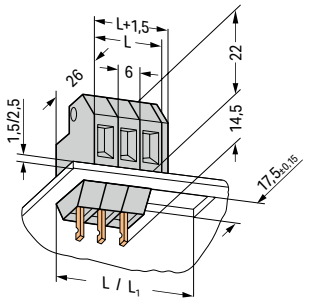

L = pole no. x 6 mm
L_1 = L + 1.5 mm

Housing wall thickness (max.): 2.5 mm



Solder pin dimensions	Item No.	PU
2.8 x 0.8 mm	226-111	200
4.8 x 0.8 mm	226-114	200

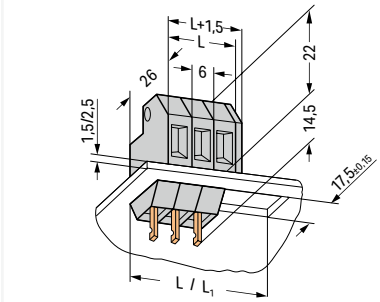

L = pole no. x 6 mm
L_1 = L + 1.5 mm

Accessories; for all products on this page



Intermediate plate; Width: 6 mm; Mounting type: Feed-through mounting; Color: gray

Housing wall thickness (max.)	Item No.	PU (SPU)
1.5 mm	226-109	100 (25)
2.5 mm	226-119	100 (25)



End plate; Width: 1.5 mm; Design: long

Color	Item No.	PU (SPU)
gray	226-110	100 (25)



End plate; Width: 1.5 mm; Design: short

Color	Item No.	PU (SPU)
gray	226-120	100 (25)

PU = packaging unit; SPU = subpackaging unit; Dimensions in mm

Feedthrough terminal block ▸ 226 Series

CAGE CLAMP® ▸ Contact pin ▸ Actuation type: Operating tool ▸ Mounting type: Snap-in foot ▸ 4 mm² ▸ Pin spacing: 6 mm / 0.236 inches ▸ Modular terminal block

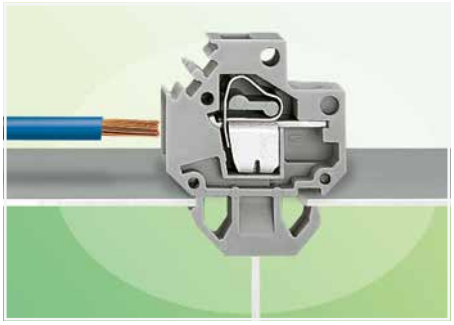

- Modular through terminal blocks with screwdriver-actuated CAGE CLAMP®
- Tool-free insertion into sheet metal cutout
- Conductor entry parallel to enclosure wall saves space

Electrical data			
Pin spacing	**6 mm / 0.236 inches**		
Ratings	**Contact pin**		
Ratings per	IEC/EN 60664-1		
Overvoltage category	III	III	II
Pollution degree	3	2	2
Nominal voltage	320 V	320 V	630 V
Rated impulse withstand voltage	4 kV	4 kV	4 kV
Rated current	4 A	4 A	4 A
Approvals per	**UL 1059**		
Use group	B	C	D
Rated voltage	300 V	300 V	600 V
Rated current	4 A	4 A	4 A
Approvals per	**CSA**		
Use group	B	C	D
Rated voltage	300 V	300 V	600 V
Rated current	4 A	4 A	4 A

Connection Data	
Connection technology	CAGE CLAMP®
Number of connection points	1
Strip length	9 … 10 mm / 0.35 … 0.39 inches
Solid conductor	0.08 … 4 mm² / 28 … 12 AWG
Fine-stranded conductor	0.08 … 4 mm² / 28 … 12 AWG
Fine-stranded conductor; with insulated ferrule	0.25 … 2.5 mm²
Fine-stranded conductor; with uninsulated ferrule	0.25 … 2.5 mm²
Connection technology	Contact pin
Number of connection points	1

Material data	
Material group	I
Insulation material (main housing)	Polyamide (PA66)
Flammability class per UL94	V0
Clamping spring material	Chrome-nickel spring steel (CrNi)
Contact material	Electrolytic copper (E_{Cu})
Contact Plating	Tin

Environmental requirements	
Limit temperature range	-60 … +105 °C

Ferrule	Page 1081
Test and measurement	Page 1088
Tool	Page 1072

See technical section for further information

Approvals and corresponding ratings, visit www.wago.com

Feedthrough terminal block ▸ 226 Series

CAGE CLAMP® ▸ Contact pin ▸ Actuation type: Operating tool ▸ Mounting type: Snap-in foot ▸ 4 mm² ▸ Pin spacing: 6 mm / 0.236 inches ▸ Modular terminal block

Housing wall thickness (max.): 1.5 mm



Color	Pole number	Item No.	PU
gray	1	226-103	150

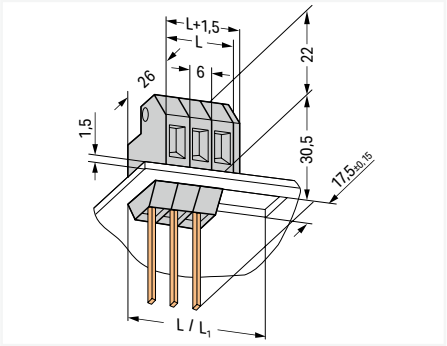

L = pole no. x 6 mm
L_1 = L + 1.5 mm

Housing wall thickness (max.): 2.5 mm



Color	Pole number	Item No.	PU
gray	1	226-113	150

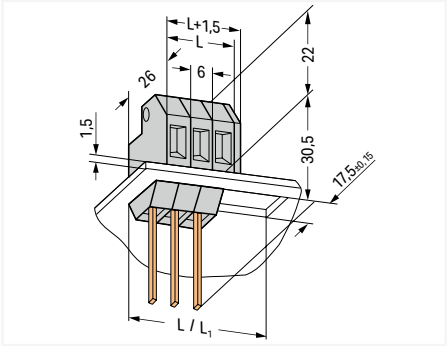

L = pole no. x 6 mm
L_1 = L + 1.5 mm

Accessories; for all products on this page



Intermediate plate; Width: 6 mm; Mounting type: Feed-through mounting; Color: gray

Housing wall thickness (max.)	Item No.	PU (SPU)
1.5 mm	226-109	100 (25)
2.5 mm	226-119	100 (25)



End plate; Width: 1.5 mm; Design: long

Color	Item No.	PU (SPU)
gray	226-110	100 (25)



End plate; Width: 1.5 mm; Design: short

Color	Item No.	PU (SPU)
gray	226-120	100 (25)

PU = packaging unit; SPU = subpackaging unit; Dimensions in mm

Feedthrough terminal block ▸ 828 Series

CAGE CLAMP® ▸ Actuation type: Lever ▸ Mounting type: Locking claw ▸ 16 mm² ▸ Pin spacing: 11.5 mm / 0.453 inches ▸ Terminal strip

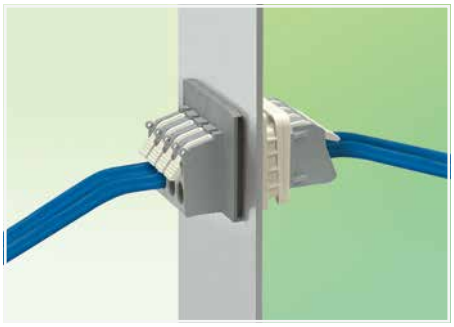

- Feedthrough terminal strips with CAGE CLAMP® on both sides
- Easy, tool-free installation
- Tool-free termination – fingers open/close levers
- Several clamping units can be held open simultaneously – convenient for terminating multi-core cables
- 600 V UL

Electrical data				
Pin spacing	**11.5 mm / 0.453 inches**			
Ratings per	**IEC/EN 60664-1**			
Overvoltage category	III	III	II	
Pollution degree	3	2	2	
Nominal voltage	1000 V	1000 V	1000 V	
Rated impulse withstand voltage	8 kV	8 kV	8 kV	
Rated current	57 A	57 A	57 A	
Approvals per	**UL 1059**			
Use group	B	C	D	
Rated voltage	600 V	600 V	-	
Rated current	30 A	30 A	-	
Approvals per	**CSA**			
Use group	B	C	D	
Rated voltage	600 V	600 V	-	
Rated current	30 A	30 A	-	

Connection Data	
Connection technology	CAGE CLAMP®
Strip length	12 … 13 mm / 0.47 … 0.51 inches
Solid conductor	1.5 … 16 mm² / 16 … 6 AWG
Fine-stranded conductor	1.5 … 16 mm² / 16 … 6 AWG
Fine-stranded conductor; with insulated ferrule	1.5 … 10 mm²
Fine-stranded conductor; with uninsulated ferrule	1.5 … 10 mm²

Material data	
Material group	I
Insulation material (main housing)	Polyamide (PA66)
Flammability class per UL94	V0
Clamping spring material	Chrome-nickel spring steel (CrNi)
Contact material	Electrolytic copper (E_{Cu})
Contact Plating	Tin

Environmental requirements	
Limit temperature range	-60 … +105 °C
Processing temperature	-35 … +60 °C

14

Ferrule Page 1081

See technical section for further information

Approvals and corresponding ratings, visit www.wago.com

Feedthrough terminal block ▸ 828 Series

CAGE CLAMP® ▸ Actuation type: Lever ▸ Mounting type: Locking claw ▸ 16 mm² ▸ Pin spacing: 11.5 mm / 0.453 inches ▸ Terminal strip

Housing wall thickness (max.): 3 mm



828-334

	Item No.	PU
	828-264/313-000	20
	828-334	15

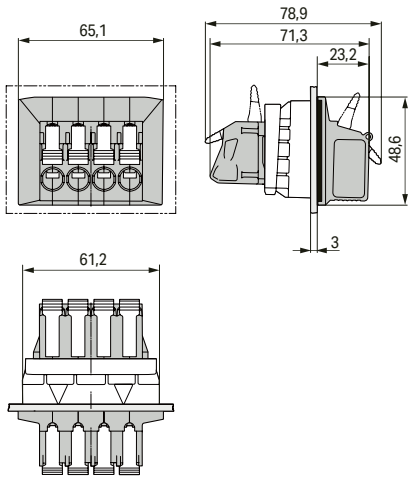

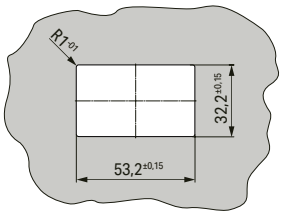



Insert terminal strip from the outside.



Snap the panel thickness adapter on from the inside.



Secure to panel via locking clip.



Mounted feedthrough terminal strip (internal)

PU = packaging unit; SPU = subpackaging unit; Dimensions in mm

Variants:

- Other pole numbers
- Adapters for varying sheet panel thicknesses
- Direct marking
- Other versions (or variants) can be requested from WAGO Sales or configured at https://configurator.wago.com/.

PCB terminal block ▸ 741 Series

CAGE CLAMP® ▸ Actuation type: Push-button ▸ 2.5 mm² ▸ Terminal strip

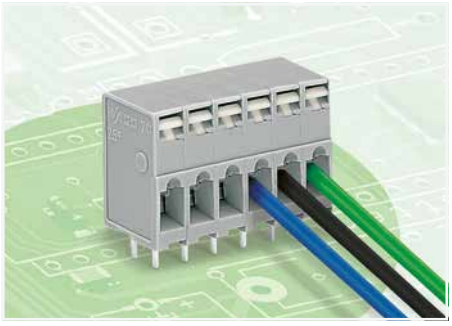

- Feedthrough PCB terminal strips with push-button actuated CAGE CLAMP®
- Simple, push-button wiring
- Test slot integrated into upper-portion of conductor entry for test pins

Electrical data									
Pin spacing	**5 mm / 0.197 inches**			**7.5 mm / 0.295 inches**			**10 mm / 0.394 inches**		
Ratings per	**IEC/EN 60664-1**			**IEC/EN 60664-1**			**IEC/EN 60664-1**		
Overvoltage category	III	III	II	III	III	II	III	III	II
Pollution degree	3	2	2	3	2	2	3	2	2
Nominal voltage	250 V	320 V	630 V	400 V	630 V	1000 V	630 V	1000 V	1000 V
Rated impulse withstand voltage	4 kV	4 kV	4 kV	6 kV	6 kV	6 kV	8 kV	8 kV	8 kV
Rated current	16 A	16 A	16 A	16 A	16 A	16 A	16 A	16 A	16 A
Approvals per	**UL 1059**			**UL 1059**			**UL 1059**		
Use group	B	C	D	B	C	D	B	C	D
Rated voltage	300 V	-	300 V	300 V	-	300 V	300 V	-	300 V
Rated current	10 A	-	10 A	10 A	-	10 A	10 A	-	10 A
Approvals per	**CSA**			**CSA**			**CSA**		
Use group	B	C	D	B	C	D	B	C	D
Rated voltage	300 V	-	300 V	300 V	-	300 V	300 V	-	300 V
Rated current	16 A	-	10 A	16 A	-	10 A	16 A	-	10 A

Connection Data	
Connection technology	CAGE CLAMP®
Strip length	5 … 6 mm / 0.2 … 0.24 inches
Conductor connection direction to PCB	0 °
Solid conductor	0.08 … 2.5 mm² / 28 … 12 AWG
Fine-stranded conductor	0.08 … 2.5 mm² / 28 … 12 AWG
Fine-stranded conductor; with insulated ferrule	0.25 … 1.5 mm²
Fine-stranded conductor; with uninsulated ferrule	0.25 … 1.5 mm²

Material data	
Material group	I
Insulation material (main housing)	Polyamide (PA66)
Flammability class per UL94	V0
Clamping spring material	Chrome-nickel spring steel (CrNi)
Contact material	Electrolytic copper (E_{Cu})
Contact Plating	Tin

Mechanical data	
Solder pin arrangement	over the entire terminal strip (in-line)
Number of solder pins per potential	2
Solder pin length	4 mm
Solder pin dimensions	0.7 x 0.7 mm
Drilled hole diameter	1.1 $^{(+0.1)}$ mm

Environmental requirements	
Limit temperature range	-60 … +105 °C

Ferrule	Page 1081
Marking	Page 1067
Tool	Page 1072
See technical section for further information	
Approvals and corresponding ratings, visit www.wago.com	

PCB terminal block ▸ 741 Series

CAGE CLAMP® ▸ Actuation type: Push-button ▸ 2.5 mm² ▸ Terminal strip

Pin spacing: 5 mm / 0.197 inches



741-112

Pole number	Item No.	PU (SPU)
2	741-102	400 (100)
3	741-103	280 (70)
4	741-104	220 (55)
5	741-105	180 (45)
6	741-106	140 (35)
7	741-107	120 (30)
8	741-108	100 (25)
9	741-109	100 (25)
10	741-110	80 (20)
12	741-112	60 (15)
16	741-116	40 (10)

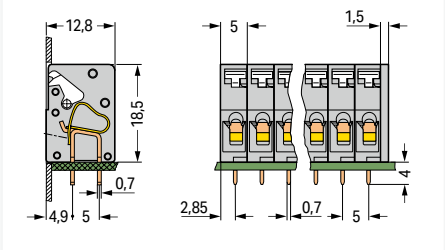

Total length = (pole no. x pin spacing) + 1.5 mm

Pin spacing: 7.5 mm / 0.295 inches



741-308

Pole number	Item No.	PU (SPU)
2	741-302	340 (85)
3	741-303	220 (55)
4	741-304	160 (40)
5	741-305	120 (30)
6	741-306	100 (25)
7	741-307	80 (20)
8	741-308	80 (20)
9	741-309	60 (15)
10	741-310	60 (15)

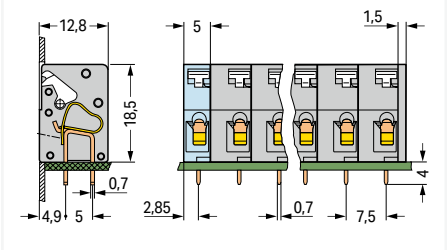

Total length = (pole no. – 1) x pin spacing + 5 mm + 1.5 mm

Pin spacing: 10 mm / 0.394 inches



741-506

Pole number	Item No.	PU (SPU)
2	741-502	280 (70)
3	741-503	160 (40)
4	741-504	120 (30)
5	741-505	100 (25)
6	741-506	80 (20)
7	741-507	60 (15)
8	741-508	60 (15)

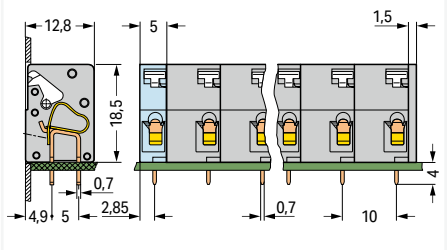

Total length = (pole no. – 1) x pin spacing + 5 mm + 1.5 mm

PU = packaging unit; SPU = subpackaging unit; Dimensions in mm

Variants:

- Other pole numbers
- Other colors
- Direct marking
- Other versions (or variants) can be requested from WAGO Sales or configured at https://configurator.wago.com/.

PCB terminal block ▸ 741 Series

CAGE CLAMP® ▸ Actuation type: Push-button ▸ Mounting type: Mounting flange ▸ 2.5 mm² ▸ Terminal strip

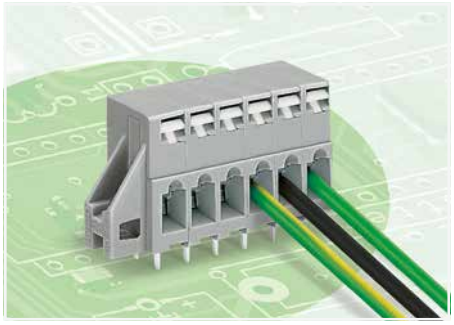

- Feedthrough PCB terminal strips with push-button actuated CAGE CLAMP®
- Simple, push-button wiring
- Test slot integrated into upper-portion of conductor entry for test pins
- Mounting flanges for additional mechanical stability

Electrical data									
Pin spacing	**5 mm / 0.197 inches**			**7.5 mm / 0.295 inches**			**10 mm / 0.394 inches**		
Ratings per	**IEC/EN 60664-1**			**IEC/EN 60664-1**			**IEC/EN 60664-1**		
Overvoltage category	III	III	II	III	III	II	III	III	II
Pollution degree	3	2	2	3	2	2	3	2	2
Nominal voltage	250 V	320 V	630 V	400 V	630 V	1000 V	630 V	1000 V	1000 V
Rated impulse withstand voltage	4 kV	4 kV	4 kV	6 kV	6 kV	6 kV	8 kV	8 kV	8 kV
Rated current	16 A	16 A	16 A	16 A	16 A	16 A	16 A	16 A	16 A
Approvals per	**UL 1059**			**UL 1059**			**UL 1059**		
Use group	B	C	D	B	C	D	B	C	D
Rated voltage	300 V	-	300 V	300 V	-	300 V	300 V	-	300 V
Rated current	10 A	-	10 A	10 A	-	10 A	10 A	-	10 A
Approvals per	**CSA**			**CSA**			**CSA**		
Use group	B	C	D	B	C	D	B	C	D
Rated voltage	300 V	-	300 V	300 V	-	300 V	300 V	-	300 V
Rated current	16 A	-	10 A	16 A	-	10 A	16 A	-	10 A

Connection Data	
Connection technology	CAGE CLAMP®
Strip length	5 … 6 mm / 0.2 … 0.24 inches
Conductor connection direction to PCB	0 °
Solid conductor	0.08 … 2.5 mm² / 28 … 12 AWG
Fine-stranded conductor	0.08 … 2.5 mm² / 28 … 12 AWG
Fine-stranded conductor; with insulated ferrule	0.25 … 1.5 mm²
Fine-stranded conductor; with uninsulated ferrule	0.25 … 1.5 mm²

Material data	
Material group	I
Insulation material (main housing)	Polyamide (PA66)
Flammability class per UL94	V0
Clamping spring material	Chrome-nickel spring steel (CrNi)
Contact material	Electrolytic copper (E_{Cu})
Contact Plating	Tin

Mechanical data	
Solder pin arrangement	over the entire terminal strip (in-line)
Number of solder pins per potential	2
Solder pin length	4 mm
Solder pin dimensions	0.7 x 0.7 mm
Drilled hole diameter	1.1 $^{(+0.1)}$ mm

Environmental requirements	
Limit temperature range	-60 … +105 °C

Ferrule	Page 1081
Marking	Page 1067
Tool	Page 1072
See technical section for further information	
Approvals and corresponding ratings, visit www.wago.com	

PCB terminal block ▸ 741 Series

CAGE CLAMP® ▸ Actuation type: Push-button ▸ Mounting type: Mounting flange ▸ 2.5 mm² ▸ Terminal strip

Pin spacing: 5 mm / 0.197 inches



741-142

Pole number	Item No.	PU (SPU)
2	741-132	180 (45)
3	741-133	160 (40)
4	741-134	140 (35)
5	741-135	120 (30)
6	741-136	100 (25)
7	741-137	80 (20)
8	741-138	80 (20)
9	741-139	80 (20)
10	741-140	60 (15)
12	741-142	60 (15)
16	741-146	40 (10)

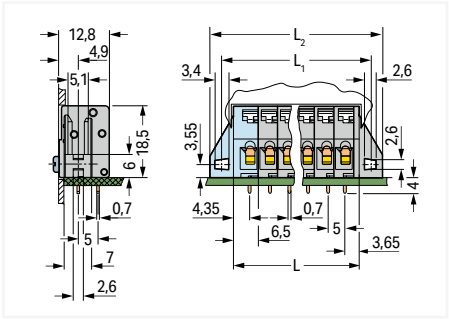

L = (pole no. – 1) x pin spacing + 6.5 mm + 1.5 mm
L_1 = L + 5.8 mm
L_2 = L_1 + 6 mm

Pin spacing: 7.5 mm / 0.295 inches



741-328

Pole number	Item No.	PU (SPU)
2	741-322	160 (40)
3	741-323	140 (35)
4	741-324	100 (25)
5	741-325	80 (20)
6	741-326	80 (20)
7	741-327	60 (15)
8	741-328	60 (15)
9	741-329	60 (15)
10	741-330	40 (10)

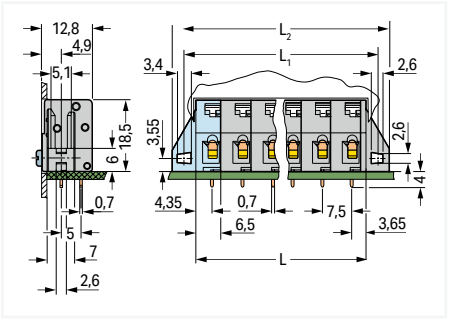

L = (pole no. – 1) x pin spacing + 6.5 mm + 1.5 mm
L_1 = L + 5.8 mm
L_2 = L_1 + 6 mm

Pin spacing: 10 mm / 0.394 inches



741-526

Pole number	Item No.	PU (SPU)
2	741-522	160 (40)
3	741-523	120 (30)
4	741-524	80 (20)
5	741-525	80 (20)
6	741-526	60 (15)
7	741-527	60 (15)
8	741-528	40 (10)

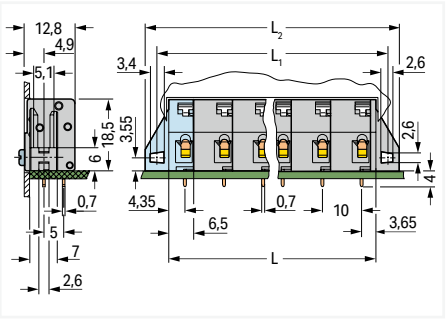

L = (pole no. – 1) x pin spacing + 6.5 mm + 1.5 mm
L_1 = L + 5.8 mm
L_2 = L_1 + 6 mm

PU = packaging unit; SPU = subpackaging unit; Dimensions in mm

Variants:
- Other pole numbers
- Other colors
- Direct marking
- Other versions (or variants) can be requested from WAGO Sales or configured at https://configurator.wago.com/.

PCB terminal block ▸ 741 Series

CAGE CLAMP® ▸ Actuation type: Push-button ▸ 2.5 mm² ▸ Terminal strip

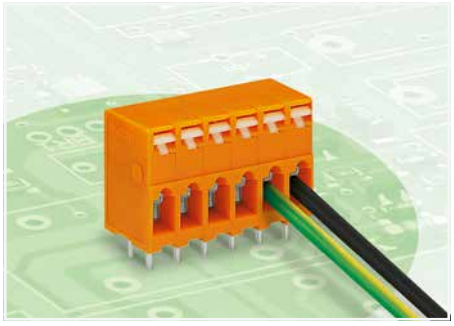

- Feedthrough PCB terminal strips with push-button actuated CAGE CLAMP®
- Simple, push-button wiring
- Test slot integrated into upper-portion of conductor entry for test pins

Electrical data									
Pin spacing	**5.08 mm / 0.2 inches**			**7.62 mm / 0.3 inches**			**10.16 mm / 0.4 inches**		
Ratings per	**IEC/EN 60664-1**			**IEC/EN 60664-1**			**IEC/EN 60664-1**		
Overvoltage category	III	III	II	III	III	II	III	III	II
Pollution degree	3	2	2	3	2	2	3	2	2
Nominal voltage	250 V	320 V	630 V	400 V	630 V	1000 V	630 V	1000 V	1000 V
Rated impulse withstand voltage	4 kV	4 kV	4 kV	6 kV	6 kV	6 kV	8 kV	8 kV	8 kV
Rated current	16 A	16 A	16 A	16 A	16 A	16 A	16 A	16 A	16 A
Approvals per	**UL 1059**			**UL 1059**			**UL 1059**		
Use group	B	C	D	B	C	D	B	C	D
Rated voltage	300 V	-	300 V	300 V	-	300 V	300 V	-	300 V
Rated current	10 A	-	10 A	10 A	-	10 A	10 A	-	10 A
Approvals per	**CSA**			**CSA**			**CSA**		
Use group	B	C	D	B	C	D	B	C	D
Rated voltage	300 V	-	300 V	300 V	-	300 V	300 V	-	300 V
Rated current	16 A	-	10 A	16 A	-	10 A	16 A	-	10 A

Connection Data	
Connection technology	CAGE CLAMP®
Strip length	5 … 6 mm / 0.2 … 0.24 inches
Conductor connection direction to PCB	0 °
Solid conductor	0.08 … 2.5 mm² / 28 … 12 AWG
Fine-stranded conductor	0.08 … 2.5 mm² / 28 … 12 AWG
Fine-stranded conductor; with insulated ferrule	0.25 … 1.5 mm²
Fine-stranded conductor; with uninsulated ferrule	0.25 … 1.5 mm²

Material data	
Material group	I
Insulation material (main housing)	Polyamide (PA66)
Flammability class per UL94	V0
Clamping spring material	Chrome-nickel spring steel (CrNi)
Contact material	Electrolytic copper (E_{Cu})
Contact Plating	Tin

Mechanical data	
Solder pin arrangement	over the entire terminal strip (in-line)
Number of solder pins per potential	2
Solder pin length	4 mm
Solder pin dimensions	0.7 x 0.7 mm
Drilled hole diameter	1.1 $^{(+0.1)}$ mm

Environmental requirements	
Limit temperature range	-60 … +105 °C

14

Ferrule	Page 1081
Marking	Page 1067
Tool	Page 1072

See technical section for further information

Approvals and corresponding ratings, visit www.wago.com

PCB terminal block ▸ 741 Series

CAGE CLAMP® ▸ Actuation type: Push-button ▸ 2.5 mm² ▸ Terminal strip

Pin spacing: 5.08 mm / 0.2 inches

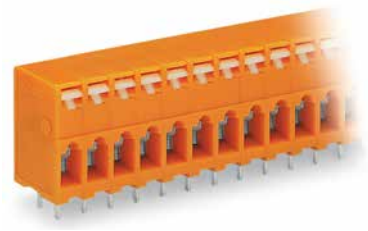

741-212

Pole number	Item No.	PU (SPU)
2	741-202	400 (100)
3	741-203	280 (70)
4	741-204	220 (55)
5	741-205	160 (40)
6	741-206	140 (35)
7	741-207	120 (30)
8	741-208	100 (25)
9	741-209	100 (25)
10	741-210	80 (20)
12	741-212	60 (15)
16	741-216	40 (10)

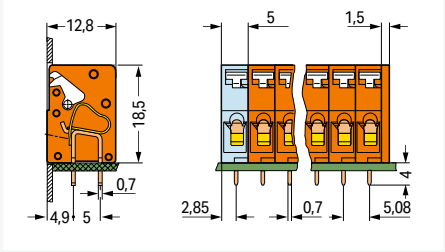

Total length = (pole no. – 1) x pin spacing + 5 mm + 1.5 mm

Pin spacing: 7.62 mm / 0.3 inches

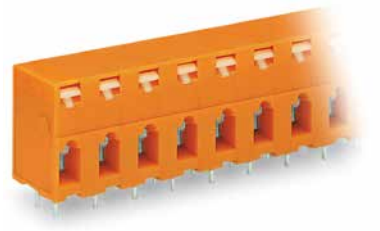

741-408

Pole number	Item No.	PU (SPU)
2	741-402	320 (80)
3	741-403	220 (55)
4	741-404	160 (40)
5	741-405	120 (30)
6	741-406	100 (25)
7	741-407	80 (20)
8	741-408	80 (20)
9	741-409	60 (15)
10	741-410	60 (15)

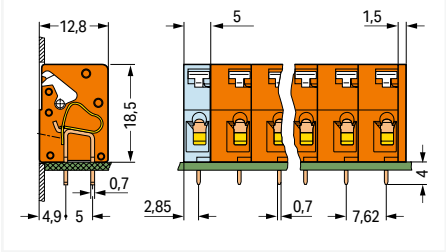

Total length = (pole no. – 1) x pin spacing + 5 mm + 1.5 mm

Pin spacing: 10.16 mm / 0.4 inches

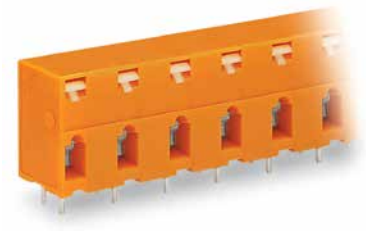

741-606

Pole number	Item No.	PU (SPU)
2	741-602	280 (70)
3	741-603	160 (40)
4	741-604	120 (30)
5	741-605	100 (25)
6	741-606	80 (20)
7	741-607	60 (15)
8	741-608	60 (15)

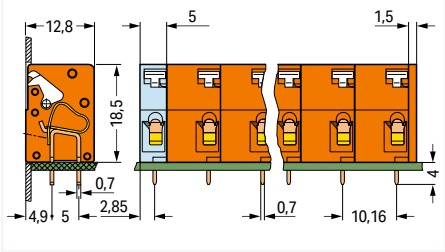

Total length = (pole no. – 1) x pin spacing + 5 mm + 1.5 mm

PU = packaging unit; SPU = subpackaging unit; Dimensions in mm

Variants:

- Other pole numbers
- Other colors
- Direct marking
- Other versions (or variants) can be requested from WAGO Sales or configured at https://configurator.wago.com/.

PCB terminal block ▸ 741 Series

CAGE CLAMP® ▸ Actuation type: Push-button ▸ Mounting type: Mounting flange ▸ 2.5 mm² ▸ Terminal strip

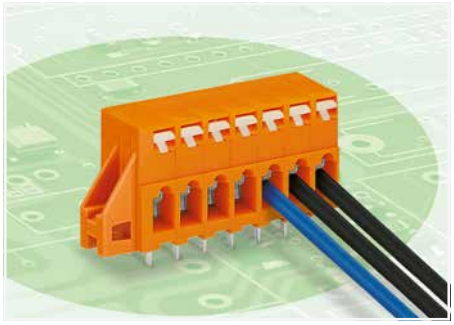

- Feedthrough PCB terminal strips with push-button actuated CAGE CLAMP®
- Simple, push-button wiring
- Test slot integrated into upper-portion of conductor entry for test pins
- Mounting flanges for additional mechanical stability

Electrical data									
Pin spacing	**5.08 mm / 0.2 inches**			**7.62 mm / 0.3 inches**			**10.16 mm / 0.4 inches**		
Ratings per	**IEC/EN 60664-1**			**IEC/EN 60664-1**			**IEC/EN 60664-1**		
Overvoltage category	III	III	II	III	III	II	III	III	II
Pollution degree	3	2	2	3	2	2	3	2	2
Nominal voltage	250 V	320 V	630 V	400 V	630 V	1000 V	630 V	1000 V	1000 V
Rated impulse withstand voltage	4 kV	4 kV	4 kV	6 kV	6 kV	6 kV	8 kV	8 kV	8 kV
Rated current	16 A	16 A	16 A	16 A	16 A	16 A	16 A	16 A	16 A
Approvals per	**UL 1059**			**UL 1059**			**UL 1059**		
Use group	B	C	D	B	C	D	B	C	D
Rated voltage	300 V	-	300 V	300 V	-	300 V	300 V	-	300 V
Rated current	10 A	-	10 A	10 A	-	10 A	10 A	-	10 A
Approvals per	**CSA**			**CSA**			**CSA**		
Use group	B	C	D	B	C	D	B	C	D
Rated voltage	300 V	-	300 V	300 V	-	300 V	300 V	-	300 V
Rated current	16 A	-	10 A	16 A	-	10 A	16 A	-	10 A

Connection Data	
Connection technology	CAGE CLAMP®
Strip length	5 … 6 mm / 0.2 … 0.24 inches
Conductor connection direction to PCB	0 °
Solid conductor	0.08 … 2.5 mm² / 28 … 12 AWG
Fine-stranded conductor	0.08 … 2.5 mm² / 28 … 12 AWG
Fine-stranded conductor; with insulated ferrule	0.25 … 1.5 mm²
Fine-stranded conductor; with uninsulated ferrule	0.25 … 1.5 mm²

Material data	
Material group	I
Insulation material (main housing)	Polyamide (PA66)
Flammability class per UL94	V0
Clamping spring material	Chrome-nickel spring steel (CrNi)
Contact material	Electrolytic copper (E_{Cu})
Contact Plating	Tin

Mechanical data	
Solder pin arrangement	over the entire terminal strip (in-line)
Number of solder pins per potential	2
Solder pin length	4 mm
Solder pin dimensions	0.7 x 0.7 mm
Drilled hole diameter	1.1 $^{(+0.1)}$ mm

Environmental requirements	
Limit temperature range	-60 … +105 °C

14

Ferrule	Page 1081
Marking	Page 1067
Tool	Page 1072
See technical section for further information	
Approvals and corresponding ratings, visit www.wago.com	

PCB terminal block ▸ 741 Series

CAGE CLAMP® ▸ Actuation type: Push-button ▸ Mounting type: Mounting flange ▸ 2.5 mm² ▸ Terminal strip

Pin spacing: 5.08 mm / 0.2 inches

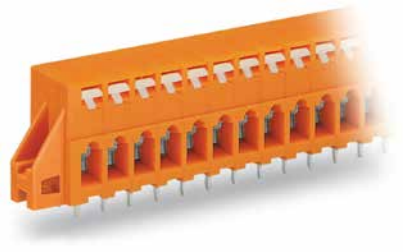

741-242

Pole number	Item No.	PU (SPU)
2	741-232	180 (45)
3	741-233	160 (40)
4	741-234	120 (30)
5	741-235	120 (30)
6	741-236	100 (25)
7	741-237	80 (20)
8	741-238	80 (20)
9	741-239	80 (20)
10	741-240	60 (15)
12	741-242	60 (15)
16	741-246	40 (10)

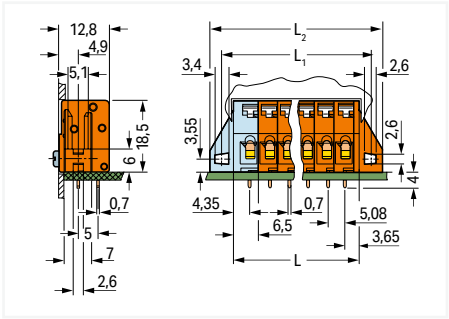

L = (pole no. – 1) x pin spacing + 6.5 mm + 1.5 mm
L_1 = L + 5.8 mm
L_2 = L_1 + 6 mm

Pin spacing: 7.62 mm / 0.3 inches

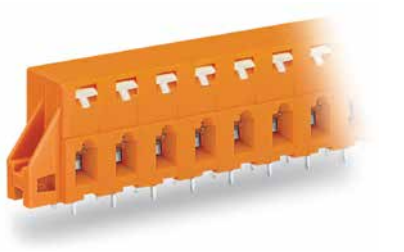

741-428

Pole number	Item No.	PU (SPU)
2	741-422	160 (40)
3	741-423	140 (35)
4	741-424	100 (25)
5	741-425	80 (20)
6	741-426	80 (20)
7	741-427	60 (15)
8	741-428	60 (15)
9	741-429	40 (10)
10	741-430	40 (10)

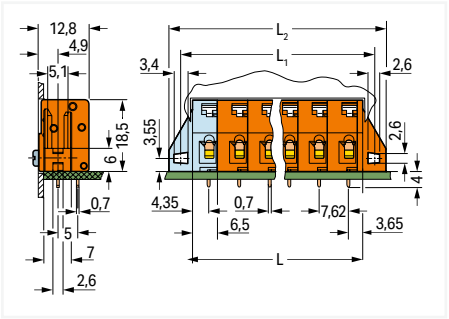

L = (pole no. – 1) x pin spacing + 6.5 mm + 1.5 mm
L_1 = L + 5.8 mm
L_2 = L_1 + 6 mm

Pin spacing: 10.16 mm / 0.4 inches

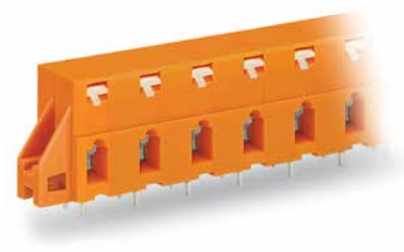

741-626

Pole number	Item No.	PU (SPU)
2	741-622	160 (40)
3	741-623	120 (30)
4	741-624	80 (20)
5	741-625	80 (20)
6	741-626	60 (15)
7	741-627	40 (10)
8	741-628	40 (10)

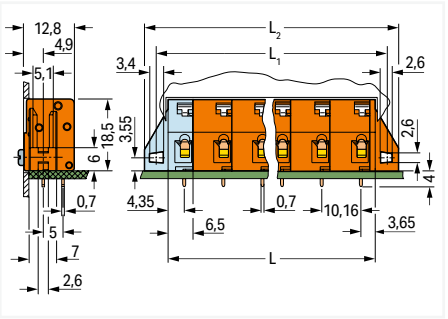

L = (pole no. – 1) x pin spacing + 6.5 mm + 1.5 mm
L_1 = L + 5.8 mm
L_2 = L_1 + 6 mm

PU = packaging unit; SPU = subpackaging unit; Dimensions in mm

Variants:
- Other pole numbers
- Other colors
- Direct marking
- Other versions (or variants) can be requested from WAGO Sales or configured at https://configurator.wago.com/.

PCB terminal block ▸ 231 Series

CAGE CLAMP® ▸ Actuation type: Operating tool ▸ Mounting type: Mounting flange ▸ 2.5 mm² ▸ Pin spacing: 5 mm / 0.197 inches ▸ Terminal strip

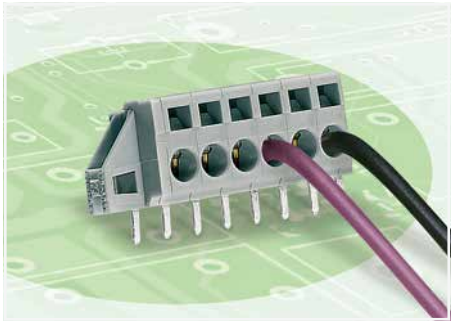

- Feedthrough PCB terminal strips with screwdriver-actuated CAGE CLAMP®
- With flanges for PCB or front-panel mounting – either flush with enclosure or protruding

Electrical data			
Pin spacing	**5 mm / 0.197 inches**		
Ratings per	**IEC/EN 60664-1**		
Overvoltage category	III	III	II
Pollution degree	3	2	2
Nominal voltage	320 V	320 V	630 V
Rated impulse withstand voltage	4 kV	4 kV	4 kV
Rated current	16 A	16 A	16 A
Approvals per	**UL 1059**		
Use group	B	C	D
Rated voltage	300 V	150 V	300 V
Rated current	15 A	15 A	10 A
Approvals per	**CSA**		
Use group	B	C	D
Rated voltage	300 V	150 V	300 V
Rated current	15 A	15 A	10 A

Connection Data	
Connection technology	CAGE CLAMP®
Strip length	8 … 9 mm / 0.31 … 0.35 inches
Conductor connection direction to PCB	0 °
Solid conductor	0.08 … 2.5 mm² / 28 … 14 AWG
Fine-stranded conductor	0.08 … 2.5 mm² / 28 … 14 AWG
Fine-stranded conductor; with insulated ferrule	0.25 … 1.5 mm²
Fine-stranded conductor; with uninsulated ferrule	0.25 … 2.5 mm²
Material data	
Material group	I
Insulation material (main housing)	Polyamide (PA66)
Flammability class per UL94	V0
Clamping spring material	Chrome-nickel spring steel (CrNi)
Contact material	Electrolytic copper (E_{Cu})
Contact Plating	Tin
Mechanical data	
Solder pin arrangement	over the entire terminal strip (in-line)
Number of solder pins per potential	1
Solder pin length	4.7 mm
Solder pin dimensions	0.8 x 1.3 mm
Drilled hole diameter	1.8 $^{(+0.1)}$ mm
Environmental requirements	
Limit temperature range	-60 … +105 °C
Processing temperature	-35 … +60 °C

Ferrule	Page 1081
Installation	Page 500, 1071
Marking	Page 1067
Tool	Page 1072
See technical section for further information	
Approvals and corresponding ratings, visit www.wago.com	

PCB terminal block ▸ 231 Series

CAGE CLAMP® ▸ Actuation type: Operating tool ▸ Mounting type: Mounting flange ▸ 2.5 mm² ▸ Pin spacing: 5 mm / 0.197 inches ▸ Terminal strip

Housing wall thickness (max.): 1.5 mm

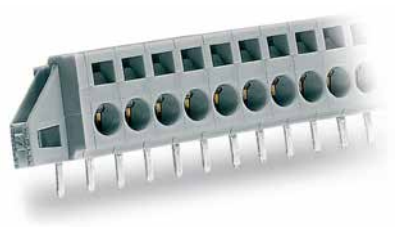

231-610/017-000

Pole number	Item No.	PU
2	231-602/017-000	100
3	231-603/017-000	50
4	231-604/017-000	50
5	231-605/017-000	50
6	231-606/017-000	50
7	231-607/017-000	50
8	231-608/017-000	50
9	231-609/017-000	25
10	231-610/017-000	25
11	231-611/017-000	25
12	231-612/017-000	25

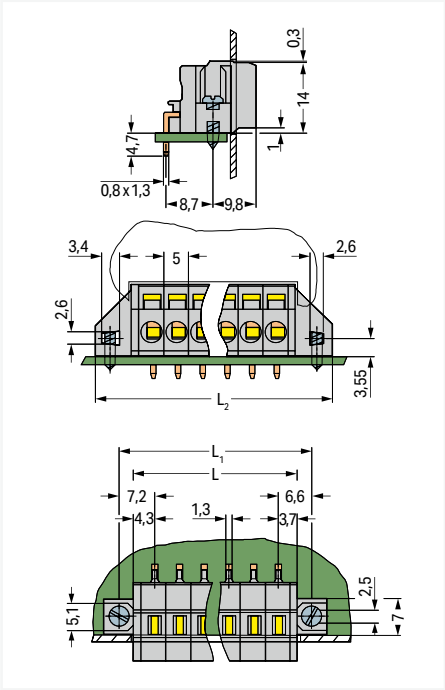

L = (pole no. x pin spacing) + 3 mm
L_1 = L + 5.8 mm
L_2 = L_1 + 6 mm

Housing wall thickness (max.): 1.5 mm ▸ for flush-mounting

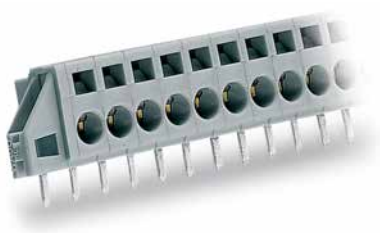

231-610/023-000

Pole number	Item No.	PU
2	231-602/023-000	100
3	231-603/023-000	50
4	231-604/023-000	50
5	231-605/023-000	50
6	231-606/023-000	50
7	231-607/023-000	50
8	231-608/023-000	50
9	231-609/023-000	25
10	231-610/023-000	25
11	231-611/023-000	25
12	231-612/023-000	25

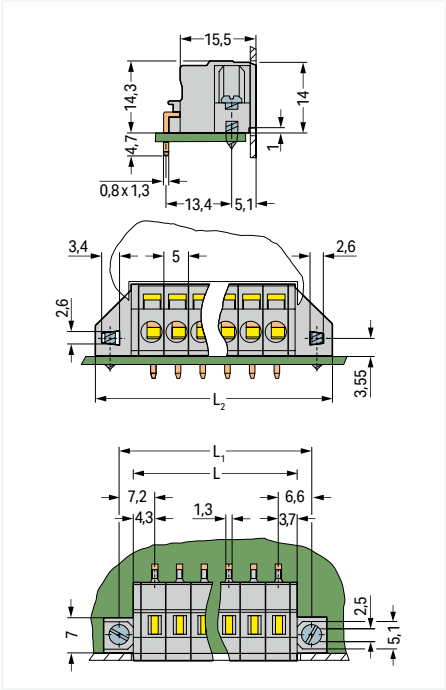

L = (pole no. x pin spacing) + 3 mm
L_1 = L + 5.8 mm
L_2 = L_1 + 6 mm
for plate thickness up to 1.5 mm

PU = packaging unit; SPU = subpackaging unit; Dimensions in mm

Variants:
- Other pole numbers
- Other colors
- Direct marking
- Versions without mounting flanges
- Other versions (or variants) can be requested from WAGO Sales or configured at https://configurator.wago.com/.

14

PCB terminal block ▸ 231 Series

CAGE CLAMP® ▸ Actuation type: Operating tool ▸ Mounting type: Mounting flange ▸ 2.5 mm² ▸ Pin spacing: 5.08 mm / 0.2 inches ▸ Terminal strip

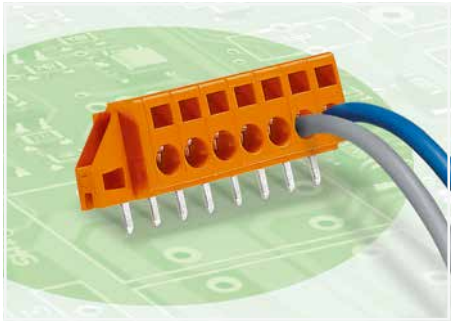

- Feedthrough PCB terminal strips with screwdriver-actuated CAGE CLAMP®
- With flanges for PCB or front-panel mounting – either flush with enclosure or protruding

Electrical data			
Pin spacing	**5.08 mm / 0.2 inches**		
Ratings per	**IEC/EN 60664-1**		
Overvoltage category	III	III	II
Pollution degree	3	2	2
Nominal voltage	320 V	320 V	630 V
Rated impulse withstand voltage	4 kV	4 kV	4 kV
Rated current	16 A	16 A	16 A
Approvals per	**UL 1059**		
Use group	B	C	D
Rated voltage	300 V	150 V	300 V
Rated current	15 A	15 A	10 A
Approvals per	**CSA**		
Use group	B	C	D
Rated voltage	300 V	150 V	300 V
Rated current	15 A	15 A	10 A

Connection Data	
Connection technology	CAGE CLAMP®
Strip length	8 … 9 mm / 0.31 … 0.35 inches
Conductor connection direction to PCB	0 °
Solid conductor	0.08 … 2.5 mm² / 28 … 14 AWG
Fine-stranded conductor	0.08 … 2.5 mm² / 28 … 14 AWG
Fine-stranded conductor; with insulated ferrule	0.25 … 1.5 mm²
Fine-stranded conductor; with uninsulated ferrule	0.25 … 2.5 mm²
Material data	
Material group	I
Insulation material (main housing)	Polyamide (PA66)
Flammability class per UL94	V0
Clamping spring material	Chrome-nickel spring steel (CrNi)
Contact material	Electrolytic copper (E_{Cu})
Contact Plating	Tin
Mechanical data	
Solder pin arrangement	over the entire terminal strip (in-line)
Number of solder pins per potential	1
Solder pin length	4.7 mm
Solder pin dimensions	0.8 x 1.3 mm
Drilled hole diameter	1.8 $^{(+0.1)}$ mm
Environmental requirements	
Limit temperature range	-60 … +105 °C
Processing temperature	-35 … +60 °C

Ferrule	Page 1081
Installation	Page 500, 1071
Marking	Page 1067
Tool	Page 1072

See technical section for further information

Approvals and corresponding ratings, visit www.wago.com

PCB terminal block ▸ 231 Series

CAGE CLAMP® ▸ Actuation type: Operating tool ▸ Mounting type: Mounting flange ▸ 2.5 mm² ▸ Pin spacing: 5.08 mm / 0.2 inches ▸ Terminal strip

Housing wall thickness (max.): 1.5 mm

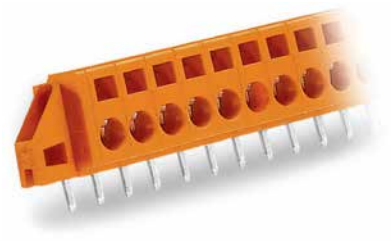

231-640/017-000

Pole number	Item No.	PU
2	231-632/017-000	100
3	231-633/017-000	50
4	231-634/017-000	50
5	231-635/017-000	50
6	231-636/017-000	50
7	231-637/017-000	50
8	231-638/017-000	50
9	231-639/017-000	25
10	231-640/017-000	25
11	231-641/017-000	25
12	231-642/017-000	25

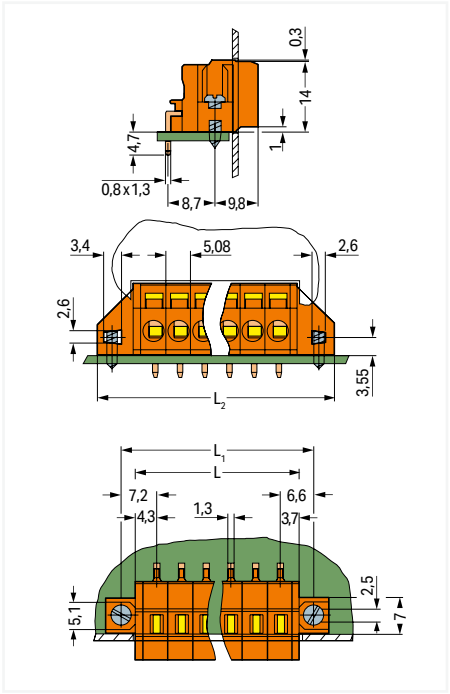

L = (pole no. x pin spacing) + 3 mm
L_1 = L + 5.8 mm
L_2 = L_1 + 6 mm

Housing wall thickness (max.): 1.5 mm ▸ for flush-mounting

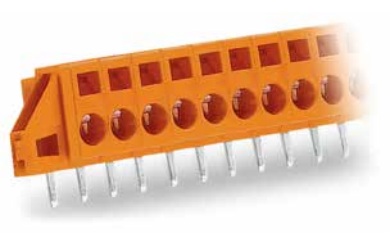

231-640/023-000

Pole number	Item No.	PU
2	231-632/023-000	100
3	231-633/023-000	50
4	231-634/023-000	50
5	231-635/023-000	50
6	231-636/023-000	50
7	231-637/023-000	50
8	231-638/023-000	50
9	231-639/023-000	25
10	231-640/023-000	25
11	231-641/023-000	25
12	231-642/023-000	25

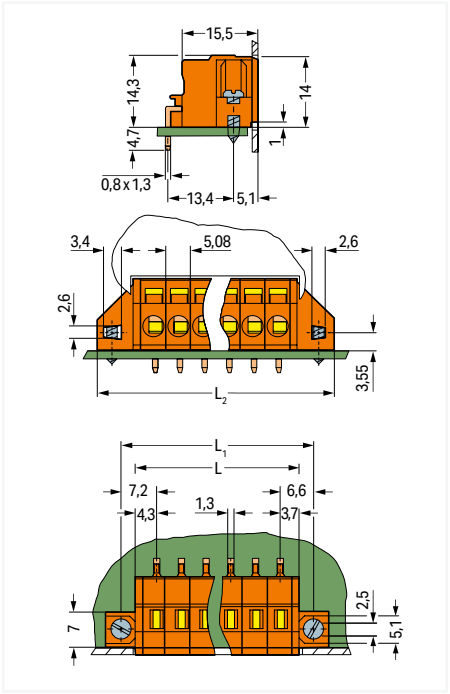

L = (pole no. x pin spacing) + 3 mm
L_1 = L + 5.8 mm
L_2 = L_1 + 6 mm
for plate thickness up to 1.5 mm

PU = packaging unit; SPU = subpackaging unit; Dimensions in mm

Variants:
- Other pole numbers
- Other colors
- Direct marking
- Versions without mounting flanges
- Other versions (or variants) can be requested from WAGO Sales or configured at https://configurator.wago.com/.

Feedthrough terminal block ▸ 731 Series

CAGE CLAMP® ▸ Wire-wrap pin ▸ Actuation type: Operating tool ▸ Mounting type: Mounting flange ▸ 2.5 mm² ▸ Pin spacing: 5 mm / 0.197 inches ▸ Terminal strip ▸ for flush-mounting

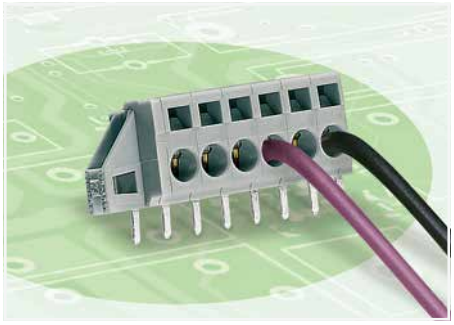

- Feedthrough PCB terminal strips with screwdriver-actuated CAGE CLAMP®
- With flanges for PCB or front-panel mounting – either flush with enclosure or protruding

Electrical data				
Pin spacing	**5 mm / 0.197 inches**			
Ratings per	**IEC/EN 60664-1**			
Overvoltage category	III	III	II	
Pollution degree	3	2	2	
Nominal voltage	320 V	320 V	630 V	
Rated impulse withstand voltage	4 kV	4 kV	4 kV	
Rated current	5 A	5 A	5 A	
Approvals per	**UL 1059**			
Use group	B	C	D	
Rated voltage	300 V	150 V	300 V	
Rated current	5 A	5 A	5 A	
Approvals per	**CSA**			
Use group	B	C	D	
Rated voltage	300 V	-	-	
Rated current	5 A	-	-	

Connection Data	
Connection technology	CAGE CLAMP®
Strip length	8 … 9 mm / 0.31 … 0.35 inches
Solid conductor	0.08 … 2.5 mm² / 28 … 14 AWG
Fine-stranded conductor	0.08 … 2.5 mm² / 28 … 14 AWG
Fine-stranded conductor; with insulated ferrule	0.25 … 1.5 mm²
Fine-stranded conductor; with uninsulated ferrule	0.25 … 2.5 mm²
Connection technology	Wire-wrap pin

Material data	
Material group	I
Insulation material (main housing)	Polyamide (PA66)
Flammability class per UL94	V0
Clamping spring material	Chrome-nickel spring steel (CrNi)
Contact material	Electrolytic copper (E_{Cu})
Contact Plating	Tin

Environmental requirements	
Limit temperature range	-60 … +105 °C
Processing temperature	-35 … +60 °C

14

Ferrule	Page 1081
Installation	Page 500, 1071
Marking	Page 1067
Tool	Page 1072

See technical section for further information

Approvals and corresponding ratings, visit www.wago.com

Feedthrough terminal block ▸ 731 Series

CAGE CLAMP® ▸ Wire-wrap pin ▸ Actuation type: Operating tool ▸ Mounting type: Mounting flange ▸ 2.5 mm² ▸ Pin spacing: 5 mm / 0.197 inches ▸ Terminal strip ▸ for flush-mounting

Housing wall thickness (max.): 1.5 mm

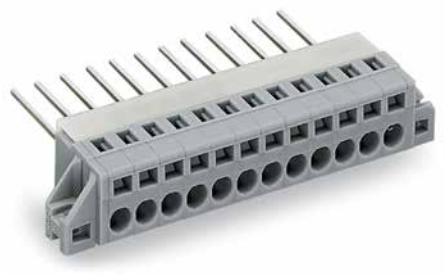

731-142/048-000

Pole number	Item No.	PU
2	731-132	50
3	731-133	50
4	731-134	25
5	731-135	25
6	731-136/048-000	25
7	731-137/048-000	25
8	731-138/048-000	25
9	731-139/048-000	25
10	731-140/048-000	10
11	731-141/048-000	10
12	731-142/048-000	10

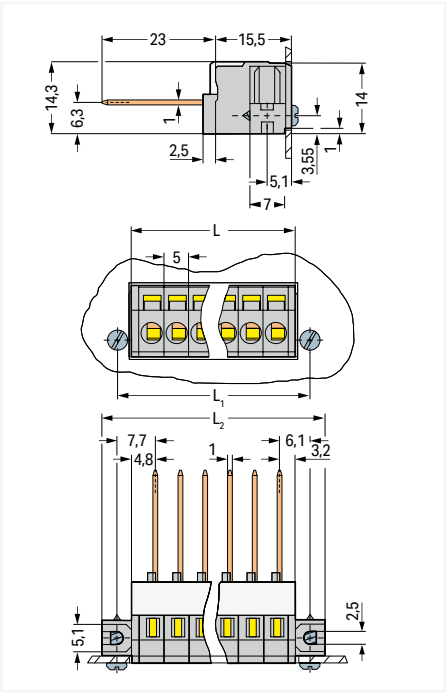

L = (pole no. x pin spacing) + 3 mm
L_1 = L + 5.8 mm
L_2 = L_1 + 6 mm
for plate thickness up to 1.5 mm

PU = packaging unit; SPU = subpackaging unit; Dimensions in mm

Variants:
- Other pole numbers
- Other colors
- Direct marking
- Versions without mounting flanges
- Other versions (or variants) can be requested from WAGO Sales or configured at https://configurator.wago.com/.

Feedthrough terminal block ▸ 731 Series

CAGE CLAMP® ▸ Wire-wrap pin ▸ Actuation type: Operating tool ▸ Mounting type: Mounting flange ▸ 2.5 mm² ▸ Pin spacing: 5.08 mm / 0.2 inches ▸ Terminal strip ▸ for flush-mounting

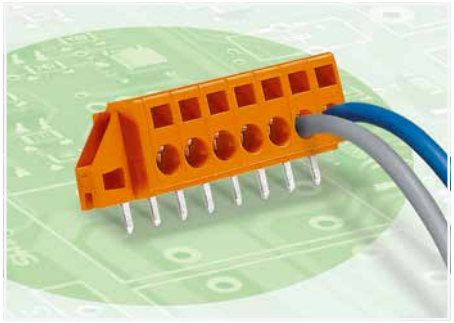

- Feedthrough PCB terminal strips with screwdriver-actuated CAGE CLAMP®
- With flanges for PCB or front-panel mounting – either flush with enclosure or protruding

Electrical data			
Pin spacing	**5.08 mm / 0.2 inches**		
Ratings per	**IEC/EN 60664-1**		
Overvoltage category	III	III	II
Pollution degree	3	2	2
Nominal voltage	320 V	320 V	630 V
Rated impulse withstand voltage	4 kV	4 kV	4 kV
Rated current	5 A	5 A	5 A
Approvals per	**UL 1059**		
Use group	B	C	D
Rated voltage	300 V	150 V	300 V
Rated current	5 A	5 A	5 A
Approvals per	**CSA**		
Use group	B	C	D
Rated voltage	300 V	-	-
Rated current	5 A	-	-

Connection Data	
Connection technology	CAGE CLAMP®
Strip length	8 … 9 mm / 0.31 … 0.35 inches
Solid conductor	0.08 … 2.5 mm² / 28 … 14 AWG
Fine-stranded conductor	0.08 … 2.5 mm² / 28 … 14 AWG
Fine-stranded conductor; with insulated ferrule	0.25 … 1.5 mm²
Fine-stranded conductor; with uninsulated ferrule	0.25 … 2.5 mm²
Connection technology	Wire-wrap pin

Material data	
Material group	I
Insulation material (main housing)	Polyamide (PA66)
Flammability class per UL94	V0
Clamping spring material	Chrome-nickel spring steel (CrNi)
Contact material	Electrolytic copper (E_{Cu})
Contact Plating	Tin

Environmental requirements	
Limit temperature range	-60 … +105 °C
Processing temperature	-35 … +60 °C

14

Ferrule	Page 1081
Installation	Page 500, 1071
Marking	Page 1067
Tool	Page 1072

See technical section for further information

Approvals and corresponding ratings, visit www.wago.com

Feedthrough terminal block ▸ 731 Series

CAGE CLAMP® ▸ Wire-wrap pin ▸ Actuation type: Operating tool ▸ Mounting type: Mounting flange ▸ 2.5 mm² ▸ Pin spacing: 5.08 mm / 0.2 inches ▸ Terminal strip ▸ for flush-mounting

Housing wall thickness (max.): 1.5 mm

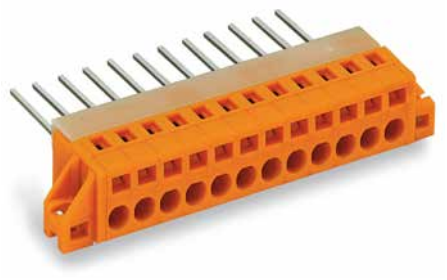

731-172/048-000

Pole number	Item No.	PU
2	**731-162**	50
3	**731-163**	50
4	**731-164**	25
5	**731-165**	25
6	**731-166/048-000**	25
7	**731-167/048-000**	25
8	**731-168/048-000**	25
9	**731-169/048-000**	25
10	**731-170/048-000**	10
11	**731-171/048-000**	10
12	**731-172/048-000**	25

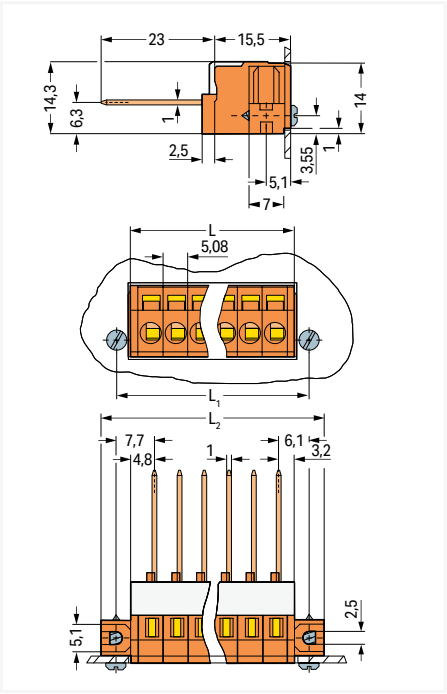

L = (pole no. x pin spacing) + 3 mm
L_1 = L + 5.8 mm
L_2 = L_1 + 6 mm
for plate thickness up to 1.5 mm

PU = packaging unit; SPU = subpackaging unit; Dimensions in mm

Variants:
- Other pole numbers
- Other colors
- Direct marking
- Versions without mounting flanges
- Other versions (or variants) can be requested from WAGO Sales or configured at https://configurator.wago.com/.

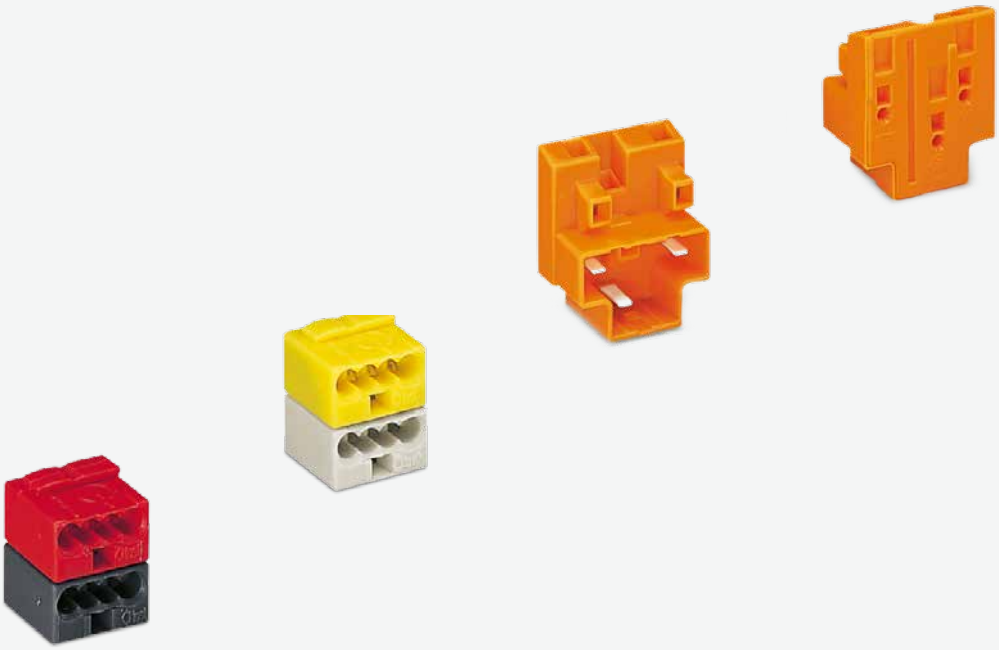

WAGO Specialty Connectors

WAGO Specialty Connectors







	Series	Page
Female Connector ▸ Pole No.: 3 ▸ IDC ▸ 0.75 … 1.5 mm² „f-st"	730	1040
Male Connector ▸ Pole No.: 3 ▸ CAGE CLAMP® ▸ Actuation type: Operating tool ▸ 0.08 … 2.5 mm² (18 … 16 AWG)		1042
Female Connector ▸ Pole No.: 6 ▸ IDC ▸ 0.75 … 1.5 mm² „f-st"		1044
Male Connector ▸ Pole No.: 6 ▸ CAGE CLAMP® ▸ Actuation type: Operating tool ▸ 0.08 … 2.5 mm² (18 … 16 AWG)		1046
4-Conductor Modular PCB Connector ▸ for KNX/EIB Bus Coupler Units ▸ PUSH WIRE®	243	1048
Accessories and Tools		1063

Wire-Tap Branch Connectors, 3-Pole
730 Series
Description and Installation

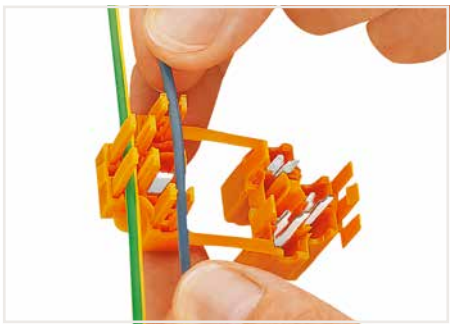

Press conductor into strain relief fingers.

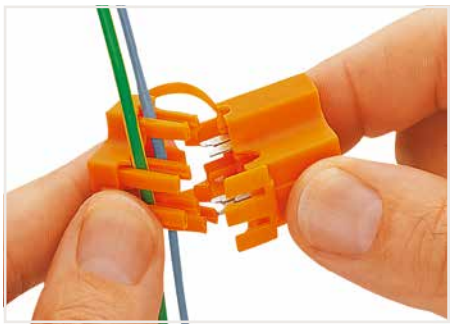

Place upper and lower part of the socket into pre-locking position.

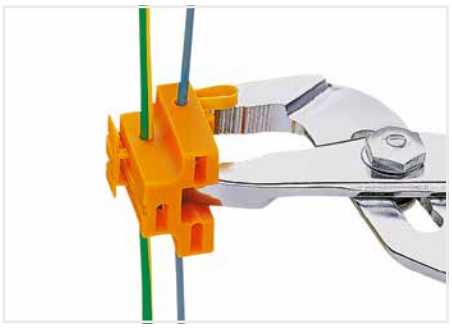

Press into final position using pliers.

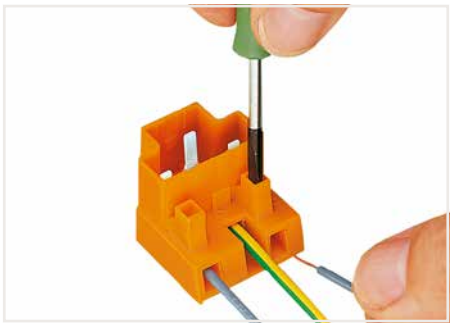

Insert conductors via screwdriver – 3-pole plug equipped with CAGE CLAMP®.

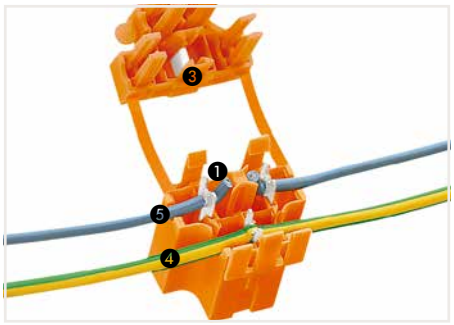

Three-pole socket includes:
1. IDC
2. CAGE CLAMP®
3. Isolation blade
4. IDC contacted ground conductor
5. Cut and IDC contacted "live" conductor
   contacted "live" conductor

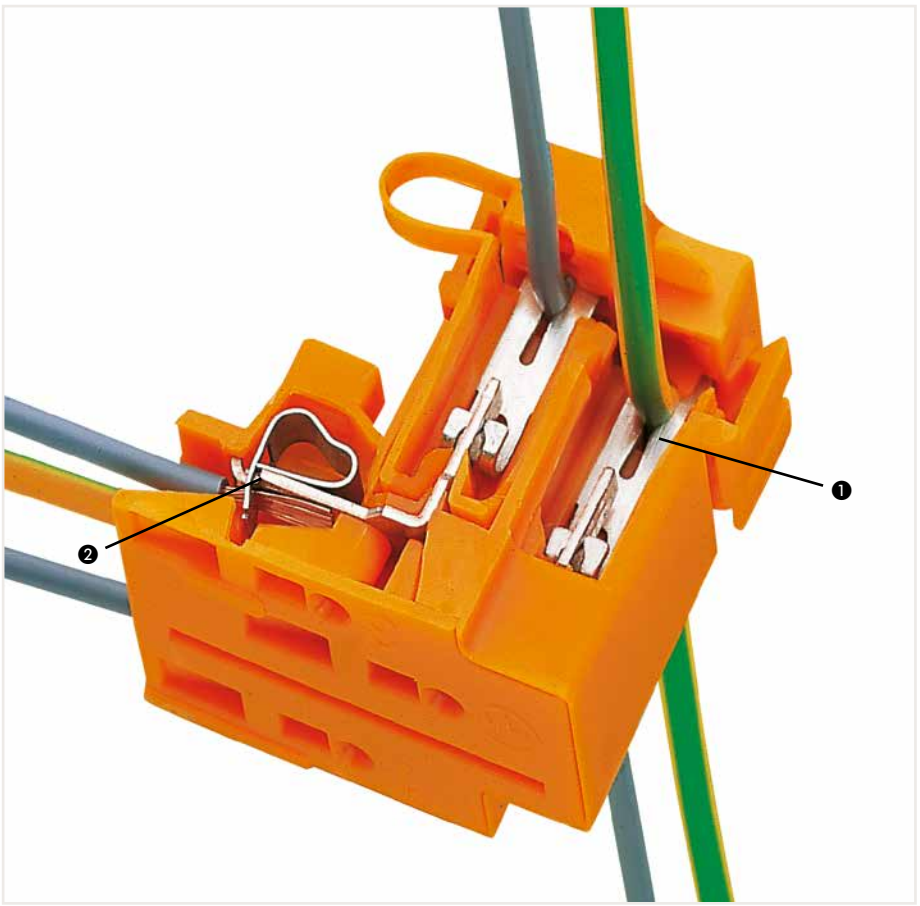

730 Series, 3-pole

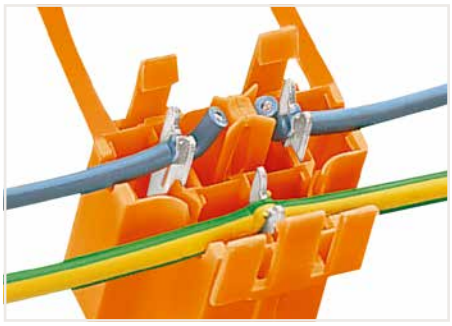

Snapping socket halves together will automatically cut and terminate a "live" conductor without stripping – enables switching applications (e.g., door switches).

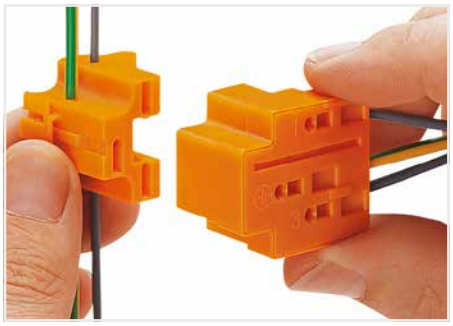

Insert plug into socket.

Wire-Tap Branch Connectors, 6-Pole
730 Series
Description and Installation

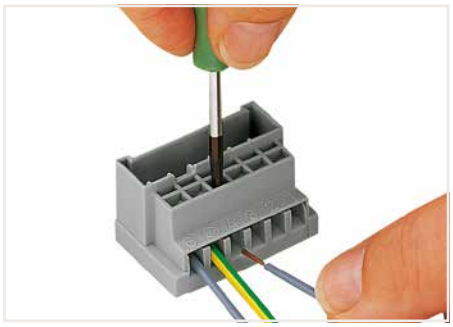

Insert conductors via screwdriver – 6-pole plug equipped with CAGE CLAMP®.

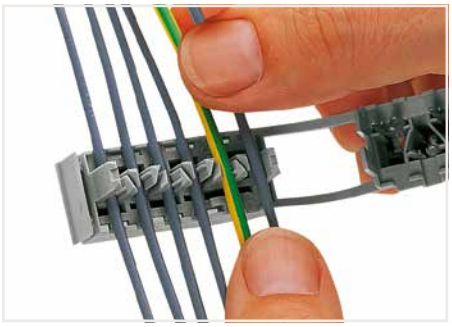

Press conductors into strain relief fingers.

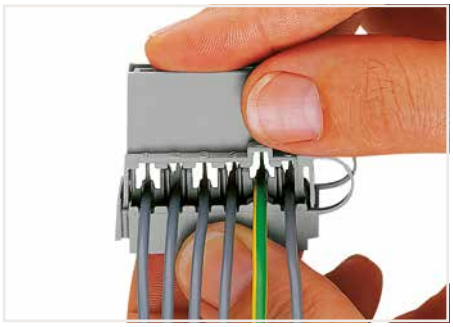

Place upper and lower part of the socket into pre-locking position.



730 Series



Press into final position using pliers.

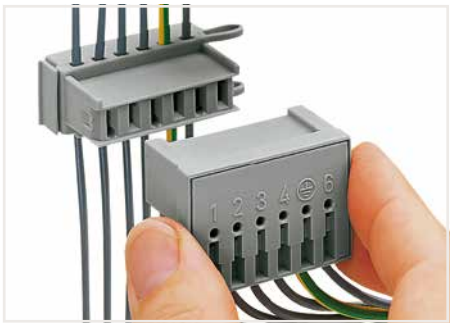

Insert plug into socket.



Marking via side marker carrier.

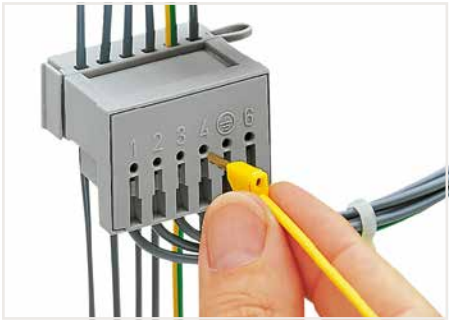

Testing via 2.3 mm Ø test plug.

Socket ▸ 730 Series

Pole number: 3 ▸ IDC connection ▸ Color: orange

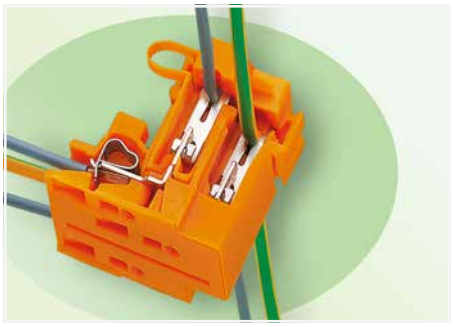

- Sockets with IDC for tapping individual conductors without stripping
- Three-pole sockets automatically cut "live" conductors (e.g., door switches in elevator shafts)
- Sockets available with additional mounting flanges

Electrical data				
Ratings per		**IEC/EN 60664-1**		
Overvoltage category	III	III	II	
Pollution degree	3	2	2	
Nominal voltage	500 V	630 V	1000 V	
Rated impulse withstand voltage	6 kV	6 kV	6 kV	
Rated current	10 A	10 A	10 A	
Approvals per		**UL 1059**		
Use group	B	C	D	
Rated voltage	-	600 V	-	
Rated current	-	10 A	-	
Approvals per		**CSA**		
Use group	B	C	D	
Rated voltage	-	600 V	-	
Rated current	-	10 A	-	
Connection Data				
Connection technology	IDC connection			
Fine-stranded conductor	0.75 … 1.5 mm² / 18 … 16 AWG			
Material data				
Material group	I			
Insulation material (main housing)	Polyamide (PA66)			
Flammability class per UL94	V0			
Clamping spring material	Chrome-nickel spring steel (CrNi)			
Contact material	Brass			
Contact Plating	Tin			
Environmental requirements				
Limit temperature range	-60 … +85 °C			

15

Test and measurement Page 1088
Tool Page 1072
See technical section for further information
Approvals and corresponding ratings, visit www.wago.com

Socket ▸ 730 Series

Pole number: 3 ▸ IDC connection ▸ Color: orange

Mounting type: Mounting flange

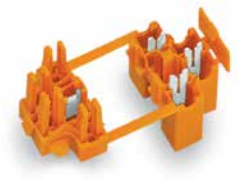



730-103

Color	Pole number	Item No.	PU
orange	3	730-103	50

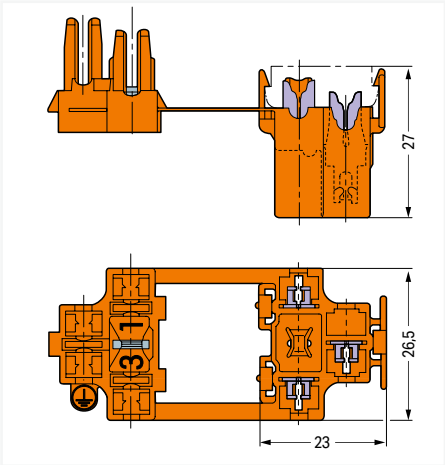

730-123

Color	Pole number	Item No.	PU
orange	3	730-123	50

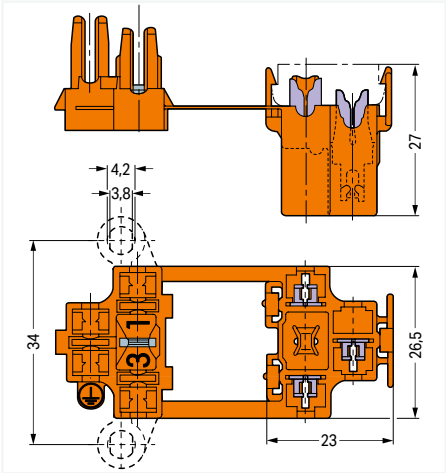

PU = packaging unit; SPU = subpackaging unit; Dimensions in mm

15

Male connector ▸ 730 Series

Pole number: 3 ▸ CAGE CLAMP® ▸ Actuation type: Operating tool ▸ 2.5 mm² ▸ Color: orange

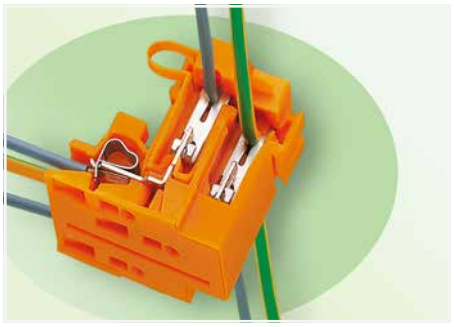

- Plugs with CAGE CLAMP® for the universal connection of all conductor types

Electrical data			
Ratings per	**IEC/EN 60664-1**		
Overvoltage category	III	III	II
Pollution degree	3	2	2
Nominal voltage	500 V	630 V	1000 V
Rated impulse withstand voltage	6 kV	6 kV	6 kV
Rated current	10 A	10 A	10 A
Approvals per	**UL 1059**		
Use group	B	C	D
Rated voltage	-	600 V	-
Rated current	-	10 A	-
Approvals per	**CSA**		
Use group	B	C	D
Rated voltage	-	600 V	-
Rated current	-	10 A	-

Connection Data	
Connection technology	CAGE CLAMP®
Strip length	8 … 9 mm / 0.31 … 0.35 inches
Solid conductor	0.08 … 2.5 mm² / 28 … 14 AWG
Fine-stranded conductor	0.08 … 2.5 mm² / 28 … 14 AWG
Fine-stranded conductor; with insulated ferrule	0.25 … 1.5 mm²
Fine-stranded conductor; with uninsulated ferrule	0.25 … 2.5 mm²

Material data	
Material group	I
Insulation material (main housing)	Polyamide (PA66)
Flammability class per UL94	V0
Clamping spring material	Chrome-nickel spring steel (CrNi)
Contact material	Electrolytic copper (E_{Cu})
Contact Plating	Tin

Environmental requirements	
Limit temperature range	-60 … +85 °C

15

Test and measurement Page 1088
Tool Page 1072
See technical section for further information
Approvals and corresponding ratings, visit www.wago.com

Male connector ▸ 730 Series

Pole number: 3 ▸ CAGE CLAMP® ▸ Actuation type: Operating tool ▸ 2.5 mm² ▸ Color: orange



730-113

Color	Pole number	Item No.	PU
orange	3	730-113	50

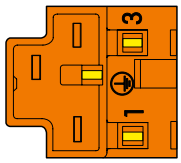

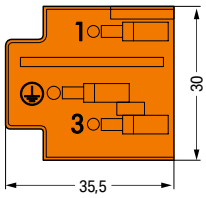

PU = packaging unit; SPU = subpackaging unit; Dimensions in mm

Socket ▸ 730 Series

Pole number: 6 ▸ IDC connection ▸ Color: gray

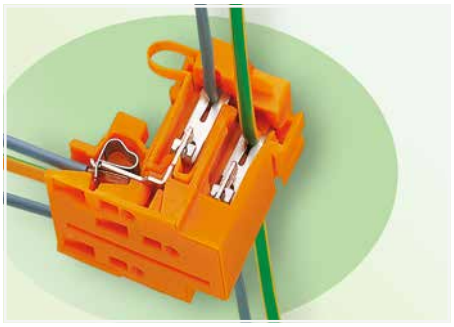

- Sockets with IDC for tapping individual conductors without stripping
- Three-pole sockets automatically cut "live" conductors (e.g., door switches in elevator shafts)
- Sockets available with additional mounting flanges

Electrical data				
Ratings per		**IEC/EN 60664-1**		
Overvoltage category	III	III	II	
Pollution degree	3	2	2	
Nominal voltage	500 V	630 V	1000 V	
Rated impulse withstand voltage	6 kV	6 kV	6 kV	
Rated current	10 A	10 A	10 A	
Approvals per		**UL 1059**		
Use group	B	C	D	
Rated voltage	-	600 V	-	
Rated current	-	10 A	-	
Approvals per		**CSA**		
Use group	B	C	D	
Rated voltage	-	600 V	-	
Rated current	-	10 A	-	
Connection Data				
Connection technology	IDC connection			
Fine-stranded conductor	0.75 … 1.5 mm² / 18 … 16 AWG			
Material data				
Material group	I			
Insulation material (main housing)	Polyamide (PA66)			
Flammability class per UL94	V0			
Clamping spring material	Chrome-nickel spring steel (CrNi)			
Contact material	Brass			
Contact Plating	Tin			
Environmental requirements				
Limit temperature range	-60 … +85 °C			

15

Test and measurement Page 1088
Tool Page 1072
See technical section for further information
Approvals and corresponding ratings, visit www.wago.com

Socket ▸ 730 Series

Pole number: 6 ▸ IDC connection ▸ Color: gray

Mounting type: Mounting flange

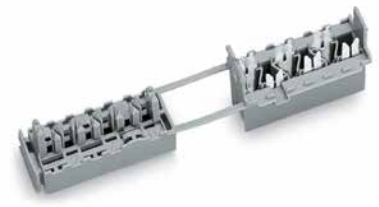

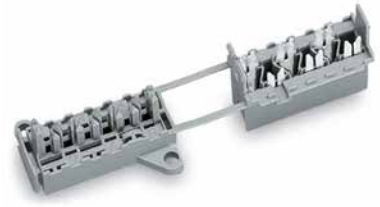

730-106

Color	Pole number	Item No.	PU
gray	6	730-106	50

730-126

Color	Pole number	Item No.	PU
gray	6	730-126	50

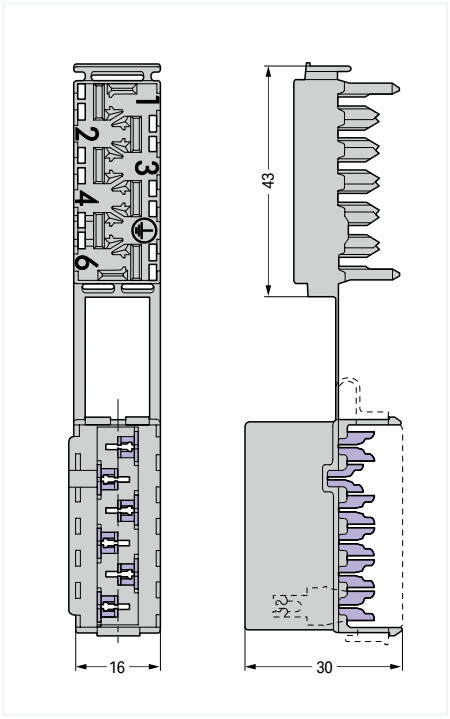

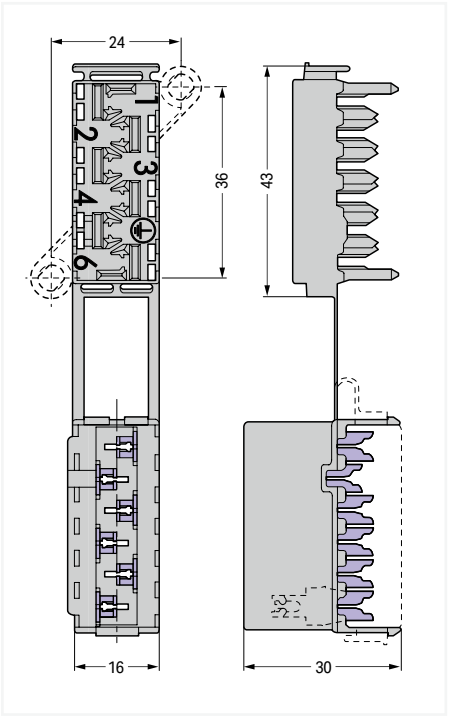

PU = packaging unit; SPU = subpackaging unit; Dimensions in mm

Male connector ▸ 730 Series

Pole number: 6 ▸ CAGE CLAMP® ▸ Actuation type: Operating tool ▸ 2.5 mm² ▸ Color: gray

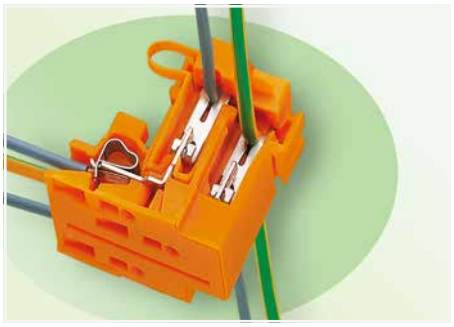

- Plugs with CAGE CLAMP® for the universal connection of all conductor types

Electrical data			
Ratings per	**IEC/EN 60664-1**		
Overvoltage category	III	III	II
Pollution degree	3	2	2
Nominal voltage	500 V	630 V	1000 V
Rated impulse withstand voltage	6 kV	6 kV	6 kV
Rated current	10 A	10 A	10 A
Approvals per	**UL 1059**		
Use group	B	C	D
Rated voltage	-	600 V	-
Rated current	-	10 A	-
Approvals per	**CSA**		
Use group	B	C	D
Rated voltage	-	600 V	-
Rated current	-	10 A	-

Connection Data	
Connection technology	CAGE CLAMP®
Strip length	8 … 9 mm / 0.31 … 0.35 inches
Solid conductor	0.08 … 2.5 mm² / 28 … 14 AWG
Fine-stranded conductor	0.08 … 2.5 mm² / 28 … 14 AWG
Fine-stranded conductor; with insulated ferrule	0.25 … 1.5 mm²
Fine-stranded conductor; with uninsulated ferrule	0.25 … 2.5 mm²

Material data	
Material group	I
Insulation material (main housing)	Polyamide (PA66)
Flammability class per UL94	V0
Clamping spring material	Chrome-nickel spring steel (CrNi)
Contact material	Electrolytic copper (E_{Cu})
Contact Plating	Tin

Environmental requirements	
Limit temperature range	-60 … +85 °C

15

Test and measurement Page 1088
Tool Page 1072
See technical section for further information
Approvals and corresponding ratings, visit www.wago.com

Male connector ▸ 730 Series

Pole number: 6 ▸ CAGE CLAMP® ▸ Actuation type: Operating tool ▸ 2.5 mm² ▸ Color: gray



730-116

Color	Pole number	Item No.	PU
gray	6	730-116	50

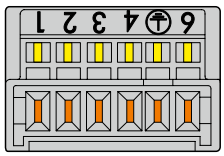

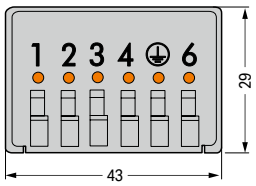

PU = packaging unit; SPU = subpackaging unit; Dimensions in mm

4-conductor modular PCB connector ▸ 243 Series
for KNX/EIB bus coupler units ▸ PUSH WIRE®



- Compact, 4-conductor KNX/EIB connectors with PUSH WIRE® connection
- Push-in termination of solid conductors
- Four-conductor entries allow devices to be replaced without disrupting the KNX/EIB bus connection

Electrical data				
Ratings per	**IEC/EN 60664-1**			
Overvoltage category	III	III	II	
Pollution degree	3	2	2	
Nominal voltage	250 V	320 V	630 V	
Rated impulse withstand voltage	4 kV	4 kV	4 kV	
Rated current	6 A	6 A	6 A	

Connection Data	
Connection technology	PUSH WIRE®
Strip length	5 … 6 mm / 0.2 … 0.24 inches
Solid conductor	22 … 20 AWG
Conductor diameter	0.6 … 0.8 mm / 22 … 20 AWG
Conductor diameter (note)	When using different conductor diameters
Solid conductor	18 AWG
Conductor diameter	1 mm / 18 AWG
Conductor diameter (note)	When using identical conductor diameters

Material data	
Material group	I
Insulation material (main housing)	Polyamide (PA66)
Flammability class per UL94	V0
Clamping spring material	Chrome-nickel spring steel (CrNi)
Contact material	Electrolytic copper (E_{Cu})
Contact Plating	Tin

Environmental requirements	
Limit temperature range	-60 … +105 °C
Continuous operating temperature	-60 °C

Marking Page 1067

See technical section for further information

Approvals and corresponding ratings, visit www.wago.com

4-conductor modular PCB connector ▸ 243 Series
for KNX/EIB bus coupler units ▸ PUSH WIRE®



243-211

Color	Item No.	PU (SPU)
◯ light gray/yellow	**243-212**	500 (50)
◯ dark gray/red	**243-211**	500 (50)

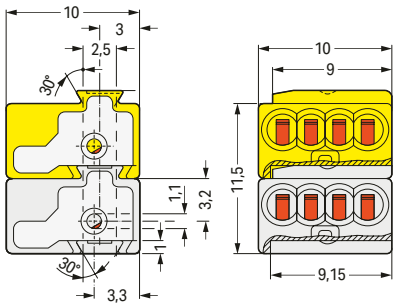



The KNX bus system is the intelligent solution to simplify existing building installation control. Instead of many different conventional wiring styles, the KNX bus system offers a flexible general solution for every application in the field of switching, controlling, measuring, monitoring and signaling.

The decentralized KNX system consists of active and intelligent modules. The system can be customized using the different KNX components.

For example, pairs of sensors/actuators control:

– lighting
– window blinds
– heating/ventilation
– energy management systems
– information display/transmission

Command data is transmitted via twisted-pair bus cable, which is connected to the sensors and actuators by WAGO PUSH WIRE® connectors.

The sensors transmit the commands as "telegrams" to the actuators via the bus. Once the information is gathered, the commands are performed by the actuators. An address is assigned to each "telegram" so that only a defined transmitter is allowed to activate a specified receiver. The address assignment is done using a programming tool.

The bus system is divided into "lines" (segments). The bus lines can be laid out either in a line, star or tree topology. WAGO's PUSH WIRE® connectors connect the different branches to one another in the junction boxes.

New components can be easily added to the existing bus, permitting future expansion of the installation. When future reallocation of rooms, floors or buildings is required, the installation remains unchanged, so that only the sensors must be reassigned to the actuators.

PU = packaging unit; SPU = subpackaging unit; Dimensions in mm



WAGO Empty Housings

WAGO Empty Housings

		Series	Page
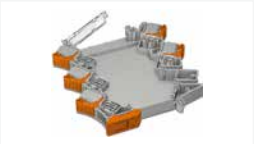	Modular Empty Housings ▸ Housing Width: 12.5 mm and 22.5 mm ▸ for DIN-Rail	2857	1054
	Stripboards ▸ for Modular Empty Housings	2857	1056
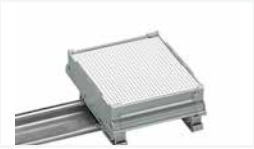	Mount PCB Carriers ▸ for DIN-Rail	288	1058
	Accessories and Tools		1063

Modular Empty Housings
Overview and Configuration
2857 Series

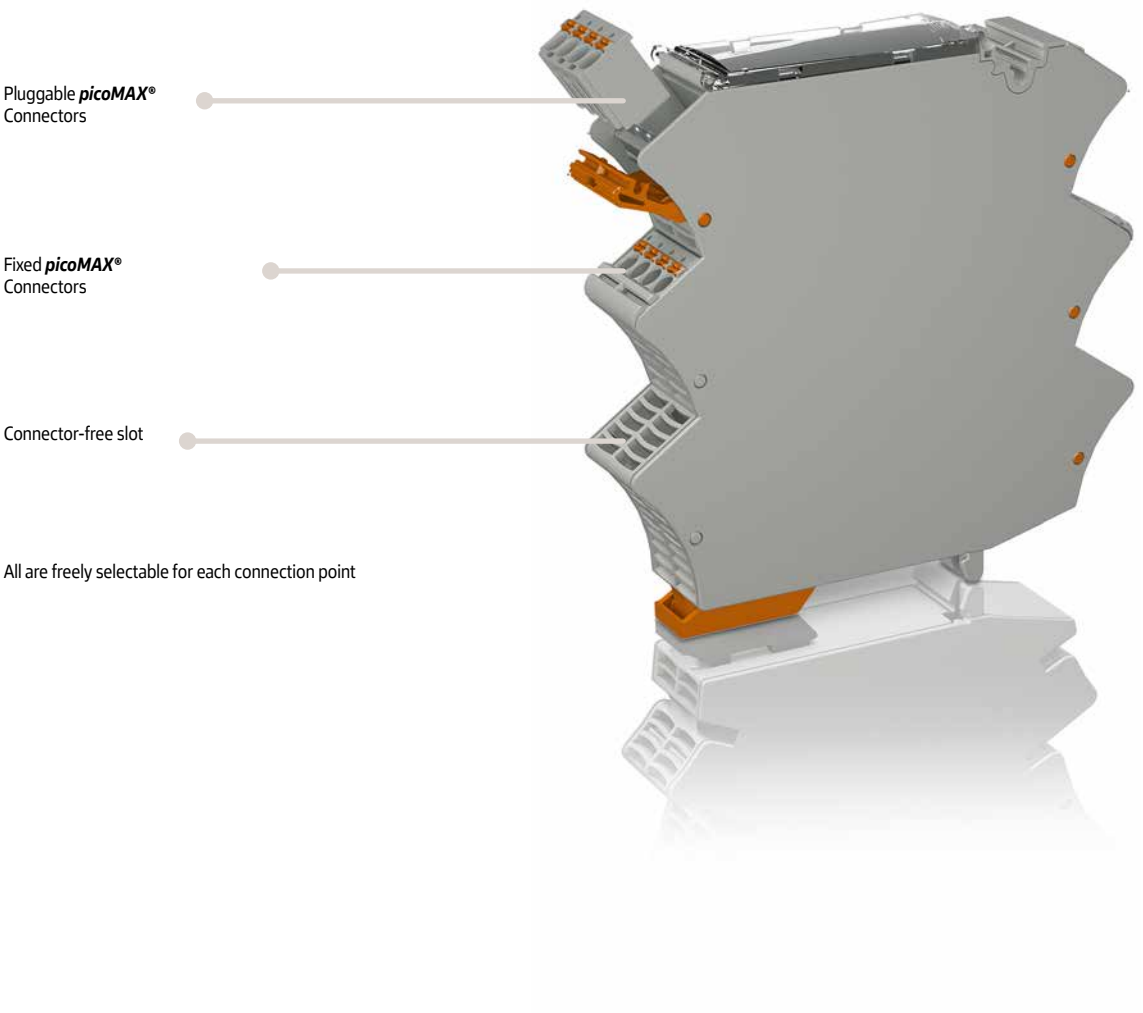

Supplied as a pre-assembled unit:

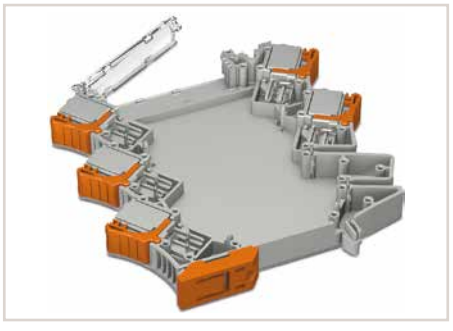

1. Pre-assembled unit

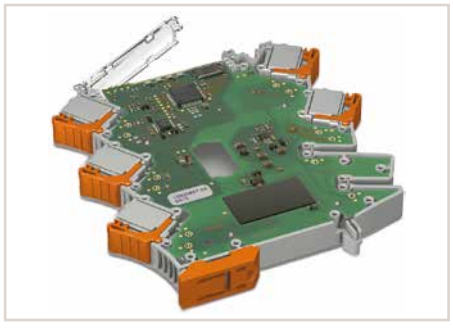

2. Insert and solder the PCB.

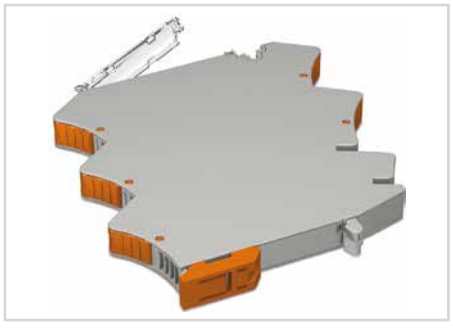

3. Snap on the side wall.

Housing configuration:

Housing width: 12.5 mm	 2857-101	 2857-102	 2857-103	–
Housing width: 22.5 mm	 2857-121	 2857-122	 2857-123	 2857-124
Connection levels	2-2	3-2	3-3	1-1
Jumper slots	2-2	0-2	0-0	2-2

Mixed configuration (fixed/removable/empty slot) upon request!

Example of connection level and jumper slot assignment:

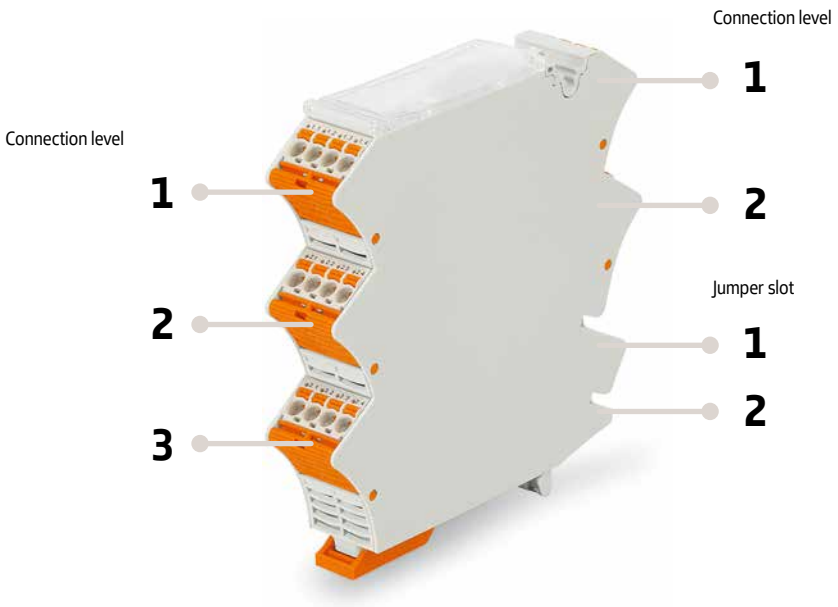

Connection levels	3-2
Jumper slots	0-2

Modular Empty Housings ▸ for DIN-35 Rail
2857 Series



- *picoMAX*® female connectors; with coding keys; 4-pole
- Pre-assembled unit
- Flexible conductor termination
- Customizable connection levels
- Various marking options available
- Sealable, transparent cover
- Commoning via 859-402 Jumpers

Electrical Data (***picoMAX***® 5.0 Female Connector)				
Ratings per	IEC/EN 60664-1			
Overvoltage category	III	III	II	
Pollution degree	3	2	2	
Rated voltage	250 V	320 V	630 V	
Rated impulse voltage	4 kV	4 kV	4 kV	
Rated current	16 A	16 A	16 A	
Approvals per	UL 1059			
Use Group	B	C	D	
Rated voltage	300 V	-	300 V	
Rated current	15 A	-	10 A	

Connection Data	
Connection technology	Push-in CAGE CLAMP®
Strip length	9 … 10 mm / 0.35 … 0.39 inch
Conductor entry direction to PCB	45 °
Solid conductor	0.2 … 2.5 mm² / 24 … 12 AWG
Fine-stranded conductor	0.2 … 2.5 mm² / 24 … 12 AWG
Fine-stranded conductor with ferrule with plastic collar	0.2 … 1.5 mm²
Fine-stranded conductor with ferrule without plastic collar	0.2 … 2.5 mm²

Material data (***picoMAX***® 5.0 Female Connector)	
Material group	I
Insulation material	Polyphthalamide (PPA GF)
Flammability class per UL94	V0
Limit temperature range	–60 … +100 °C
Contact material	Electrolytic copper (E_{CU})
Clamping spring material	Chrome nickel spring steel (CrNi)
Contact plating	Tin-plated

Material Data (Empty Housing)	
Housing material	PC
Flammability class	V0
Ambient operating temperature	–40 … +70 °C
Storage temperature	–40 … +85 °C

16

Ferrule	Page
Jumper	Page
Marking	Page
System enclosure	Page
Tool	Page

See technical section for further information

Approvals and corresponding ratings, visit www.wago.com

Modular Empty Housings ▸ for DIN-35 Rail
2857 Series



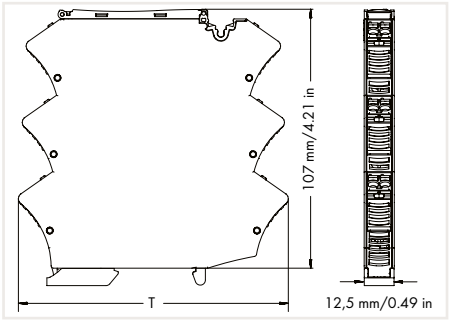

12.5 mm wide housing		
Description	**Item No.**	PU
2-2 connection levels; 2-2 jumper slots	**2857-101**	10
3-2 connection levels; 0-2 jumper slots	**2857-102**	10
3-3 connection levels; 0-0 jumper slots	**2857-103**	10

Technical Data: Empty Housing	
Dimensions (mm) W x H x D	12.5 x 107 x 108 (2857-101) 12.5 x 107 x 110 (2857-102) 12.5 x 107 x 112 (2857-103) Height from upper-edge of DIN-35 rail
Power loss	2 W

Accessories		
Description	**Item No.**	PU
Coding pin carrier	**2092-1610**	1
Jumpers	**859-402**	1



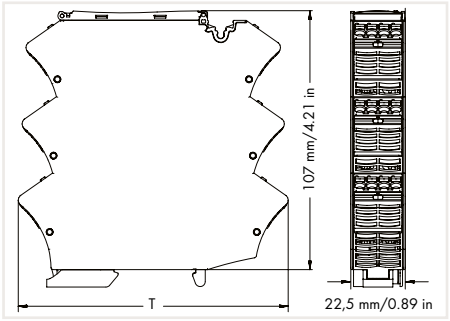

22.5 mm wide housing		
Description	**Item No.**	PU
2-2 connection levels; 2-2 jumper slots	**2857-121**	5
3-2 connection levels; 0-2 jumper slots	**2857-122**	5
3-3 connection levels; 0-0 jumper slots	**2857-123**	5
1-1 connection levels; 2-2 jumper slots	**2857-124**	5

Technical Data: Empty Housing	
Dimensions (mm) W x H x D	22.5 x 107 x 108 (2857-121) 22.5 x 107 x 110 (2857-122) 22.5 x 107 x 112 (2857-123) 22.5 x 107 x 105 (2857-124) Height from upper-edge of DIN-35 rail
Power loss	3 W

Accessories		
Description	**Item No.**	PU
Coding pin carrier	**2092-1610**	1
Jumpers	**859-402**	1

PU = Packaging Unit; SPU = Subpackaging Unit; Dimensions in mm

Stripboards ▸ for Installation in Empty Housings ▸ for DIN-35 Rail 2857 Series

Connection levels: 2-2; Jumper slots: 2-2

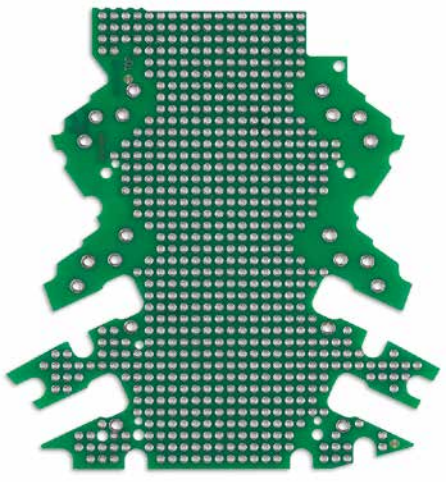

	Item No.	PU
	2857-191/3140-000	5

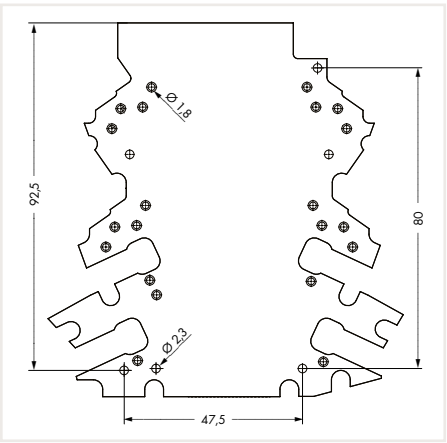

Connection levels: 3-2; Jumper slots: 0-2

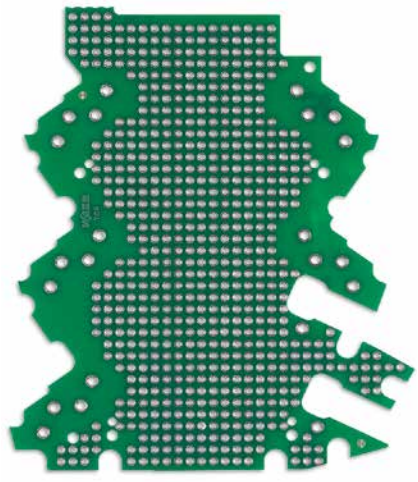

	Item No.	PU
	2857-192/3140-000	5

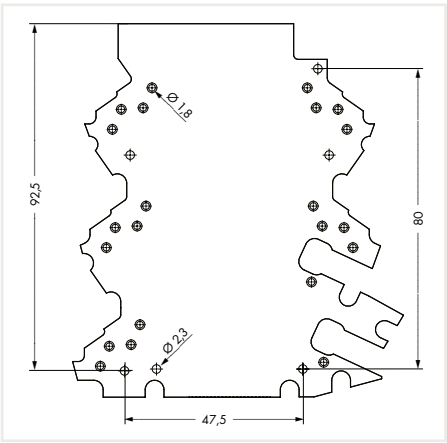

PU = Packaging Unit; SPU = Subpackaging Unit; Dimensions in mm

Stripboards ▸ for Installation in Empty Housings ▸ for DIN-35 Rail
2857 Series

Connection levels: 3-3; Jumper slots: 0-0

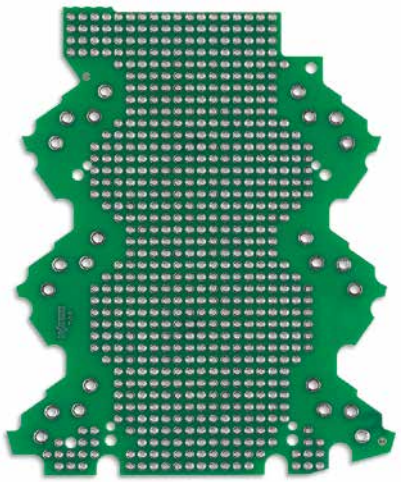

	Item No.	PU
	2857-193/3140-000	5

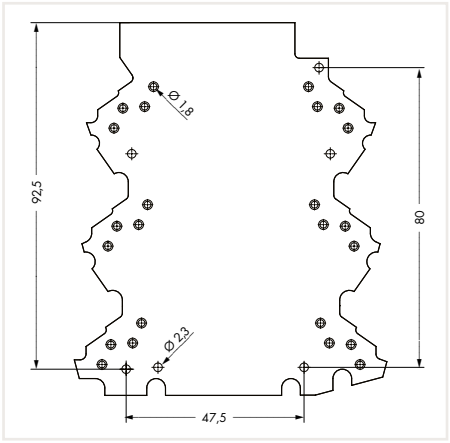

Connection levels: 1-1; Jumper slots: 2-2

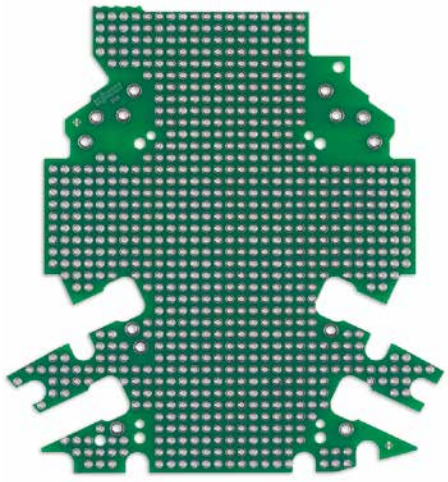

	Item No.	PU
	2857-194/3140-000	5

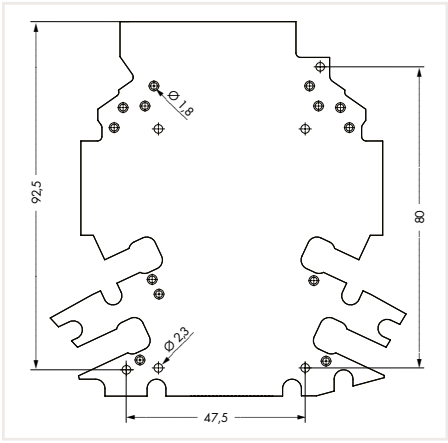

PU = Packaging Unit; SPU = Subpackaging Unit; Dimensions in mm

DIN-Rail Mount PCB Carriers
288 Series

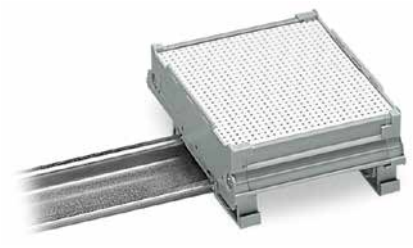

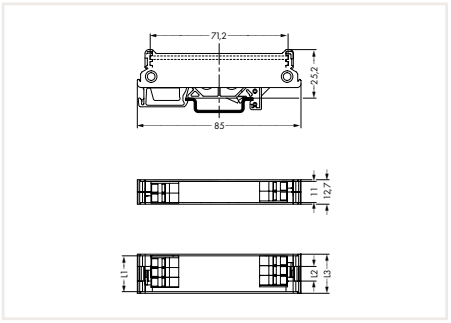

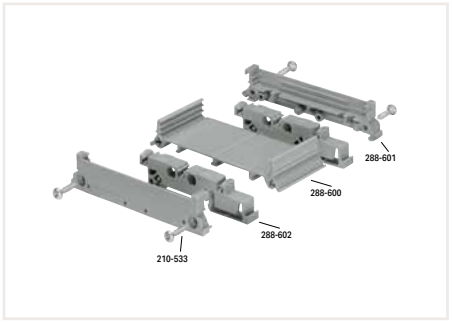

Mounting carrier (size 1)

Length calculation for a complete mounting carrier:

PCB length: L1
Base length: L2 = L1 – 11 mm
Mounting carrier length: L3 = L1 + 2 mm
Lateral cover (size 1): 6.35 mm thick
Free space between base and PCB (when using upper PCB groove): 5 mm
PCB tolerances: 1.5 mm ± 0.2 mm (thickness), ± 0.2 mm (length/width); –0.1/+0.3 for milling contours

Mounting carrier; size 1		
Description	**Item No.**	PU
Lateral cover; size 1; small; 6.35 mm thick	**288-601**	1
Mounting foot for DIN-35 rail	**288-602**	1
Carrier base; size 1; 1 m long	**288-600**	1



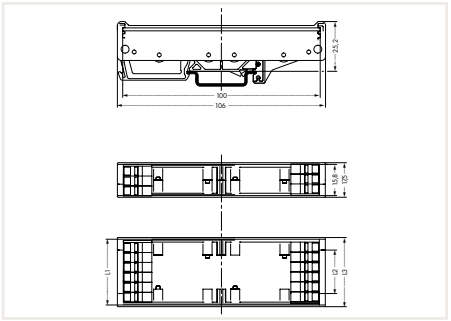

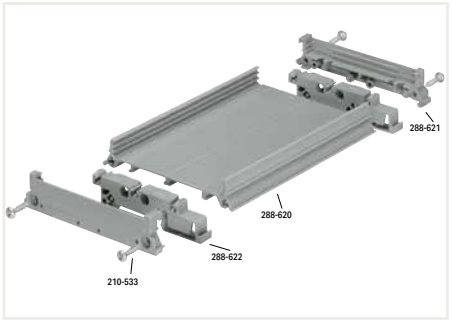

Mounting carrier (size 2)

Length calculation for a complete mounting carrier:

PCB length: L1
Base length: L2 = L1 – 15.8 mm
Mounting carrier length: L3 = L1 + 2 mm
Cover length: L4 = L1
Lateral cover (size 2): 8.75 mm thick
Free space between base and PCB (when using upper PCB groove): 5 mm
PCB tolerances: 1.5 mm ± 0.2 mm (thickness); ± 0.2 mm (length/width); –0.1/+0.3 for milling contours

Mounting carrier; size 2		
Description	**Item No.**	PU
Lateral cover; size 2; small; 8.75 mm thick	**288-621**	1
Mounting foot for DIN-35 rail	**288-622**	1
Carrier base; size 2; 1 m long	**288-620**	1

PU = Packaging Unit; SPU = Subpackaging Unit; Dimensions in mm

DIN-Rail Mount PCB Carriers
288 Series



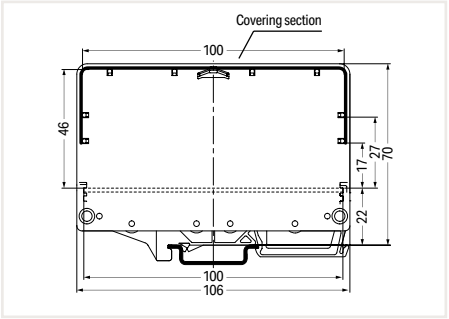

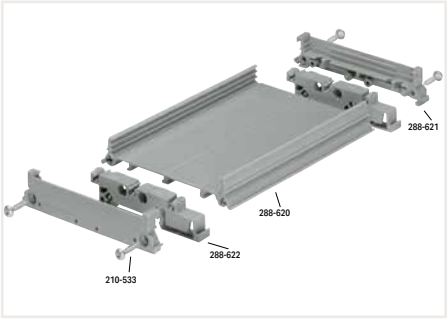

Mounting carrier (size 2)

Length calculation for a complete mounting carrier:

PCB length: L1
Base length: L2 = L1 – 15.8 mm
Mounting carrier length: L3 = L1 + 2 mm
Cover length: L4 = L1
Lateral cover (size 2): 8.75 mm thick
Free space between base and PCB (when using upper PCB groove): 5 mm
PCB tolerances: 1.5 mm ± 0.2 mm (thickness); ± 0.2 mm (length/width); –0.1/+0.3 for milling contours

Mounting carrier; size 2; with cover		
Description	**Item No.**	PU
Lateral cover; size 2; large; 8.75 mm thick	**288-626**	1
Cover; size 2; 1 m long	**288-627**	1

Accessories; for all products on this page

Description	**Item No.**	PU
Phillips screw 2.9 x 13*	**210-533**	25

* Two pieces per lateral cover; for a module length of 35 mm or higher; lateral covers must be riveted for smaller modules. Rivet length depends on module length (rivets are not offered by WAGO).

16

PU = Packaging Unit; SPU = Subpackaging Unit; Dimensions in mm

DIN-Rail-Mount PCB Carriers and Feet
Series 288

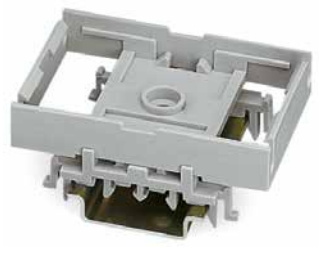

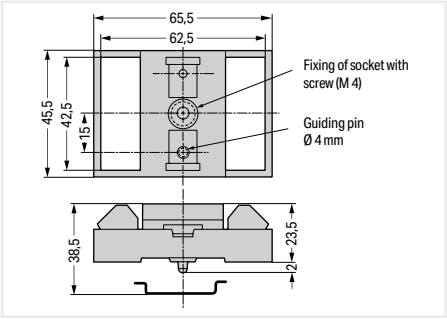

Mounting carrier			
Description		**Item No.**	PU
Mounting carrier	For screw mounting or DIN-rail mounting via universal snap-on type mounting feet (to be ordered separately)	**288-001**	1
Universal mounting foot	Snap-on type; for DIN-15, DIN-32 and DIN-35 rails	**288-002**	10
Mounting carrier for PCBs	Suitable for a "Eurocard" PCB (100 x 160 mm)	**288-003**	1

PU = Packaging Unit; SPU = Subpackaging Unit; Dimensions in mm



WAGO Accessories and WAGO Tools

WAGO Accessories and WAGO Tools

		Page
	Marking Systems	1064
	DIN-Rails	1070
	Operating Tools	1072
	Cable Strippers	1076
	Stripping Tools	1079
	Crimping Tools for Ferrules	1080
	Ferrules	1082
	Pliers, cutting and stripping tools, cable cutters	1084
	Alu - Contact Paste	1087
	Testboy / TRMS-Multimeter	1088
	Test Plugs	1090

Marking System

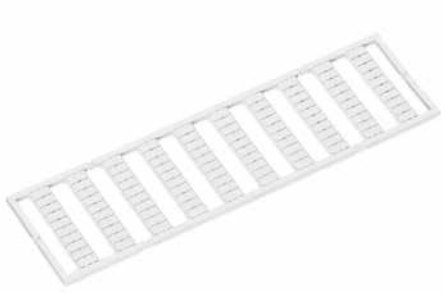

WMB marker card; plain; 10 strips with 10 markers/card			
Color	5 mm Item No.	5 … 5.2 mm Item No.	Pack. Unit
white	**793-501**	**793-5501**	5
yellow	**793-501/000-002**	**793-5501/000-002**	5
red	**793-501/000-005**	**793-5501/000-005**	5
blue	**793-501/000-006**	**793-5501/000-006**	5
gray	**793-501/000-007**	**793-5501/000-007**	5
orange	**793-501/000-012**	**793-5501/000-012**	5
light green	**793-501/000-017**	**793-5501/000-017**	5
green	**793-501/000-023**	**793-5501/000-023**	5
violet	**793-501/000-024**	**793-5501/000-024**	5



WMB Inline; plain; 1,500 WMB markers (5 mm)/reel; stretchable 5 … 5.2 mm		
Color	3.5 mm Item No.	Pack. Unit
white	**2009-115**	1

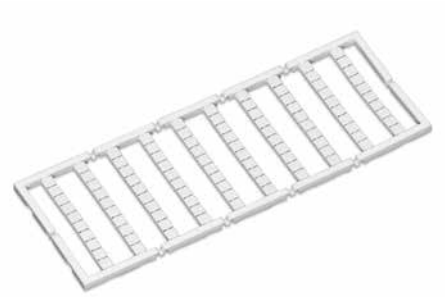

Mini-WSB marker card; plain; 10 strips with 10 markers/card		
Color	3.5 mm Item No.	Pack. Unit
white	**248-501**	5
yellow	**248-501/000-002**	5
red	**248-501/000-005**	5
blue	**248-501/000-006**	5
gray	**248-501/000-007**	5
orange	**248-501/000-012**	5
light green	**248-501/000-017**	5
green	**248-501/000-023**	5
violet	**248-501/000-024**	5



Mini-WSB Inline; plain; 1,700 markers (5 mm)/reel; stretchable 5 … 5.2 mm		
Color	3.5 mm Item No.	Pack. Unit
white	**2009-145**	1

Printed Marker Card

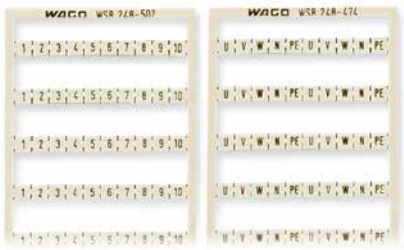

Mini-WSB marker card; e.g., for 745 and 831 Series; 10 strips with 10 markers per card; Horizontal marking; Consecutive numbers/letters per strip		
Marking per card	**Item No.**	Pack. Unit
1 … 10 (10x)	**248-502**	5 cards
11 … 20 (10x)	**248-503**	5 cards
21 … 30 (10x)	**248-504**	5 cards
31 … 40 (10x)	**248-505**	5 cards
41 … 50 (10x)	**248-506**	5 cards
51 … 60 (10x)	**248-569**	5 cards
61 … 70 (10x)	**248-570**	5 cards
71 … 80 (10x)	**248-571**	5 cards
81 … 90 (10x)	**248-572**	5 cards
91 … 100 (10x)	**248-573**	5 cards
1 … 50 (2x)	**248-566**	5 cards
51 … 100 (2x)	**248-507**	5 cards
101 … 150 (2x)	**248-508**	5 cards
151 … 200 (2x)	**248-509**	5 cards
201 … 300 (2x)	**248-510**	5 cards
301 … 400 (2x)	**248-511**	5 cards
401 … 500 (2x)	**248-512**	5 cards
501 … 600 (2x)	**248-513**	5 cards
601 … 700 (2x)	**248-514**	5 cards
701 … 800 (2x)	**248-515**	5 cards
801 … 900 (2x)	**248-516**	5 cards
901 … 1000 (2x)	**248-517**	5 cards
1 … 9, ; (10x)	**248-565**	5 cards
U, V, W, N, PE, U, V, W, N, PE; (10x)	**248-474**	5 cards
L1, L2, L3, N, PE, L1, L2, L3, N, PE; (10x)	**248-472**	5 cards



WMB marker card; e.g., for 745 Series (4 mm² / 10 mm pin spacing) and 831 Series; 10 strips with 10 markers per card; Horizontal marking; Consecutive numbers per strip		
Marking per card	**Item No.**	Pack. Unit
1 … 10 (10x)	**793-502**	5 cards
11 … 20 (10x)	**793-503**	5 cards
21 … 30 (10x)	**793-504**	5 cards
31 … 40 (10x)	**793-505**	5 cards
41 … 50 (10x)	**793-506**	5 cards
51 … 60 (10x)	**793-569**	5 cards
61 … 70 (10x)	**793-570**	5 cards
71 … 80 (10x)	**793-571**	5 cards
81 … 90 (10x)	**793-572**	5 cards
91 … 100 (10x)	**793-573**	5 cards
1 … 50 (2x)	**793-566**	5 cards
51 … 100 (2x)	**793-507**	5 cards
101 … 150 (2x)	**793-508**	5 cards
151 … 200 (2x)	**793-509**	5 cards
201 … 300 (2x)	**793-510**	5 cards
301 … 400 (2x)	**793-511**	5 cards
401 … 500 (2x)	**793-512**	5 cards
501 … 600 (2x)	**793-513**	5 cards
601 … 700 (2x)	**793-514**	5 cards
701 … 800 (2x)	**793-515**	5 cards
801 … 900 (2x)	**793-516**	5 cards
901 … 1000 (2x)	**793-517**	5 cards
1 … 9, ; (10x)	**793-565**	5 cards
L1, L2, L3, N, PE, L1, L2, L3, N, PE; (10x)	**793-472**	5 cards

Marking Card; Self-Adhesive Marking Strips

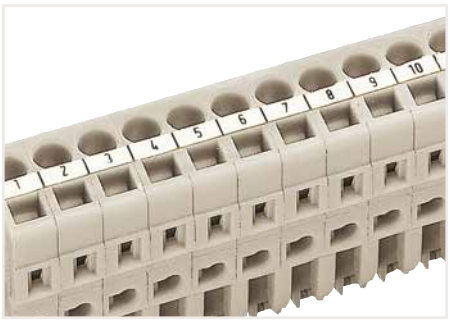

Marking *MCS* Connectors – parallel to conductor entry.

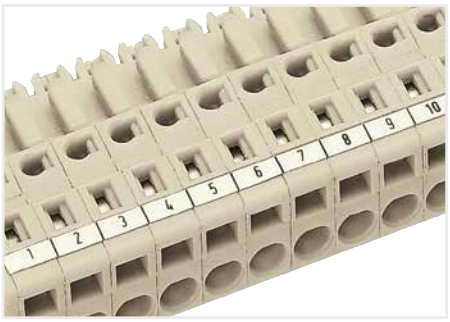

Marking *MCS* Connectors – perpendicular to conductor entry.



Marking PCB terminal blocks (256 Series).

Marking card for 2.5 mm pin spacing; for 218, 233, 234, 250 Series and *MCS* MICRO male and female connectors; Marking perpendicular to conductor entry			
Marking	Strip height	**Item No.**	Pack. Unit
1 … 16 (400 x)	2.3 mm	**210-331/250-202**	1 card/100 strips
17 … 32 (400 x)	2.3 mm	**210-331/250-204**	1 card/100 strips
33 … 48 (400 x)	2.3 mm	**210-331/250-206**	1 card/100 strips
1 … 48 (400 x)	2.3 mm	**210-331/250-207**	1 card/100 strips

Marking card for 2.54 mm pin spacing; for 218, 233, 234, 250 Series			
Marking	Strip height	**Item No.**	Pack. Unit
1 … 16 (400 x)	2.3 mm	**210-331/254-202**	1 card/100 strips
17 … 32 (400 x)	2.3 mm	**210-331/254-204**	1 card/100 strips
33 … 48 (400 x)	2.3 mm	**210-331/254-206**	1 card/100 strips
1 … 48 (100 x)	2.3 mm	**210-331/254-207**	1 card/100 strips

Marking card for 3.5 mm pin spacing; for 250, 252, 739, 805 Series and *MCS* MINI male and female connectors; Marking perpendicular to conductor entry			
Marking	Strip height	**Item No.**	Pack. Unit
1 … 16 (240 x)	3 mm	**210-332/350-202**	1 card/80 strips
17 … 32 (240 x)	3 mm	**210-332/350-204**	1 card/80 strips
33 … 48 (240 x)	3 mm	**210-332/350-206**	1 card/80 strips

Marking card for 3.81 mm pin spacing; for 235, 734, 735, 739 Series			
Marking	Strip height	**Item No.**	Pack. Unit
1 … 16 (160 x)	3 mm	**210-332/381-202**	1 card/80 strips
17 … 32 (160 x)	3 mm	**210-332/381-204**	1 card/80 strips
33 … 48 (160 x)	3 mm	**210-332/381-206**	1 card/80 strips
1 … 32 (80 x)	3 mm	**210-332/381-205**	1 card/80 strips

Marking card for 3.96 mm pin spacing; for 235 Series			
Marking	Strip height	**Item No.**	Pack. Unit
1 … 16 (160 x)	3 mm	**210-332/396-202**	1 card/80 strips
17 … 32 (160 x)	3 mm	**210-332/396-204**	1 card/80 strips
33 … 48 (160 x)	3 mm	**210-332/396-206**	1 card/80 strips
1 … 32 (80 x)	3 mm	**210-332/396-205**	1 card/80 strips

Marking card for 4 mm pin spacing; for 235 Series			
Marking	Strip height	**Item No.**	Pack. Unit
1 … 16 (160 x)	3 mm	**210-332/400-202**	1 card/80 strips
17 … 32 (160 x)	3 mm	**210-332/400-204**	1 card/80 strips
33 … 48 (160 x)	3 mm	**210-332/400-206**	1 card/80 strips
1 … 32 (80 x)	3 mm	**210-332/400-205**	1 card/80 strips

Marking Card; Self-Adhesive Marking Strips

Marking card for 5 mm pin spacing; for 235, 236, 250, 253, 254, 255, 256, 257, 736, 737, 738, 739, 740, 741, 745, 806, 816 Series and *MCS* MIDI male and female connectors; Marking perpendicular to conductor entry			
Marking	Strip height	**Item No.**	Pack. Unit
1 … 16 (160 x)	3 mm	**210-332/500-202**	1 card/80 strips
17 … 32 (160 x)	3 mm	**210-332/500-204**	1 card/80 strips
33 … 48 (160 x)	3 mm	**210-332/500-206**	1 card/80 strips
1 … 32 (80 x)	3 mm	**210-332/500-205**	1 card/80 strips

Marking card for 5 mm pin spacing; for 804 Series and *MCS* MIDI male and female connectors with CAGE CLAMP® connection; Marking parallel to conductor entry			
Marking	Strip height	**Item No.**	Pack. Unit
1 … 12 (300 x)	2.3 mm	**210-331/500-103**	1 card/100 strips
13 … 24 (300 x)	2.3 mm	**210-331/500-104**	1 card/100 strips

Marking card for 5.08 mm pin spacing; for 235, 236, 254, 255, 256, 257, 736, 737, 738, 739, 741 Series and *MCS* MIDI male and female connectors; Marking perpendicular to conductor entry			
Marking	Strip height	**Item No.**	Pack. Unit
1 … 16 (160 x)	3 mm	**210-332/508-202**	1 card/80 strips
17 … 32 (160 x)	3 mm	**210-332/508-204**	1 card/80 strips
33 … 48 (160 x)	3 mm	**210-332/508-206**	1 card/80 strips
1 … 32 (80 x)	3 mm	**210-332/508-205**	1 card/80 strips

Marking card for 5.08 mm pin spacing; for *MCS* MIDI male and female connectors with CAGE CLAMP® connection; Marking parallel to conductor entry			
Marking	Strip height	**Item No.**	Pack. Unit
1 … 12 (200 x)	2.3 mm	**210-331/508-103**	1 card/100 strips
13 … 24 (200 x)	2.3 mm	**210-331/508-104**	1 card/100 strips

Marking card for 5.75 mm pin spacing; for 243 Series			
Marking	Strip height	**Item No.**	Pack. Unit
1 … 12 (160 x)	3 mm	**210-332/575-103**	1 card/80 strips

Marking card for 7 mm pin spacing; for 826 Series			
Marking	Strip height	**Item No.**	Pack. Unit
1 … 12 (160 x)	3 mm	**210-332/700-103**	1 card/80 strips
12 … 1 (160 x)	3 mm	**210-332/700-102**	1 card/80 strips

Marking card for 7.5 mm pin spacing; for 235, 236, 239, 250, 254, 255, 256, 257, 736, 737, 739, 741, 746, 745 Series and *MCS* MIDI male and female connectors; Marking perpendicular to conductor entry			
Marking	Strip height	**Item No.**	Pack. Unit
1 … 20 (80 x)	3 mm	**210-332/750-020**	1 card/80 strips

Marking card for 7.5 mm pin spacing; for 804 Series and *MCS* MIDI male and female connectors with CAGE CLAMP® connection; Marking parallel to conductor entry			
Marking	Strip height	**Item No.**	Pack. Unit
1 … 16 (100 x)	2.3 mm	**210-331/750-202**	1 card/100 strips

Marking card for 7.62 mm pin spacing; for 235, 236, 254, 255, 256, 257, 736, 737, 739, 741 Series and *MCS* MIDI male and female connectors; Marking perpendicular to conductor entry			
Marking	Strip height	**Item No.**	Pack. Unit
1 … 20 (80 x)	3 mm	**210-332/762-020**	1 card/80 strips

Marking card for 7.62 mm pin spacing; for *MCS* MIDI male and female connectors with CAGE CLAMP® connection; Marking parallel to conductor entry			
Marking	Strip height	**Item No.**	Pack. Unit
1 … 16 (100 x)	2.3 mm	**210-331/762-202**	1 card/100 strips

Marking Card; Self-Adhesive Marking Strips

Marking card for 7.62 mm pin spacing; for *MCS* MAXI male and female connectors			
Marking	Strip height	**Item No.**	Pack. Unit
1 … 16 (100 x)	5 mm	**210-334/762-202**	1 card/48 strips

Marking card for 10 mm pin spacing; for 235, 236, 254, 255, 256, 257, 736, 737, 741, 745 Series			
Marking	Strip height	**Item No.**	Pack. Unit
1 … 16 (80 x)	3 mm	**210-332/1000-202**	1 card/80 strips
17 … 32 (80 x)	3 mm	**210-332/1000-204**	1 card/80 strips
33 … 48 (80 x)	3 mm	**210-332/1000-206**	1 card/80 strips

Marking card for 10.16 mm pin spacing; for 235, 236, 254, 255, 256, 257, 736, 737, 741 Series			
Marking	Strip height	**Item No.**	Pack. Unit
1 … 16 (80 x)	3 mm	**210-332/1016-202**	1 card/80 strips
17 … 32 (80 x)	3 mm	**210-332/1016-204**	1 card/80 strips
33 … 48 (80 x)	3 mm	**210-332/1016-206**	1 card/80 strips

Marking card available for all pin spacings:			
Marking	Strip height	**Item No.**	Pack. Unit
plain*	2.3 mm	**210-331**	1 card/100 strips
plain*	3 mm	**210-332**	1 card/80 strips
plain*	5 mm	**210-334**	1 card/48 strips
Only separators printed	2.3 mm	**210-331/xxxx-001**	1 card/100 strips
Only separators printed	3 mm	**210-332/xxxx-001**	1 card/80 strips
Only separators printed	5 mm	**210-334/xxxx-001**	1 card/48 strips
Ordering example: 5.08 mm pin spacing; 3 mm strip height: 210-332/508-001		**(xxxx = pin spacing)**	

* Plain marker cards can be printed via WAGO Smart Script.
WAGO Smart Script is part of the WAGO ProServe® Software. You can download this free software at www.wago.com.

Sticker with Operating Instructions

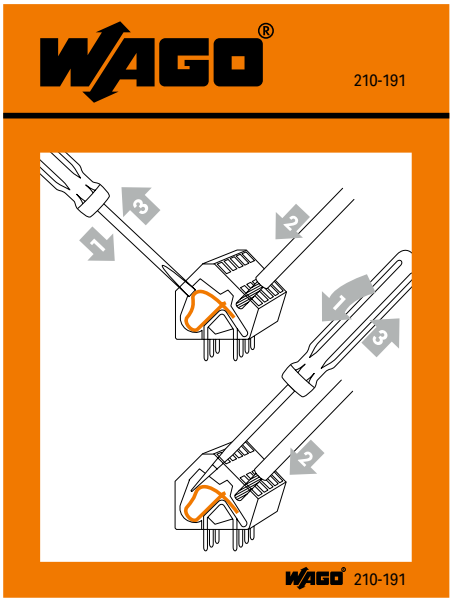

Sticker with operating instructions; for PCB terminal blocks with CAGE CLAMP® connection; Size: (60 x 63) mm		
Series	Item No.	Pack. Unit
236	**210-191**	100
736, 737 and 738	**210-406**	100

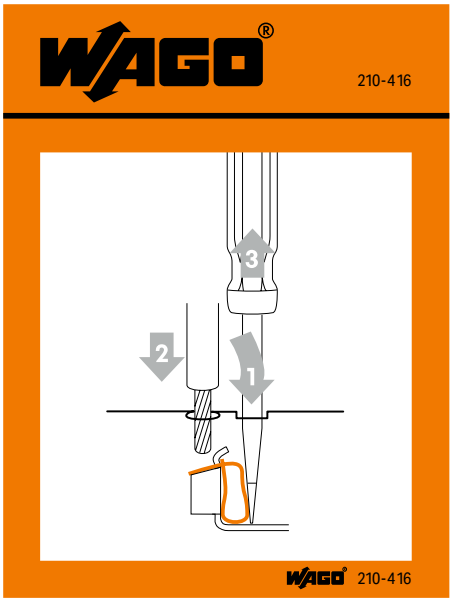

Sticker with operating instructions; for CAGE CLAMP® connection; Size: (60 x 63) mm		
Series	Item No.	Pack. Unit
universal	**210-416**	100

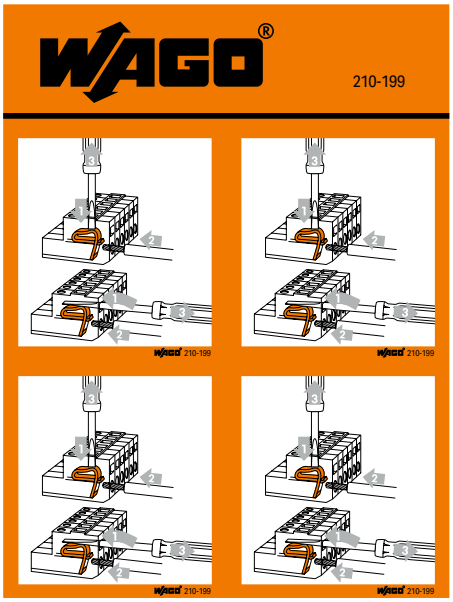

Sticker with operating instructions; for *MCS* Connectors with CAGE CLAMP® connection; Size: (30 x 30) mm x 4 mm		
Series	Item No.	Pack. Unit
universal	**210-199**	100
713	**210-493**	100

DIN-Rail



Dimensions in mm

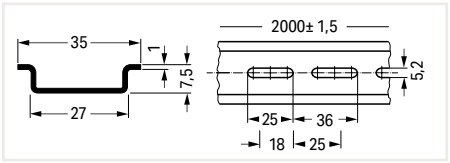

Steel DIN-rail; I_N 76 A (based on 1 m length); 35 x 7.5 mm; 1 mm thick; 2 m long; per EN 60715		
	Item No.	Pack. Unit
unslotted	**210-113**	10 (1)

Hole width: 25 mm; Hole spacing: 36 mm		
slotted	**210-112**	10 (1)

Hole width: 18 mm; Hole spacing: 25 mm		
slotted	**210-115**	1



Dimensions in mm

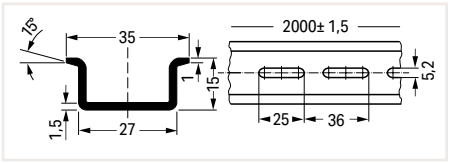

Steel DIN-rail; I_N 125 A (based on 1 m length); 35 x 15 mm; 1.5 mm thick; 2 m long; similar to EN 60715		
	Item No.	Pack. Unit
unslotted	**210-114**	10 (1)
slotted	**210-197**	10 (1)

For the entire range of WAGO DIN-rail types, refer to Full Line Catalog, Volume 1, Rail-Mount Terminal Block Systems, or visit www.wago.com.

Screw



Self-tapping screw; for 1.8 mm Ø mounting hole		
Dimensions	Item No.	Pack. Unit
B 2.2 x 9.5 mm	**209-147**	200 (100)
B 2.2 x 13 mm	**231-194**	200 (100)



Screw with nut; e.g., for locking device or mounting flange		
Dimensions	Item No.	Pack. Unit
M 2 x 12 mm	**231-195**	200 (100)
M 2.5 x 10 mm	**231-295**	200 (100)

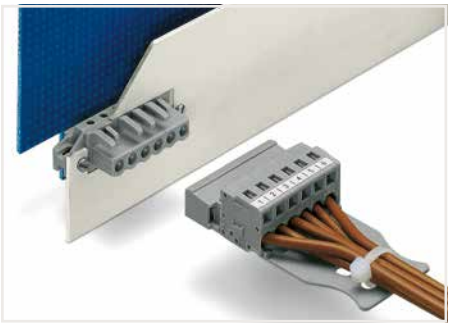

The innovative flange design provides standard panel mounting options or various through-panel mounting configurations. Depending on the type of application and flange, female headers can be used either for through-panel or flush mounted applications.



Locking devices enhance connection reliability between male headers with angled solder pins and the PCB. This substantially reduces mechanical stress on both solder pins and joints, particularly when dealing with small lengths and frequent mating cycles.

Operating Tool



Operating tool with a partially insulated shaft; Type 1; (2.5 x 0.4) mm blade

	Item No.	Pack. Unit
	210-719	50 (1)

Operating tool with a partially insulated shaft; Type 2; (3.5 x 0.5) mm blade

	210-720	50 (1)

Operating tool with a partially insulated shaft; type 3; (5.5 x 0.8) mm blade

	210-721	25 (1)



Set of operating tools with a partially insulated shaft; Type 1; (2.5 x 0.4) mm blade; Type 2; (3.5 x 0.5) mm blade; Type 3; (5.5 x 0.8) mm blade

	Item No.	Pack. Unit
	210-722	1



Operating tool with a partially insulated shaft; Type 1; (2.5 x 0.4) mm blade; short

	Item No.	Pack. Unit
	210-647	50 (1)

Operating tool with a partially insulated shaft; (2.5 x 0.4) mm blade; short; angled

	210-648	50 (1)

Operating tool with a partially insulated shaft; (3.5 x 0.5) mm blade; short

	210-657	50 (1)

Operating tool with a partially insulated shaft; (3.5 x 0.5) mm blade; short; angled

	210-658	50 (1)

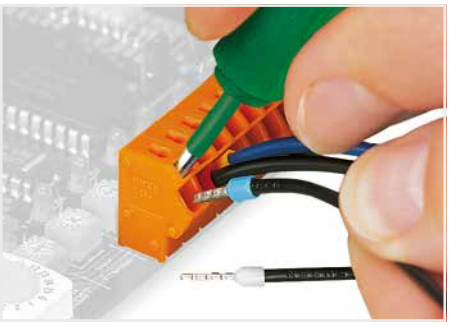

Thanks to their blade dimensions, the offered operating tools are ideal for operating both PCB terminal blocks and *MCS* Connectors.



Set of operating tools in a box (210-722)

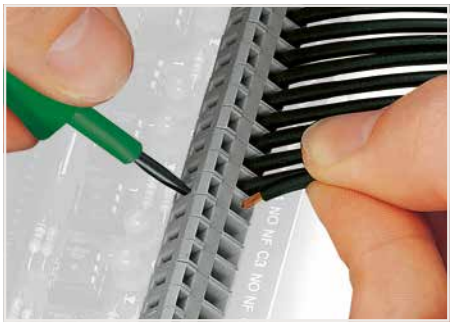

The offered operating tools with blade dimensions per DIN 5264 are ideal for operating PCB terminal blocks.

Operating Tool



Operating tool; for 233 and 733 Series		
	Item No.	Pack. Unit
metal; partially insulated; green	**233-335**	50 (1)
insulated; natural	**233-332**	500 (50)
insulated; yellow	**233-331**	500 (25)



Operating tool; for 236 Series		
	Item No.	Pack. Unit
insulated	**236-332**	400 (50)
metal	**236-335**	500 (1)



Compared to standard screwdrivers, these operating tools are far more convenient for wiring PCB terminal strips at factory.

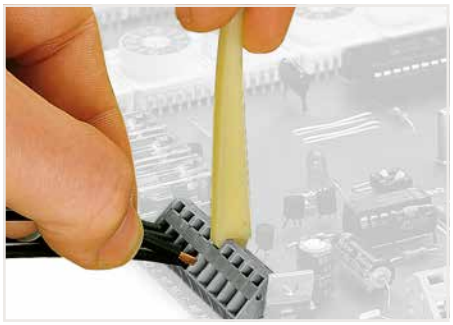

Inserting a conductor via operating tool.

Disconnection Tool



Disconnection tool; for 744 Series

	Item No.	Pack. Unit
	206-841	1



Operating tool, for male and female connectors equipped with CAGE CLAMP® connection, 5/5.08 mm and 7.5/7.62 mm pin spacings

Color	Item No.	Pack. Unit
yellow	**210-251**	20
red	**210-250**	20



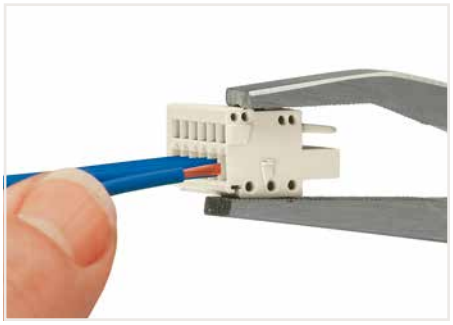

When operating the handles beyond the locked position, the ratchet allows the tool to open and be removed from the terminal block.
The operating pliers are placed into the upper operating slot of the rail-mount terminal block and the clamp is hooked into the lateral operating slot. The contact is fully opened by pressing the handles together until they engage. This will allow both hands to be used for wiring the terminal blocks.

Cable Stripper



Cable knife; for Ø 8 … 28 mm / 0.31 … 1.10 inch; with a unique, changeable cable bracket system; including cable bracket

	Item No.	Pack. Unit
	206-1403	1



Cable knife set; for Ø 4 … 70 mm / 0.16 … 2.75 inch; including all cable brackets in a Sortimo® Box

	Item No.	Pack. Unit
	206-1400	1

Item-Specific Accessories

Cable bracket; for Ø 4 … 16 mm / 0.16 … 0.63 inch



206-1411 1

Cable bracket; for Ø 8 … 28 mm / 0.31 … 1.10 inch



206-1412 1

Cable bracket; for Ø 27 … 35 mm / 1.06 … 1.38 inch



206-1413 1

Cable bracket; for Ø 35 … 50 mm / 1.38 … 1.97 inch



206-1414 1

Cable bracket; for Ø 50 … 70 mm / 1.97 … 2.75 inch



206-1415 1

Accessories

Spare inside blade



206-1418 1

Spare hook blade



206-1419 1





Strip large cross sections with the hook blade.

Never use this tool on or near live electrical circuits!



To replace the cable bracket, use the new bracket as an operating tool and pull it upwards.



The cutting depth of the hook blade can be adjusted with the slider.



The cutting depth of the inner knife can be adjusted with the screw.



Release the fuse before using the hook blade.

17

Cable Stripper



In-socket cable stripper; for Ø 8 … 13 mm / 5/16 … 1/2 inch

Item No.	Pack. Unit
206-1441	1



Product features:

- Extra long design and improved force transmission simplifies stripping in deep device connection sockets
- Special four-blade design for an even more precise round cut
- No cutting depth adjustment required
- TiN-coated blades, TÜV/GS tested
- Ø 8 … 13 mm / 5/16 … 1/2 inch
- Strips all standard round cables, including NYM 3 x 1.5 mm² … 5 x 2.5 mm²



Universal cable stripper; for Ø 8 … 13 mm / 5/16 … 1/2 inch

Item No.	Pack. Unit
206-1442	1



Product features:

- Secure grip achieved with soft padding for non-slip grips
- Technically improved functionality
- New locking mechanism prevents the unwanted opening of the tool
- Absolutely straightforward, quick and easy longitudinal cuts – with innovative internal cable duct
- Redesigned blade layout and intake to stop cable waste from jamming the tool
- Durable and ergonomically designed pocket clip
- Ø 8 … 13 mm / 5/16 … 1/2 inch









Data cable stripper; for Ø 4.5 … 10 mm / 3/16 … 3/8 inch

Item No.	Pack. Unit
206-1451	1



Product features:

- Strip outer insulation and foil sheathing with one tool
- Ideal for stripping PVC-insulated data cables with thin insulation (e.g., Cat 5, Cat 6, Cat 7, twisted-pair cables)
- TiN-coated blades
- Ø 4.5 … 10 mm / 3/16 … 3/8 inch



Cable Stripper



Stripping pliers; for sensor cables; for Ø 3.2 … 4.4 mm / 0.13 … 0.17 inch

	Item No.	Pack. Unit
	206-1481	1

Item-Specific Accessories

Replacement blade set; for Ø 3.2 … 4.4 mm / 0.13 … 0.17 inch



206-1491 1



Stripping pliers; for control cables; for Ø 4.4 … 7 mm / 0.17 … 0.27 inch

	Item No.	Pack. Unit
	206-1482	1

Item-Specific Accessories

Replacement blade set; for Ø 4.4 … 7 mm / 0.17 … 0.27 inch



206-1492 1





Never use this tool on or near live electrical circuits!

The stripping pliers for sensor cables have a blade geometry specially designed for sensor cables with a smaller cross section and a working range from Ø 3.2 mm (for stranded cables and round cables with Ø 3.2 mm … 4.4 mm / 0.13 … 0.17 inch). The stripping pliers for control cables are designed for stronger cables from Ø 4.4 mm (for stranded cables and round cables with Ø 4.4 mm … 7 mm / 0.17 … 0.27 inch).
These stripping pliers quickly and safely strip cables for connecting, e.g., sensor/actuator distribution boxes, bus couplers and pluggable connectors.
Suitable for:

- Halogen-free PUR sensor/actuator cables
- Highly flexible TPE-U cables
- Control cables
- PUR cables
- PUR/PVC cables
- PVC cables
- Multi-core cables
- Shielded and unshielded cables

Wire Stripper



Wire stripper "Quickstrip Vario"; 0.03 … 16 mm² / 34 … 6 AWG		
	Item No.	Pack. Unit
	206-1125	1

Accessories		
Blade set; Standard; 0.03 … 16 mm² / 34 … 6 AWG		
	**206-1126**	1
Blade set; V-blade; 0.14 … 4 mm² / 24 … 12 AWG		
	**206-1127**	1
Blade set; Oval blade; 10 … 16 mm² / 8 … 6 AWG		
	**206-1128**	1
Spare stripping stop		
	**206-1129**	1
Spare cut protector		
	**206-1131**	1
Spare clamping jaws		
	**206-1132**	1



Cutting a conductor.

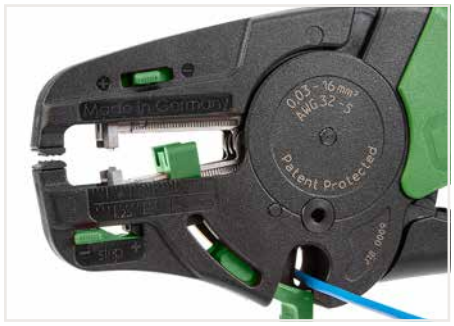

Partially stripping a conductor.

Wire Stripper:

- Automatically adjust to conductor size
- Stripping blades cause no damage to conductor strands
- Gripping pressure of jaws adjusts automatically to conductor insulation diameter
- Clamping jaws and stripping blades automatically open once the stripping process is completed – no splaying of the conductor strands
- Exact strip length may be set by sliding black setting stop
- Stripping blades can be replaced
- Self-sharpening, fully protected cutter (replaceable)
- Entire body made of glass-fiber-reinforced polyamide
- Cutting capacity of the wire cutter of fine-stranded conductors up to 16 mm² (6 AWG)

Crimping Tool



Crimping Tool "Variocrimp 4"; for insulated and uninsulated ferrules; Crimping range: 0.25 … 4 mm² (24 … 12 AWG)		
	Item No.	Pack. Unit
	206-1204	1

Spring clamp; large		
	206-1205	1



Spring clamp; small		
	206-1206	1





Crimping Tool "Variocrimp 16"; for insulated and uninsulated ferrules; Crimping range: 6 mm² (10 AWG), 10 mm² (8 AWG) and 16 mm² (6 AWG)		
	Item No.	Pack. Unit
	206-1216	1

Spring clamp; small		
	206-1206	1



Application notes:

- The built-in crimping pressure control of "Variocrimp 4" automatically adjusts the crimping force to the conductor cross section. Select the wire gauge on "Variocrimp 16" before crimping.
- Only one crimping station is needed to handle the specified conductor range.
- Uniform, compact crimping on all four sides for high conductor retention.
- No need to center the ferrules into the terminal blocks.
- Crimping can be performed from either side (for left- or right-handed users).
- Built-in ratchet mechanism ensures gas-tight crimp connection.
- Crimping tools open automatically after crimping operation is complete.
- Ergonomically designed handles.



Insert the ferruled conductor into the crimping station.



Squeeze handles until ratchet mechanism is released.

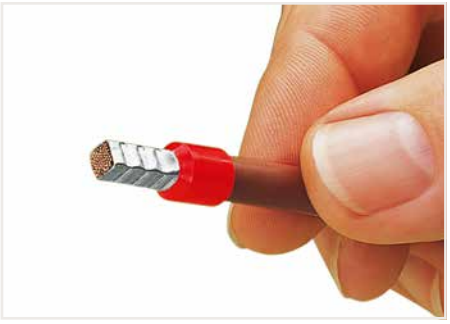

A perfect gas-tight crimp – both electrically and mechanically reliable



Only for "Variocrimp 16":
Adjust conductor cross section with crimping tool in open position.

Crimping Tool





Application notes:

- Improved crimping for higher conductor retention
- Crimping can be performed from either side (for left- or right-handed users).
- Built-in ratchet mechanism ensures gas-tight crimp connection.
- Crimping tools open automatically after crimping operation is complete.
- Ergonomically designed handles.

Crimping Tool 25; for insulated and uninsulated ferrules; crimping range: 10 mm² (8 AWG), 16 mm² (6 AWG) and 25 mm² (4 AWG)		
	Item No.	Pack. Unit
	206-1225	1

Crimping Tool 50; for insulated and uninsulated ferrules; crimping range: 35 mm² (2 AWG) and 50 mm² (1/0 AWG)		
	Item No.	Pack. Unit
	206-1250	1



Insert the ferruled conductor into the crimping station.



Squeeze handles until ratchet mechanism is released.

What is a "gas-tight" connection?
In a gas-tight connection, the conductor and the ferrule are compressed, eliminating all spaces. Under normal atmospheric conditions, neither a liquid nor gaseous medium can penetrate the crimped connection.
Oxidation between crimped single conductors is prevented, virtually eliminating the possibility of any increase in the crimped connection's resistance. In some exceptional cases, minute, isolated spaces may be present. However, these instances can be considered as closed off due to the twisted conductor.
Inadequate crimping can allow the conductor to be pulled out of the connection. Hollow spaces also remain, permitting oxidation formation and leading to an increase in contact resistance.
Elevated resistance is detrimental for both signal transmission (signal flow is damped) and power transmission, resulting in power loss and contact heating (risk of fire).
Crimping tools with built-in ratchets are recommended (e.g., WAGO Crimping Tools). These tools open automatically after the crimping operation is complete. Space-saving crimping from all four sides is ideal for spring clamp termination.
Ferruled conductor cross sections specified for WAGO products are based on this crimping method.

Ferrule



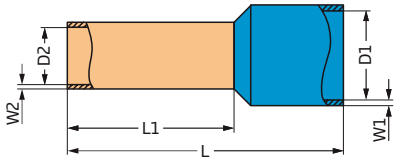

Ferrule ▸ insulated ▸ electro-tin plated ▸ Electrolytic copper

Conductor cross-section	Color	Strip length	Total length (L)	Crimp length (length of sleeve) (L1)	Inner diameter of plastic collar (D1)	Diameter crimp sleeve inside (D2)	Wall thickness of crimp sleeve (W2)	Wall thickness (plastic collar) (W1)	Item No.	PU
0.25 mm² / 24 AWG	yellow	7 … 8 mm / 0.28 … 0.31 inch	10 mm	6 mm	1.8 mm	0.85 mm	0.15 mm	0.25 mm	216-321	1000
0.25 mm² / 24 AWG	yellow	9 … 10 mm / 0.35 … 0.39 inch	12 mm	8 mm	1.8 mm	0.85 mm	0.15 mm	0.25 mm	216-301	1000
0.34 mm² / 22 AWG	light turquoise	7 … 8 mm / 0.28 … 0.31 inch	10 mm	6 mm	2 mm	0.85 mm	0.15 mm	0.25 mm	216-322	1000
0.34 mm² / 22 AWG	light turquoise	9 … 10 mm / 0.35 … 0.39 inch	12 mm	8 mm	2 mm	0.85 mm	0.15 mm	0.25 mm	216-302	1000
0.5 mm² / 20 AWG	white	7 … 8 mm / 0.28 … 0.31 inch	12 mm	6 mm	2.6 mm	1 mm	0.15 mm	0.25 mm	216-221	1000
0.5 mm² / 20 AWG	white	9 … 10 mm / 0.35 … 0.39 inch	14 mm	8 mm	2.6 mm	1 mm	0.15 mm	0.25 mm	216-201	1000
0.5 mm² / 20 AWG	white	12 … 13 mm / 0.47 … 0.51 inch	16 mm	10 mm	2.6 mm	1 mm	0.15 mm	0.25 mm	216-241	1000
0.75 mm² / 18 AWG	gray	8 … 9 mm / 0.31 … 0.35 inch	12 mm	6 mm	2.8 mm	1.2 mm	0.15 mm	0.25 mm	216-222	1000
0.75 mm² / 18 AWG	gray	10 … 11 mm / 0.39 … 0.43 inch	14 mm	8 mm	2.8 mm	1.2 mm	0.15 mm	0.25 mm	216-202	1000
0.75 mm² / 18 AWG	gray	12 … 13 mm / 0.47 … 0.51 inch	16 mm	10 mm	2.8 mm	1.2 mm	0.15 mm	0.25 mm	216-242	1000
0.75 mm² / 18 AWG	gray	14 … 15 mm / 0.55 … 0.59 inch	18 mm	12 mm	2.8 mm	1.2 mm	0.15 mm	0.25 mm	216-262	1000
1 mm² / 18 AWG	red	8 … 9 mm / 0.31 … 0.35 inch	12 mm	6 mm	3 mm	1.4 mm	0.15 mm	0.25 mm	216-223	1000
1 mm² / 18 AWG	red	10 … 11 mm / 0.39 … 0.43 inch	14 mm	8 mm	3 mm	1.4 mm	0.15 mm	0.25 mm	216-203	1000
1 mm² / 18 AWG	red	12 … 13 mm / 0.47 … 0.51 inch	16 mm	10 mm	3 mm	1.4 mm	0.15 mm	0.25 mm	216-243	1000
1 mm² / 18 AWG	red	14 … 15 mm / 0.55 … 0.59 inch	18 mm	12 mm	3 mm	1.4 mm	0.15 mm	0.25 mm	216-263	1000
1.5 mm² / 16 AWG	black	8 … 9 mm / 0.31 … 0.35 inch	12 mm	6 mm	3.5 mm	1,7 mm	0,15 mm	0,25 mm	216-224	1000
1.5 mm² / 16 AWG	black	10 … 11 mm / 0.39 … 0.43 inch	14 mm	8 mm	3.5 mm	1.7 mm	0.15 mm	0.25 mm	216-204	1000
1.5 mm² / 16 AWG	black	12 … 13 mm / 0.47 … 0.51 inch	16 mm	10 mm	3.5 mm	1.7 mm	0.15 mm	0.25 mm	216-244	1000
1.5 mm² / 16 AWG	black	14 … 15 mm / 0.55 … 0.59 inch	18 mm	12 mm	3.5 mm	1.7 mm	0.15 mm	0.25 mm	216-264	1000
2.08 mm² / 14 AWG	yellow	10 … 11 mm / 0.39 … 0.43 inch	14 mm	8 mm	3.6 mm	2.05 mm	0.15 mm	0.3 mm	216-205	1000
2.5 mm² / 14 AWG	blue	10 … 11 mm / 0.39 … 0.43 inch	15 mm	8 mm	4.2 mm	2.2 mm	0.15 mm	0.25 mm	216-206	1000
2.5 mm² / 14 AWG	blue	12 … 13 mm / 0.47 … 0.51 inch	17 mm	10 mm	4.2 mm	2.2 mm	0.15 mm	0.25 mm	216-246	1000
2.5 mm² / 14 AWG	blue	14 … 15 mm / 0.55 … 0.59 inch	19 mm	12 mm	4.2 mm	2.2 mm	0.15 mm	0.25 mm	216-266	1000
2.5 mm² / 14 AWG	blue	20 … 21 mm / 0.79 … 0.83 inch	25 mm	18 mm	4.2 mm	2.2 mm	0.15 mm	0.25 mm	216-286	500
4 mm² / 12 AWG	gray	12 … 13 mm / 0.47 … 0.51 inch	18 mm	10 mm	4.8 mm	2.8 mm	0.2 mm	0.3 mm	216-207	500
4 mm² / 12 AWG	gray	14 … 15 mm / 0.55 … 0.59 inch	20 mm	12 mm	4.8 mm	2.8 mm	0.2 mm	0.3 mm	216-267	500
4 mm² / 12 AWG	gray	20 … 21 mm / 0.79 … 0.83 inch	26 mm	18 mm	4.8 mm	2.8 mm	0.2 mm	0.3 mm	216-287	500
6 mm² / 10 AWG	yellow	14 … 15 mm / 0.55 … 0.59 inch	20 mm	12 mm	6.3 mm	3.5 mm	0.2 mm	0.3 mm	216-208	1000
6 mm² / 8 AWG	red	16 … 17 mm / 0.63 … 0.67 inch	22 mm	12 mm	7.6 mm	4.5 mm	0.2 mm	0.4 mm	216-209	1000
6 mm² / 10 AWG	yellow	20 … 21 mm / 0.79 … 0.83 inch	26 mm	18 mm	6.3 mm	3.5 mm	0.2 mm	0.3 mm	216-288	100
10 mm² / 8 AWG	red	20 … 21 mm / 0.79 … 0.83 inch	28 mm	18 mm	7.6 mm	4.5 mm	0.2 mm	0.4 mm	216-289	100
16 mm² / 6 AWG	blue	23 … 24 mm / 0.91 … 0.94 inch	28 mm	18 mm	8.8 mm	5.8 mm	0.2 mm	0.4 mm	216-210	500

PU = packaging unit; SPU = subpackaging unit

Ferrule



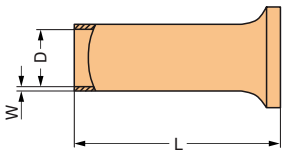

Ferrule ▸ uninsulated ▸ electro-tin plated ▸ Electrolytic copper

Conductor cross-section	Strip length	Total length (L)	Diameter crimp sleeve inside (D)	Wall thickness of crimp sleeve (W)	Item No.	PU
0.25 mm² / 24 AWG	5 mm / 0.2 inch	5 mm	0.7 mm	0.15 mm	216-151	5000
0.25 mm² / 24 AWG	7 mm / 0.28 inch	7 mm	0.7 mm	0.15 mm	216-131	5000
0.34 mm² / 22 AWG	5 mm / 0.2 inch	5 mm	0.8 mm	0.15 mm	216-152	5000
0.34 mm² / 22 AWG	7 mm / 0.28 inch	7 mm	0.8 mm	0.15 mm	216-132	5000
0.5 mm² / 20 AWG	6 … 7 mm / 0.24 … 0.28 inch	6 mm	1 mm	0.15 mm	216-121	5000
0.5 mm² / 20 AWG	8 … 9 mm / 0.31 … 0.35 inch	8 mm	1 mm	0.15 mm	216-101	5000
0.5 mm² / 20 AWG	10 mm / 0.39 inch	10 mm	1 mm	0.15 mm	216-141	5000
0.75 mm² / 18 AWG	6 mm / 0.24 inch	6 mm	1.2 mm	0.15 mm	216-122	5000
0.75 mm² / 18 AWG	8 mm / 0.31 inch	8 mm	1.2 mm	0.15 mm	216-102	5000
0.75 mm² / 18 AWG	10 mm / 0.39 inch	10 mm	1.2 mm	0.15 mm	216-142	5000
1 mm² / 18 AWG	6 mm / 0.24 inch	6 mm	1.4 mm	0.15 mm	216-123	5000
1 mm² / 18 AWG	8 mm / 0.31 inch	8 mm	1.4 mm	0.15 mm	216-103	5000
1 mm² / 18 AWG	10 mm / 0.39 inch	10 mm	1.4 mm	0.15 mm	216-143	5000
1.5 mm² / 16 AWG	6 mm / 0.24 inch	6 mm	1.7 mm	0.15 mm	216-124	5000
1.5 mm² / 16 AWG	8 mm / 0.31 inch	8 mm	1.7 mm	0.15 mm	216-104	5000
1.5 mm² / 16 AWG	10 mm / 0.39 inch	10 mm	1.7 mm	0.15 mm	216-144	5000
2.5 mm² / 14 AWG	8 mm / 0.31 inch	8 mm	2.1 mm	0.2 mm	216-105	5000
2.5 mm² / 14 AWG	10 mm / 0.39 inch	10 mm	2.1 mm	0.2 mm	216-106	5000
4 mm² / 12 AWG	10 mm / 0.39 inch	10 mm	2.8 mm	0.2 mm	216-107	5000
6 mm² / 10 AWG	12 mm / 0.47 inch	12 mm	3.5 mm	0.2 mm	216-108	1000
10 mm² / 8 AWG	12 mm / 0.47 inch	12 mm	4.5 mm	0.2 mm	216-109	1000
16 mm² / 6 AWG	15 mm / 0.59 inch	15 mm	5.8 mm	0.2 mm	216-110	500
25 mm² / 4 AWG	25 mm / 0.98 inch	25 mm	7.3 mm	0.2 mm	216-413	50
35 mm² / 2 AWG	25 mm / 0.98 inch	25 mm	8.3 mm	0.2 mm	216-414	50
35 mm² / 2 AWG	30 mm / 1.18 inch	30 mm	8.3 mm	0.2 mm	216-424	50
50 mm² / 1/0 AWG	30 mm / 1.18 inch	30 mm	10.3 mm	0.3 mm	216-425	50
50 mm² / 1/0 AWG	35 mm / 1.38 inch	35 mm	10.3 mm	0.3 mm	216-435	50



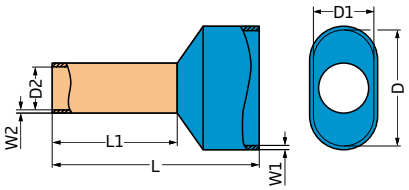

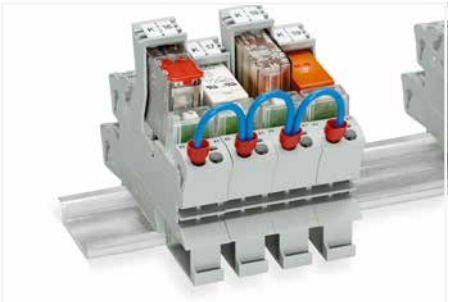

Wire bridge with twin ferrules

Twin ferrule ▸ insulated ▸ electro-tin plated ▸ Electrolytic copper

Conductor cross-section	Color	Strip length	Total length (L)	Crimp length (length of sleeve) (L1)	Inner dimension plastic collar large (D)	Inner dimension plastic collar small (D1)	Diameter crimp sleeve inside (D2)	Wall thickness (plastic collar) (W1)	Wall thickness of crimp sleeve (W2)	Item No.	PU
2 x 2.5 mm² / 2 x 14 AWG	blue	13.5 … 14.5 mm / 0.53 … 0.57 inch	21 mm	12 mm	8 mm	4.5 mm	2.9 mm	0.4 mm	0.2 mm	216-545	100
2 x 4 mm² / 2 x 12 AWG	gray	13.5 … 14.5 mm / 0.53 … 0.57 inch	22 mm	12 mm	9 mm	5.2 mm	3.7 mm	0.5 mm	0.2 mm	216-546	100
2 x 6 mm² / 2 x 10 AWG	yellow	13.5 … 14.5 mm / 0.53 … 0.57 inch	23 mm	12 mm	11.4 mm	6.2 mm	4.7 mm	0.5 mm	0.2 mm	216-547	100

PU = packaging unit; SPU = subpackaging unit

Pliers
VDE tested ▸ 1000 V ▸ 2-component grip ▸ isolated



Combination pliers ▸ with cutter		
Color	**Item No.**	PU
green/gray	**206-1312**	1

Technical Data:

Dimensions (W x H x D):	58 x 31 x 171 mm
Cutting capacity hard wire Ø:	1.8 mm
Cutting capacity medium-hard wire Ø:	2.5 mm



Radio/telephone pliers ▸ straight ▸ with cutter		
Color	**Item No.**	PU
green/gray	**206-1324**	1

Technical Data:

Dimensions (W x H x D):	57 x 31 x 210 mm
Cutting capacity hard wire Ø:	1.8 mm
Cutting capacity medium-hard wire Ø:	2.8 mm



Radio/telephone pliers ▸ bent ▸ with cutter		
Color	**Item No.**	PU
green/gray	**206-1334**	1

Technical Data:

Dimensions (W x H x D):	57 x 31 x 210 mm
Cutting capacity hard wire Ø:	1.8 mm
Cutting capacity medium-hard wire Ø:	2.8 mm













PU = packaging unit; SPU = subpackaging unit

Cutting tools and stripping pliers
VDE tested ▸ 1000 V ▸ 2-component grip ▸ isolated



Heavy-duty diagonal cutter ▸ up to piano wires		
Color	**Item No.**	PU
green/gray	**206-1302**	1

Technical Data:

Dimensions (W x H x D):	57 x 31 x 175 mm
Cutting capacity piano wire Ø:	2 mm
Cutting capacity hard wire Ø:	2.5 mm
Cutting capacity medium-hard wire Ø:	3.5 mm



Cable shears ▸ for copper and aluminum cables		
Color	**Item No.**	PU
green/gray	**206-1342**	1

Technical Data:

Dimensions (W x H x D):	57 x 31 x 170 mm
Cutting capacity (CU + AL) Ø:	10 mm
Cutting capacity (CU + AL) max.:	50 mm²



Stripping pliers ▸ with spring, adjusting screw and nut		
Color	**Item No.**	PU
green/gray	**206-1152**	1

Technical Data:

Dimensions (W x H x D):	58 x 31 x 172 mm
Solid conductor:	0.25 … 10 mm² / 24 … 8 AWG
Fine-stranded conductor:	0.25 … 10 mm² / 24 … 8 AWG
Stranded conductor:	0.25 … 10 mm² / 24 … 8 AWG











17

PU = packaging unit; SPU = subpackaging unit

Cable Cutter



Cable cutter; for copper and aluminum cables up to 35 mm² (2 AWG)		
	Item No.	Pack. Unit
	206-118	1



Cutting a cable.

Alu - Contact Paste
Terminating Aluminum Conductors



Syringe; contains 20 ml "Alu-Plus" Contact Paste		
	Item No.	Pack. Unit
	249-130	20 (5)

Terminating Aluminum Conductors
WAGO spring clamp terminal blocks are suitable for solid aluminum conductors ❶ up to 4 mm²/12 AWG if WAGO "Alu-Plus" Contact Paste is used for termination.
Advantages of the "Alu-Plus" Contact Paste:
- Automatically destroys the oxide film during clamping.
- Prevents fresh oxidation at the clamping point.
- Prevents electrolytic corrosion between aluminum and copper conductors (in the same terminal block).
- Provides long-term protection against corrosion.

Using terminal blocks with CAGE CLAMP® Spring Pressure Connection Technology, aluminum conductors must first be cleaned with a blade and then immediately be inserted into the clamping units filled with "Alu-Plus" Contact Paste.
It is also possible to apply WAGO "Alu-Plus" additionally on the whole surface of the aluminum conductor before termination.
Please note that the nominal currents must be adapted to the reduced conductivity of the aluminum conductors:
2.5 mm² (14 AWG) = 16 A
4 mm² (12 AWG) = 22 A

WAGO "Alu-Plus" in the syringe offers a higher degree of reliability and cleanliness when terminating solid aluminum conductors.
Filling is, for example, quickly performed on WAGO PCB Terminal Trips:

❶ Aluminum conductors per IEC 61545 standard, Class B, "Alloy 1370" with 90 … 180 N/mm² tensile strength and 1 … 4% elongation
Standard values: 90 … 180 MPa tensile strength, 1 … 4% elongation (per EN 615.4.1)

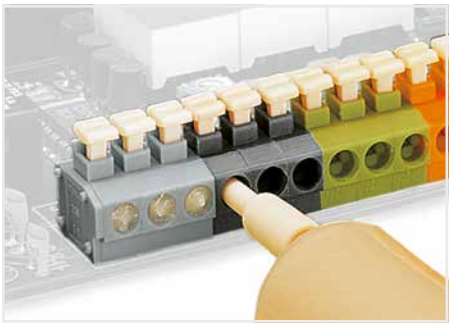

WAGO Lighting Connectors
Push nozzle of the "Alu-Plus" syringe first into the circular entry and then into the square conductor entry hole of the WAGO Lighting Connector.

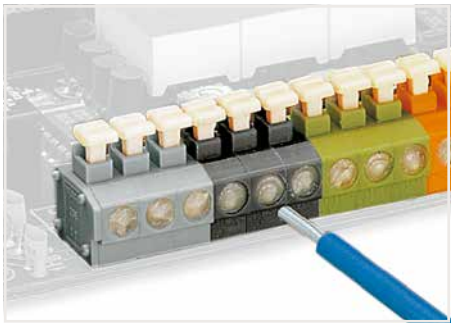

Press plunger down until the "Alu-Plus" has filled both entry holes.
Note: Not suitable for higher temperature applications!

Testboy
206 Series



Testboy; with integrated flashlight, non-contact voltage tester		
	Item No.	Pack. Unit
	206-804	1



A device that will reliably detect AC voltage in cables, sockets, fuses, switches, outlets and other installations.
Testboy can detect the following:

- Live conductors
- Cable breaks
- Blown fuses (in cartridges or holders)
- Defective switches
- Defective lamps in strings of lights

TRMS multimeter ▸ Digital multimeter, with contact-less voltage tester ▸ CAT III 600 V / CAT IV 600 V ▸ with temperature sensor ▸ IP54 ▸ with accessories



TRMS multimeter		
Color	**Item No.**	PU
green/black	**206-910**	1

Product Features:
- Multipurpose Magnetic Holder for Hands-Free Operation
- Two OFF Switch Positions

Technical Data	
Scope of Delivery	Test leads, Test probes 206-912, Thermocouple, Thermocouple adapter, 9 V battery

Electrical Data	
Display	Illuminated display with 6000 digits; Bar graph with 61 segments
True RMS measurement	Yes
Automatic range selection	Yes
Bandwidth	3 kHz (V) / 1 kHz (A)
Basic accuracy	0.2 %
AC voltage	600 V (6 ranges); Resolution: 0.01 mV
AC voltage (LowZ)	600 V (4 ranges); Resolution: 0.001 V
DC voltage	600 V (6 ranges); Resolution: 0.01 mV
AC current	0.001 ... 10 A (2 ranges)
DC current	0.001 ... 10 A (2 ranges)
Resistance measurement	60 MΩ (6 ranges); Resolution: 0.1 Ω
Acoustic continuity test/Diode test	Yes
Frequency measurement (max.); Duty cycle	Up to 3 kHz (3 ranges); Yes
Capacitance measurement	1000 µF (6 ranges); Resolution: 0.01 nF
Temperature measurement:	-20 ... 760 °C / -4 ... 1400 °F; Resolution: 1
Non-contact voltage detection	Yes
Current value memory (Data Hold)	Yes
Relative measurement	Yes
Power supply	9 V; Alkaline battery (6LF22)
Protection Type	IP54
Measurement voltage CAT IV (max.)	600 V
Measurement voltage CAT III (max.)	600 V

Geometric Data	
Width	75 mm / 2.953 inch
Height	75 mm / 2.953 inch
Depth	155 mm / 6.102 inch

Material Data	
Weight	533.8 g

PU = packaging unit; SPU = subpackaging unit

Test Plug and Test Pin



Test plug; with 500 mm cable; 2 mm Ø; max. 42 V		
Color	Item No.	Pack. Unit
red	**210-136**	50



Test pin; with solder connection for test cable; 1 mm Ø		
Contact length	Item No.	Pack. Unit
6 mm	**735-500**	1
10 mm	**859-500**	1

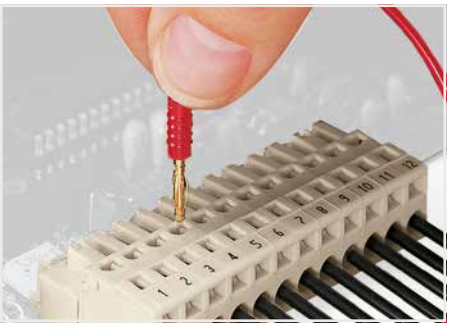

Testing via 2 mm Ø test plug.

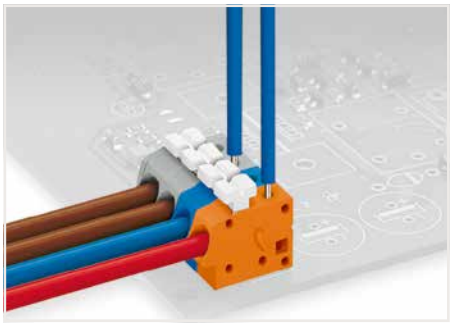

Testing via a 1 mm Ø test pin – touch contact.



Technical Section

Technical Section

		Page
	Operating WAGO Connection Technologies	1094
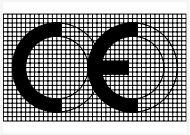	CE Marking and EC Directives	1096
	IEC/EN Specifications	1098
	Tests and Testing Procedures per IEC/EN Standards	
	– Mechanical Tests	1100
	– Electrical Tests	1106
	– Material Tests	1117
	– Environmental Tests	1118
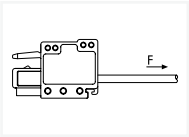	UL Specifications – Underwriters Laboratories, USA	1120
	– Tests and Testing Procedures per UL Standards	1121
	Processing Information and Material Specifications	
	– Soldering Information	1126
	– Insulation Materials	1126
	– Contact Materials, Contact Plating, Clamping Spring Material	1128
	General Technical Information on Electrical Equipment	
	Used in Hazardous Areas	1129
	– Special Requirements “Increased Safety Ex e”	1131
	– Special Requirements “Intrinsic safety Ex i”	1134
	International Certification Organizations – Overview	1138
	Electrical Engineering Laboratory	1140
	Product Safety for Our Customers	
	Accredited Test Laboratory	1141
	WAGO Seminars	1142
	Learn Today – Benefit Tomorrow	
	Benefit from First-Hand Knowledge and Expertise – Training Straight from the Source!	
	Environmental Protection	1144

Operating WAGO Connection Technologies

Please follow the applicable product-specific termination instructions.

PUSH-IN CAGE CLAMP®





The universal connection with an additional advantage: Push-in connection
Terminate solid and stranded (Class B 7 strands or less), as well as ferruled conductors, by simply pushing them in – no tools required.

Termination for all conductor types:
- Open clamping unit.
- Insert the conductor.
- Release clamp – done!



Push-in CAGE CLAMP® terminates the following copper conductors:
solid



stranded



fine-stranded, also with tinned single strands



fine-stranded, tip-bonded



fine-stranded, with ferrule (gastight crimped)



fine-stranded, with pin terminal (gastight crimped)

CAGE CLAMP®

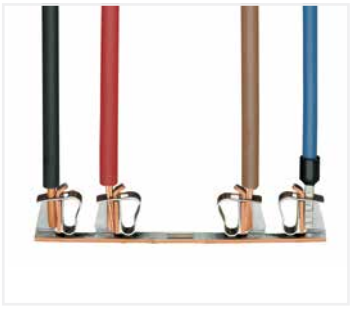

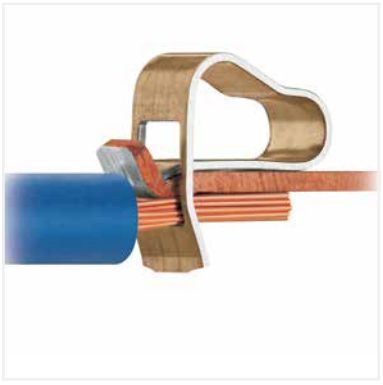

The universal connection for solid, stranded and fine-stranded conductors

Termination:
- Open clamping unit.
- Insert the conductor.
- Release clamp – done!



CAGE CLAMP® terminates the following copper conductors:
solid



stranded



fine-stranded, also with tinned single strands



fine-stranded, tip-bonded



fine-stranded, with ferrule (gastight crimped)



fine-stranded, with pin terminal (gastight crimped)

Operating WAGO Connection Technologies

Please follow the applicable product-specific termination instructions.

POWER CAGE CLAMP®







POWER CAGE CLAMP terminates the following copper conductors:
solid



stranded



fine-stranded, also with tinned single strands



fine-stranded, with ferrule (gastight crimped)

The universal connection for conductors larger than 35 mm² (2 AWG)

Termination:

- Open clamp by turning a T-wrench counter-clockwise.
- Press the integrated latch to open clamping unit for hands-free wiring.
- Insert the conductor.
- A small counter-clockwise rotation closes the clamp, securing conductor.

PUSH WIRE®

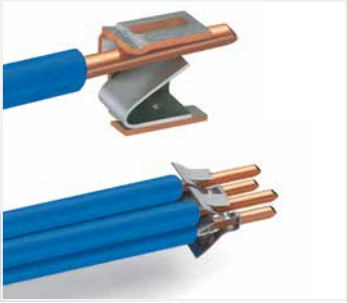

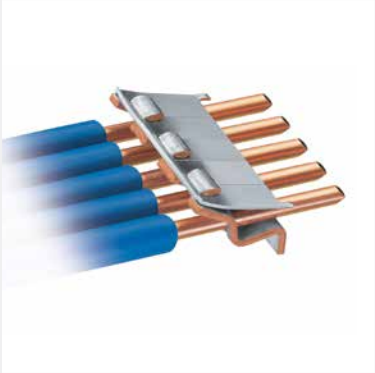



PUSH WIRE® terminates the following copper conductors:
solid

PUSH WIRE® connection for solid and stranded conductors (depending on the model used)

Termination:
Tool-free, twist-free terminations for solid and rigid stranded conductors – simply push into the unit.

CE Marking and EC Directives

CE Conformity Marking
The CE conformity marking consists of the characters "CE" with the following script:

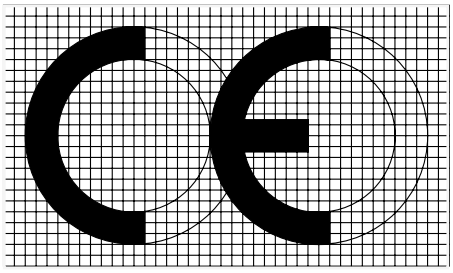

Communauté Européenne
(European Community)

WAGO Kontakttechnik GmbH & Co. KG products are developed, tested and marked in accordance with legally valid international standards and laws.
The CE mark is applied to products intended for the European domestic market; with it, manufacturers declare that the marked electrical equipment conforms with the applicable requirements set out in the Community harmonization legislation (EU Directives), which allows such equipment to carry this mark.
The original intention of this mark was to support the authorities in the EU member states in their market supervision, with the mark acting as a symbol of free movement of products within the EU. According to EC Directive 765/2008, a product can only be given the CE mark if the product requirements are defined in at least one appropriate EU directive. Examples of such directives are the Low Voltage Directive, the EMC Directive, the ATEX Directive, the Building Products Directive and the Machinery Directive. If more than one directive applies to a product, the product must comply with all applicable directives.
Only the basic requirements for achieving the defined aim of the directive are laid out in each respective directive. The individual technical details are specified according to the New Approach using lists with cross references to applicable standards (so-called harmonized standards).

1. Low Voltage Directive (LVD)
The safety of electrical equipment is guaranteed by the Low Voltage Directive (LVD). The LVD covers all electrical equipment operating with a voltage between 50 VAC and 1000 VAC and between 75 VDC and 1500 VDC.
Products falling within the scope of the Low Voltage Directive that are designed in such a way that they can be used in other electrical devices, and whose safety, for the most part, is dependant on how these components were built into the end product and what features the end product has, are defined as basic components in accordance with the Low Voltage Directive.
The LVD doesn't apply to basic components.
The RoHS Directive also applies to electrical equipment covered by the Low Voltage Directive. This directive regulates the use of hazardous substances in electrical devices and components, with the aim of reducing the quantity of problematic components in electrical waste. Details about the materials used by WAGO are available in our catalogs, on our product packaging and on our Web page.
2. EMC Directive
The EMC Directive stipulates that a product must meet the limits on radiated electromagnetic disturbance and also requires that a product must be immune to electromagnetic interference.
Electromagnetic passive components or components with no direct function, such as terminal blocks, resistors, diodes, capacitors, switching relays or cables (in the form of passive printed circuit boards) are not considered as apparatus within the meaning of the EMC Directive.

3. ATEX Directive on Explosion Protection
The ATEX Directive defines the rules for products (devices and protective systems) intended for use in hazardous locations. A number of products from WAGO are designed for use in hazardous areas.
Based on potential hazards, the ATEX Directive makes a distinction between three different equipment groups, of which Group II and III are subdivided into further zones. Suitability of WAGO products for the different groups and zones is outlined in the specific product documents (catalogs, Internet site, data sheets and product inserts).
These may be either devices that can be used as equipment in these types of areas, or components that are required for safe operation, but which do not fulfill a dedicated function. Such components include rail-mount terminal blocks for use in hazardous areas.
Products in both groups must comply with the ATEX Directive.
4. Radio Communications Directive
The Radio Communications Directive applies to all devices that properly transmit or receive radio waves for wireless communications and/or radio orientation. The basic safety requirements apply to the protection of health for humans and animals and to electrical safety in line with the Low Voltage Directive, but without the application of the voltage limit. In addition, the EMC protection goals of the EMC Directive must also be fulfilled and efficient use of radio frequencies ensured. WAGO products covered by the Radio Communications Directive indicate, in compliance with applicable laws, only the Radio Communication Directive in their EU Declaration of Conformity, as fulfillment of the Low Voltage Directive and of the EMC Directive is implicit in this declaration.

5. Construction Products Regulation
The Construction Products Regulation demands that structures be designed and constructed such that the safety of humans, property and animals is not endangered and that all applicable environmental protection requirements be considered. Here, building products are defined as products or construction sets which are produced to be built permanently into structures and which make a significant contribution to fulfilling the basic requirements for the structure.
In the unanimous opinion expressed by the German electrical industry, including WAGO Kontakttechnik GmbH & Co. KG, products used in general installation technology are not included among these types of building products and are therefore not covered by this directive.
6. Machinery Directive
The Machinery Directive applies to machines (complete or incomplete) which perform their functions by means other than direct human or animal work, or safety components for these types of machines.
Therefore, this directive usually does not apply to WAGO products.
The manufacturers of machines or systems are required by this directive to use safe products and components in their machines and systems. Directive-compliant production and safe operation is facilitated by the use of WAGO products, with their standard-compliant, up-to-date design.

Significance of CE Mark for WAGO Products
One, several or none of the EU Directives may apply to the various WAGO products. If none of the directives apply, the CE marking will not be affixed to the product, in line with applicable laws. Furthermore, a declaration of conformity must not be issued. All other products are provided with the CE mark – either directly on the product, on its packaging or in the documents included with the product – and a declaration of conformity is issued, or made accessible to the customer.
The data sheets of the technically sound products that, according to the regulations, are not CE marked will refer to the standards used in the development and type and manufacturing testing wherever possible.

IEC/EN Specifications

The following standards apply to the design and application of the terminal blocks and connectors contained in this catalog:

IEC 60364-1
HD 60364-1
VDE 0100-100
/ Erection of power installations with nominal voltages up to 1000 V
– Part 1: Fundamental principles, assessment of general characteristics, definitions
IEC 61140
EN 61140
VDE 0140-1
/ Protection against electric shock
– Common aspects for installation and equipment
IEC 60364-7-710
HD 60364-7-710
VDE 0100-710
– Part 7-710: Requirements for special installations or locations
– Medically used areas
IEC 60364-7-718
HD 60364-7-718
VDE 0100-718
– Part 7-718: Requirements for special installations or locations
– Communal facilities and workplaces
EN 50110-1
VDE 0105-1
/ Operation of electrical installations
– Part 1: General requirements
IEC 60664-1
EN 60664-1
VDE 0110-1
/ Insulation coordination for equipment within low-voltage systems
– Part 1: Principles, requirements and tests
IEC 60204-1
EN 60204-1
VDE 0113-1
/ Safety of machinery – Electrical equipment of machines
– Part 1: General requirements
IEC 60079-0
EN 60079-0
VDE 0170-1
/ Harzardous areas
Part 0: Equipment
– General requirements
IEC 60079-7
EN 60079-7
VDE 0170-6
/ Explosive atmospheres
– Part 7: Equipment protection by increased safety "e"
IEC 60079-11
EN 60079-11
VDE 0170-7
/ Harzardous areas
– Part 11: Equipment protection by intrinsic safety "i"
IEC 60079-14
EN 60079-14
VDE 0165-1
/ Harzardous areas
– Part 14: Electrical installations design, selection and erection
IEC 60079-15
EN 60079-15
VDE 0170-16
/ Explosive atmospheres
– Part 15: Equipment protection by type of protection "n"
IEC 60038
EN 60038
VDE 0175-1
/ IEC CENELEC standard voltages
VDE 0298-4
/ Use of cables and insulated conductors in power installations
– Part 4: Recommended values for current carrying capacities of cables for fixed installation and for flexible cables
IEC 60112
EN 60112
VDE 0303-11
/ Method for determining the comparative and the proof tracking indices of solid insulation materials
IEC 60529
EN 60529
VDE 0470-1
/ Degrees of protection provided by enclosures (IP Code)
– Testing equipment and testing method
IEC 61439-1
EN 61439-1
VDE 0660-600-1
/ Low-voltage switchgear and control-gear assemblies
– Part 1: General rules
IEC 61439-3
EN 61439-3
VDE 0660-600-3
/– Low-voltage switchgear assemblies
– Part 3: Distribution boards intended to be operated by ordinary persons (DBO)
IEC 61643-11
EN 61643-11
VDE 0675-6-11
/ Low-voltage surge protective devices
– Part 11: Surge protective devices connected to low-voltage power systems
– Requirements and test methods
IEC 60335-1
EN 60335-1
VDE 0700-1
/ Safety of household and similar electrical appliances
– Part 1: General requirements
IEC 60598-1
EN 60598-1
VDE 0711-1
/ Lighting fixtures
– Part 1: General requirements and tests
IEC 60715
EN 60715
/– Standardized mounting on rails for mechanical support of electrical devices in switchgear and control-gear installations
IEC 60999-1
EN 60999-1
VDE 0609-1
/ Connecting devices – Electrical copper conductors – Safety requirements for screw-type and screwless-type clamping units
– Part 1: General requirements and particular requirements for clamping units for conductors from 0.2 mm² up to 35 mm²
IEC 60999-2
EN 60999-2
VDE 0609-101
– Part 2: General requirements and particular requirements for clamping units for conductors from 35 mm² up to 300 mm²

IEC 60998-1
EN 60998-1
VDE 0613-1
/ Connecting devices for low-voltage circuits for household and similar purposes
– Part 1: General requirements
IEC 60998-2-1
EN 60998-2-1
VDE 0613-2-1
– Part 2-1: Particular requirements for connecting devices as separate entities with screw-type clamping units
IEC 60998-2-2
EN 60998-2-2
VDE 0613-2-2
– Part 2-2: Particular requirements for connecting devices as separate entities with screwless-type clamping units
IEC 60998-2-3
EN 60998-2-3
VDE 0613-2-3
– Part 2-3: Particular requirements for connecting devices as separate entities with insulation-piercing clamping units
IEC 60947-1
EN 60947-1
VDE 0660-100
/ Low-voltage switchgear and controlgear
– Part 1: General rules
IEC 60947-7-1
EN 60947-7-1
VDE 0611-1
– Part 7-1: Ancillary equipment
Terminal blocks for copper conductors
IEC 60947-7-2
EN 60947-7-2
VDE 0611-3
– Part 7-2: Ancillary equipment
Ground conductor terminal blocks for copper conductors
IEC 60947-7-3
EN 60947-7-3
VDE 0611-6
– Part 7-3: Ancillary equipment
Safety requirements for fuse terminal blocks

IEC 60947-7-4
EN 60947-7-4
VDE 0611-4
– Part 7-4: Ancillary equipment –
PCB terminal blocks for copper conductors
IEC 61984
EN 61984
VDE 0627
/ Connectors
– Safety requirements and tests
IEC 60512-1
EN 60512-1
/ Connectors for electronic equipment
Equipment
– Measurement and test procedures
– Part 1: General
IEC 60320-1
EN 60320-1
VDE 0625-1
/ Appliance couplers for household and similar general purposes
– Part 1: General requirements
IEC 60352-1
EN 60352-1
/ Solderless connections;
– Part 1: Wrapped connections
– General requirements
Test methods and practical guidance
IEC 60352-2
EN 60352-2
/ Solderless connections;
– Part 2: Crimped connections
– General requirements
Test methods and practical guidance
IEC 60352-3
EN 60352-3
– Part 3: Solderless accessible insulation displacement connections
– General requirements
Test methods and practical guidance
IEC 60352-4
EN 60352-4
– Part 4: Solderless non-accessible insulation displacement connections
– General requirements
Test methods and practical guidance

IEC 60352-5
EN 60352-5
– Part 5: Press-in connections
– General requirements
Test methods and practical guidance
IEC 60352-6
EN 60352-6
– Part 6: Insulation piercing connections
– General requirements
Test methods and practical guidance
IEC 60352-7
EN 60352-7
– Part 7: Spring clamp connections
– General requirements
Test methods and practical guidance

Tests and Testing Procedures per IEC/EN Standards

Products such as connecting devices, rail-mount terminal blocks and connectors, etc., have their own product-specific test specifications. The following sections describe the most important tests and are limited to a description of the test procedures and an explanation of the test purpose. The data shown (e.g., voltages, temperatures, forces) only serve as illustration and may differ depending on the test.

Mechanical Tests

All WAGO products meet requirements for the following mechanical tests:

- Termination Requirements

Conductor Termination
Two WAGO connection systems are proven in the field of Spring Pressure Connection Technology:
The PUSH WIRE® connection for applications requiring solid conductors (e.g., for lighting and building wiring, telecommunications, house communication or alarm systems).
Conductor range:
0.2 … 4 mm² / 24 … 12 AWG
The universal CAGE CLAMP® spring pressure connection system for solid, stranded and fine-stranded conductors, designed for a variety of industrial, electrical and electronic applications (e.g., fine-stranded conductors in the elevator industry, in power stations, in the chemical and automotive industry, and aboard ships).
Conductor range:
0.08 … 35 mm² (28 … 2 AWG)

The Push-in CAGE CLAMP® connection takes universal CAGE CLAMP® connections further by allowing the termination of 0.2 … 16 mm² (24 … 6 AWG) solid, stranded and fine-stranded conductors (25 mm²/4 AWG only "f-st") and offering all the benefits and safety of the original CAGE CLAMP®. Furthermore, the Push-in CAGE CLAMP® connection technology allows solid, stranded and fine-stranded conductors with ferrules from 0.5 to 16 mm² (20 … 6 AWG) to be terminated by simply pushing them in.
The conductor entry hole is perfectly suited for the insulation diameter of the rated conductor cross section, thus providing good conductor guidance.

This is particularly important for vibration-prone applications.
Fine-stranded conductors of small or very small size are highly flexible, and deform when pushed against the conductor stop in terminal blocks. As a result, the conductor insulation – not the copper conductor – may be clamped, causing intermittent contact or no contact at all. In order to prevent conductor insulation from being inserted into the clamp, insulation stops are available for WAGO rail-mount terminal blocks up to 4 mm² (12 AWG), even providing protection for 0.08 mm² (28 AWG) conductors (see Section 5).

Rated Cross Sections and Connectable Conductors
I. Per IEC 60999-1 / EN 60999-1 / VDE 0609-1, Table 1:

Rated Cross Section	Theoretical Largest Conductor Diameter							Connectable Conductor	
	Metric			AWG					
	Rigid		Flexible	Rigid			Flexible	Rigid	Flexible
	Solid	Stranded			[b] Solid	[b] Class B Stranded	[c] Class I, K, M Stranded	To be defined in the corresponding product standard	
mm²	mm	mm	mm	Conductor Size	mm	mm	mm		
0.2	0.51	0.53	0.61	24	0.54	0.61	0.64		
0.34	0.63	0.66	0.8	22	0.68	0.71	0.8		
0.5	0.9	1.1	1.1	20	0.85	0.97	1.02		
0.75	1	1.2	1.3	18	1.07	1.23	1.28		
1	1.2	1.4	1.5	–	–	–	–		
1.5	1.5	1.7	1.8	16	1.35	1.55	1.6		
2.5	1.9	2.2	2.3[a]	14	1.71	1.95	2.08		
4	2.4	2.7	2.9[a]	12	2.15	2.45	2.7		
6	2.9	3.3	3.9[a]	10	2.72	3.09	3.36		
10	3.7	4.2	5.1	8	3.34	3.89	4.32		
16	4.6	5.3	6.3	6	4.32	4.91	5.73		
25	–	6.6	7.8	4	5.45	6.18	7.26		
35	–	7.9	9.2	2	6.87	7.78	9.02		

NOTE: The diameters of the largest rigid and flexible conductors are based on Table 1 of IEC 60228 A/IEC 60344 and on ASTM B172-71 [4], IECA Publication S-19-81 [5], IECA Publication S-66-524 [6], as well as IECA Publication S-66-516 [7] for AWG conductors.
[a] Dimensions for Class 5 flexible conductors only (IEC 60228 A)
[b] Nominal diameter +5%
[c] Largest diameter for conductors of classes I, K, M + 5%
In practical use, the conductor cross sections are approximately 5% below the values stated in the table!

The IEC 60999-1/EN 60999-1/VDE 0609-1 Specification (Section 7.1) requires that:
Clamping units must be able to connect unprepared conductors.
Under normal operating conditions, direct clamping (i.e., directly connecting a conductor to the terminal block's current bar) provides optimal contact quality, because all risk factors arising from anti-splaying methods are prevented.

Occasionally, conductor anti-splaying protection may be required, including various methods (see illustrations below).
Special requirements apply only in special application areas exposed to extremely corrosive atmospheres.
In this case, we recommend using either solid copper conductors or fine-stranded copper conductors with properly crimped, tin-coated copper ferrules or copper pin terminals.

II. Per IEC 60999-2, Table 1:

Rated Cross-Section	Theoretical Largest Conductor Diameter					Connectable Conductor	
	Metric		AWG/kcmil				
	Rigid Stranded	Fine-Stranded [a)]	Gauge	Rigid Stranded	Fine-Stranded		
mm²	mm	mm		mm	mm	Rigid	Flexible
50	9.1	11	1/0	9.64	12.08	To be defined in the corresponding product standard	
70	11	13.1	2/0	11.17	13.54		
95	12.9	15.1	3/0	12.54	15.33		
–	–	–	4/0	14.08	17.22		
120	14.5	17	250	15.34	19.01		
150	16.2	19	300	16.8	20.48		
185	18	21	350	18.16	22.05		
–	–	–	400	19.42	24.05		
240	20.6	24	500	21.68	26.57		
300	23.1	27	600	23.82	30.03		
Dimensions for Class 5 flexible conductors only (IEC 60228 A)							
NOTE: The diameters of the largest rigid and flexible conductors are based on Table 1 and Table 3 of IEC 3 A/IEC 60228 and on ASTM B172-71 [1], IECA Publication S-19-81 [2], IECA Publication S-66-524 [3], as well as IECA Publication S-66-516 [7] for AWG conductors.							



Tip-bonded conductor



Tin-plated copper ferrule (gas-tight crimped)



Ultrasonically bonded conductor



Crimped pin terminal (gas-tight), preferably made of copper with a tin-plated surface

Anti-splaying methods require a terminal block one size larger than the nominal cross section of the conductor to be terminated.
Ferruled conductor cross sections specified for individual products are based on WAGO's Varioocrimp square crimping technology.
Gas-tight, crimped twin ferrules may be used, provided the ferrule is inserted all the way into the clamping unit and that there is a sufficient clearance and creepage distance between adjacent potentials.

As with solid copper conductors, the fine strands are crimped to a dense inner core. This prevents ingress of aggressive atmospheres (depending on the ppm concentration), which can diffuse into the conductor bundle along the individual strands and deposit between individual strands and the clamping point.
One Conductor per Clamping Unit
A number of DIN VDE, EN, IEC directives mandate or recommend that only one conductor must be connected per clamping unit.
In accordance with DIN VDE 0611, Part 4, 02.91, Section 3.1.9, multi-level distribution rail-mount terminal blocks must be dimensioned so that a single (solid, stranded or fine-stranded) conductor of the nominal cross section can be connected at each terminal point.
Other VDE, EN and IEC specifications also recommend the connection of only one conductor per clamping unit, unless the clamping unit is specifically tested and approved for the connection of several conductors, for example:
VDE 0609, Part 1, 12.00 / EN 60999-1:2000/ IEC 60999-1:1999, Section 7.1
VDE 0660, Part 600, 06.12 / EN 61439-1:2011 / IEC 61439-1, Section 8.6.3
VDE 0113, Part 1, 06.07 / EN 60204-1:2006 / IEC 60204-1:2016, Section 13.1.1.
One conductor per clamping unit is therefore recommended to meet the safety requirements of these relevant specifications. This WAGO principle is the basis for a number of other technical and economic advantages:

- Each conductor may be terminated or removed without affecting previously connected conductors.
- Where re-wiring is required, only the conductor to be changed is removed from the clamping point, all other conductors remain safely clamped.
- Each conductor is clamped independently.
- Any conductor size combination can be connected.

WAGO provides 2-conductor terminal blocks and connectors to increase the number of clamping units.

Tests and Testing Procedures per IEC/EN Standards (continued)
Mechanical Tests (continued)

▪ Pull-Out Test per IEC/EN 60947-7-1, IEC/EN 60998-2-2, IEC/EN 60999-1

The pull-out test simulates the mechanical stress on the clamping unit when, for example, the installer pushes the conductor aside to better access/ operate the adjacent clamping unit, or verifies if the conductor is connected properly by briefly pulling on it.
During the test, a pulling force is applied without jerking, for one minute, to the connected conductor. The pulling force is selected according to the cross-sectional area. The larger the cross section of the conductor, the higher the pull-out force that is selected. For example, the pulling force is 40 N for a conductor having a cross section of 1.5 mm² (16 AWG) and 100 N for a conductor with a cross section of 16 mm² (6 AWG). The values specified by these standards are the same for both screw clamp and spring clamp terminal blocks. During the test, the conductor must neither slip out of the clamping unit, nor break near the clamping unit.

Conductor Pull-Out Forces
The clamping units of screwless terminal blocks must withstand the pull-out forces as follows:
IEC 60947-1/EN 60947-1/VDE 0660-100, Table 5:
Low-voltage switchgear and controlgear, general rules
IEC 60947-7-1/EN 60947-7-1/
VDE 0611-1, rail-mount terminal blocks for copper conductors
IEC 60998-2-1/EN 60998-2-1/
VDE 0613-2-1, Table 104:
IEC 60998-2-2/ EN 60998-2-2
VDE 0613-2-2, Table 103:
Connecting devices for low-voltage circuits for household and similar purposes
Particular requirements for connecting devices as separate entities with screw-clamp or screwless terminal blocks.
IEC 60999-1/EN 60999-1/VDE 0609-1, Table 3:
IEC 60999-2/EN 60999-2/VDE 0609-101, Table 2:
Safety requirements for screw-clamp and screwless clamping units for electrical copper conductors

Rated Cross-Section		Pull-Out Forces per IEC/EN		
		60947-7-1	60998-2-2	60999-1/-2
mm²	AWG/kcmil	N	N	N
0.2 0.34	24 22	10 15	10 15	10 15
0.5 0.75	20 18	20 30	20 30	20 30
1 1.5	– 16	35 40	35 40	35 40
2.5 4	14 12	50 60	50 60	50 60
6 10	10 8	80 90	80 90	80 90
16 25	6 4	100 135	100 135	100 135
– 35	3 2	156 190	190	190
– 50	1 1/0	236 236		236
70 95	2/0 3/0	285 351		285 351
– 120	4/0 250	427 427		427 427
150 185	300 350	427 503		427 503
– 240	400 500	503 578		503 578
300	600	578		578

- Shock/Vibration Test per IEC/EN 60068-2-6; DNV GL, LR (Marine Applications); IEC/EN 61373 (Railway Applications)

The vibration test determines whether vibrations, such as those produced in the vicinity of machines or in vehicles, will permanently affect the electrical connection, or if contact breaks will occur during vibrations. Using a vibration table, the test specimen is subjected to vibration in each of the X, Y and Z axes (see pictures). The amplitude, acceleration and in particular the frequency of the vibration must vary during the test.
The "open length" of the conductor up to the point where the conductor is attached in the application must be kept as short as possible (length = 70 mm in this example).

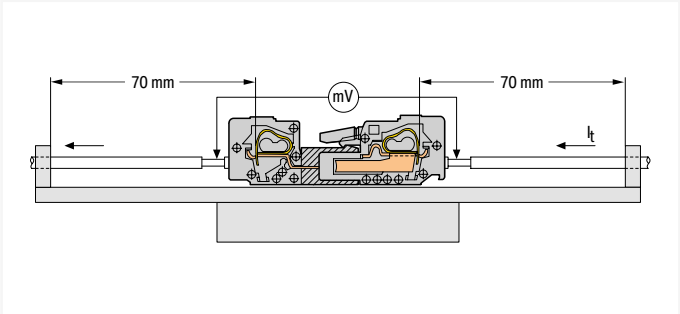

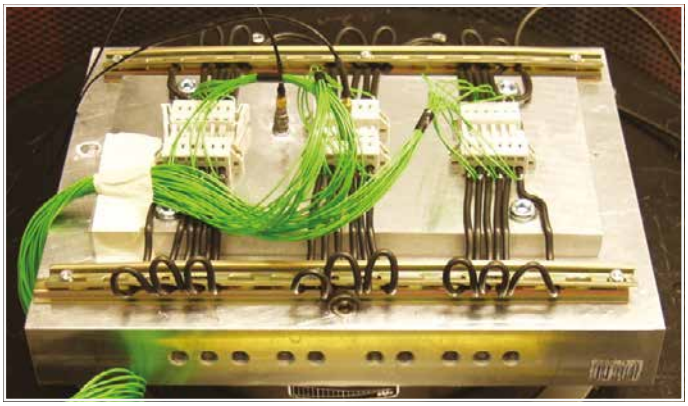

1st Axis

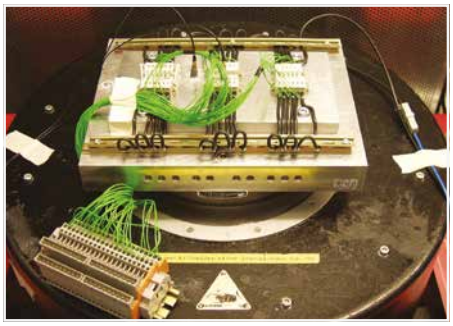

2nd Axis

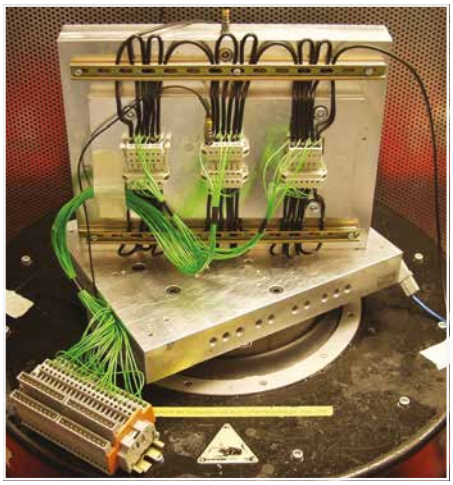

3rd Axis

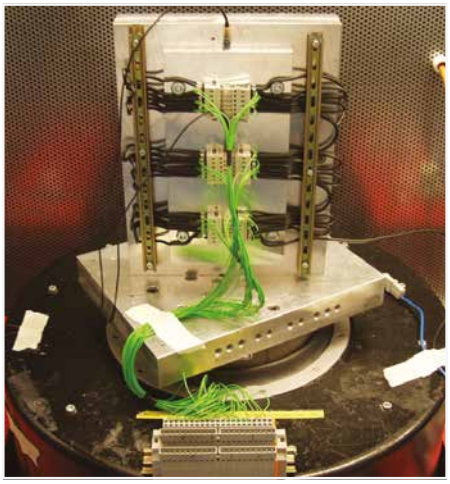

The exact test procedure may vary considerably, depending on how the product will be used.

Application Examples per IEC/EN 60068-2-6	Associated Test Levels	
Devices attached to heavy, rotating machines	1 ... 35 Hz,	50 m/s² (5 g) or 100 m/s² (10 g)
Devices designed for use in large-scale power plants and general industrial applications	10 ... 55 Hz,	20 m/s² (2 g) 50 m/s² (5 g)
Devices designed for use in large-scale power plants and general industrial applications if it has been determined that detectable vibration components greater than 55 Hz exist	10 ... 150 Hz,	20 m/s² (2 g) 50 m/s² (5 g)

Tests and Testing Procedures per IEC/EN Standards (continued)

Mechanical Tests (continued)

Beyond these standard procedures, each market segment performs additional testing. Examples include railway authorities testing rolling electrical equipment, or the testing performed multiple marine agencies (e.g., DNV GL Group, Lloyd's Register of Shipping). Though the requirements of such testing procedures are particularly demanding, test arrangements are identical for all of them. During vibrations, possible contact breaks are monitored on an oscilloscope. Voltage drop is measured before and after the test to detect permanent failures, i.e., checking if electrical resistance at the clamping unit has not increased beyond the permissible limit. The smaller this value is, the smaller the contact resistance of the clamping unit.
The test is passed if:
- the conductor has neither slipped out of the terminal block nor been damaged,
- the maximum permissible voltage drop has not been exceeded
- and neither contact breaks have occurred nor a defined break time has been exceeded.

The test specimen must not be damaged in any way that might affect future use.
Since their inception, both CAGE CLAMP® and Push-in CAGE CLAMP® connections have been routinely tested for their resistance to shock/vibration in connection with approval tests.
Notes:
These test results are based solely on tests conducted under "laboratory conditions." Connector usage in actual applications must be evaluated by the user.

▪ Shock Test per IEC/EN 60068-2-27; IEC/EN 61373 (Railway Applications)

The shock test is similar to the vibration test except that, instead of continuous vibrations, single shocks are applied to the specimen. Shock tests are usually performed with an acceleration of 20g, for example, over a period of 11 ms. Tests for special requirements often call for much higher values. Like the vibration tests, shock tests are primarily used to test the voltage drop variation or contact breaks, etc.

Example: Shock requirement
per IEC/EN 60068-2-27 (half-sine shock)
30g acceleration, 6 ms duration
Shock direction: 3 axes (3 shocks each in positive and negative direction)

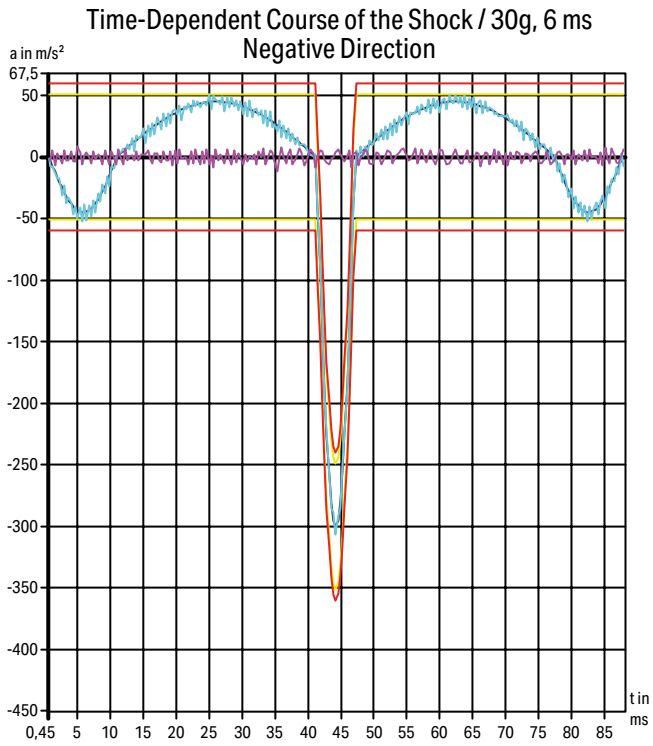

Status: Stop
Cause: Number of shocks ready!

Date: 30.04.2009 Control: active
Time: 07:27:59 Total number of shocks: 3
Modulation: 42 % Shocks processed: 3
Warning limits: inactive Top acceleration: 306.71 m/s²
Turn-off limits: inactive Speed: 1.13 m/s

Legend:

Upper warning limits | Lower warning limits | Upper turn-off limits | Lower turn-off limits
Set acceleration curve | Actual acceleration curve | Measured acceleration curve

RMS - SWR 900 - Testmanager Test file: 68-2-27.SHO (Shock)

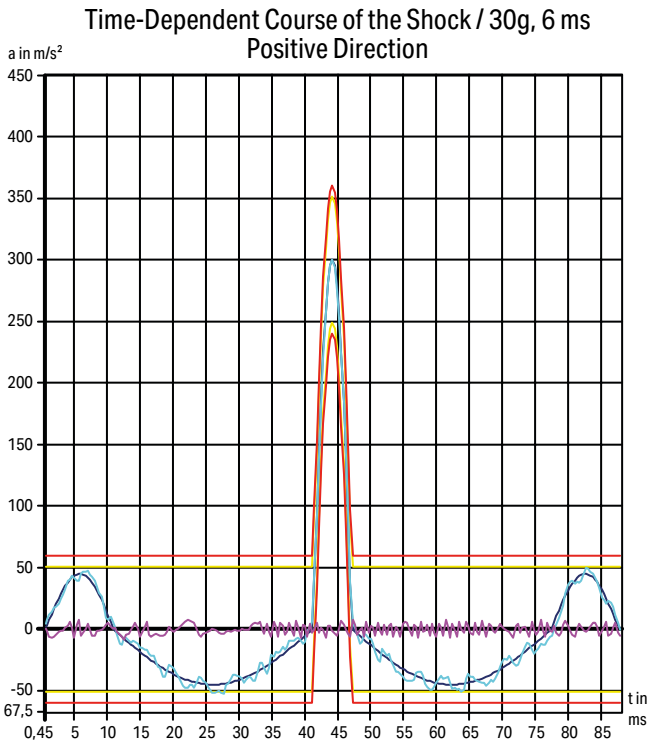

Status: Stop
Cause: Number of shocks ready!

Date: 30.04.2009 Control: active
Time: 07:26:38 Total number of shocks: 3
Modulation: 43.1 % Shocks processed: 3
Warning limits: inactive Top acceleration: 305.74 m/s²
Turn-off limits: inactive Speed: 1.13 m/s

Legend:

Upper warning limits | Lower warning limits | Upper turn-off limits | Lower turn-off limits
Set acceleration curve | Actual acceleration curve | Measured acceleration curve

RMS - SWR 900 - Testmanager Test file: 68-2-27.SHO (Shock)

Tests and Testing Procedures per IEC/EN Standards (continued)

Electrical Tests

All WAGO products meet requirements for the following electrical tests:

- Temperature-Rise Test per IEC/EN 61984, IEC/EN 60947-7-4, IEC/EN 60947-7-1, IEC/EN 60998-1

The temperature-rise test examines the clamping unit – including the surrounding insulation – at rated current, over-current and short-circuit current levels.
Unless otherwise specified in the related equipment specification, e.g., by specifying the nominal currents of the equipment, terminal blocks and connectors are tested with current loads as specified in the respective construction specification.
For rail-mount terminal blocks complying with IEC 60947-7-1/EN 60947-7-1/VDE 0611-1, or terminal blocks complying with IEC 60998-1/EN 60998-1/ VDE 0613-1, the temperature rise must not exceed 45 Kelvin.
Connectors and PCB terminal blocks must withstand the upper and lower values of the temperature range as specified in the detail or manufacturer's specification.
The sum of the surrounding air temperature and the temperature rise of a connector or PCB terminal strip must not exceed the upper temperature limit.

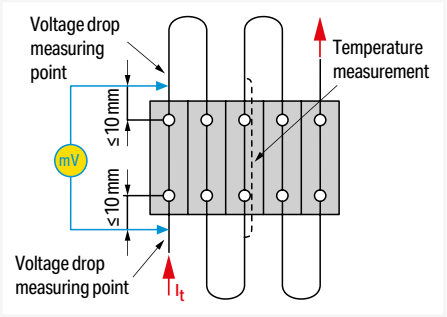

Test arrangement: "Temperature-Rise Test"

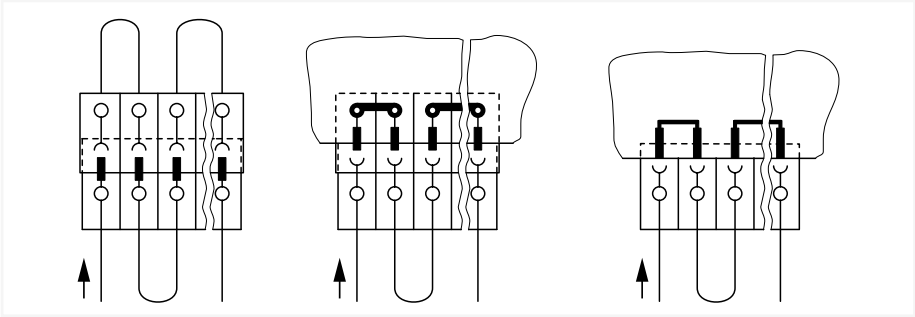

Test arrangement: "Temperature-Rise Test" per IEC/EN 61984

Rated Cross-Section	Test Current per IEC/EN	
	60947-7-1 Table 4	60998-1 Table 2
mm²	A	A
0.2 0.34	4 5	4 5
0.5 0.75	6 9	6 9
1 1.5	13.5 17.5	13.5 17.5
2.5 4	24 32	24 32
6 10	41 57	41 57
16 25	76 101	76 101
35 –	125	125
50 70	150 192	
95 –	232	
120 150	269 309	
185 240	353 415	
300	520	

Conductor Size	Test Current per IEC/EN
	60947-7-1 Table 5
AWG/kcmil	A
24 22	4 6
20 18	8 10
– 16	 16
14 12	22 29
10 8	38 50
6 4	67 90
2 1	121 139
1/0 2/0	162 185
3/0 4/0	217 242
250 kcmil 300 kcmil	271 309
350 kcmil 500 kcmil	353 415
600 kcmil	520

▪ Current-Carrying Capacity Curve (Derating Curve) per EN 60512-5-2

Both the design requirements (e.g., dimensions) and the current-carrying capacity of a connector must be checked by the user when selecting connectors.
This information depends on the following factors: conductor size, surrounding air temperature, number of simultaneously loaded poles, internal resistance of the connector, PCB layout, width and thickness of the printed circuits and connector materials.
A current-carrying capacity curve (basic curve) is determined based on the EN 60512-5-2 standard, accounting for the upper temperature limit.
The relationship between current, surrounding air temperature and temperature rise up to the connector's upper temperature limit is illustrated via current-carrying capacity curve (derating curve, reduction factor: 0.8).
The connector must only be operated up to this temperature limit (sum of the self-generated heat and the surrounding air temperature) without being damaged or destroyed during operation.
The nominal current figures given for the WAGO PCB Connectors are based on the maximum number of poles, the maximum conductor cross section and a maximum temperature rise of 45 K.
Note: Current-carrying capacity curves merely document the self-generated heat of the connectors and terminal blocks under defined test conditions (conductor length, commoning of solder pins).
Usability of the components in actual applications must be investigated by the user.
Functioning of a current-carrying capacity curve (derating curve) per EN 60512-5-2 is shown by an application using a derating curve for the *MULTI CONNECTION SYSTEM*:
This application requires each pole of a 4-pole connector be subjected to a load of 20 A. Based on the derating curve determined for this pole number with a conductor cross section of 2.5 mm², it has been determined the maximum surrounding air temperature is 39°C (102.2°F). The current must be reduced at higher surrounding air temperatures, e.g., to 11 A at an surrounding air temperature of 70°C (158°F).

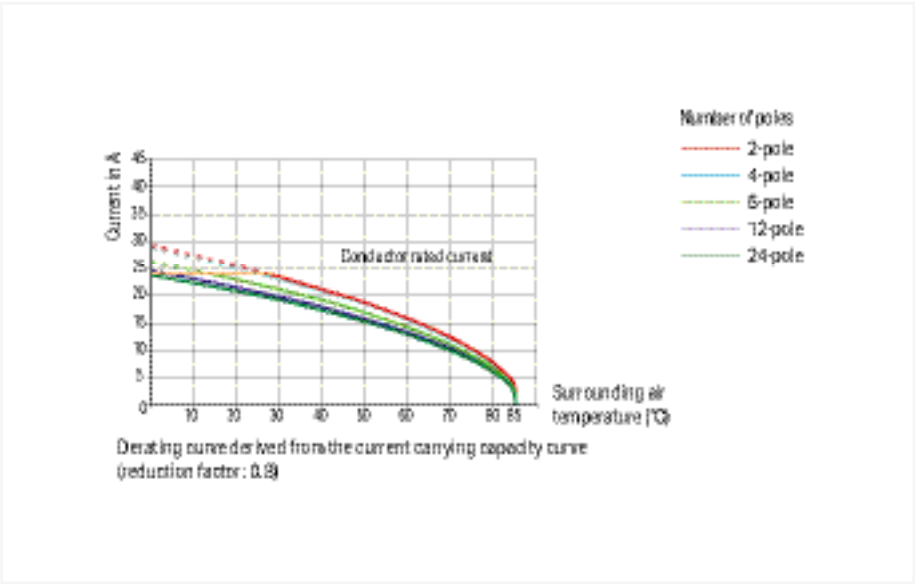

Derating curve derived from the current carrying capacity curve (reduction factor: 0.8)

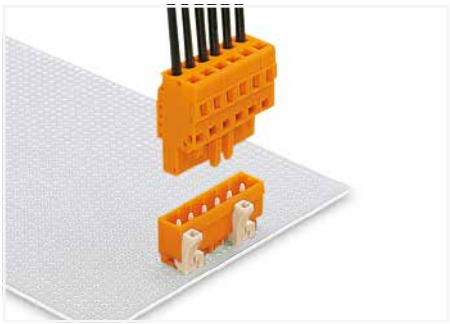
Male header with straight solder pins
Female connector with CAGE CLAMP®

The non-reduced current-carrying capacity curves (basic curves, reduction factor: 1) can be used when selecting WAGO's PCB terminal blocks!
The nominal current values given are based on a 4-pole PCB terminal strip with a temperature rise of 45 K.


Example: 4-pole PCB terminal strip (2706 Series)

Tests and Testing Procedures per IEC/EN Standards (continued)
Electrical Tests (continued)

- Voltage Drop Test per IEC/EN 60947-7-1, IEC/EN 60999-1

The voltage drop test evaluates clamping point quality under stress such as vibration, temperature change, industrial climate and salt spray, in order to verify that the contact point is gas-tight.

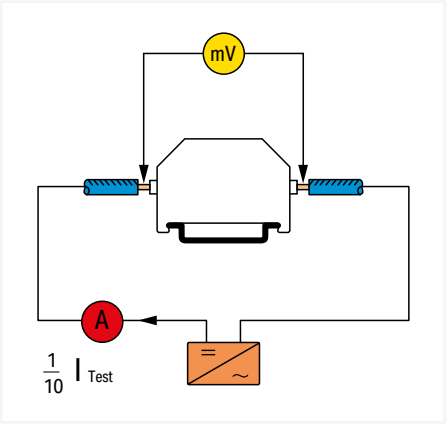

Test arrangement: "Voltage Drop Test"

Example: Current load cycling test result for Combi PCB terminal blocks with IDC and PUSH WIRE® connections
Voltage drop variation over longer periods under current load cycling conditions is shown for 251-3xx Combi PCB Terminal Blocks using solid copper conductors. The diagram shows that the voltage drop is constant, far beyond the 192 cycles required in IEC/EN 60998-2-2.

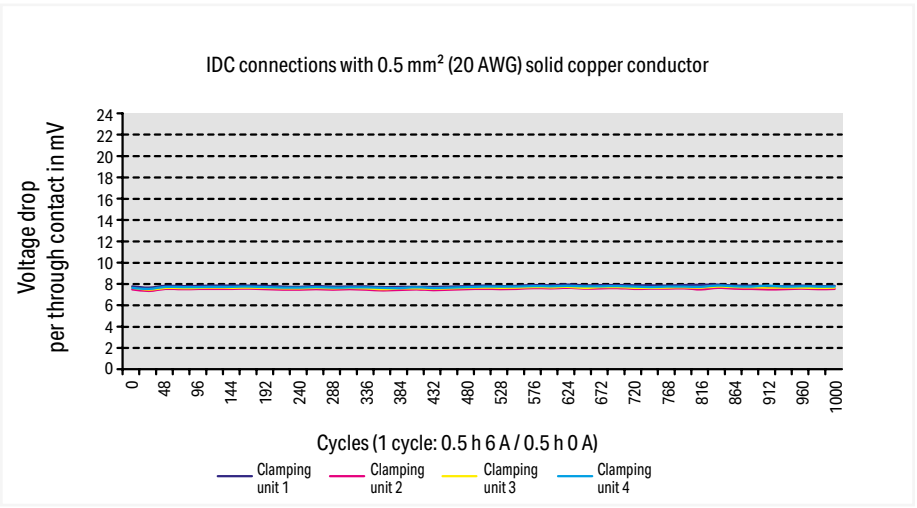

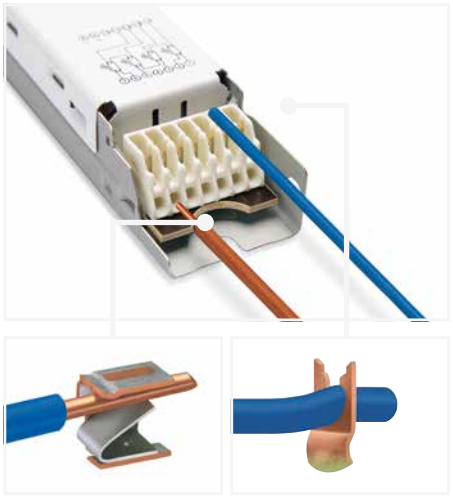

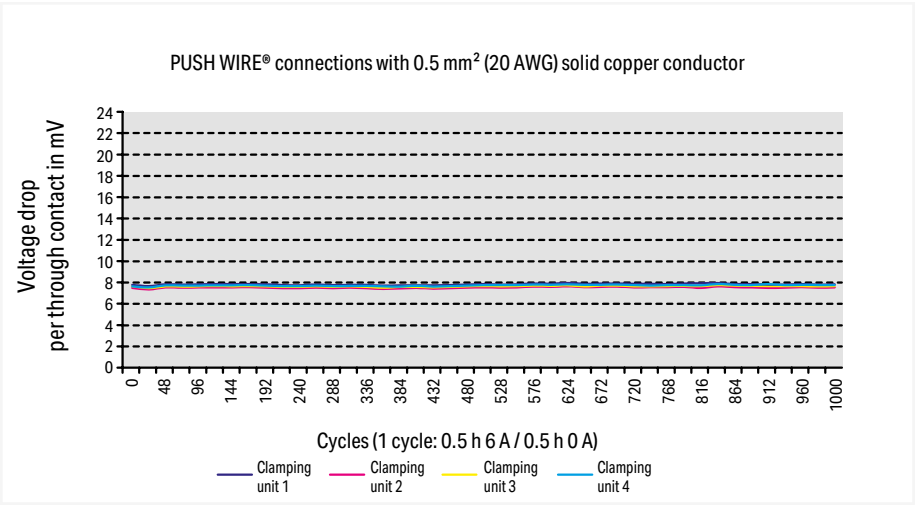

The voltage drop was determined at the rated current.

▪ Minimum Current / Specialty Connector Applications

The contact surfaces of WAGO's connectors are tin-plated. This surface exhibits excellent conductivity, along with outstanding protection against corrosion. However, during insertion, the contacts will penetrate any contamination that may have settled on this pure tin coating, leading to low contact resistance.
The following information regarding proper selection of suitable WAGO components should be considered for applications in which connectors are used with minimal current and voltage levels and under harsh conditions, involving, for example, temperature, aggressive gases, vibration and shock. Signal corruption may occur in applications with minimal current and voltage levels under the special conditions cited above. In such cases, we recommend using gold-plated contacts. Here, the user must always examine the suitability of the connectors for the application at hand.
The diagram below is based on practical experience.

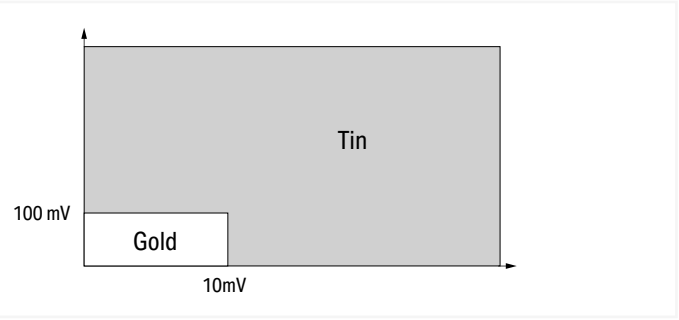

WAGO also offers connectors with gold-plated contacts upon request.

Tests and Testing Procedures per IEC/EN Standards (continued)
Electrical Tests (continued)

▪ Insulation Parameters per IEC/EN 60664-1

Clearances and Creepage Distances
The following generally applies:
The equipment specification contains data for the measurement of clearances and creepage distances, or refers to the data contained in the new revised edition of the basic standard DIN EN 60664-1/VDE 0110-1.
This standard contains new clearances and creepage distances in compliance with insulation coordination requirements. That is, the insulation parameters of equipment are assigned to:
- the anticipated surge voltages
- the parameters of the protection device against impulse voltage
- the anticipated environmental conditions and the protection measures against pollution.

This standard is based on IEC 60604-1.

Overvoltage Categories for Electrical Equipment:
A specific overvoltage category must be defined on the basis of the following, general description:
- Equipment in overvoltage category I is intended to be connected to the fixed electrical installations of buildings. Protective means are taken outside the equipment – either in the fixed installation or between the fixed installation and the equipment – to limit transient overvoltages to the specific level.
- Equipment in overvoltage category II is to be connected to the fixed electrical installations of buildings.
  Note: Examples of such equipment are household appliances, portable tools and similar loads.
- Equipment in overvoltage category III is part of the fixed electrical installations and other equipment where a higher degree of availability is expected.
  Note: Examples of such equipment are distribution boards, circuit breakers, wiring systems (IEV 826-16-08, including cables, bus bars, junction boxes, switches, socket outlets) in the fixed installation and equipment for industrial use and other equipment, e.g., stationary motors with permanent connection to the fixed installation.
- Equipment in overvoltage category IV is for use in or near the feed-in of electrical building installations upstream of the main distribution board in the direction of the network.
  Note: Examples include electricity meters, primary overcurrent protection devices and ripple control units.

Clearances, Rated Surge Voltages, Overvoltage Categories, Pollution Degrees
Surge voltages (Table 1) are a decisive factor in determining clearances.
The basis forms the overvoltage category, i.e., the allocation of the equipment to the expected overvoltage, and the conductor-ground voltage derived from the nominal mains voltage in installations with a grounded Y (star) point.
In ungrounded installations, or installations where the conductor is not grounded, the voltage between conductors is applicable in the same way as conductor voltage to ground.

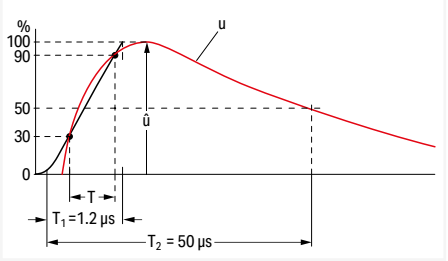

Voltage pulse: 1.2/50 µs per EN 60060-1/VDE 0432-1

The rated surge voltage must be selected from Table F.1 corresponding to the overvoltage category specified and to the rated voltage of the equipment.
Table F.1 – Rated Surge Voltage for Equipment Energized Directly from the Low-Voltage Mains (DIN EN 60664-1/VDE 0110-1)
Voltage Curve: 1.2/50 µs per IEC 60060-1/VDE 0432-1

Nominal voltage of the power supply system[1] (mains) per IEC 60038[3]		Conductor-to-neutral voltage, derived from the nominal AC or DC voltage up to and including:	Rated surge voltage[2] Overvoltage category[4]			
Three-phase V	Single-phase V	V	I V	II V	III V	IV V
		50	330	500	800	1500
		100	500	800	1500	2500
	120 ... 240	150[5]	800	1500	2500	4000
230 / 400 277 / 480		300	1500	2500	4000	6000
400 690		600	2500	4000	6000	8000
1000		1000	4000	6000	8000	12000

[1] See Annex B for application to existing different low-voltage mains and their nominal voltages.
[2] Equipment with these rated impulse voltage levels can be used in installations complying with IEC 60364-4-443.
[3] The / mark indicates a 3-phase, 4-conductor system. The lower value is the conductor-to-neutral voltage, while the higher value is the conductor-to-conductor voltage. Where only one value is indicated, it refers to 3-phase, 3-conductor systems and specifies the conductor-to-conductor voltage.
[4] See 4.3.3.2.2 for an explanation of the overvoltage categories.
[5] The nominal voltages for single-phase systems in Japan are 100 V or 100 ... 200 V. The value for the rated impulse voltage is, however, derived from the voltage gaps conductor-to-neutral for a voltage level of 150 V (see Annex B).

The nominal supply voltage and the corresponding rated impulse voltage values apply for grounded and ungrounded circuits.

Pollution Degrees

Pollution factors are all solid, liquid or gaseous foreign matter which may reduce the dielectric strength or the specific surface resistance. Factors are divided into four classes based on expected environmental conditions:

		Examples of pollution degrees for assigned areas:
Pollution degree 1:	No pollution, or only dry, non-conductive pollution occurs. Pollution has no influence.	Open, unprotected insulated equipment in air-conditioned or clean, dry rooms
Pollution degree 2:	Only non-conductive pollution occurs. Occasional, temporary conductivity caused by condensation can also be expected.	Open, unprotected insulated equipment in occupied areas, shops, laboratories, mechanical workshops and medical rooms.
Pollution degree 3:	Conductive pollution occurs, or dry, non-conductive pollution occurs which will become conductive due to condensation.	Open, unprotected insulated equipment in industrial, business and farming areas (e.g., unheated rooms, workshops and boiler rooms)
Pollution degree 4:	The pollution generates persistent conductivity caused by conductive dust, rain or wet conditions.	Open, unprotected insulated equipment for outdoor use

Dimensioning Clearances
(DIN EN 60664-1/VDE 0110-1, Table F.2)

Select the minimum clearances in accordance with the rated surge voltages and pollution degrees. To maximize the operating life of the equipment, do not go below these minimum clearances.

Table F.2 contains a list of information for Case A, the inhomogeneous field and for Case B, the homogeneous field.

This involves an electric field with essentially constant (Case B) or non-constant (Case A) voltage gradients between the electrodes.

Equipment with a clearance that is dimensioned per Case A, in other words rated for the most unfavorable case, requires no verification by the impulse voltage test.

Equipment with a clearance that is dimensioned per Case B, or between A and B, requires verification by the impulse voltage test.

The clearances shown in Table F.2 are applicable for an installation height of up to 2000 m above sea level.

Values for clearances above 2000 m must be multiplied by a high correction factor in accordance with Table A.2.

Table F.2 – Clearances to Withstand Transient Overvoltages
DIN EN 60664-1/VDE 0110-1

Required Impulse Withstand Voltage[1)5)]	Minimum Clearances in Air up to 2000 m Above Sea Level					
	Case A Inhomogeneous Field (see 3.15)			Case B Homogeneous Field (see 3.14)		
	Pollution Degree[6]			Pollution Degree[6]		
	1	2	3	1	2	3
kV	mm	mm	mm	mm	mm	mm
0.33[2)]	0.01	0.2[3)4)]	0.8[4)]	0.01	0.2[3)4)]	0.8[4)]
0.4	0.02			0.02		
0.5[2)]	0.04			0.04		
0.6	0.06			0.06		
0.8[2)]	0.10			0.10		
1	0.15			0.15		
1.2	0.25	0.25		0.2		
1.5[2)]	0.5	0.5		0.3	0.3	
2	1	1	1	0.45	0.45	
2.5[2)]	1.5	1.5	1.5	0.6	0.6	
3	2	2	2	0.8	0.8	
4[2)]	3	3	3	1.2	1.2	1.2
5	4	4	4	1.5	1.5	1.5
6[2)]	5.5	5.5	5.5	2	2	2
8[2)]	8	8	8	3	3	3
10	11	11	11	3.5	3.5	3.5
12[2)]	14	14	14	4.5	4.5	4.5
15	18	18	18	5.5	5.5	5.5
20	25	25	25	8	8	8
25	33	33	33	10	10	10
30	40	40	40	12.5	12.5	12.5
40	60	60	60	17	17	17
50	75	75	75	22	22	22
60	90	90	90	27	27	27
80	130	130	130	35	35	35
100	170	170	170	45	45	45

[1)] This voltage is for:
- Functional insulation: the maximum impulse voltage expected to occur across the clearance (see 5.1.5)
- Basic insulation directly exposed to or significantly influenced by transient overvoltages from the low-voltage mains (see 4.3.3.3, 4.3.3.4.1 and 5.1.6): the rated impulse voltage for the equipment;
- Other basic insulation (see 4.3.3.4.2): the highest impulse voltage that can occur in the circuit

For reinforced insulation, see 5.1.6.

[2)] Preferred values specified in 4.2.3

[3)] For printed wiring material, the values for pollution degree 1 apply, except that the value must not be less than 0.04 mm, as specified in Table F.4.

[4)] The minimum clearances given for pollution degree 2 and 3 are based on the reduced withstand characteristics of the associated creepage distance under humidity conditions (see IEC 60664-5).

[5)] For parts or circuit within equipment subject to surge voltages based on 4.3.3.4.2, interpolation of values is allowed. However, standardization is achieved by using the preferred series of impulse voltage values based on 4.2.3.

[6)] The dimensions for pollution degree 4 are as specified for pollution degree 3, except that the minimum clearance is 1.6 mm.

Tests and Testing Procedures per IEC/EN Standards (continued)
Electrical Tests (continued)

▪ Insulation Parameters per IEC/EN 60664-1 (continued)

Creepage Distances,
Rated Voltages,
Material Groups

Criteria for dimensioning creepage distances are the rated voltages, pollution degrees and material groups.

The pollution degrees specified for the clearances, and its quoted allocation to locations, is also applicable for creepage distances.

Tables F.3 a and F.3 b of DIN EN 60664-1/VDE 0110-1 contain the rated voltages that have to be considered for dimensioning the minimum creepage distances.

Altitude m	Standard Air Pressure (in kPa)	Multiplier for Clearances
2000	80	1
3000	70	1.14
4000	62	1.29
5000	54	1.48
6000	47	1.7
7000	41	1.95
8000	35.5	2.25
9000	30.5	2.62
10000	26.5	3.02
15000	12	6.67
20000	5.5	14.5

Table F.3a – Single-Phase, 3- or 2-Conductor, AC or DC Systems

Nominal Voltage of the Power Supply System (Mains)*	Voltages for Table F.4	
	For insulation conductor-to-conductor[1)]	For insulation conductor-to-ground[1)]
	All systems	Three-conductor systems, center-point grounded 
V	V	V
12.5	12.5	
24 25	25	
30	32	
42 48 50**	50	
60	63	
30 to 60	63	32
100**	100	
110 120	125	
150**	160	
200	200	
110 to 200	200	100
220	250	
110 to 220 120 to 240	250	
300**	320	
220 to 440	500	250
600**	630	
480 to 960	1000	500
1000**	1000	

[1)] Conductor-to-ground insulation level for non-grounded or impedance-grounded systems equals that for conductor-to-conductor, as the operating voltage to ground of any conductor can, in practice, approach full conductor-to-conductor voltage. This is because the actual voltage to ground is determined by the insulation resistance and capacitive reactance of each conductor to ground; thus, low (but acceptable) insulation resistance of one conductor can in effect ground it and raise the other two to full conductor-to-conductor voltage to ground.

*For the relationship to rated voltage, see 4.3.2.

**These values correspond to the values given in Table F.1.

Table F.3b – Single-Phase, 4- or 3-Conductor AC Systems

Nominal Voltage of the Power Supply System (Mains)*	Voltages for Table F.4		
	For insulation conductor-to-conductor[1]	For insulation conductor-to-ground[1]	
	All systems	Three-phase, 4-conductor systems with grounded neutral conductor[2] 	Three-phase, 3-conductor systems, non-grounded[1] or grounded conductor 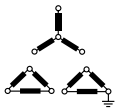
V	V	V	V
60	63	32	63
110 120 127	125	80	125
150**	160		160
200	200		200
208	200	125	200
220 230 240	250	160	250
300**	320		320
380 400 415	400	250	400
440	500	250	500
480 500	500	320	500
575	630	400	630
600**	630		630
660 690	630	400	630
720 830	800	500	800
960	1000	630	1000
1000**	1000		1000

[1] Conductor-to-ground insulation level for non-grounded or impedance-grounded systems equals that for conductor-to-conductor, as the operating voltage to ground of any conductor can, in practice, approach full conductor-to-conductor voltage. This is because the actual voltage to ground is determined by the insulation resistance and capacitive reactance of each conductor to ground; thus, low (but acceptable) insulation resistance of one conductor can in effect ground it and raise the other two to full conductor-to-conductor voltage to ground.
[2] For equipment used on both three-phase, 4-conductor and three-phase, 3-conductor systems, grounded and non-grounded, use only the values for 3-conductor systems.
*For the relationship to rated voltage, see 4.3.2.
**These values correspond to the values given in Table F.1.

Material Groups
Insulation materials are classified into four groups according to their Comparative Tracking Index (CTI) as follows:
Material Group I: 600 ≤ CTI
Material Group II: 400 ≤ CTI < 600
Material Group IIIa: 175 ≤ CTI < 400
Material Group IIIb: 100 ≤ CTI < 175
The CTI values above refer to values obtained in accordance with DIN EN 60664-1/VDE 0110-1 on samples specially made for this purpose and tested with Solution A.

Tests and Testing Procedures per IEC/EN Standards (continued)
Electrical Tests (continued)

- Insulation Parameters per IEC/EN 60664-1 (continued)

Table F.4 – Creepage Distances to Avoid Failure due to Tracking
DIN EN 60664-1/VDE 0110-1

Voltage[1] (RMS)	Minimum Creepage Distances								
	Printed Circuits		Pollution Degree						
	Pollution Degree								
	1 All Material Groups	2 All Material Groups except IIIb	1 All Material Groups	2 Material Group I	2 Material Group II	2 Material Group III	3 Material Group I	3 Material Group II	3 Material Group III[2]
V	mm	mm	mm	mm	mm	mm	mm	mm	mm
10	0.025	0.04	0.08	0.4	0.4	0.4	1	1	1
12.5	0.025	0.04	0.09	0.42	0.42	0.42	1.05	1.05	1.05
16	0.025	0.04	0.1	0.45	0.45	0.45	1.1	1.1	1.1
20	0.025	0.04	0.11	0.48	0.48	0.48	1.2	1.2	1.2
25	0.025	0.04	0.125	0.50	0.5	0.5	1.25	1.25	1.25
32	0.025	0.04	0.14	0.53	0.53	0.53	1.3	1.3	1.3
40	0.025	0.04	0.16	0.56	0.8	1.1	1.4	1.6	1.8
50	0.025	0.04	0.18	0.6	0.85	1.2	1.5	1.7	1.9
63	0.04	0.063	0.2	0.63	0.9	1.25	1.6	1.8	2
80	0.063	0.1	0.22	0.67	0.95	1.3	1.7	1.9	2.1
100	0.1	0.16	0.25	0.71	1	1.4	1.8	2	2.2
125	0.16	0.25	0.28	0.75	1.05	1.5	1.9	2.1	2.4
160	0.25	0.4	0.32	0.8	1.1	1.6	2	2.2	2.5
200	0.4	0.63	0.42	1	1.4	2	2.5	2.8	3.2
250	0.56	1	0.56	1.25	1.8	2.5	3.2	3.6	4
320	0.75	1.6	0.75	1.6	2.2	3.2	4	4.5	5
400	1	2	1	2	2.8	4	5	5.6	6.3
500	1.3	2.5	1.3	2.5	3.6	5	6.3	7.1	8 (7.9)[4]
630	1.8	3.2	1.8	3.2	4.5	6.3	8 (7.9)[4]	9 (8.4)[4]	10 (9)[4]
800	2.4	4	2.4	4	5.6	8	10 (9)[4]	11 (9.6)[4]	12.5 (10.2)[4]
1000	3.2	5	3.2	5	7.1	10	12.5 (10.2)[4]	14 (11.2)[4]	16 (12.8)[4]
1250			4.2	6.3	9.	12.5	16 (12.8)[4]	18 (14.4)[4]	20 (16)[4]
1600			5.6	8	11	16	20 (16)[4]	22 (17.6)[4]	25 (20)[4]
2000			7.5	10	14	20	25 (20)[4]	28 (22.4)[4]	32 (25.6)[4]
2500			10	12.5	18	25	32 (25.6)[4]	36 (28.8)[4]	40 (32)[4]
3200			12.5	16	22	32	40 (32)[4]	45 (36)[4]	50 (40)[4]
4000			16	20.	28	40	50 (40)[4]	56 (44.8)[4]	63 (50.4)[4]
5000			20	25	36	50	63 (50.4)[4]	71 (56.8)[4]	80 (64)[4]
6300			25	32	45	63	80 (64)[4]	90 (72)[4]	100 (80)[4]
8000			32	40	56	80	100 (80)[4]	110 (88)[4]	125 (100)[4]
10000			40	50	71	100	125 (100)[4]	140 (112)[4]	160 (128)[4]
12500			50[3]	63[3]	90[3]	125[3]			
16000			63[3]	80[3]	110[3]	160[3]			
20000			80[3]	100[3]	140[3]	200[3]			
25000			100[3]	125[3]	180[3]	250[3]			
32000			125[3]	160[3]	220[3]	320[3]			
40000			160[3]	200[3]	280[3]	400[3]			
50000			200[3]	250[3]	360[3]	500[3]			
63000			250[3]	320[3]	450[3]	600[3]			

[1] This voltage is for:

- Functional insulation; the working voltage
- Basic and supplementary insulation of the circuit energized directly from the mains (see 4.3.2.2.1): for the voltage rationalized through Table F.3a or F.3b, based on the rated voltage of the equipment, or the rated insulation voltage
- Basic and supplementary insulation of systems, equipment and internal circuits not energized directly from the mains (see 4.3.2.2.2.): the highest rms voltage which can occur in the system, equipment or internal circuit when supplied at rated voltage and under the most taxing combination of operation conditions within equipment rating

[2] Material group IIIb is not recommended for applications in pollution degree 3 above 630 V.
[3] Provisional data based on extrapolation. Technical committees who have other information based on experience may use their dimensions.
[4] The values in brackets must only be applied for reducing creepage distances if a rib is used (see 5.2.5).

The high degree of accuracy of the creepage distances given in the table does not imply that the measuring accuracy must be of the same quality.

Depending on the intended use, WAGO's terminal blocks, splicing and pluggable connectors are suitable for pollution degrees 2 or 3 and for overvoltage categories II or III.
The rated voltages of WAGO's PCB terminal blocks and connectors are based on pollution degree 2 and overvoltage category III in per IEC/EN 60664-1 (insulation parameters).
Example:
WAGO 236 Series PCB Terminal Strips
(5/5.08 mm pin spacing)

	320 V/4kV/2
Rated voltage	320 VDC
Rated surge voltage	4 kV
Pollution degree	2
Overvoltage category	III

The specific values for pollution degree 3 and overvoltage category II are also given in the technical data.

The clearances and creepage distances required for defined voltage values in Table 3 of IEC/EN 60998-1 deviate somewhat from the requirements specified in the insulation parameters.

Table 3 – Clearances and Creepage Distances
(IEC/EN 60998-1)

Rated Insulation Voltage V	Clearances/Creepage Distances mm
≤ 130	1.5
> 130 and ≤ 250	3
> 250 and ≤ 450	4
> 450 and ≤ 750	6
> 750	8

Tests and Testing Procedures per IEC/EN Standards (continued)
Electrical Tests (continued)

▪ Power-Frequency Withstand Voltage Test per IEC/EN 60947-7-4, IEC/EN 60998-1

This testing procedure verifies creepage distances. Creepage distances, i.e., the distances of creeping currents, are caused by conductive impurities on the surface of the insulation housing. Apart from the amount of impurities to which a terminal block is subjected, for example, the plastic material and housing design are also involved in generating creeping currents. The insulation material of the housing may be carbonized by a creeping current, which further increases conductivity.
The specimen is tested using a power-frequency withstand voltage for a short time. For example, a PCB terminal block designed to operate at 320 V nominal voltage is usually tested using 2200 V alternating voltage for one minute. The test is passed if no flashovers or breakdowns have occurred.

▪ Rated Impulse Withstand Voltage Test per IEC/EN 60947-7-4, IEC/EN 60664-1

This test verifies the clearances of a product. In simplified terms, clearance is the distance between two poles of a terminal block. If this distance is too small, voltage peaks may cause flashovers or breakdowns. The arrangement of the rated impulse withstand voltage test is identical to that of the power frequency withstand voltage test; the test voltages, however, are comparatively higher and the testing times shorter, e.g., 4.8 kV over 50 µs (see figure).

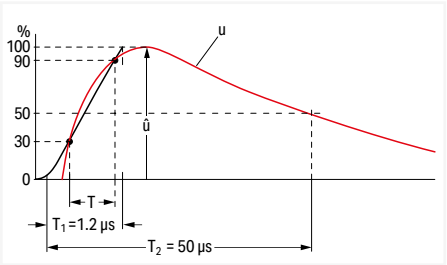

Voltage pulse: 1.2/50 µs per EN 60060-1/VDE 0432-1

Voltage pulse: measurement curve (red) and auxiliary curve (black) for calculating the rate of rise of the pulse and the resulting (virtual) peak of the curve.
T: Time interval for calculating the rate of rise
T1: Front time (duration between start of impulse and reaching the peak)
T2: Total pulse duration
The test values are the values at sea level as specified in the relevant test specification.
The values indicated in the catalog correspond to an altitude of 2000 m.
The test is passed if no flashovers or breakdowns have occurred.

▪ IP Ratings for Electrical Equipment per IEC/EN 60529

Alphanumeric Nomenclature for Type of Protection			
Code letters IP	Protection against accidental contact and against the penetration of foreign objects or water	IP (Ingress Protection) = International degree of protection	
First code number 0 to 6	Indicates the degree of protection against accidental contact and the penetration of foreign objects.	If indicating the degree of protection requires only one digit, the other (second) digit must be substituted for with an X.	
Second code number 0 to 8	Indicates the degree of protection against water penetration.		
First code number:		Second code number:	
IP0X	No protection against accidental contact or the penetration of foreign objects	IPX0	No protection against water
IP1X	Protection against foreign objects > 50 mm	IPX1	Protection against vertically falling water
IP2X	Protection against foreign objects > 12 mm (e.g., finger)	IPX2	Protection against diagonally dripping water (15° angle)
IP3X	Protection against foreign objects > 2.5 mm	IPX3	Protection against water spray
IP4X	Protection against foreign objects > 1 mm	IPX4	Protection against water spray
IP5X	Protection against damaging dust deposits	IPX5	Protection against water jet, e.g., from a nozzle
IP6X	Protection against dust penetration	IPX6	Protection against flooding
		IPX7	Protection against temporary immersion
		IPX8	Protection against continuous immersion
		IPX9	Protection against high-pressure and high-temperature water jets

IP vs. NEMA	
IP Code	NEMA
10	1
11	2
54	3
14	3R
54	3S
55	4&4X
52	5
67	6&6P
52	12&12K
54	13

Tests and Testing Procedures per IEC/EN Standards (continued)

Material Tests

All WAGO products meet requirements for the following material tests:

- Needle Flame Test per IEC/EN 60947-7-1, IEC/EN 60695-11-5

This test simulates flames that may arise under certain conditions (e.g, fault current over a creepage distance, overloading of parts or components). Nearby parts can also be affected by such flames.
Not only the ignition of the test specimen resulting from an intrinsic defect is tested, but also its behavior when other parts ignite.

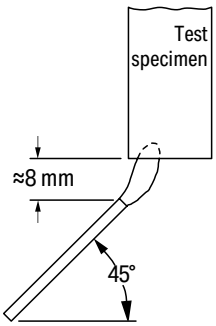

Test arrangement I

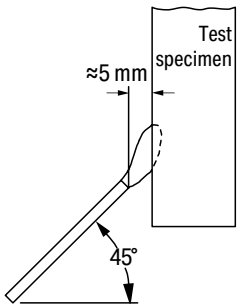

Test arrangement II

Flames must not be fuelled by the insulation materials used, thus creating a larger fire. The test specimen is exposed to a standard gas flame during a defined time period (e.g., ten seconds).
After the test flame has been removed, the specimen must self-extinguish within 30 seconds. Furthermore, a layer of tissue paper located beneath the specimen must not be ignited by glowing particles falling from the specimen.

- Glow-Wire Test per IEC/EN 60947-7-4, IEC/EN 60998-1, IEC/EN 60695-2-11

In the event of failure, a high current may cause a conductor to glow.

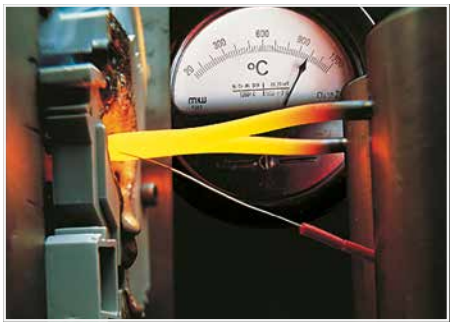

However, the glowing conductor shall not cause ignition of the product involved (e.g., a rail-mount terminal block). For the glow-wire test, the tip of the glow-wire is pressed against a surface of the test specimen (see picture).
The position of the test specimen, surface to be tested, test duration and glow-wire temperature (e.g., 960°C/1760°F over 30 seconds, or 850°C/1562°F over 5 seconds) are specified in the standards.
The specimen must be positioned such that the tip of the glow-wire acts on the surface section of the specimen (vertical surface of the specimen) that is most likely to be exposed to thermal loading during normal use.

As the highest temperature in the event of a fault is anticipated at the contact insert/wire connection, the tip of the glow-wire must act upon the section of the insulation housing that is the closest to this contact point.
The test is passed if there are no visible flames or permanent glowing, or if flames or glowing extinguish within 30 seconds after removal of the glow-wire. Furthermore, a layer of tissue paper located beneath the specimen must not be ignited by glowing particles falling from the specimen.

Tests and Testing Procedures per IEC/EN Standards (continued)

Environmental Tests

The following tests show how a product reacts when exposed to an aggressive environment. Climatic chambers simulate standard atmospheres that could impact the long-term consistency of clamping units.

All WAGO products meet the requirements of the following environmental tests:

▪ Temperature Cycling Test per IEC/EN 60947-7-1, IEC/EN 60998-2-2

This test shows the change of voltage drop over longer periods under temperature cycling conditions. The test procedure usually consists of 192 temperature cycles, for example, each cycle having a duration of 60 minutes (see diagram).

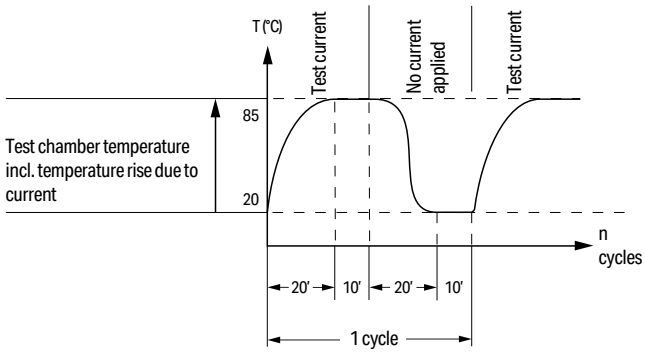

The rated current is applied to the test specimen during temperature rise and when the temperature has reached its maximum value; during the second half of the cycle, the current is zero. Voltage drop is measured every 24 cycles and must not exceed a maximum value or vary greatly. The voltage drop measured at the end of the 192nd cycle must not exceed 1.5 times the value measured after the 24th cycle. After the test, an inspection must show no changes that would impair further use of the product.

▪ Industrial Atmospheres per EN ISO 6988, IEC/EN 60068-2-42, IEC/EN 60068-2-60

Sulphur and its combustion products are particularly aggressive pollutants commonly found in industrial environments. A test procedure simulating such corrosive conditions consists of exposing a test specimen to water condensation in variable atmospheres containing sulphur dioxide.



A saturated atmosphere is first created in a climatic chamber by heating an aqueous sulphur dioxide solution. After less than half an hour, the test specimen is fully saturated by the condensing vapors and exposed to this atmosphere for eight hours.
After exposure to a humid atmosphere, the test specimen is subjected to dry and cooler conditions at room temperature for 16 hours. Depending on the test severity, the specimen is exposed to both these conditions several times. The gas-tightness of the clamping unit is verified by a voltage drop test.
In other test procedures, products are exposed to a dry corrosive gas atmosphere containing sulfide, nitrogen and sulfur oxides or chloride gas. These tests can be performed over a period of four to 21 days.

▪ Salt Spray Test per IEC/EN 60068-2-11; DNV GL, LR (Marine Applications)

This test is similar to the test performed in water condensation alternating atmospheres, except that instead of industrial atmospheres, salt mist conditions will be simulated in a heated test chamber (see picture).

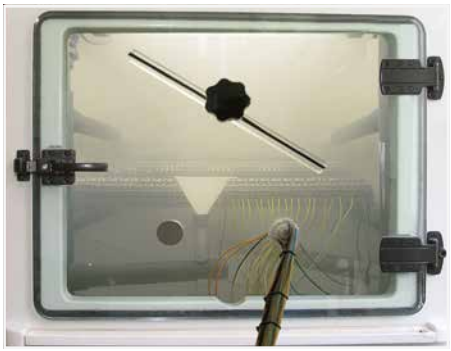

Depending on the test procedure being used, the test specimen is sprayed with salt mist for 16 hours up to 672 hours (4 weeks).
Salt spray tests are widely used, especially for marine approvals.
However, this test is performed differently than the test procedures described previously for general applications:
During a typical test, the test specimen is sprayed with a salt solution for two hours and is then stored for seven days in an atmosphere with a relative humidity between 90 and 95%.
This procedure is repeated four times.
Voltage drop measurements are used as an evaluation criterion.

▪ Quick Change of Temperature per IEC/EN 60068-2-14

Without air-conditioning, distribution panels and terminal boxes are exposed to seasonal (and ever-changing) temperature extremes – especially on the open field side.
In process technology, for example, a terminal block is exposed to even quicker changes in temperature.

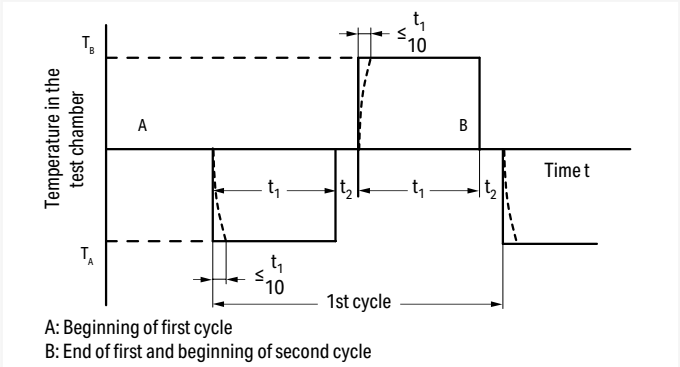

A: Beginning of first cycle
B: End of first and beginning of second cycle

To simulate such conditions, the test specimen is exposed to repeated temperature changes, for example, between TA –40°C (–104°F) and TB +70°C (+158°F).
The dwell time t1 depends on the thermal capacity of the test specimen and should be between maximum of 3 h and minimum of 10 min and the transition time t2 2 ... 3 min, 20 ... 30 s or less than 10 s.
The mechanical and electrical properties of the product are checked at the end of the test.

▪ Damp Heat, Cyclic (12 + 12 Hour Cycle) per IEC/EN 60068-2-30, DNV GL, LR (Marine Applications)

This test determines the suitability of electrical equipment for use and storage under conditions of high relative humidity when combined with cyclic temperature changes and, in general, producing condensation on the surface of the specimen.

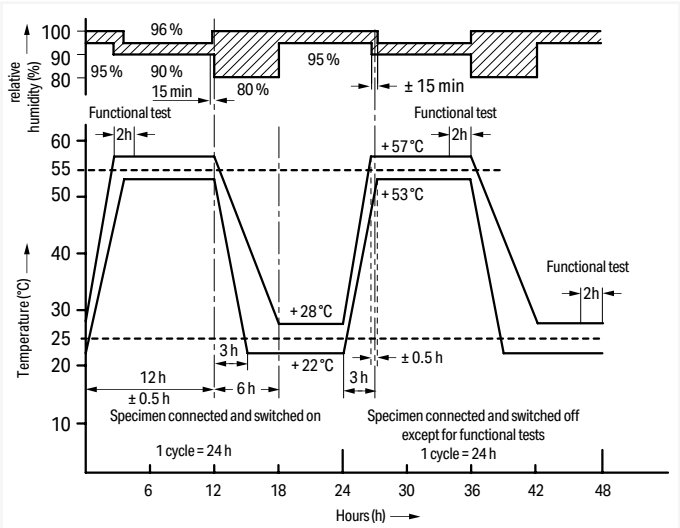

In addition to the salt spray tests, the damp heat test is also used for marine approvals.
For this test, the specimens are subjected to temperatures varying cyclically between +25°C (+77°F) and +55°C (+131°F) with a relative humidity of 95% (for tolerances see figure).
Functional tests are performed at defined times during the storage period.
The mechanical and electrical properties of the product are checked at the end of the test.

UL Specifications – Underwriters Laboratories, USA

WAGO's terminal blocks and connectors are tested by Underwriters Laboratories Inc. according to one or more of the relevant following UL standards:

▪ PCB terminal strips (e.g., 236, 745 Series) are approved as non-stand-alone components per UL 1059 in connection with UL 486E.	UL 1059	Standard for terminal blocks
▪ The *MULTI CONNECTION SYSTEM* "*MCS*-MIDI" is approved as terminal blocks per UL 1059 standard in connection with UL 486 E. It is therefore defined for field and factory wiring with at 300 V.	UL 486 E	Equipment wiring terminals for use with aluminum and/or copper conductors
▪ It is also approved as connectors for use in data, signal, control and power applications per UL 1977 for factory wiring at 600 V (i.e., the clamping unit must be wired under controlled manufacturing conditions).	UL 1977	Component connectors for use in data, signal, control and power applications
▪ Ex e II terminal blocks are approved to UL 60079-7.	UL 60079-7	Electrical apparatus for explosive gas atmospheres – Part 7: Increased safety
▪ Insulation materials are tested for flammability and performance per UL 94.	UL 94	Tests for flammability of plastic materials for parts in devices and appliances

Tests and Testing Procedures per UL Standards

All WAGO products meet requirements for the following tests:

- Pull-Out Test per UL 1059, UL 486 E

In this test, the connected conductors are subjected to the appropriate pull-out forces specified in the following table without jerking for a period of one minute.

Conductor Size		Pull-Out Force, Pounds (N)			
		UL 486 E, Table 22			
AWG or kcmil	(mm²)	Copper		Aluminum	
30	(0.05)	0.5	(2.2)	-	-
28	(0.08)	1	(4.5)	-	-
26	(0.13)	2	(8.9)	-	-
24	(0.2)	3	(13.4)	-	-
22	(0.32)	4.5	(20)	-	-
20	(0.52)	6.75	(30)	-	-
18	(0.82)	6.75	(30)	-	-
16	(1.3)	9	(40)	-	-
14	(2.1)	11.5	(50)	-	-
12	(3.3)	13.5	(60)	10	(44)
10	(5.3)	18	(80)	10	(44)
8	(8.4)	20.5	(90)	10	(44)
6	(13.3)	21	(94)	28	(124)
4	(21.2)	30	(133)	36	(160)
3	(26.7)	35	(156)	42	(187)
2	(33.6)	42	(186)	50	(222)
1	(42.4)	53	(236)	61	(271)
1/0	(53.5)	64	(285)	72	(320)
2/0	(67.4)	64	(285)	78	(347)
3/0	(85.0)	79	(351)	97	(432)
4/0	(107)	96	(427)	116	(516)
250	(127)	96	(427)	116	(516)
300	(156)	99	(441)	116	(516)

Test Arrangement per
UL 1059, UL 486 E:

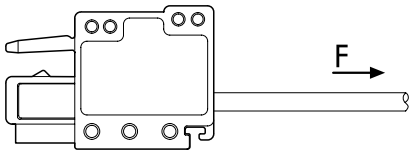

UL Specifications – Underwriters Laboratories, USA (continued)
Tests and Testing Procedures per UL Standards (continued)

- Heat Cycling Test per UL 1059, UL 486 E

Test performed per:

UL 1059

Test performed with maximum rated cross section

Test current: 150% of maximum rated current

84 cycles of: 3 1/2 h ON / 1/2 h OFF

The temperature rise is measured after the first and the 84th cycle.

The temperature rise must not exceed 5°C (41°F) after the 84th cycle, compared to the temperature measured after the first cycle.

per UL 486 E (Equipment wiring terminals)

Test performed with maximum rated cross section

Test current: Increased test current per UL 486 E, Table 4

500 cycles of: 1 h ON / 1 h OFF
1 1/2 h ON / 1 1/2 h OFF
(from 4/0 AWG up to 400 kcmil per UL 486 E)

The temperature rises at the terminal blocks and control conductors are measured and recorded after: 1, 25, 50, 75, 100, 125, 175, 225, 275, 350, 425 and 500 cycles.

The temperature rise must not exceed 125°C (257°F) and the stability factor "S" must not exceed ±10.

Conductor Size		Test Current for Copper Conductors in A						
		UL 486 E, Table 4						
AWG or kcmil	(mm²)	Assigned Maximum Ampere Rating[b]	Static Heating[a,c,g]		Heat Cycling Temperature Rating[a]			
					75°C (167°F)[d,g]		90°C (194°F)[e,g]	
30	(0.05)	-		3		3.5		4
28	(0.08)	-		3.5		4		5
26	(0.13)	-		5.5		6		8
24	(0.2)	-		7		8		10
22	(0.32)	-		9		12		13
20	(0.52)	-		12		16		17
18	(0.82)	-		17		19		24
16	(1.3)	-		18		20		31
14	(2.1)	15	[20]	30	[22]	33	[27]	40
12	(3.3)	20	[25]	35	[28]	39	[40]	54
10	(5.3)	30	[40]	50	[45]	56	[60]	75
8	(8.4)	50		70		80		100
6	(13.3)	65		95		105		131
4	(21.2)	85		125		140		175
3	(26.7)	100		145		165		205
2	(33.6)	115		170		190		240
1	(42.4)	130		195		220		275
1/0	(53.5)	150		230		255		320
2/0	(67.4)	175		265		300		370
3/0	(85.0)	200		310		345		435
4/0	(107)	230		360		405		505
250	(127)	255		405		445		565
300	(152)	285		445		500		625

[a] See Section 7.2, 8.2 and 9.2 (UL 486 E)
[b] Values are for 75°C (167°F), not more than three conductors in raceway or cable ampacities, National Electric Code, ANSI/NFPA 70.
[c] Values are for 75°C (167°F) single conductors in free air ampacities, National Electric Code, ANSI/NFPA 70.
[d] Values are approximately 112% of the static heating test currents.
[e] Values for 8 AWG and larger conductors are approximately 140% of the static heating test currents.
[f] See Section 9.2.4
[g] Values in parentheses apply to connectors with assigned ampere ratings.

Conditioning – Temperature-Rise Rest per UL 1059

Test performed per:

per UL 1059 (terminal blocks)

Conditioning:
The clamping units are pre-wired/pre-inserted nine times using a conductor with maximum rated cross section. At the 10th time, a new conductor is connected.
After this, a static heating test is performed.

Static Heating Test:

Test current:	Terminal block rated current
Test duration:	30 days
Max. permissible temperature rise:	30°C (86°F)

UL Specifications – Underwriters Laboratories, USA (continued)
Tests and Testing Procedures per UL Standards (continued)

▪ Insulation Parameters per UL 1059

The table below shows the potential involved and the corresponding clearances and creepage distances required in different applications.

Table 8.1 – Minimum Acceptable Spacing for Terminal Blocks per UL 1059 Standard

		Spacing in inches (mm) between uninsulated live parts of opposite polarity, uninsulated live parts and uninsulated grounded parts other than the enclosure	
Application:	Potential Involved in Volts	Through Air	Over Surfaces
A. Dead-front switchboards, panelboards, service equipment and similar applications	51 … 150 151 … 300 301 … 600	1/2 (12.7) 3/4 (19.1) 1 (25.4)	3/4 (19.1) 1-1/4 (31.8) 2 (50.8)
B. Commercial appliances, including business equipment, electronic data processing equipment and similar applications	51 … 150 151 … 300 301 … 600	1/16[a] (1.6)[a] 3/32[a] (2.4)[a] 3/8 (9.5)	1/16[a] (1.6)[a] 3/32[a] (2.4)[a] 1/2 (12.7)
C. Industrial, general	51 … 150 151 … 300 301 … 600	1/8[a] (3.2)[a] 1/4 (6.4) 3/8 (9.5)	1/4 (6.4) 3/8 (9.5) 1/2 (12.7)
D. Industrial, devices having limited ratings[b]	51 … 300 301 … 600	1/16[a] (1.6)[a] 3/16[a] (4.8)[a]	1/8[a] (3.2)[a] 3/8 (9.5)
E. Terminal blocks rated 601 … 1500 V[c]	601 … 1000 1001 … 1500	0.55 (14.0) 0.70 (17.8)	0.85 (21.6) 1.20 (30.5)

Notes:
1 A slot, groove, or similar, 0.013 inch (0.33 mm) wide or less in the contour of the insulating material is to be disregarded.
2 Air space of 0.33 mm or less between a live part and an insulating surface is to be disregarded for the purpose of measuring over surface spacing.
[a] The spacing between terminal blocks of opposite polarity and the spacing between a terminal block and a grounded dead metal part shall not be less than 1/4 inch (6.4 mm) if short-circuiting or grounding of such terminal blocks may result from protruding wire strands.
[b] See Section 8.5 (UL 1059)
The spacing values indicated in sub-paragraph D in Table 8.1 are applicable to a terminal block for use only in or with industrial control equipment where the load on any single circuit of the terminal block does not exceed
15 A at 51 … 150 V, 10 A at 151 … 300 V,
5 A at 301 … 600 V or the maximum ampere rating, whichever is less.
[c] Applies only to terminal blocks investigated to Part II of this standard. See Section 22.1 (UL 1059).

▪ Flammability Test per UL 94

This test provides an indication of the material's ability to extinguish a flame, once ignited.
Several ratings can be applied, based on the rated of burning, time to extinguish, ability to resist dripping, and after-glow extinguishing time.
Each material tested may receive several ratings, depending on the wall thickness.
UL 94 Rating Categories:

V2
- Specimen mounted vertically
- Burning stops within 30 seconds after the flame is removed
- Flaming drips allowed
- After-glow extinguishes within 60 seconds max.

V1
- Specimen mounted vertically
- Burning stops within 30 seconds after the flame is removed
- No flaming drips allowed
- After-glow extinguishes within 60 seconds max.

V0
- Specimen mounted vertically
- Burning stops within 10 seconds after the flame is removed
- No flaming drips allowed
- After-glow extinguishes within 30 seconds max.

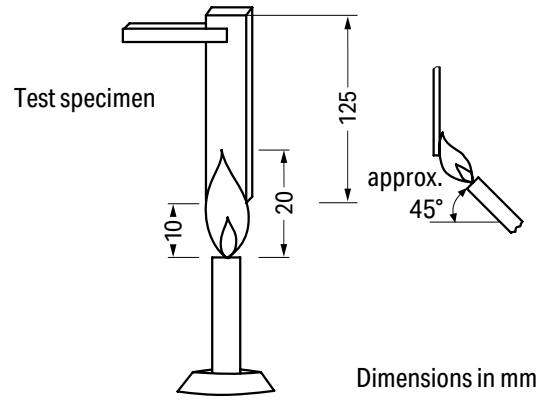

During the test, a 3/4 inch (20 ±1 mm) flame is applied for two 10-second intervals to the specified bar specimen held vertically.

Material Specifications

Soldering Information

Wave Soldering
WAGO's PCB terminal blocks and connectors comply with the 2011/65/EU Directive of June 8, 2011 and display the "RoHS compliant" logo on their packaging.
In accordance with IEC 61760-1, the maximum double-wave soldering temperature is 260°C (500°F) for a maximum 10 seconds or 5 seconds per wave.

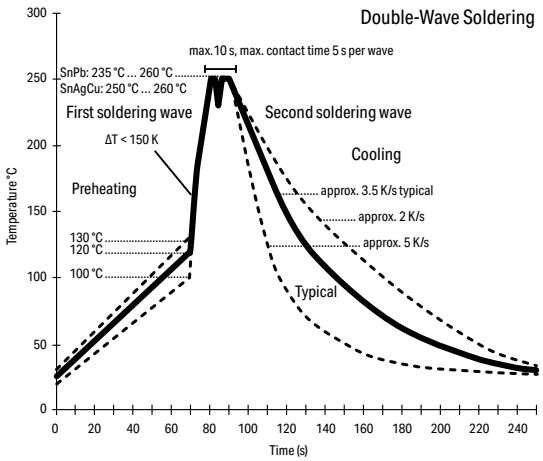

Reflow Soldering
WAGO's THR and SMD PCB terminal blocks and connectors have high-temperature-resistant insulated housings and reflow solder contacts.
In accordance with IEC 61760-1 or IEC 60068-2-58, the maximum soldering temperature is 260°C/500°F (peak temperature). Due to customer-specific variables (e.g., component configuration and orientation, type of soldering machine, solder paste), trial runs are recommended to ensure product and process compatibility under actual manufacturing conditions.

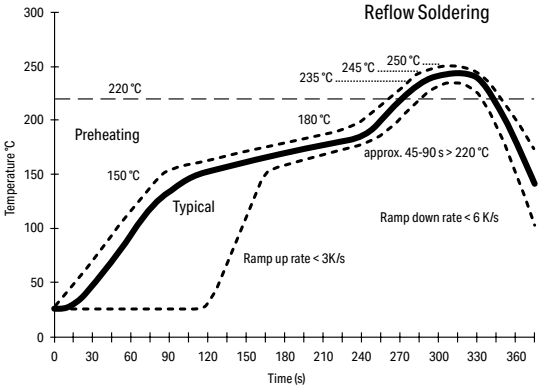

Insulation Materials

WAGO primarily uses polyamide (PA 66 and PA 46) for housing current-conducting parts, as well as polyphthalamide (PPA) and polycarbonate (PC) for insulation material (see table). For more than 50 years, these materials have proven themselves in WAGO products and all are approved by certified, third-party agencies. All listed halogen-free and flame-retardant polymer materials do not contain any heavy metals, silicone, asbestos, or formaldehyde as formulation components.

Table: Standard Insulation Materials

Material	PA 66	PA 66 GF	PPA GF	PA 46	PC	PC
Flammability UL 94 flammability test ratings	V0	V0	V0	V2	V2	V0
Oxygen Index (OI) per EN ISO 4589-2	> 32 %	> 33 %	> 37 %	> 27 %	> 26 %	> 35 %
Glow-wire test per IEC 60695-2-12 GWFI* IEC 60695-2-13 GWIT*	 850 °C 775 °C	 850 °C 775 °C	 850 °C 775 °C	 750 °C 725 °C	 800 °C 850 °C	 960 °C 850 °C
Comparative Tracking Index (CTI) per IEC 60112	600 V	600 V	600 V	375 V	225 V	225 V
Temperature of the ball indentation hardness test per IEC 60695-10-2	≥ 125 °C	≥ 175 °C	≥ 225 °C	n.s.**	≥ 125 °C	≥ 125 °C
RTI impact per UL 746B	105 °C	100 °C	115 °C	115 °C	125 °C	120 °C
Heat deflection temperature (HDT/B) per ISO 75 (bending stress A*: 1.8 MPa; B: 0.45 MPa)	215 °C	235 °C	285 °C	280 °C	130 °C (1.8 MPa)	130 °C (1.8 MPa)
Surface resistivity per IEC 60093	10^{12} Ω	10^{12} Ω	10^{15} Ω	10^{13} Ω	10^{15} Ω	10^{15} Ω
Specific contact resistance per IEC 60093	10^{15} Ω/cm	10^{15} Ω/cm	10^{13} Ω/cm	10^{13} Ω/cm	10^{11} Ω/cm	10^{13} Ω/cm
Dielectric strength per IEC 60243-1	30 kV/mm	40 kV/mm	25 kV/mm	25 kV/mm	25 kV/mm	29 kV/mm

*Value depends on wall thickness, EN 60335 compliance upon request; **n. s. = not specified

Polyamide (PA 66)
WAGO uses modified, halogen-free, flame-retardant polyamides.
These materials do not corrode, are difficult to ignite and feature self-extinguishing properties (V0 rating per UL 94).
Adhering to UL 746C, the polyamides used at WAGO have a continuous operating temperature of 105°C (221°F) based on the relative temperature index with impact load (RTIimp). This ensures that the necessary electrical and mechanical insulating properties are maintained at a sufficiently guaranteed level over a long period of time.
The short-term upper temperature limit is 200°C (392°F).
In lower temperature ranges, it has been determined that no damage to the insulation material occurs during usage down to –35°C (–31°F). After installation and wiring, WAGO products can even be used at temperatures down to –60°C (–76°F).
Environmental humidity (up to 2.5% in a standard atmosphere) is absorbed, providing the polyamides with optimum elasticity, strength and durability.
In practical use, basic stabilization of WAGO's polyamides has been proven over many years to be sufficient to prevent damage caused by ozone or UV radiation exposure in intended applications.
Polyamides have excellent resilience against the most demanding climates and have proven themselves in tropical applications worldwide.
Insulation parts made of polyamide are resistant to insects. The material does not provide oxygen or other biogenic elements to microorganisms.
The presence of anaerobic earth bacteria, mold, fungus and enzymes does not degrade the material.
Polyamides are resistant to most fuels, greases, and oils, as well as the most commonly used cleaners, such as alcohol, Freon, Frigen, and carbon tetrachloride. Acid resistance depends on the acid type and concentration, as well as the exposure time.
The use of insulation materials during in-house production at WAGO only occurs after acceptance of factory test certificates and specified material tests.
Glass Fiber-Reinforced Polyamide (PA 66 GF)
WAGO uses glass-fiber-reinforced polyamides for components with increased mechanical demands, such as levers, push-buttons or housings exposed to high stress, because they have significantly better mechanical characteristic properties than non-reinforced polyamides.
In general, materials are used that have excellent tracking resistance, flammability ratings and high temperature resistance.
More data can be found in the table.
Polyphthalamide (PPA GF)
Glass-fiber-reinforced, high-performance polyamides are ideal for high-temperature applications, due to the material's high level of thermal dimensional stability, its low dependence on ambient conditions and its excellent strength properties. The material's outstanding tracking resistance permits short creepage distances to be incorporated into miniature components.
Fire protection equipment enables classification in flammability class V0 per UL 94 – even for extremely thin walls. PPA GF absorbs minute amounts of moisture from the atmosphere making it ideal for reflow soldering applications and for thin-walled, dimensionally stable components.
More data can be found in the table.
Polyamide (PA 46)
In comparison with PA 66, PA 46 has substantially higher dimensional stability under heat.
The relative temperature index with impact load (RTIimp) is 115°C (239°F) for PA 4.6.
The permissible short-term temperature for the type used by WAGO is 280°C (536°F).
More data can be found in the table.
Polycarbonate (PC)
Polycarbonate has excellent dimensional stability under heat. The electrical and mechanical properties remain intact at extremely high temperatures up to approximately 120°C (248°F) per UL Yellow Card. Its excellent electrical insulating properties and dimensional stability are virtually independent of environmental conditions, such as humidity and temperature. Highly precise components can be created due to the low shrinkage of the material during injection molding. Polycarbonate has excellent weather resistance and is also highly resistant to high energy radiation.
If the PC is not colored, then the components are glass-clear.
Thanks to its desirable properties (e.g., dimensional stability, heat resistance, non-flammability, durability and transparency), PC is a proven and widely used material in the electrical industry.
Depending on the demands placed on the finished product, WAGO uses polycarbonates that carry flammability classifications V2 and V0 per UL 94.
Medium-viscosity PC is used that features excellent chemical resistance.

Material Specifications

Contact Materials

Hard and extra-hard electrolytic copper (ECu), as well as extra-hard copper alloys are the standard materials used for the current-carrying parts of all WAGO products.

These materials combine excellent conductivity and good chemical resistance without the risk of stress-induced cracking.

Contact Materials

The special tin layer, which is the standard layer for all current-carrying parts in WAGO products, ensures perfect long-term protection against corrosive substances. Furthermore, these layers provide a gas-tight contact that ensures a durable transition resistance.

At the clamping unit, the conductor is embedded into the soft tin layer via high contact pressure. This protects the contact area against corrosion.

The thick tin layer also ensures good solderability of both PCB terminal block and connector solder pins.

Clamping Spring Material

Every WAGO clamping spring is made of high-quality, accurately tested austenitic chrome nickel steel (CrNi) with high tensile strength, which boasts proven corrosion resistance through long-term usage.
It is resistant to sea spray, city pollutants and industrial emissions (e.g., sulfur dioxide, hydrogen sulfide).
At room temperatures of approximately 20°C (68°F), the material is resistant to salt solutions up to 30% and dilute phosphoric acids up to 30%.

Even after decades of use, no galvanic corrosion between the chrome nickel spring steel (in connection with the contact materials used by WAGO) and the connected copper conductors has been detected.
The relaxation of the material as a function of time and surrounding temperatures up to 105°C (221°F) can be ignored. Samples loaded with 500 N/mm² at a temperature of 250°C (482°F) showed a relaxation of only 1.5%.

In certain product lines, the clamping springs are thermally treated at temperatures between 350°C (662°F) and 420°C (788°F) after production.
This treatment reduces internal stress due to the material's mechanical deformation, which may result in a slight brown discoloration of the spring surface.
WAGO only accepts deliveries of chrome nickel spring steel against certificates of conformity and after select material tests have been performed.

Table 1: General Environmental Requirements for Storage, Transportation and Installation*

Environmental requirements during	Value range
Installation	-35 °C … +60 °C
Storage and transportation	-40 °C … +60 °C
Relative humidity (storage and transportation)	20 % … 95 % (non-condensing, no dew)

*These requirements apply to open and packaged products unless otherwise specified on the product at www.wago.com or on the catalog page.

General Technical Information on Electrical Equipment Used in Hazardous Areas

The formation of an explosive atmosphere is required for the existence of a potentially explosive hazard. Such an atmosphere can be produced at any location where flammable gases or liquids are manufactured, processed, transported and/or stored.
Such hazardous areas can be found in a wide range of industries, including chemical plants, refineries, power plants, paint production facilities, painting shops, filling stations, vehicles, sewage treatment plants, airports, grain mills or harbor facilities.

THE FOLLOWING APPLIES AS A GUIDELINE FOR THE UNDERLYING PRINCIPLE FOR EXPLOSION PROTECTION:

General Requirements
The European EN 60079-0 Standard – VDE 0170-1 Classification – contains general requirements for the design and testing of electrical equipment to be used in hazardous areas. This ensures this equipment does not cause an explosion in the surrounding atmosphere.
EN 60079-0 is supplemented or revised by the European standards indicated on the right which refer to the specifically standardized types of protection.

Electrical Equipment
Electrical equipment includes all items used in whole or in part with electricity. This includes items for generation, transport, distribution, storage, measurement, control, conversion and consumption of electrical power, as well as telecommunications.

Ex Components
Ex components are elements of electrical equipment for hazardous areas that are marked with the "U" letter. These components must not be used on their own in such areas and require an additional certificate when used in such areas when installed in the electrical equipment.

Ignition Protection Categories
Only explosion-proof (protected) equipment must be used in areas in which an explosive atmosphere may still be expected despite the implementation of prevention measures.
Explosion-protected electrical equipment can have various types of protection in accordance with the EN 60079 standard requirements.
Protection used by the manufacturer essentially depends on the type and function of the apparatus. From a safety point of view, all standardized types of protection should be viewed as equal.
The ignition protection category "n" exclusively describes the use of explosion-protected electrical components in Zone 2. This zone includes areas in which hazardous, potentially explosive atmospheres are likely to occur rarely or short-term. This represents a transition between Zone 1, in which explosion protection is required, and the safe area in which, for example, welding may be performed at any time.
Regulations covering these electrical components are being prepared worldwide. Organizations such as KEMA in the Netherlands, or PTB in Germany certify that the devices meet the requirements of the EN 60079-15 standard.
Ignition protection category "n" also requires that electrical equipment be provided with additional ID markings as follows:

- nC – hermetically sealed, non-incendive, sealed
- nR – restricted-breathing

The table on the opposite page shows an overview of the standardized ignition protection categories and describes their basic principle, as well as typical applications.

General Technical Information on Electrical Equipment Used in Hazardous Areas
Continued

Harzardous Areas
Hazardous areas are zones in which the atmosphere may become explosive. An explosive atmosphere is a mixture of flammable substances in the form of gases, vapors or mixtures with air under atmospheric conditions in critically mixed ratios such that excessive high temperature, arcs or sparks may cause an explosion.

EN 60079-10-1/EN 60079-10-2 and all other well-known standards rank hazardous areas according to the likelihood of the occurrence of an explosive atmosphere into the following zones:

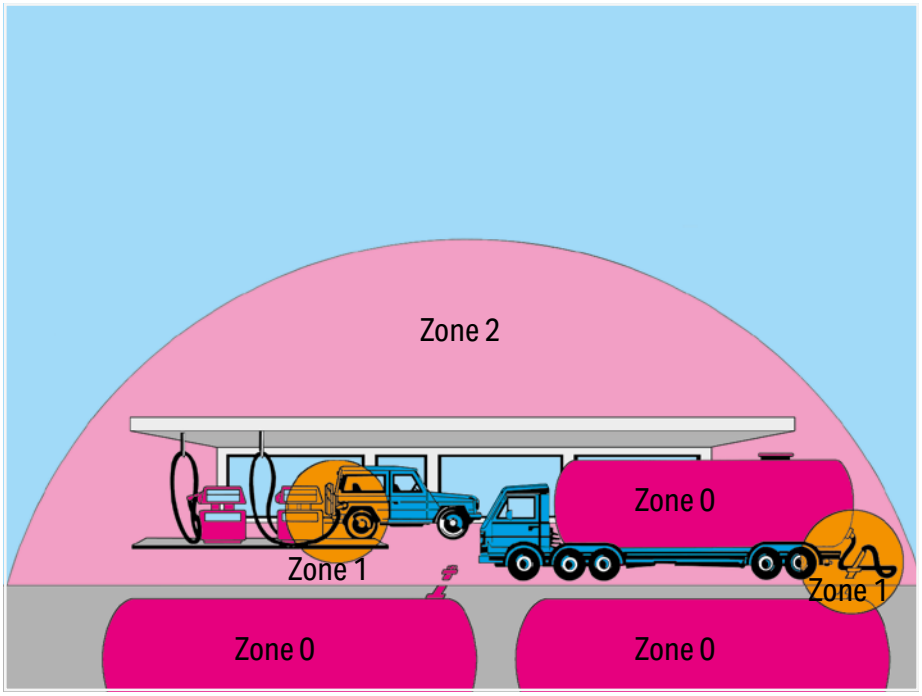

Hazardous areas due to explosive gases, vapors and mists:

Zone 0

Area in which an explosive gas atmosphere is present continuously, for long periods or frequently.

Zone 1

Area in which an explosive gas atmosphere is likely to occur periodically or occasionally during normal operation.

Zone 2

Area in which an explosive gas atmosphere is unlikely to occur during normal operation; if it does occur, then it is temporarily.

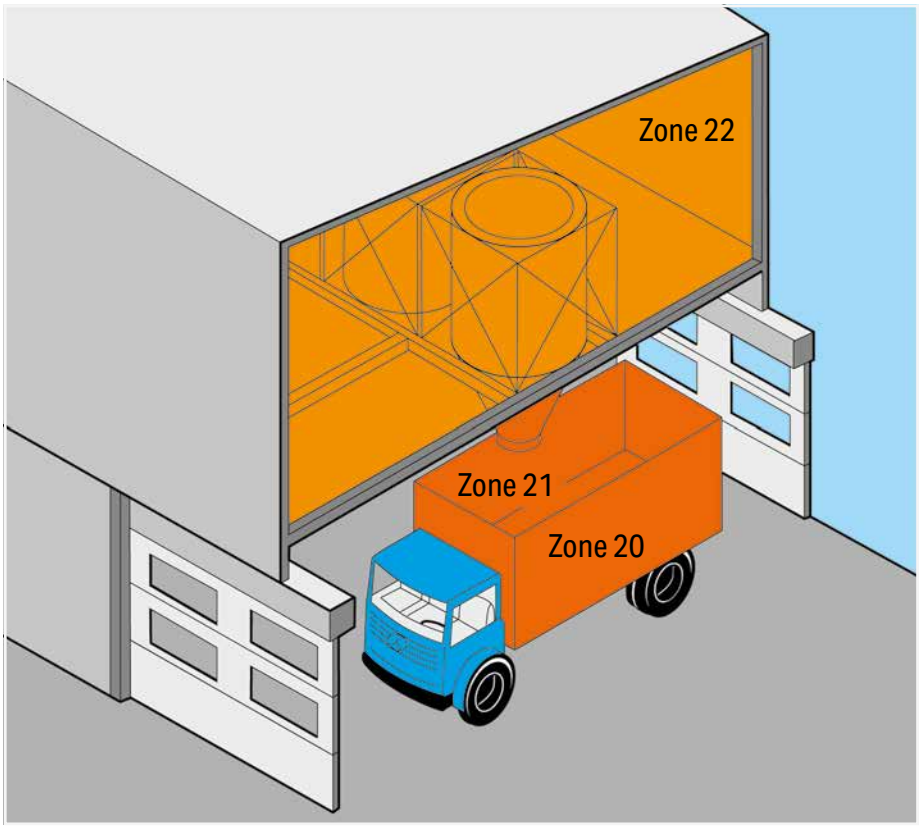

Hazardous areas due to explosive dust/air mixtures:

Zone 20

Area in which an explosive dust atmosphere due to dust/air mixtures is present continuously, for long periods or frequently.

Zone 21

Area in which an explosive dust atmosphere due to dust/air mixtures is likely to occur occasionally during normal operation.

Zone 22

Area in which an explosive dust atmosphere due to flammable dust/air mixtures is unlikely to occur during normal operation; but if it occurs, then only for a short period of time.

EN 60079-0 also classifies electrical equipment for use in hazardous areas into two groups:
Group I:
Electrical equipment for mines susceptible to firedamp
Group II:
Electrical equipment for hazardous areas, except for mines susceptible to firedamp.
As this broad application range encompasses a large number of potentially flammable gases, Group II is broken down into subgroups IIA, IIB and IIC.
This breakdown is based on different gases/materials exhibiting differing ignition power levels as parameters. Therefore, representative gases have been allocated to these three subgroups:
- IIA – Propane
- IIB – Ethylene
- IIC – Hydrogen

WAGO's terminal blocks can be used both in Group I and Group II.

This information is given under Item 12 in the EU Prototype Test Certificates, based on which the terminal blocks have been approved for Group I and Group II.

Temperature Class	Maximum Surface Temperature (°C)
T1	450
T2	300
T3	200
T4	135
T5	100
T6	85

Depending on the maximum surface temperature, electrical equipment in Group II are classified in temperature categories T1 to T6 for all protection types. The surrounding air temperature, which must be accounted for in dimensioning, is defined as 40°C/104°F (deviations are acceptable under some conditions).
Terminal blocks for "eb" (increased safety) protection type are generally assigned to temperature category T 6. When rail-mount terminal blocks are used in equipment of temperature categories T1 to T5, ensure that the highest temperature on the insulating parts does not exceed 85°C (185°F).
The highest measured surface temperature rise must not exceed 40 K.

Thermal resistance of the insulation material must be at least 20°C (68°F) greater than the highest operating temperature. Low temperature stability is considered to be sufficient when the insulation material can withstand 24-hour storage at a temperature of –60°C (–76°F) without nullifying the type of protection.
Special Requirements
"Increased Safety Ex e"
The European EN 60079-7 Standard – VDE 0170-6 Classification, the GB/T 3836.3 in China or the EN IEC 60079-7 Standard in the UK contain special requirements for the design and testing of electrical equipment with "e" (increased safety) protection type for hazardous areas.
This standard is a supplement to EN 60079-0 and applies to equipment or parts thereof that neither generate sparks or arcing under normal operating conditions, nor exhibit hazardous temperatures.
This standard describes special measures, which have to be observed to obtain a safety degree according to the "eb" (increased safety) protection type.
Ex components such as rail-mount terminal blocks are covered by Section 4.2 "Terminal Blocks for External Conductors":
- The connectors must be installed in an enclosure meeting the requirements of a recognized protection type per EN 6007910, EN IEC 60079-0 and GB/T 3836.1, Section 1 or EN 60079-31, GB/T 3836.31.
- When installing the terminal blocks in an enclosure of protection type "e" (increased safety) per EN 60079-7, GB/T 3836.3 or the EN IEC 60079-7 Standard in the UK, the clearances and creepage distances of Table 2 must be observed. When using accessories, the installation instructions of the manufacturer must be observed.
- The terminal blocks can be used both in Group II and Group I, as the standard requirements are identical in this case.
- When terminals with earthing-conductor terminal blocks are mounted side by side, end cover plates or adaptor plates are to be provided.
- The use of this component requires a new assessment by a notified certification agency.

Minimum Ignition Power of Typical Gases:

Explosion Group	I	IIA	IIB	IIC
Gas	Methane	Propane	Ethylene	Hydrogen
Ignition Power	280	250	82	16

The following are the most important design requirements for terminal blocks for external supply conductors to electrical equipment:
These must:
- be sufficiently large to permit reliable connection of external supply conductors with cross section of at least the size required by the nominal current of the equipment
- be protected against self-loosening and designed such that the supply conductors cannot slip out of their clamping units
- be designed such that adequate contact pressure is ensured without damaging the conductors
- be designed such that their contact pressure does not change with temperature cycling
- be equipped with a spring connecting link for the connection of stranded conductors
- be designed so as to allow secure connection of smaller conductors for terminal blocks up to 4 mm² (12 AWG).

General Technical Information on Electrical Equipment Used in Hazardous Areas
Continued

Classification of insulation materials according to their tracking resistance is based on their Comparative Tracking Index (CTI) and is defined in Table 1 as follows:
This classification applies to insulating parts without ribs or grooves.
If the insulating parts have ribs or grooves sufficiently large to be considered, the minimum creepage distances must be set according to values for the insulation materials in the next-higher level (e.g., Group I, instead of Group II).
Accounting for the surrounding air temperature of 40°C (104°F) specified for electrical equipment, the current-carrying capacity of rubber-insulated conductors is reduced to 82%, based on DIN VDE 0298-4:2013-06, Table 12 and to 87% for PVC-insulated conductors for the current-carrying capacity defined for 30°C (86°F) in accordance with DIN VDE 0298-4:2013-06, Item 4.3.3.

It is expressly prohibited to use insulating parts for transferring contact forces. Terminal blocks with sharp edges which could damage supply lines and those types that can be rotated, turned or permanently deformed when fixed in place are not permitted for use. Terminal blocks for internal connections in electrical equipment must not be subjected to excessive mechanical stress. These items must fulfill the requirements for terminal blocks used for external supply conductors.
Clearances between conductive parts having different potentials must be at least 3 mm for external connections, as specified in Table 2.
The value of the creepage distances depends on the working voltage, surface geometry of the insulating parts and tracking resistance of the insulation material.
Grooves on the surface may only be considered if they are at least 2.5 mm deep and wide; ribs on the surface only if their height is at least 2.5 mm and their width corresponds to the mechanical strength of the material, however not smaller than 1 mm.

Conductor Types and Conductor Preparation
In accordance with EN 60079-14/DIN VDE 0165-1, the ends of stranded and fine-stranded conductors must be protected against splaying (e.g., via cable lugs or ferrules) or by the type of terminal blocks used. Soldering alone is not sufficient.
According to EN 60069-7/DIN VDE 0170-6, connecting electrical equipment to terminal blocks having an "eb" (increased safety) protection type must not lead to a reduction of the clearances and creepage distances.
Based on experience through the application of terminal blocks in aggressive atmospheres in the chemical industry, WAGO recommends gas-tight tinned copper ferrules or tinned copper pin terminals when connecting fine-stranded conductors to terminal blocks in corrosive atmospheres.

Table 1– Tracking Resistance for Insulation Materials

Material Group	Comparative Tracking Index
I	600 ≤ CTI
II	400 ≤ CTI < 600
III a	175 ≤ CTI < 400
III b	100 ≤ CTI < 175

Table 2– Minimum Creepage Distances/Clearances and Isolations

Voltage (see [a] and [b]) RMS Value for AC or DC Voltage V	Minimum Creepage Distance mm								Minimum Clearance and Isolations mm		
	Material Group								Clearance mm		Distance under Coating[d]
	I		II		III a		III b				
	"eb"	"ec"	"eb"	"ec"	"eb"	"ec"	"eb"	"ec"	"eb"	"ec"	"ec"
≤ 10 (see [c])	1.6	1	1.6	1	1.6	1	–	1	1.6	0.4	0.3
≤ 12.5	1.6	1.05	1.6	1.05	1.6	1.05	–	1.05	1.6	0.4	0.3
≤ 16	1.6	1.1	1.6	1.1	1.6	1.1	–	1.1	1.6	0.8	0.3
≤ 20	1.6	1.2	1.6	1.2	1.6	1.2	–	1.2	1.6	0.8	0.3
≤ 25	1.7	1.25	1.7	1.25	1.7	1.25	–	1.25	1.7	0.8	0.3
≤ 32	1.8	1.3	1.8	1.3	1.8	1.3	–	1.3	1.8	0.8	0.3
≤ 40	1.9	1.4	2.4	1.6	3	1.8	–	1.8	1.9	0.8	0.6
≤ 50	2.1	1.5	2.6	1.7	3.4	1.9	–	1.9	2.1	0.8	0.6
≤ 63	2.1	1.6	2.6	1.8	3.4	2	–	2	2.1	0.8	0.6
≤ 80	2.2	1.7	2.8	1.9	3.6	2.1	–	2.1	2.2	0.8	0.8
≤ 100	2.4	1.8	3	2	3.8	2.2	–	2.2	2.4	0.8	0.8
≤ 125	2.5	1.9	3.2	2.1	4	2.4	–	2.4	2.5	1	0.8
≤ 160	3.2	2	4	2.2	5	2.5	–	2.5	3.2	1.5	1.1
≤ 200	4	2.5	5	2.8	6.3	3.2	–	3.2	4	2	1.7
≤ 250	5	3.2	6.3	3.6	8	4	–	4	5	2.5	1.7
≤ 320	6.3	4	8	4.5	10	5	–	5	6	3	2.4
≤ 400	8	5	10	5.6	12.5	6.3	–	6.3	6	4	2.4
≤ 500	10	6.3	12.5	7.1	16	8	–	8	8	5	2.4
≤ 630	12	8	16	9	20	10	–	10	10	5.5	2.9
≤ 800	16	10	20	11	25	12.5	–	–	12	7	4
≤ 1000	20	11	25	11	32	13	–	–	14	8	5.8
≤ 1250	22	12	26	12	32	15	–	–	18	10	–
≤ 1600	23	13	27	13	32	17	–	–	20	12	–
≤ 2000	25	14	28	14	32	20	–	–	23	14	–
≤ 2500	32	18	36	18	40	25	–	–	29	18	–
≤ 3200	40	22	45	22	50	32	–	–	36	22	–
≤ 4000	50	28	56	28	63	40	–	–	44	28	–
≤ 5000	63	36	71	36	80	50	–	–	50	36	–
≤ 6300	80	45	90	45	100	63	–	–	60	45	–
≤ 8000	100	56	110	56	125	80	–	–	80	56	–
≤ 10000	125	71	140	71	160	100	–	–	100	70	–
≤ 12500	–	90	–	90	–	125	–	–	–	89	–
≤ 13640	–	98	–	98	–	138	–	–	–	97	–

[a] When determining the required values for creepage distances and clearances, the working voltage may be 1.1 times higher than the value in the table.
NOTE: The factor of 1.1 takes into account that in many places in a circuit the working voltage is equal to the rated voltage and that a number of rated voltages are used, which are covered by a factor of 1.1.
[b] The specified values for creepage distances and clearances already take into account a 10% tolerance for the highest supply voltage. Therefore, further considerations on the voltage fluctuations are unnecessary for determining which voltage value from the table should be used.
[c] CTI values are not applicable for voltages of 10 V or less. Materials that do not meet the requirements of material group III a can be used.
[d] The specified distances under consideration apply to printed circuit boards in protection level "ec" after 4.5.

Approvals

Terminal blocks may be used in Zones 1 and 2, provided that the terminal blocks are accommodated in an enclosure that has a minimum IP54 protection and an Ex e certification.
Terminal blocks are considered to be Ex components because they are a part of the equipment.
Part certificates provided by Ex Certification Agencies serve as a basis for issuing the complete conformity declaration for the unit.
An EC-type examination certificate is issued in accordance with the 2014/34/EU ATEX Directive.
In addition, an IEXEx Certificate may also be obtained from an appropriate, recognized certification agency in accordance with the IECEx Certification Agreement that is accepted throughout Europe and also in countries such as Canada, China and Australia.
These certificates can also be viewed at: www.iecex.com.

EC-type examination certificates have been granted to all WAGO terminal blocks listed in this catalog.
WAGO terminal blocks approved for use in Ex e II areas are manufactured of flame-resistant, self-extinguishing Polyamide 66. The same applies to the terminal blocks used in non-hazardous areas. Tracking resistance with a CTI value of 600 as per IEC 60112 and a constant operating temperature of 105°C (22°F) in accordance with IEC 60216-1 and -2 are provided. Factory part quality tests are performed on all PCB terminal blocks with Ex e II approval to monitor and ensure the quality features described above.

Terminal block marking per 2014/34/EU ATEX Directive:

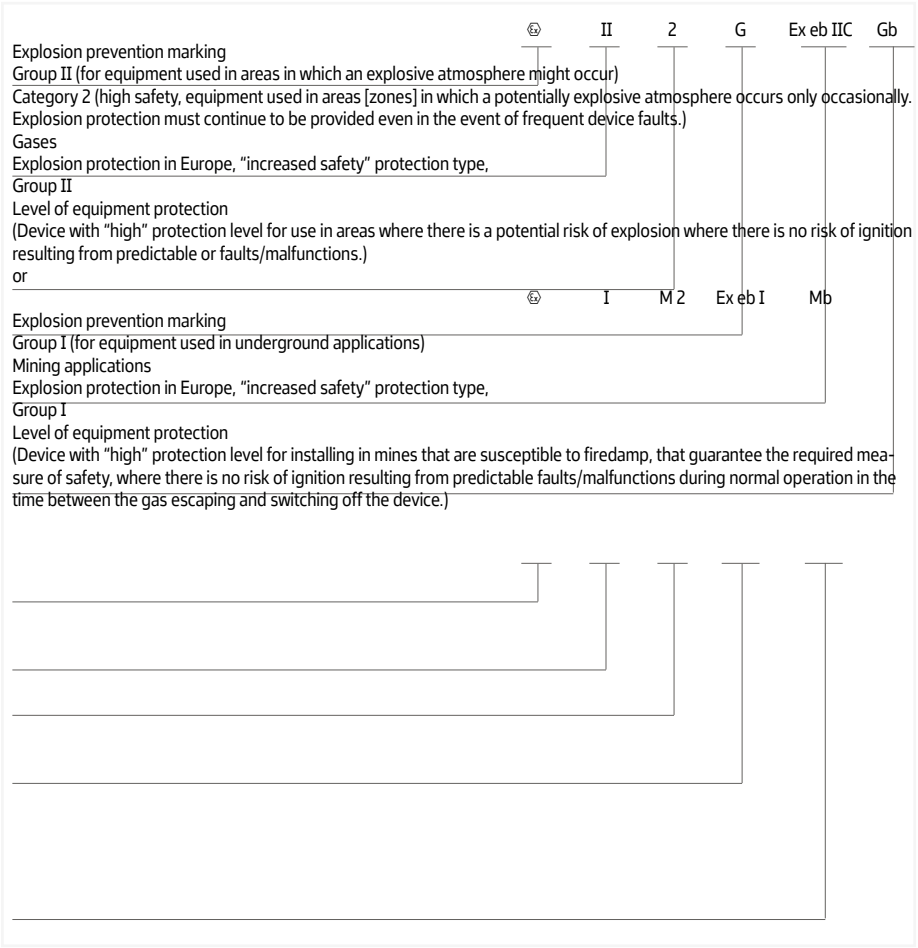



IECEx Certificate of Conformity

INTERNATIONAL ELECTROTECHNICAL COMMISSION
IEC Certification Scheme for Explosive Atmospheres
for rules and details of the IECEx Scheme visit www.iecex.com
Ex COMPONENT CERTIFICATE

Certificate No.: IECEx PTB 18.0012U
Issue No: 0
Certificate history: Issue No. 0 (2018-08-30)
Status: Current
Page 1 of 3
Date of Issue: 2018-08-30
Applicant: WAGO Kontakttechnik GmbH & Co. KG
Hansastraße 27
32423 Minden
Germany
Ex Component: WAGO type PE & Through terminal blocks type TOPJOB S 2202-**** and TOPJOB S 2202-***7

This component is NOT intended to be used alone and requires additional consideration when incorporated into other equipment or systems for use in explosive atmospheres (refer to IEC 60079-0).

Type of Protection: Increased Safety "eb"
Marking: Ex eb IIC Gb and Ex eb I Mb

Approved for issue on behalf of the IECEx Certification Body: Dipl.-Phys. U. Völkel
Position: Department "Explosion Protection in Energy Technology"
Signature: (for printed version)
Date: 31.8.18

1. This certificate and schedule may only be reproduced in full.
2. This certificate is not transferable and remains the property of the issuing body.
3. The Status and authenticity of this certificate may be verified by visiting the Official IECEx Website.

Certificate issued by:
Physikalisch-Technische Bundesanstalt (PTB)
Bundesallee 100
38116 Braunschweig
Germany



Physikalisch-Technische Bundesanstalt
Braunschweig und Berlin
Nationales Metrologieinstitut

EU-Baumusterprüfbescheinigung

(1)
(2) Komponente zur bestimmungsgemäßen Verwendung in explosionsgefährdeten Bereichen
Richtlinie 2014/34/EU
(3) EU-Baumusterprüfbescheinigungsnummer
PTB 18 ATEX 1005 U Ausgabe: 0
(4) Produkt: Durchgangsreihenklemmen Typ TOPJOB S 2202-****
Schutzleiterreihenklemmen Typ TOPJOB S 2202-***7
(5) Hersteller: WAGO Kontakttechnik GmbH & Co. KG
(6) Anschrift: Hansastraße 27, 32423 Minden, Deutschland
(7) Die Bauart dieses Produkts sowie die verschiedenen zulässigen Ausführungen sind in der Anlage und den darin aufgeführten Unterlagen zu dieser Baumusterprüfbescheinigung festgelegt.
(8) Die Physikalisch-Technische Bundesanstalt, notifizierte Stelle Nr. 0102 gemäß Artikel 17 der Richtlinie 2014/34/EU des Europäischen Parlaments und des Rates vom 26. Februar 2014, bescheinigt, dass dieses Produkt die grundlegenden Sicherheits- und Gesundheitsanforderungen für die Konzeption und den Bau von Produkten zur bestimmungsgemäßen Verwendung in explosionsgefährdeten Bereichen gemäß Anhang II der Richtlinie erfüllt.
Die Ergebnisse der Prüfung sind in dem vertraulichen Prüfbericht PTB Ex 18-17171 festgehalten.
(9) Die grundlegenden Sicherheits- und Gesundheitsanforderungen werden erfüllt durch Übereinstimmung mit
IEC 60079-0:2017, EN 60079-7:2015
(10) Das Zeichen "U" hinter der Zertifikatsnummer gibt an, dass dieses Zertifikat nicht mit einem für ein Gerät oder Schutzsystem vorgesehenen Zertifikat verwechselt werden darf. Diese Komponenten-Bescheinigung darf als Basis für die Bescheinigung eines Gerätes oder Schutzsystems verwendet werden.
(11) Diese EU-Baumusterprüfbescheinigung bezieht sich nur auf Konzeption und Prüfung des festgelegten Produkts gemäß Richtlinie 2014/34/EU. Weitere Anforderungen dieser Richtlinie gelten für die Herstellung und das Bereitstellen auf dem Markt. Diese Anforderungen werden nicht durch diese Bescheinigung abgedeckt.
(12) Die Kennzeichnung des Produkts muss die folgenden Angaben enthalten:
Ex II 2 G Ex eb IIC Gb bzw. I M 2 Ex eb I Mb

Konformitätsbewertungsstelle, Sektor Explosionsschutz Braunschweig, 30. August 2018
Im Auftrag
Dipl.-Phys. U. Völkel

Seite 1/3

EU-Baumusterprüfbescheinigungen ohne Unterschrift und ohne Siegel haben keine Gültigkeit.
Diese EU-Baumusterprüfbescheinigung darf nur unverändert weiterverbreitet werden.
Auszüge oder Änderungen bedürfen der Genehmigung der Physikalisch-Technischen Bundesanstalt.
Physikalisch-Technische Bundesanstalt • Bundesallee 100 • 38116 Braunschweig • DEUTSCHLAND

General Technical Information on Electrical Equipment Used in Hazardous Areas
Continued

Special Requirements
Equipment Protection by Intrinsic Safety "i"
The European EN 60079-11 Standard – Classification VDE 0170-7 – contains special requirements for the design and testing of electrical equipment with "i" (intrinsic safety) protection type for use in hazardous areas.
A circuit is "intrinsically safe" when, under normal operating conditions and in the event of specific fault conditions, no sparks or thermal effects can occur and cause the ignition of a certain explosive atmosphere.
A distinction is made here between:
- intrinsically safe electrical equipment when all circuits are intrinsically safe
- associated electrical equipment including both intrinsically and non-intrinsically safe circuits, and being designed such that the non-intrinsically safe circuits cannot affect the intrinsically safe ones.

Intrinsically safe electrical equipment and intrinsically safe parts of associated electrical equipment are classified at "ia", "ib" or "ic" protection level.
Electrical equipment classified Ex "ia" must not ignite when current is applied in the following cases:
a) During fault-free operation, with those non-discreet faults present that result in the most adverse condition
b) During fault-free operation and with a discreet fault, plus those non-discreet faults that result in unfavorable conditions
c) During fault-free operation with two discreet faults, plus those non-discreet faults that result in the most adverse conditions.

Electrical equipment classified Ex "ib" must not ignite when current is applied in the following cases:
a) During fault-free operation, with those non-discreet faults present that result in the most adverse condition;
b) During fault-free operation and with a discreet fault, plus those non-discreet faults that result in unfavorable conditions.

At applied voltages, the intrinsically safe circuits in electrical equipment of protection level "ic" shall not be capable of causing ignition during undisturbed operation and under the conditions specified in this standard.
No special approval is required for terminal blocks used as simple electrical equipment for "Ex i" protection type, as they do not contain a voltage source and precise information is available concerning electrical data and temperature rise performance.
The terminal blocks must be identifiable, for example by their type designation, and the following design requirements must also be upheld:
Clearances and creepage distances between bare conductive parts of terminal blocks of separate intrinsically safe circuits and grounded or floating conductive parts shall be equal to or greater than the values given in Table 5 (see 654). If separate intrinsically safe circuits are to be considered, the air gap between bare conductive parts of the outer connection parts must meet the following requirements:
– at least 6 mm between the separate intrinsically safe circuits
– at least 3 mm from grounded parts, if a possible connection to ground has not been considered in the safety analysis. Each possible motion of metallic parts that are not rigidly secured must be considered.
Terminal block marking must be unique and clearly visible. If a color is used for this, the color must be light blue (similar to RAL 5015).
Note also when using terminal blocks:
Terminal blocks used for intrinsically safe circuits must be isolated from those used in non-intrinsically safe circuits. This is accomplished by several accepted methods. First, intrinsically safe circuits are separated by at least 50 mm of air space from non-intrinsically safe circuits.
Second, intrinsically safe circuits are housed in a separate enclosure. Third, intrinsically safe terminal blocks are separated from non-intrinsically safe terminal blocks by either an insulated partition or grounded metal partition. The partition size must allow for either 1.5 mm or less distance from the sides of the housing or provide at least 50 mm of creepage distance between the intrinsically and non-intrinsically safe circuits in all directions.
The insulation between an intrinsically safe and a non-intrinsically safe circuit has to withstand an effective AC voltage of 2 x nominal value (U) 1000 V or a minimum of 1500 kV, whereby U represents the total of the effective voltages of the intrinsically safe and the non-intrinsically safe circuit.
Short circuit between different intrinsically safe circuits could cause dangerous conditions. The insulation between these circuits should withstand an effective voltage of at least 500 VAC or 2 UAC where U is the total of the effective voltages of the related circuits.
In accordance with EN 60079-14/
DIN VDE 0165-1, in intrinsically safe circuits, the ends of stranded and fine-stranded conductors must be protected against splaying (e.g., via cable lugs or ferrules) or by the type of terminal blocks used. Soldering alone is not sufficient.
WAGO recommends gas-tight tinned copper ferrules or tinned copper pin terminals when connecting fine-stranded conductors to terminal blocks in corrosive atmospheres.

Requirements pertaining to the necessary distances as appropriate for use of the terminal blocks in the area DIN EN 60079-11 (VDE 0170-7) "Explosive atmosphere – Part 11: Device protection by intrinsically safe features "i" (IEC 60079-11)" are defined under Section 6.2 "Connecting point for external circuits," Section 6.2.1 "Terminal blocks." In general, the following can be stated for terminal blocks based on figure 1: "Example of isolated intrinsically safe terminal blocks with partition" in conjunction with figure 2: "Example of isolation of conductive parts," considering Table 5 – "Clearances, Creepage and Isolation Distances."
Outside:
a) Isolated intrinsically safe circuits: at least 6 mm
All PCB terminal blocks listed on the ordering pages as suitable for Ex "i" applications fulfill these requirements.
b) Intrinsically safe circuits and normal circuits (non-intrinsically safe): ≥ 50 mm
Inside:
a) Ex "i" to Ex "i"
b) Ex "i" to normal circuits
c) Ex "i" to ground
Based on Figure 2 and Table 5 (see next page) in accordance with the selected protection level and the special requirements for isolation distances as described in Sections 6.3.1 to 6.3.13, or in accordance with the alternative procedure for dimensioning of isolation distances given in Annex F.
Terminal blocks with smaller pin spacing may also be used for internal connections, provided they meet the requirements laid out in Table 5 (see below).
The exact clearances and creepage distances as well as separation distances based on Table 5 must be derived from the application items cited above.

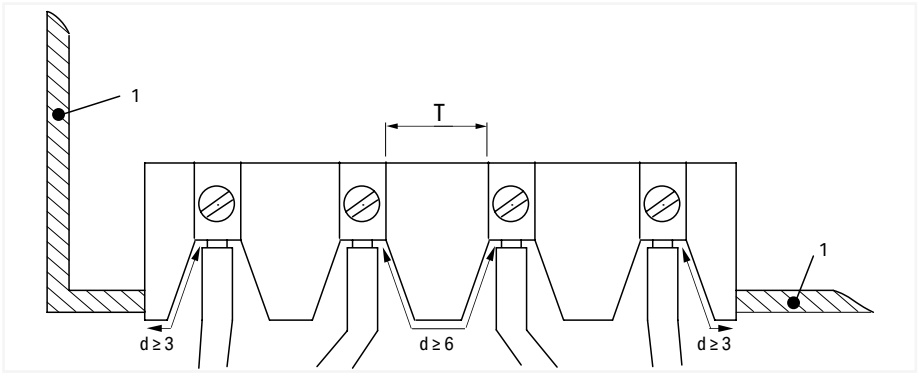

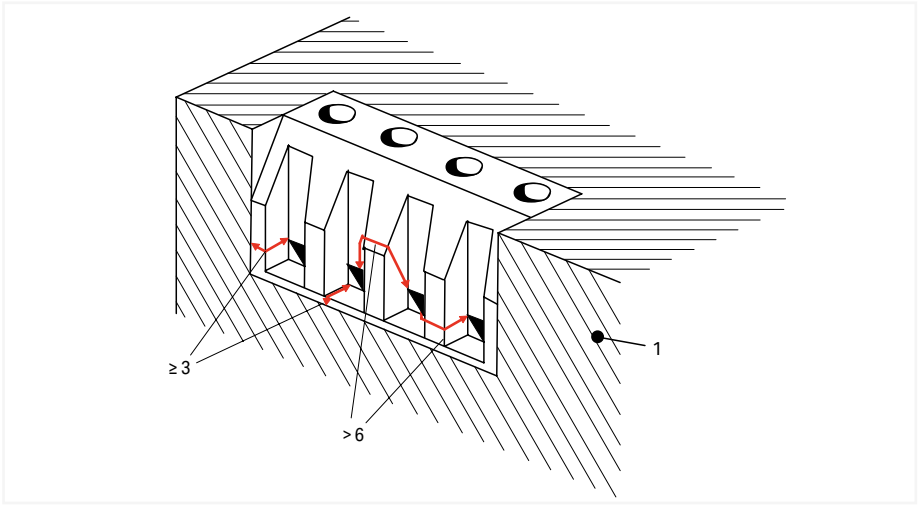

Legend:

1	Conductive cover
T	Distances based on Table 5
d	Distance at outer connecting parts of the terminal blocks according to 6.2.1

Note:
The dimensions indicated here represent the clearances and creepage distances around the insulation and not the thickness of the insulation.
Dimensions in mm

Figure 1a: Requirements for clearances and creepage distances for terminal blocks with isolated, intrinsically safe circuits

General Technical Information on Electrical Equipment Used in Hazardous Areas
Continued

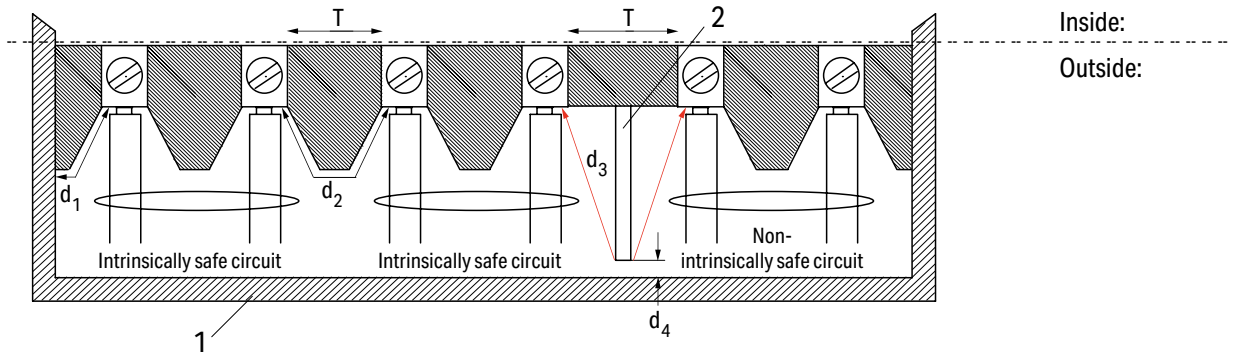

Figure 1b: Example of isolated intrinsically safe and non-intrinsically safe terminal blocks by a partition

Legend:

1 Cover: non-conductive or conductive and grounded

2 Partition based on 6.2.1 b); in this example, the partition must end at the base

T Distances based on Table 5

d1 ≥ 3 mm, when the cover is conductive and grounded

d2 ≥ 6 mm

d3 ≥ 50 mm or d4 ≤ 1.5 mm

Note:
The dimensions indicated here represent the clearances around the insulation and not the thickness of the insulation.

Table 5 – Clearances, Creepage and Isolation Distances

1	2		3		4		5		6		7	
Voltage (Peak) (V)	Clearance (in mm)		Separation by Encapsulation (in mm)		Separation by Fixed Insulation (in mm)		Creepage Distance through Air (in mm)		Creepage Distance beneath Protective Layer (in mm)		Comparative Tracking Index (CTI)	
Protection Level	ia, ib	ic	ia, ib	ic	ia, ib	ic	ia, ib	ic	ia, ib	ic	ia	ib, ic
10	1.5	0.4	0.5	0.2	0.5	0.2	1.5	1.0	0.5	0.3	--	
30	2.0	0.8	0.7	0.2	0.5	0.2	2.0	1.3	0.7	0.3	100	100
60	3.0	0.8	1.0	0.3	0.5	0.3	3.0	1.9	1.0	0.6	100	100
90	4.0	0.8	1.3	0.3	0.7	0.3	4.0	2.1	1.3	0.6	100	100
190	5.0	1.5	1.7	0.6	0.8	0.6	8.0	2.5	2.6	1.1	175	175
375	6.0	2.5	2.0	0.6	1.0	0.6	10.0	4.0	3.3	1.7	175	175
550	7.0	4.0	2.4	0.8	1.2	0.8	15.0	6.3	5.0	2.4	275	175
750	8.0	5.0	2.7	0.9	1.4	0.9	18.0	10.0	6.0	2.9	275	175
1000	10.0	7.0	3.3	1.1	1.7	1.1	25.0	12.5	8.3	4.0	275	175
1300	14.0	8.0	4.6	1.7	2.3	1.7	36.0	13.0	12.0	5.8	275	175
1575	16.0	10.0	5.3	*	2.7	*	49.0	15.0	16.3	*	275	175
3.3k	*	18.0	9.0	*	4.5	*	*	32.0	*	*	*	*
4.7k	*	22.0	12.0	*	6.0	*	*	50.0	*	*	*	*
9.5k	*	45.0	20.0	*	10.0	*	*	100.0	*	*	*	*
15.6k	*	70.0	33.0	*	16.5	*	*	150.0	*	*	*	*

Note 1: *At present, no values have been recommended for these voltages.
Note 2: Proof of fulfillment of the CTI requirements for the insulating materials must be provided by the manufacturer.
Defining a CTI is not required for insulation materials for voltage levels up to 10 V.

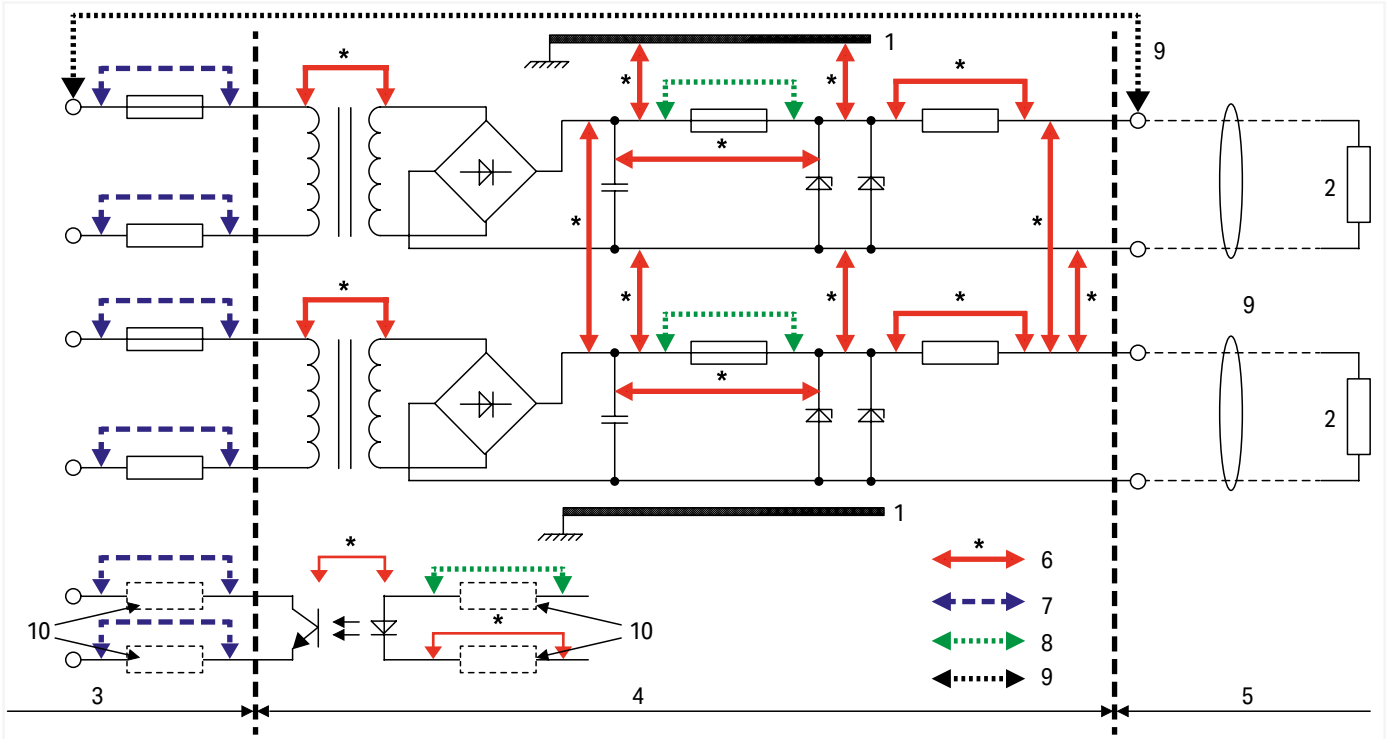

Figure 2: Isolation examples for conductive parts

Legend:

1	Chassis
2	Load
3	Non-intrinsically safe circuit defined by Um
4	Portion of intrinsically safe circuit, item is not intrinsically safe
5	Intrinsically safe circuit
6	Dimensions for which Table 5 applies
7	Dimensions for which general industrial standards apply
8	Dimensions per 7.3
9	Dimensions based on 6.2.1 for output terminal blocks between isolated intrinsically safe circuits (d2 ≥ 6 mm) and between intrinsically safe circuits and non-intrinsically safe circuits (d3 ≥ 50 mm)
10	Where required

In accordance with DIN EN 60079-14 (VDE 0165-1), in intrinsically safe circuits, the ends of stranded and fine-stranded conductors must be protected against splaying (e.g., via cable lugs or ferrules) or by the type of terminal blocks used. Soldering alone is not sufficient.
The conductor entry funnels of WAGO PCB terminal blocks fulfill this requirement.
WAGO recommends gas-tight tinned copper ferrules or tinned copper pin terminals when connecting fine-stranded conductors to terminal blocks in corrosive atmospheres.

International Certification Organizations – Overview

		Abbreviation
	Underwriters Laboratories USA http://www.ul.com	UL
	Underwriters Laboratories USA http://www.ul.com	UL
	Underwriters Laboratories USA http://www.ul.com	cURus
	Underwriters Laboratories USA http://www.ul.com	cULus
	Canadian Standards Association Canada http://www.csa.ca	CSA
VDE REG XXXX	VDE-Gutachten mit Fertigungsüberwachung Germany http://www.vde.de/vde/html/e/home.htm	VDE
	VDE – Deutscher Verband für Elektrotechnik Germany http://www.vde.de	
VDE	VDE – Prüfbericht Germany	
	Österreichischer Verband für Elektrotechnik Austria http://www.ove.at	ÖVE
	Schweizerischer Elektrotechnischer Verein Switzerland http://www.sev.ch/	SEV
KEMA KEUR	N.V. tot Keuring van Elektrotechnische Materialien Netherlands http://www.kema.nl	KEMA
CCA	CENELEC CERTIFICATION AGREEMENT N.V. tot Keuring van Elektrotechnische Materialien Netherlands http://www.cenelec.org	CCA Zul.-Nr. mit NL
	Norges Elektriske Materialkontroll Norway http://express.nemko.com	NEMKO
	Svenska Elektriska Materielkontrollanstalten AB Sweden http://www.semko.com	SEMKO

		Abbreviation
	Danmarks Elektriske Materielkontrol Denmark http://www.demko.dk	DEMKO
CCA	CENELEC CERTIFICATION AGREEMENT Danmarks Elektriske Materielkontrol Denmark http://www.cenelec.org	CCA Zul.-Nr. mit NL
	SETI – FEMKO Sähkötarkastuskeskus Elinspektionscentralen Finland http://www.seti.fi	
	Sähkötarkastuskeskus Elinspektionscentralen Finland http://www.fimko.com	FIMKO
SABS	South African Bureau of Standards South Africa http://www.sabs.co.za	SABS
	RosTesT Russia http://www.rostest.ru	ROTEST
	Departamentul Moldovastandard Moldova http://www.moldova.md/ro/government/oll/D_STAND/en/strcent2.htm	CSM
	Certificate of Registration Great Britain http://www.astacertification.com	ASTA
	Rheinisch-Westfälischer Technischer Überwachungsverein e.V. Germany http://www.rwtuv.de	RWTÜV
	Elektrotechnick´y v´yskumn´y a projektov´y ústav Czech Republic http://www.ezu.cz	EZU
	Stowarzyszenie Elektrykow Polskich Poland http://www.sep.com.pl	BBJ
	Stowarzyszenie Elektrykow Polskich Poland http://www.bbj.pl	SEP

		Abbreviation
CNET	**Centre National d'Etudes des Télécommunications** **France** http://www.lannion.cnet.fr	**CNET**
LCIE	**Laboratoire Central des Industries Electriques** **France** http://www.lcie.fr	**LCIE**
	Fyzikálne Technick´yZkusební Ústav, Ostrava-Radvanice **Czech Republic** http://www.ftzu.cz	**FTZU**
Marine Approvals		
BV	**Bureau Veritas** **France** http://www.bureauveritas.fr	**BV**
	Lloyd's Register of Shipping **Great Britain** http://www.lloydsregister.com	**LR**
DNV · GL	**NV – Det Norske Veritas** **Norway** http://www.dnvgl.com	**DNV-GL**
	Russian Maritime Register of Shipping **GUS** http://www.rs-head.spb.ru	**RMR**
	Polski Rejestr Statków **Poland** http://www.prs.pl	**PRS**
	Korean Register of Shipping **Korea** http://www.krs.co.kr	**KR**
ABS	**American Bureau of Shipping** **USA** http://www.eagle.org	**ABS**

		Abbreviation
	Robbanásbiztos Villamos Berendezések **Hungary** http://www.bki.hu	**BKI**
CB	**CB – TEST CERTIFICATE** **India** http://www.ul-europe.com	**CB**
CB	**CB – TEST CERTIFICATE** **China** http://www.ul-europe.com	**CB**
	http://www.enec.com	**ENEC**
EX Approvals		
PTB	**Physikalisch Technische Bundesanstalt** **Germany** http://www.ptb.de	**PTB**
c UL us	**Underwriters Laboratories** **USA** http://www.ul.com	**AEx**

Electrical Engineering Laboratory
Product Safety for Our Customers

To use terminal blocks globally, they must satisfy certain standards and obtain test certificates. These requirements apply to every manufacturer. WAGO also conducts its own tests to increase standards and offer greater reliability with its products. Products undergo a full range of mechanical, electrical and climatic testing, and we'll share a few of those processes with you.

WAGO Test Lab

This means that WAGO's products can be used safely and reliably both in Europe and anywhere globally for a wide variety of applications. We heavily emphasize the importance of global acceptance during development. As a result, we can present documentation that verifies our high levels of product safety and reliability while ensuring the fulfillment and accuracy of technical data, which are the highest priorities for our customers and users worldwide.
On December 22, 2009, our test lab was accredited by the German Accreditation Association (Deutsche Gesellschaft für Akkreditierung GmbH) in accordance with DIN EN ISO/IEC 17025.

Pull-Out Test (per EN 60947-7-1, EN 60998-2-2)

During the pull-out force test, a conductor is pulled on until it is removed from the clamping unit. The design of the terminals means that extraction only occurs after the standard pull-out force has been exceeded many times over.



Vibration Test (per IEC/EN 60068-2-6)

Depending on the application, such as railway (per EN 61373) or marine (per GL, LR, DNV), there are various testing requirements to determine if the long-term effects of vibrations degrade electrical connections. The test specimen is subjected to different loads on three axes in an electrodynamic vibration system. The amplitude, the acceleration, and particularly the frequency of the vibration vary during the test. The test values are increased many times over the standard values to meet special customer requirements.

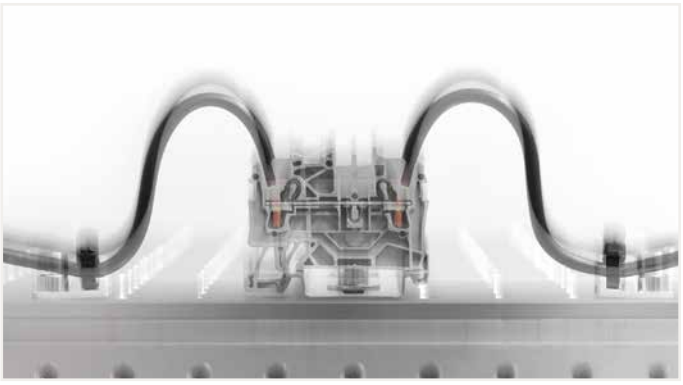

Shock Test (per IEC/EN 60068-2-27)

The shock test is very similar to the vibration test except that, instead of continuous vibrations, single shocks are applied to the test specimen. Shock tests are usually performed, for example, at an acceleration of 20g over a period of 11 ms. Tests for special requirements often call for much higher values and are also conducted in our laboratory..



Voltage Drop Test under Bending Stress (per WAGO test requirements)

The voltage drop test under bending stress simulates mechanical stress on the clamping unit. In everyday use, this stress can occur during installation, for example, when an electrician shoves connected conductors to the side in order to access a specific component. The quality of the clamping unit when moving a connected conductor can be validated by the constantly stable measured value of the voltage drop.



DAkkS
Deutsche
Akkreditierungsstelle

Deutsche Akkreditierungsstelle GmbH

Entrusted according to Section 8 subsection 1 AkkStelleG in connection with Section 1 subsection 1 AkkStelleGBV
Signatory to the Multilateral Agreements of EA, ILAC and IAF for Mutual Recognition

Accreditation

The Deutsche Akkreditierungsstelle GmbH attests that the testing laboratory

WAGO GmbH & Co. KG
Hansastraße 27, 32423 Minden

is competent under the terms of DIN EN ISO/IEC 17025:2018 to carry out tests in the following fields:

Electrical and mechanical testing of terminals and connectors and environmental simulation

The accreditation certificate shall only apply in connection with the notice of accreditation of 18.05.2022 with the accreditation number D-PL-19704-01. It comprises the cover sheet, the reverse side of the cover sheet and the following annex with a total of 9 pages.

Registration number of the certificate: **D-PL-19704-01-00**

Berlin,
29.06.2022

Florian Burkart
Head of Technical Unit

Translation issued:
29.06.2022

Head of Technical Unit

The certificate together with the annex reflects the status as indicated by the date of issue.
The current status of any given scope of accreditation can be found in the directory of accredited bodies maintained by Deutsche Akkreditierungsstelle GmbH at https://www.dakks.de/en/accredited-bodies-search.html.

This document is a translation. The definitive version is the original German accreditation certificate.

See notes overleaf.

WAGO-Seminars
Learn Today – Benefit Tomorrow

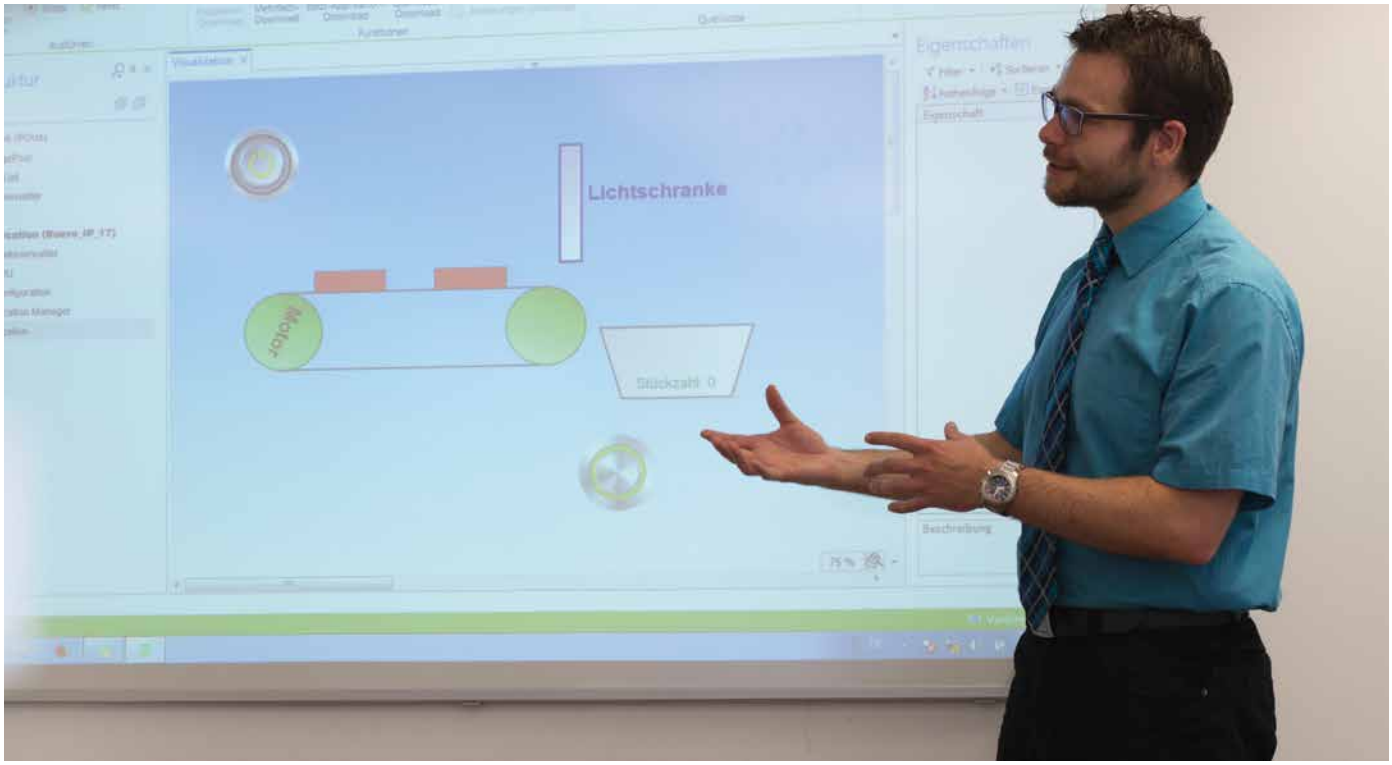

Setting the Bar with Your Goals

Product-Related and Customer-Specific Seminars



Small Groups

The small class sizes of WAGO training seminars ensures that no question goes unanswered and no one is overlooked.



Teamwork

Learning as a group is very effective. Ideas can be discussed and exchanged while experiences can be shared – all for the benefit of the participants.

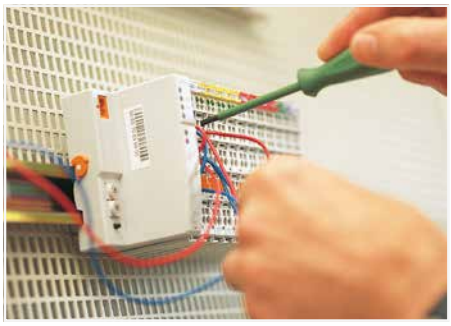

Practical Topics

Experience has shown that practice makes perfect. This is why the focus of every WAGO training seminar is on practical, hands-on learning.

WAGO-Seminars
Experience the Benefits of First-Hand Knowledge and Expertise – Straight from the Source

Our instructors are specialists who know all the ins and outs of WAGO's products. This ensures that the time devoted to each WAGO training seminar is an effective investment in expanding your own expertise.

Request your registration form by email:

training@wago.com

Contact your local WAGO office.

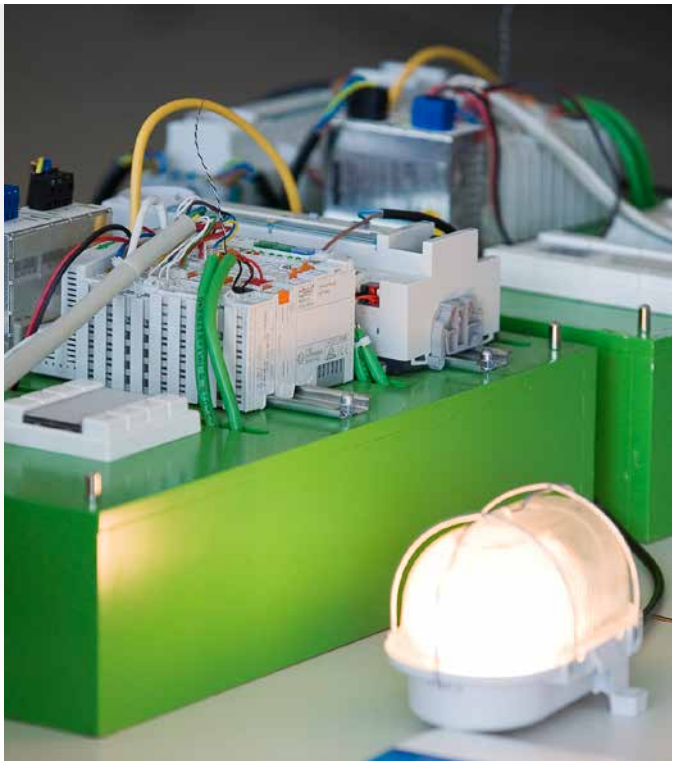

Product-Related Seminars

We regularly offer product-related seminars on the following topics:
- Building and industrial automation
- Programming of automation components
- Fieldbus systems

Current Seminars at:
www.wago.com

Customer-Specific Training Seminars

In addition to these "open" seminars, we also offer seminars specially tailored to your organization and its particular needs.
Upon request, we can also conduct these courses at your location.

Special
Corporate Seminars

Success for Generations: Environmental Protection at WAGO



At WAGO, we see environmental protection not only as compliance with environmental protection requirements.
As a growing company, our commitment to the environment drives our efforts to deliver new ideas, new concepts and new technologies along the product lifecycle. Here our employees and business partners support us.

Corporate Environmental Protection
Business growth also leads to higher consumption of resources. We have realized that the economic success of a company also depends on the achievement of environmental goals.
As a manufacturing company, we therefore support developments that make a contribution to environmental protection. In doing so, we always pursue individual material flows along the value chain, because we see resources, product design, production and consumption as a whole.
With our environmental management system certified in accordance with DIN EN ISO 14001, we ensure that the required national and international requirements are complied with in all areas of the company and that the concept of environmental protection is practiced in all corporate processes.
In addition, WAGO is pursuing further efforts in the field of environmental protection that go far beyond the requirements of ISO
Some examples include the recycling of plastics, resource savings on product and packaging materials, the use of recycled paper throughout the company, the introduction of e-filling stations and the use of waste heat from production processes.

Product-related environmental protection
Product-related environmental protection is an important part of sustainable environmental management at WAGO. Ensuring compliance with substance bans / restrictions worldwide, such as: As REACH, RoHS has a high priority.

RoHS – Restriction of the Use of Certain Hazardous Substances
It is an EC directive that regulates the use of certain hazardous substances in electrical and electronic equipment. In addition to reducing the harmful effects on humans and the environment, legislation aims to improve recycling possibilities. WAGO closely monitors the development regarding RoHS and reacts promptly to specifications accordingly. For more information about RoHS please contact us via ehs-product-compliance@wago.com.

RoHS ✓ Compliant

Success for Generations: Environmental Protection at WAGO

REACH – Registration, Evaluation and Authorisation of Chemicals
On 01.06.2007 the regulation (EC) no. 1907/2006 (REACH regulation) came into force and since then forms a valid legal basis for all EU member states. To protect human health and the environment, this EU Chemicals Regulation aims to classify and identify all chemicals, including their effects.
The REACH Regulation creates specific obligations for each actor in the supply chain. The products manufactured by WAGO are to be designated as products in the sense of the regulation. Since products are not subject to registration, WAGO usually assumes the role of the downstream user in the supply chain. WAGO therefore has an obligation to provide information along the supply chain in accordance with REACH Article 33. WAGO is naturally aware of this obligation.
For more information about our reporting requirements according to REACH Article 33 please visit our website
"REACH SVHC Declaration" via www.wago.com/svhc

BOMcheck
European legislation such as REACH or RoHS requires the provision of information on restricted ingredients in products. This information must be shared by manufacturers and suppliers in the supply chain. WAGO meets this challenge in product-related environmental protection successfully and efficiently with BOMcheck.
BOMcheck is a centralized database for the declaration of ingredients. It is a compliance tool specifically designed to enable manufacturers and suppliers to produce their substance declarations under REACH, RoHS, and other restrictions on ingredients in an efficient and structured manner. This Internet database system increases data quality in the area of product-related environmental protection.
Further information on BOMcheck can be found at the following link: http://www.bomcheck.net

WEEE – Waste of Electrical and Electronic Equipment
The WEEE Directive 2012/19/EU regulates the take-back and recycling of electrical and electronic equipment. Manufacturers and importers of electrical and electronic equipment are obliged to register as a `WEEE producer´ and to comply with the reporting and take-back obligations. As a matter of course, we have taken compliance with legal WEEE requirements very seriously all the time - in our own interest as well as in the well-understood interest of our customers.
Only some of our products fall within the scope of the WEEE Directive and the Member State's implementation laws. These products are WEEE-compliant marked by us, as far as such a marking is legally required (which is not required for the B2B area Europe-wide).
For more information about WEEE please contact us via ehs-product-compliance@wago.com.

Less is More: Our Packaging
Recycling is the basis for choosing our packaging materials. All packaging used by WAGO can be recycled in the economic cycle without further pretreatment. In addition to the aspect of recycling, emphasis is placed on resource conservation. For this reason, our cardboard boxes consist of 80% recycled paper and are marked with the Resy symbol. The Resy symbol guarantees compliance with the Packaging Ordinance for transport packaging. The labeling is partly done by perforation. This process enables the colorless printing of WAGO cardboard boxes. This avoids unnecessary environmental pollution.



Index

Index

	Page
Item Number Index	1149

Newly added items in this catalog:

206-1125
206-1126
206-1127
206-1128
206-1129
206-1131
206-1132
206-1204
206-1205
206-1206
206-1216
206-1225
206-1250
206-1400
206-1403
206-1411
206-1412
206-1413
206-1414
206-1415
206-1418
206-1419
206-1441
206-1442
206-1451
206-1481
206-1482
206-1491
206-1492
231-120/102-000
231-120/125-000
231-146/001-000
236-1731
721-113/125-000
721-114/125-000
721-115/125-000
721-116/125-000
721-202/124-000
721-203/124-000
721-204/124-000
721-205/124-000
721-206/125-000
721-207/125-000
721-208/125-000
721-209/125-000
721-210/125-000
721-211/125-000
721-212/125-000
721-336/008-000
733-368/105-604
733-370
734-132/105-604/997-405
734-270/105-604
740-112/000-006
745-582
745-583
745-584
745-585
828-264/313-000
831-3502
831-3503
831-3504
831-3505
831-3506
831-3507
831-3508
831-3509
831-3522
831-3523
831-3524
831-3525
831-3526
831-3527
831-3528
831-3529
2059-902
2086-1102
2086-3202/300-000/997-604
2086-3202/997-604
2086-3203/300-000/997-605
2086-3203/997-605
2086-3204/300-000/997-605
2086-3204/997-605
2086-3205/300-000/997-607
2086-3205/997-607
2086-3206/300-000/997-607
2086-3206/997-607
2086-3207/300-000/997-607
2086-3207/997-607
2086-3208/300-000/997-607
2086-3208/997-607
2086-3222/300-000/997-604
2086-3222/997-604
2086-3225/300-000/997-607
2086-3225/997-607
2086-3226/300-000/997-607
2086-3226/997-607
2086-3227/300-000/997-607
2086-3227/997-607
2086-3228/300-000/997-607
2086-3228/997-607
2091-1422/200-000/997-405
2091-1422/200-604
2091-1423/200-000/997-406
2091-1424/200-000/997-406
2091-1424/200-604
2091-1425/200-000/997-406
2091-1426/200-000/997-406
2091-1426/200-604
2091-1427/200-000/997-406
2091-1428/200-000/997-406
2091-1430/200-000/997-408
2091-1430/200-604
2091-1432/200-000/997-408
2092-1427/200-000
2092-1429/200-000
2231-1103/328-000
2231-1104/328-000
2231-1107/038-000
2231-1107/327-000
2231-1602
2231-1603
2231-1604
2231-1605
2231-1606
2231-1607
2231-1608
2231-1610
2231-1612
2231-1616
2232-1202/038-000
2232-1202/327-000
2232-1203/038-000
2232-1204/038-000
2601-1302
2601-1303
2601-1304
2601-1305
2601-1306
2601-1307
2601-1308
2601-1309
2601-1310
2601-1311
2601-1312
2601-1502
2601-1503
2601-1504
2601-1505
2601-1506
2601-1507
2601-1508
2601-1509
2601-1510
2601-1511
2601-1512
2601-3302
2601-3303
2601-3304
2601-3305
2601-3306
2601-3307
2601-3308
2601-3309
2601-3310
2601-3311
2601-3312
2601-3502
2601-3503
2601-3504
2601-3505
2601-3506
2601-3507
2601-3508
2601-3509
2601-3510
2601-3511
2601-3512
2602-1101
2602-1102
2602-1103
2602-1104
2602-1105
2602-1106
2602-1107
2602-1108
2602-1109
2602-1110
2602-1111
2602-1112
2602-3101
2602-3102
2602-3103
2602-3104
2602-3105
2602-3106
2602-3107
2602-3108
2602-3109
2602-3110
2602-3111
2602-3112
2604-1302
2616-2101
2616-2102/020-000
2616-2103/020-000
2616-2104/020-000
2616-2105/020-000
2616-2106/020-000
2616-2107/020-000
2616-2108/020-000
2616-2109/020-000
2616-2110/020-000
2616-2111/020-000
2616-2112/020-000
2721-1107/037-000
2721-1107/326-000
2721-1602
2721-1603
2721-1603/000-040
2721-1603/000-041
2721-1603/000-042
2721-1603/000-043
2721-1604
2721-1604/000-040
2721-1604/000-041
2721-1604/000-042
2721-1604/000-043
2721-1605
2721-1605/000-040
2721-1605/000-041
2721-1605/000-042
2721-1605/000-043
2721-1606
2721-1607
2721-1608
2721-1610
2721-1612
2721-1616
2722-1202/326-000
2722-1205/326-000
2734-402
2734-1112/329-000
2734-1116/329-000

Items discontinued in this catalog:

206-706
206-707
206-808
210-110
226-107
226-108
231-122/027-000
231-167/001-000/105-604/997-407
231-836/001-000/105-604/997-409
231-837/001-000/105-604/997-409
231-838/001-000/105-604/997-409
231-839/001-000/105-604/997-409
231-866/001-000/105-604/997-409
231-867/001-000/105-604/997-409
231-868/001-000/105-604/997-409
231-869/001-000/105-604/997-409
257-601
709-196
734-562
805-302/200-604/997-404
805-303/200-604/997-405
805-304/200-604/997-405
805-305/200-604/997-405
831-3107/107-000
832-1102/342-000
832-1103/343-000
832-1104/344-000
832-1105/345-000
832-1106/344-000
2091-1724/200-000
2092-3305
2232-1206/327-000
2616-3108/020-000
2722-1206/326-000

Item Number Index

Item No.	Page
206 Series	
206-118	1084
206-804	1086
206-810	1086
206-841	1074
206-859	392
206-860	348
206-1125	1079
206-1126	1079
206-1127	1079
206-1128	1079
206-1129	1079
206-1131	1079
206-1132	1079
206-1204	1080
206-1205	1080
206-1206	1080
206-1216	1080
206-1225	1082
206-1250	1082
206-1400	1076
206-1403	1076
206-1411	1076
206-1412	1076
206-1413	1076
206-1414	1076
206-1415	1076
206-1418	1076
206-1419	1076
206-1441	1077
206-1442	1077
206-1451	1077
206-1481	1078
206-1482	1078
206-1491	1078
206-1492	1078
209 Series	
209-120	501
209-130	637
209-132	637
209-137	500
209-147	1071
209-148	642
210 Series	
210-112	1070
210-113	1070
210-114	1070
210-115	1070
210-136	1088
210-191	1069
210-197	1070
210-199	1069
210-250	496
210-251	431
210-331	1068
210-331/250-202	1066
210-331/250-204	1066
210-331/250-206	1066
210-331/250-207	1066
210-331/254-202	1066
210-331/254-204	1066
210-331/254-206	1066
210-331/254-207	1066
210-331/500-103	1067
210-331/500-104	1067
210-331/508-103	1067
210-331/508-104	1067
210-331/750-202	1067
210-331/762-202	1067
210-332	1068
210-332/350-202	1066
210-332/350-204	1066
210-332/350-206	1066
210-332/381-202	1066
210-332/381-204	1066
210-332/381-205	1066
210-332/381-206	1066
210-332/396-202	1066
210-332/396-204	1066

Item No.	Page
210 Series	
210-332/396-205	1066
210-332/396-206	1066
210-332/400-202	1066
210-332/400-204	1066
210-332/400-205	1066
210-332/400-206	1066
210-332/500-202	1067
210-332/500-204	1067
210-332/500-205	1067
210-332/500-206	1067
210-332/508-202	1067
210-332/508-204	1067
210-332/508-205	1067
210-332/508-206	1067
210-332/575-103	1067
210-332/700-102	1067
210-332/700-103	1067
210-332/750-020	1067
210-332/762-020	1067
210-332/1000-202	1068
210-332/1000-204	1068
210-332/1000-206	1068
210-332/1016-202	1068
210-332/1016-204	1068
210-332/1016-206	1068
210-334	1068
210-334/762-202	1068
210-406	1069
210-416	1069
210-493	1069
210-533	1059
210-647	1072
210-648	1072
210-657	1072
210-658	1072
210-719	1072
210-720	1072
210-721	1072
210-722	1072
216 Series	
216-101	1081
216-102	1081
216-103	1081
216-104	1081
216-106	1081
216-107	1081
216-108	1081
216-109	1081
216-110	1081
216-121	1081
216-122	1081
216-123	1081
216-124	1081
216-131	1081
216-132	1081
216-151	1081
216-152	1081
216-201	1081
216-202	1081
216-203	1081
216-204	1081
216-205	1081
216-206	1081
216-207	1081
216-208	1081
216-209	1081
216-210	1081
216-221	1081
216-222	1081
216-223	1081
216-224	1081
216-301	1081
216-302	1081
216-321	1081
216-322	1081
216-413	1083
216-414	1083
216-424	1083
216-425	1083

Item No.	Page
216 Series	
216-435	1083
218 Series	
218-102	97
218-102/000-604	345
218-102/000-604/997-403	345
218-103	97
218-103/000-604	345
218-103/000-604/997-405	345
218-104	97
218-104/000-604	345
218-104/000-604/997-405	345
218-105	97
218-105/000-604	345
218-105/000-604/997-405	345
218-106	97
218-106/000-604	345
218-106/000-604/997-405	345
218-107	97
218-107/000-604	345
218-107/000-604/997-405	345
218-108	97
218-109	97
218-110	97
218-111	97
218-112	97
218-113	97
218-114	97
218-115	97
218-116	97
218-117	97
218-118	97
218-119	97
218-120	97
218-121	97
218-122	97
218-123	97
218-124	97
218-502	97
218-502/000-604	346
218-502/000-604/997-403	346
218-503	97
218-503/000-604	346
218-503/000-604/997-405	346
218-504	97
218-504/000-604	346
218-504/000-604/997-405	346
218-505	97
218-505/000-604	346
218-505/000-604/997-405	346
218-506	97
218-506/000-604	346
218-506/000-604/997-405	346
218-507	97
218-507/000-604	346
218-507/000-604/997-405	346
218-508	97
218-509	97
218-510	97
218-511	97
218-512	97
218-513	97
218-514	97
218-515	97
218-516	97
218-517	97
218-518	97
218-519	97
218-520	97
218-521	97
218-522	97
218-523	97
218-524	97
226 Series	
226-101	1015
226-102	1013
226-103	1017
226-104	1015
226-109	1013

Item No.	Page
226 Series	
226-110	1013
226-111	1015
226-112	1013
226-113	1017
226-114	1015
226-119	1013
226-120	1013
231 Series	
231-100	265
231-102/008-000	660
231-102/026-000	659
231-102/031-000	660
231-102/037-000	660
231-102/102-000	659
231-102/124-000	661
231-103/008-000	660
231-103/026-000	659
231-103/031-000	660
231-103/037-000	660
231-103/102-000	659
231-103/124-000	661
231-104/008-000	660
231-104/026-000	659
231-104/031-000	660
231-104/037-000	660
231-104/102-000	659
231-104/124-000	661
231-105/008-000	660
231-105/026-000	659
231-105/031-000	660
231-105/037-000	660
231-105/102-000	659
231-105/124-000	661
231-106/008-000	660
231-106/026-000	659
231-106/027-000	661
231-106/031-000	660
231-106/037-000	660
231-106/102-000	659
231-106/125-000	661
231-107/008-000	660
231-107/026-000	659
231-107/027-000	661
231-107/031-000	660
231-107/037-000	660
231-107/102-000	659
231-107/125-000	661
231-108/008-000	660
231-108/026-000	659
231-108/027-000	661
231-108/031-000	660
231-108/037-000	660
231-108/102-000	659
231-108/125-000	661
231-109/008-000	660
231-109/026-000	659
231-109/027-000	661
231-109/031-000	660
231-109/037-000	660
231-109/102-000	659
231-109/125-000	661
231-110/008-000	660
231-110/026-000	659
231-110/027-000	661
231-110/031-000	660
231-110/037-000	660
231-110/102-000	659
231-110/125-000	661
231-111/008-000	660
231-111/026-000	659
231-111/027-000	661
231-111/031-000	660
231-111/037-000	660
231-111/102-000	659
231-111/125-000	661
231-112/008-000	660
231-112/026-000	659
231-112/027-000	661
231-112/031-000	660

Item Number Index

Item No.	Page
231 Series	
231-112/037-000	660
231-112/102-000	659
231-112/125-000	661
231-113/008-000	660
231-113/026-000	659
231-113/027-000	661
231-113/031-000	660
231-113/037-000	660
231-113/102-000	659
231-113/125-000	661
231-114/008-000	660
231-114/026-000	659
231-114/027-000	661
231-114/031-000	660
231-114/037-000	660
231-114/102-000	659
231-114/125-000	661
231-115/008-000	660
231-115/026-000	659
231-115/027-000	661
231-115/031-000	660
231-115/037-000	660
231-115/102-000	659
231-115/125-000	661
231-116/008-000	660
231-116/026-000	659
231-116/027-000	661
231-116/031-000	660
231-116/037-000	660
231-116/102-000	659
231-116/125-000	661
231-117/008-000	660
231-117/026-000	659
231-117/027-000	661
231-117/031-000	660
231-117/037-000	660
231-117/102-000	659
231-118/008-000	660
231-118/026-000	659
231-118/027-000	661
231-118/031-000	660
231-118/037-000	660
231-118/102-000	659
231-119/008-000	660
231-119/026-000	659
231-119/027-000	661
231-119/031-000	660
231-119/037-000	660
231-119/102-000	659
231-120/008-000	660
231-120/026-000	659
231-120/027-000	661
231-120/031-000	660
231-120/037-000	660
231-120/102-000	659
231-120/125-000	661
231-121/008-000	660
231-121/026-000	659
231-121/027-000	661
231-121/031-000	660
231-121/037-000	660
231-121/102-000	659
231-122/008-000	660
231-122/026-000	659
231-122/031-000	660
231-122/037-000	660
231-122/102-000	659
231-123/008-000	660
231-123/026-000	659
231-123/027-000	661
231-123/031-000	660
231-123/037-000	660
231-123/102-000	659
231-124/008-000	660
231-124/026-000	659
231-124/027-000	661
231-124/031-000	660
231-124/037-000	660
231-124/102-000	659
231-125	265
231-126	266

Item No.	Page
231 Series	
231-127	265
231-128	265
231-129	638
231-130	638
231-131	636
231-132/001-000	687
231-132/001-000/105-604	700
231-132/001-000/105-604/997-405	700
231-132/040-000	688
231-133/001-000	687
231-133/001-000/105-604	700
231-133/001-000/105-604/997-405	700
231-133/040-000	688
231-134/001-000	687
231-134/001-000/105-604	700
231-134/001-000/105-604/997-407	700
231-135/001-000	687
231-135/001-000/105-604	700
231-135/001-000/105-604/997-407	700
231-135/040-000	688
231-136/001-000	687
231-136/001-000/105-604	700
231-136/001-000/105-604/997-407	700
231-136/040-000	688
231-137/001-000	687
231-137/001-000/105-604	700
231-137/001-000/105-604/997-407	700
231-138/001-000	687
231-138/001-000/105-604	700
231-138/001-000/105-604/997-407	700
231-139/001-000	687
231-139/001-000/105-604	700
231-139/001-000/105-604/997-409	700
231-140/001-000	687
231-140/001-000/105-604	700
231-140/001-000/105-604/997-409	700
231-141/001-000	687
231-141/001-000/105-604	700
231-141/001-000/105-604/997-409	700
231-142/001-000	687
231-142/001-000/105-604	700
231-142/001-000/105-604/997-409	700
231-143/001-000	687
231-144/001-000	687
231-144/040-000	688
231-145/001-000	687
231-146/001-000	687
231-147/001-000	687
231-148/001-000	687
231-149/001-000	687
231-150/001-000	687
231-151/001-000	687
231-152/001-000	687
231-153/001-000	687
231-154/001-000	687
231-155	269
231-159	636
231-160	814
231-161	265
231-162/001-000	693
231-162/001-000/105-604	704
231-162/001-000/105-604/997-405	704
231-162/040-000	694
231-163/001-000	693
231-163/001-000/105-604	704
231-163/001-000/105-604/997-405	704
231-163/040-000	694
231-164/001-000	693
231-164/001-000/105-604	704
231-164/001-000/105-604/997-407	704
231-165/001-000	693
231-165/001-000/105-604	704
231-165/001-000/105-604/997-407	704
231-165/040-000	694
231-166/001-000	693
231-166/001-000/105-604	704
231-166/001-000/105-604/997-407	704
231-166/040-000	694
231-167/001-000	693
231-167/001-000/105-604	704
231-168/001-000	693

Item No.	Page
231 Series	
231-168/001-000/105-604	704
231-168/001-000/105-604/997-407	704
231-169/001-000	693
231-169/001-000/105-604	704
231-169/001-000/105-604/997-409	704
231-170/001-000	693
231-170/001-000/105-604	704
231-170/001-000/105-604/997-409	704
231-171/001-000	693
231-171/001-000/105-604	704
231-171/001-000/105-604/997-409	704
231-172/001-000	693
231-172/001-000/105-604	704
231-172/001-000/105-604/997-409	704
231-173/001-000	693
231-174/001-000	693
231-174/040-000	694
231-175/001-000	693
231-176/001-000	693
231-177/001-000	693
231-178/001-000	693
231-179/001-000	693
231-180/001-000	693
231-181/001-000	693
231-182/001-000	693
231-183/001-000	693
231-184/001-000	693
231-193	818
231-194	500
231-195	500
231-202/008-000	739
231-202/026-000	739
231-202/031-000	740
231-202/037-000	739
231-203/008-000	739
231-203/026-000	739
231-203/031-000	740
231-203/037-000	739
231-204/008-000	739
231-204/026-000	739
231-204/031-000	740
231-204/037-000	739
231-205/008-000	739
231-205/026-000	739
231-205/031-000	740
231-205/037-000	739
231-206/008-000	739
231-206/026-000	739
231-206/027-000	740
231-206/031-000	740
231-206/037-000	739
231-207/008-000	739
231-207/026-000	739
231-207/027-000	740
231-207/031-000	740
231-207/037-000	739
231-208/008-000	739
231-208/026-000	739
231-208/027-000	740
231-208/031-000	740
231-208/037-000	739
231-209/008-000	739
231-209/026-000	739
231-209/027-000	740
231-209/031-000	740
231-209/037-000	739
231-210/008-000	739
231-210/026-000	739
231-210/027-000	740
231-210/031-000	740
231-210/037-000	739
231-211/008-000	739
231-211/026-000	739
231-211/027-000	740
231-211/031-000	740
231-211/037-000	739
231-212/008-000	739
231-212/026-000	739
231-212/027-000	740
231-212/031-000	740
231-212/037-000	739

Item No.	Page
231 Series	
231-213/008-000	739
231-213/026-000	739
231-213/027-000	740
231-213/031-000	740
231-213/037-000	739
231-216/008-000	739
231-216/026-000	739
231-216/027-000	740
231-216/031-000	740
231-216/037-000	739
231-231	636
231-232/001-000	765
231-232/001-000/105-604	774
231-232/001-000/105-604/997-405	774
231-233/001-000	765
231-233/001-000/105-604	774
231-233/001-000/105-604/997-407	774
231-234/001-000	765
231-234/001-000/105-604	774
231-234/001-000/105-604/997-407	774
231-235/001-000	765
231-235/001-000/105-604	774
231-235/001-000/105-604/997-407	774
231-236/001-000	765
231-236/001-000/105-604	774
231-236/001-000/105-604/997-409	774
231-237/001-000	765
231-237/001-000/105-604	774
231-237/001-000/105-604/997-409	774
231-238/001-000	765
231-238/001-000/105-604	774
231-238/001-000/105-604/997-409	774
231-239/001-000	765
231-239/001-000/105-604	774
231-239/001-000/105-604/997-409	774
231-240/001-000	765
231-240/001-000/105-604	774
231-240/040-000	766
231-241/001-000	765
231-241/001-000/105-604	774
231-242/001-000	765
231-242/001-000/105-604	774
231-243/001-000	765
231-246/001-000	765
231-262/001-000	769
231-262/001-000/105-604	778
231-262/001-000/105-604/997-405	778
231-263/001-000	769
231-263/001-000/105-604	778
231-263/001-000/105-604/997-407	778
231-264/001-000	769
231-264/001-000/105-604	778
231-264/001-000/105-604/997-407	778
231-265/001-000	769
231-265/001-000/105-604	778
231-265/001-000/105-604/997-407	778
231-266/001-000	769
231-266/001-000/105-604	778
231-266/001-000/105-604/997-409	778
231-267/001-000	769
231-267/001-000/105-604	778
231-267/001-000/105-604/997-409	778
231-268/001-000	769
231-268/001-000/105-604	778
231-268/001-000/105-604/997-409	778
231-269/001-000	769
231-269/001-000/105-604	778
231-269/001-000/105-604/997-409	778
231-270/001-000	769
231-270/001-000/105-604	778
231-270/040-000	770
231-271/001-000	769
231-271/001-000/105-604	778
231-272/001-000	769
231-272/001-000/105-604	778
231-273/001-000	769
231-276/001-000	769
231-291	636
231-295	1071
231-300	265
231-302/008-000	708

Item Number Index

Item No.	Page
231 Series	
231-302/026-000	707
231-302/031-000	709
231-302/037-000	708
231-302/102-000	707
231-302/107-000	708
231-303/008-000	708
231-303/026-000	707
231-303/031-000	709
231-303/037-000	708
231-303/102-000	707
231-303/107-000	708
231-304/008-000	708
231-304/026-000	707
231-304/031-000	709
231-304/037-000	708
231-304/102-000	707
231-304/107-000	708
231-305/008-000	708
231-305/026-000	707
231-305/031-000	709
231-305/037-000	708
231-305/102-000	707
231-305/107-000	708
231-306/008-000	708
231-306/026-000	707
231-306/027-000	709
231-306/031-000	709
231-306/037-000	708
231-306/102-000	707
231-306/107-000	708
231-307/008-000	708
231-307/026-000	707
231-307/027-000	709
231-307/031-000	709
231-307/037-000	708
231-307/102-000	707
231-307/107-000	708
231-308/008-000	708
231-308/026-000	707
231-308/027-000	709
231-308/031-000	709
231-308/037-000	708
231-308/102-000	707
231-308/107-000	708
231-309/008-000	708
231-309/026-000	707
231-309/027-000	709
231-309/031-000	709
231-309/037-000	708
231-309/102-000	707
231-309/107-000	708
231-310/008-000	708
231-310/026-000	707
231-310/027-000	709
231-310/031-000	709
231-310/037-000	708
231-310/102-000	707
231-310/107-000	708
231-311/008-000	708
231-311/026-000	707
231-311/027-000	709
231-311/031-000	709
231-311/037-000	708
231-311/102-000	707
231-312/008-000	708
231-312/026-000	707
231-312/027-000	709
231-312/031-000	709
231-312/037-000	708
231-312/102-000	707
231-312/107-000	708
231-313/008-000	708
231-313/026-000	707
231-313/027-000	709
231-313/031-000	709
231-313/037-000	708
231-313/102-000	707
231-314/008-000	708
231-314/026-000	707
231-314/027-000	709
231-314/031-000	709

Item No.	Page
231 Series	
231-314/037-000	708
231-314/102-000	707
231-314/107-000	708
231-315/008-000	708
231-315/026-000	707
231-315/027-000	709
231-315/031-000	709
231-315/037-000	708
231-315/102-000	707
231-315/107-000	708
231-316/008-000	708
231-316/026-000	707
231-316/027-000	709
231-316/031-000	709
231-316/037-000	708
231-316/102-000	707
231-316/107-000	708
231-317/008-000	708
231-317/026-000	707
231-317/027-000	709
231-317/031-000	709
231-317/037-000	708
231-317/102-000	707
231-318/008-000	708
231-318/026-000	707
231-318/027-000	709
231-318/031-000	709
231-318/037-000	708
231-318/102-000	707
231-319/008-000	708
231-319/026-000	707
231-319/027-000	709
231-319/031-000	709
231-319/037-000	708
231-319/102-000	707
231-320/008-000	708
231-320/026-000	707
231-320/027-000	709
231-320/031-000	709
231-320/037-000	708
231-320/102-000	707
231-321/008-000	708
231-321/026-000	707
231-321/027-000	709
231-321/031-000	709
231-321/037-000	708
231-321/102-000	707
231-322/008-000	708
231-322/026-000	707
231-322/027-000	709
231-322/031-000	709
231-322/037-000	708
231-322/102-000	707
231-323/008-000	708
231-323/026-000	707
231-323/027-000	709
231-323/031-000	709
231-323/037-000	708
231-323/102-000	707
231-324/008-000	708
231-324/026-000	707
231-324/027-000	709
231-324/031-000	709
231-324/037-000	708
231-324/102-000	707
231-332/001-000	729
231-332/108-000	730
231-333/001-000	729
231-333/108-000	730
231-334/001-000	729
231-334/108-000	730
231-335/001-000	729
231-335/108-000	730
231-336/001-000	729
231-336/108-000	730
231-337/001-000	729
231-337/108-000	730
231-338/001-000	729
231-338/108-000	730
231-339/001-000	729
231-339/108-000	730

Item No.	Page
231 Series	
231-340/001-000	729
231-340/108-000	730
231-341/001-000	729
231-342/001-000	729
231-342/108-000	730
231-343/001-000	729
231-344/001-000	729
231-344/108-000	730
231-345/001-000	729
231-345/108-000	730
231-346/001-000	729
231-346/108-000	730
231-347/001-000	729
231-348/001-000	729
231-349/001-000	729
231-350/001-000	729
231-351/001-000	729
231-352/001-000	729
231-353/001-000	729
231-354/001-000	729
231-362/001-000	735
231-362/108-000	736
231-363/001-000	735
231-363/108-000	736
231-364/001-000	735
231-364/108-000	736
231-365/001-000	735
231-365/108-000	736
231-366/001-000	735
231-366/108-000	736
231-367/001-000	735
231-367/108-000	736
231-368/001-000	735
231-368/108-000	736
231-369/001-000	735
231-369/108-000	736
231-370/001-000	735
231-370/108-000	736
231-371/001-000	735
231-372/001-000	735
231-372/108-000	736
231-373/001-000	735
231-374/001-000	735
231-374/108-000	736
231-375/001-000	735
231-375/108-000	736
231-376/001-000	735
231-376/108-000	736
231-377/001-000	735
231-378/001-000	735
231-379/001-000	735
231-380/001-000	735
231-381/001-000	735
231-382/001-000	735
231-383/001-000	735
231-384/001-000	735
231-393	818
231-426	266
231-432/001-000	687
231-432/001-000/105-604	699
231-432/001-000/105-604/997-405	699
231-432/040-000	687
231-433/001-000	687
231-433/001-000/105-604	699
231-433/001-000/105-604/997-405	699
231-433/040-000	687
231-434/001-000	687
231-434/001-000/105-604	699
231-434/001-000/105-604/997-407	699
231-435/001-000	687
231-435/001-000/105-604	699
231-435/001-000/105-604/997-407	699
231-435/040-000	687
231-436/001-000	687
231-436/001-000/105-604	699
231-436/001-000/105-604/997-407	699
231-436/040-000	687
231-437/001-000	687
231-437/001-000/105-604	699
231-437/001-000/105-604/997-407	699
231-438/001-000	687

Item No.	Page
231 Series	
231-438/001-000/105-604	699
231-438/001-000/105-604/997-407	699
231-439/001-000	687
231-439/001-000/105-604	699
231-439/001-000/105-604/997-409	699
231-440/001-000	687
231-440/001-000/105-604	699
231-440/001-000/105-604/997-409	699
231-441/001-000	687
231-441/001-000/105-604	699
231-441/001-000/105-604/997-409	699
231-442/001-000	687
231-442/001-000/105-604	699
231-442/001-000/105-604/997-409	699
231-443/001-000	687
231-444/001-000	687
231-444/040-000	687
231-445/001-000	687
231-446/001-000	687
231-447/001-000	687
231-448/001-000	687
231-449/001-000	687
231-450/001-000	687
231-451/001-000	687
231-452/001-000	687
231-453/001-000	687
231-454/001-000	687
231-455	269
231-456	269
231-462/001-000	693
231-462/001-000/105-604	703
231-462/001-000/105-604/997-405	703
231-462/040-000	693
231-463/001-000	693
231-463/001-000/105-604	703
231-463/001-000/105-604/997-405	703
231-463/040-000	693
231-464/001-000	693
231-464/001-000/105-604	703
231-464/001-000/105-604/997-407	703
231-465/001-000	693
231-465/001-000/105-604	703
231-465/001-000/105-604/997-407	703
231-465/040-000	693
231-466/001-000	693
231-466/001-000/105-604	703
231-466/001-000/105-604/997-407	703
231-466/040-000	693
231-467/001-000	693
231-467/001-000/105-604	703
231-467/001-000/105-604/997-407	703
231-468/001-000	693
231-468/001-000/105-604	703
231-468/001-000/105-604/997-407	703
231-469/001-000	693
231-469/001-000/105-604	703
231-469/001-000/105-604/997-409	703
231-470/001-000	693
231-470/001-000/105-604	703
231-470/001-000/105-604/997-409	703
231-471/001-000	693
231-471/001-000/105-604	703
231-471/001-000/105-604/997-409	703
231-472/001-000	693
231-472/001-000/105-604	703
231-472/001-000/105-604/997-409	703
231-473/001-000	693
231-474/001-000	693
231-474/040-000	693
231-475/001-000	693
231-476/001-000	693
231-477/001-000	693
231-478/001-000	693
231-479/001-000	693
231-480/001-000	693
231-481/001-000	693
231-482/001-000	693
231-483/001-000	693
231-484/001-000	693
231-500	815
231-532/001-000	729

Item Number Index

Item No.	Page
231 Series	
231-532/108-000	729
231-533/001-000	729
231-533/108-000	729
231-534/001-000	729
231-534/108-000	729
231-535/001-000	729
231-535/108-000	729
231-536/001-000	729
231-536/108-000	729
231-537/001-000	729
231-537/108-000	729
231-538/001-000	729
231-538/108-000	729
231-539/001-000	729
231-539/108-000	729
231-540/001-000	729
231-540/108-000	729
231-541/001-000	729
231-542/001-000	729
231-542/108-000	729
231-543/001-000	729
231-544/001-000	729
231-544/108-000	729
231-545/001-000	729
231-545/108-000	729
231-546/001-000	729
231-546/108-000	729
231-547/001-000	729
231-548/001-000	729
231-549/001-000	729
231-550/001-000	729
231-551/001-000	729
231-552/001-000	729
231-553/001-000	729
231-554/001-000	729
231-562/001-000	735
231-562/108-000	735
231-563/001-000	735
231-563/108-000	735
231-564/001-000	735
231-564/108-000	735
231-565/001-000	735
231-565/108-000	735
231-566/001-000	735
231-566/108-000	735
231-567/001-000	735
231-567/108-000	735
231-568/001-000	735
231-568/108-000	735
231-569/001-000	735
231-569/108-000	735
231-570/001-000	735
231-570/108-000	735
231-571/001-000	735
231-572/001-000	735
231-572/108-000	735
231-573/001-000	735
231-574/001-000	735
231-574/108-000	735
231-575/001-000	735
231-575/108-000	735
231-576/001-000	735
231-576/108-000	735
231-577/001-000	735
231-578/001-000	735
231-579/001-000	735
231-580/001-000	735
231-581/001-000	735
231-582/001-000	735
231-583/001-000	735
231-584/001-000	735
231-602	677
231-602/017-000	1029
231-602/018-000	677
231-602/019-000	677
231-602/023-000	1029
231-602/114-000	678
231-603	677
231-603/017-000	1029
231-603/018-000	677
231-603/019-000	677

Item No.	Page
231 Series	
231-603/023-000	1029
231-603/114-000	678
231-604	677
231-604/017-000	1029
231-604/018-000	677
231-604/019-000	677
231-604/023-000	1029
231-604/114-000	678
231-605	677
231-605/017-000	1029
231-605/018-000	677
231-605/019-000	677
231-605/023-000	1029
231-605/114-000	678
231-606	677
231-606/017-000	1029
231-606/018-000	677
231-606/019-000	677
231-606/023-000	1029
231-606/114-000	678
231-607	677
231-607/017-000	1029
231-607/018-000	677
231-607/019-000	677
231-607/023-000	1029
231-607/114-000	678
231-608	677
231-608/017-000	1029
231-608/018-000	677
231-608/019-000	677
231-608/023-000	1029
231-608/114-000	678
231-609	677
231-609/017-000	1029
231-609/018-000	677
231-609/019-000	677
231-609/023-000	1029
231-609/114-000	678
231-610	677
231-610/017-000	1029
231-610/018-000	677
231-610/019-000	677
231-610/023-000	1029
231-610/114-000	678
231-611	677
231-611/017-000	1029
231-611/018-000	677
231-611/019-000	677
231-611/023-000	1029
231-611/114-000	678
231-612	677
231-612/017-000	1029
231-612/018-000	677
231-612/019-000	677
231-612/023-000	1029
231-612/114-000	678
231-613	677
231-613/018-000	677
231-613/019-000	677
231-613/114-000	678
231-614	677
231-614/018-000	677
231-614/019-000	677
231-614/114-000	678
231-615	677
231-615/018-000	677
231-615/019-000	677
231-615/114-000	678
231-616	677
231-616/018-000	677
231-616/019-000	677
231-616/114-000	678
231-617	677
231-617/018-000	677
231-617/019-000	677
231-617/114-000	678
231-618	677
231-618/018-000	677
231-618/019-000	677
231-618/114-000	678
231-619	677

Item No.	Page
231 Series	
231-619/018-000	677
231-619/019-000	677
231-619/114-000	678
231-620	677
231-620/018-000	677
231-620/019-000	677
231-620/114-000	678
231-621	677
231-621/018-000	677
231-621/019-000	677
231-621/114-000	678
231-622	677
231-622/018-000	677
231-622/019-000	677
231-622/114-000	678
231-623	677
231-623/018-000	677
231-623/019-000	677
231-623/114-000	678
231-624	677
231-624/018-000	677
231-624/019-000	677
231-624/114-000	678
231-632	721
231-632/017-000	1031
231-632/018-000	721
231-632/019-000	722
231-632/023-000	1031
231-632/109-000	721
231-632/114-000	722
231-632/129-000	723
231-633	721
231-633/017-000	1031
231-633/018-000	721
231-633/019-000	722
231-633/023-000	1031
231-633/109-000	721
231-633/114-000	722
231-633/129-000	723
231-634	721
231-634/017-000	1031
231-634/018-000	721
231-634/019-000	722
231-634/023-000	1031
231-634/109-000	721
231-634/114-000	722
231-634/129-000	723
231-635	721
231-635/017-000	1031
231-635/018-000	721
231-635/019-000	722
231-635/023-000	1031
231-635/109-000	721
231-635/114-000	722
231-635/129-000	723
231-636	721
231-636/017-000	1031
231-636/018-000	721
231-636/019-000	722
231-636/023-000	1031
231-636/109-000	721
231-636/114-000	722
231-636/129-000	723
231-637	721
231-637/017-000	1031
231-637/018-000	721
231-637/019-000	722
231-637/023-000	1031
231-637/109-000	721
231-637/114-000	722
231-637/129-000	723
231-638	721
231-638/017-000	1031
231-638/018-000	721
231-638/019-000	722
231-638/023-000	1031
231-638/109-000	721
231-638/114-000	722
231-638/129-000	723
231-639	721
231-639/017-000	1031

Item No.	Page
231 Series	
231-639/018-000	721
231-639/019-000	722
231-639/023-000	1031
231-639/109-000	721
231-639/114-000	722
231-639/129-000	723
231-640	721
231-640/017-000	1031
231-640/018-000	721
231-640/019-000	722
231-640/023-000	1031
231-640/109-000	721
231-640/114-000	722
231-640/129-000	723
231-641	721
231-641/017-000	1031
231-641/018-000	721
231-641/019-000	722
231-641/023-000	1031
231-641/114-000	722
231-642	721
231-642/017-000	1031
231-642/018-000	721
231-642/019-000	722
231-642/023-000	1031
231-642/109-000	721
231-642/114-000	722
231-642/129-000	723
231-643	721
231-643/018-000	721
231-643/019-000	722
231-643/114-000	722
231-644	721
231-644/018-000	721
231-644/019-000	722
231-644/109-000	721
231-644/114-000	722
231-644/129-000	723
231-645	721
231-645/018-000	721
231-645/019-000	722
231-645/109-000	721
231-645/114-000	722
231-645/129-000	723
231-646	721
231-646/018-000	721
231-646/019-000	722
231-646/109-000	721
231-646/114-000	722
231-646/129-000	723
231-647	721
231-647/018-000	721
231-647/019-000	722
231-647/114-000	722
231-648	721
231-648/018-000	721
231-648/019-000	722
231-648/114-000	722
231-649	721
231-649/018-000	721
231-649/019-000	722
231-649/114-000	722
231-650	721
231-650/018-000	721
231-650/019-000	722
231-650/114-000	722
231-651	721
231-651/018-000	721
231-651/019-000	722
231-651/114-000	722
231-652	721
231-652/018-000	721
231-652/019-000	722
231-652/114-000	722
231-653	721
231-653/018-000	721
231-653/019-000	722
231-653/114-000	722
231-654	721
231-654/018-000	721
231-654/019-000	722

Item Number Index

Item No.	Page
231 Series	
231-654/114-000	722
231-661	653
231-662	653
231-668	639
231-669	639
231-670	640
231-671	640
231-672	640
231-673	640
231-674	640
231-675	640
231-702/008-000	781
231-702/026-000	781
231-702/031-000	782
231-702/037-000	781
231-703/008-000	781
231-703/026-000	781
231-703/031-000	782
231-703/037-000	781
231-704/008-000	781
231-704/026-000	781
231-704/031-000	782
231-704/037-000	781
231-705/008-000	781
231-705/026-000	781
231-705/031-000	782
231-705/037-000	781
231-706/008-000	781
231-706/026-000	781
231-706/027-000	782
231-706/031-000	782
231-706/037-000	781
231-707/008-000	781
231-707/026-000	781
231-707/027-000	782
231-707/031-000	782
231-707/037-000	781
231-708/008-000	781
231-708/026-000	781
231-708/027-000	782
231-708/031-000	782
231-708/037-000	781
231-709/008-000	781
231-709/026-000	781
231-709/027-000	782
231-709/031-000	782
231-709/037-000	781
231-710/008-000	781
231-710/026-000	781
231-710/027-000	782
231-710/031-000	782
231-710/037-000	781
231-711/008-000	781
231-711/026-000	781
231-711/027-000	782
231-711/031-000	782
231-711/037-000	781
231-712/008-000	781
231-712/026-000	781
231-712/027-000	782
231-712/031-000	782
231-712/037-000	781
231-732/001-000	801
231-733/001-000	801
231-734/001-000	801
231-735/001-000	801
231-736/001-000	801
231-737/001-000	801
231-738/001-000	801
231-739/001-000	801
231-740/001-000	801
231-741/001-000	801
231-742/001-000	801
231-762/001-000	803
231-763/001-000	803
231-764/001-000	803
231-765/001-000	803
231-766/001-000	803
231-767/001-000	803
231-768/001-000	803
231-769/001-000	803

Item No.	Page
231 Series	
231-770/001-000	803
231-771/001-000	803
231-772/001-000	803
231-832/001-000	765
231-832/001-000/105-604	773
231-832/001-000/105-604/997-405	773
231-833/001-000	765
231-833/001-000/105-604	773
231-833/001-000/105-604/997-407	773
231-834/001-000	765
231-834/001-000/105-604	773
231-834/001-000/105-604/997-407	773
231-835/001-000	765
231-835/001-000/105-604	773
231-835/001-000/105-604/997-407	773
231-836/001-000	765
231-836/001-000/105-604	773
231-837/001-000	765
231-837/001-000/105-604	773
231-838/001-000	765
231-838/001-000/105-604	773
231-839/001-000	765
231-839/001-000/105-604	773
231-840/001-000	765
231-840/001-000/105-604	773
231-840/040-000	765
231-841/001-000	765
231-841/001-000/105-604	773
231-842/001-000	765
231-842/001-000/105-604	773
231-843/001-000	765
231-846/001-000	765
231-862/001-000	769
231-862/001-000/105-604	777
231-862/001-000/105-604/997-405	777
231-863/001-000	769
231-863/001-000/105-604	777
231-863/001-000/105-604/997-407	777
231-864/001-000	769
231-864/001-000/105-604	777
231-864/001-000/105-604/997-407	777
231-865/001-000	769
231-865/001-000/105-604	777
231-865/001-000/105-604/997-407	777
231-866/001-000	769
231-866/001-000/105-604	777
231-867/001-000	769
231-867/001-000/105-604	777
231-868/001-000	769
231-868/001-000/105-604	777
231-869/001-000	769
231-869/001-000/105-604	777
231-870/001-000	769
231-870/001-000/105-604	777
231-870/040-000	769
231-871/001-000	769
231-871/001-000/105-604	777
231-872/001-000	769
231-872/001-000/105-604	777
231-873/001-000	769
231-876/001-000	769
231-902	650
231-903	650
231-905	650
231-907	650
231-910	650
231-932/001-000	801
231-933/001-000	801
231-934/001-000	801
231-935/001-000	801
231-936/001-000	801
231-937/001-000	801
231-938/001-000	801
231-939/001-000	801
231-940/001-000	801
231-941/001-000	801
231-942/001-000	801
231-962/001-000	803
231-963/001-000	803
231-964/001-000	803
231-965/001-000	803

Item No.	Page
231 Series	
231-966/001-000	803
231-967/001-000	803
231-968/001-000	803
231-969/001-000	803
231-970/001-000	803
231-971/001-000	803
231-972/001-000	803
231-2102/026-000	669
231-2102/037-000	669
231-2103/026-000	669
231-2103/037-000	669
231-2104/026-000	669
231-2104/037-000	669
231-2105/026-000	669
231-2105/037-000	669
231-2106/026-000	669
231-2106/037-000	669
231-2107/026-000	669
231-2107/037-000	669
231-2108/026-000	669
231-2108/037-000	669
231-2109/026-000	669
231-2109/037-000	669
231-2110/026-000	669
231-2110/037-000	669
231-2111/026-000	669
231-2111/037-000	669
231-2112/026-000	669
231-2112/037-000	669
231-2113/026-000	669
231-2113/037-000	669
231-2114/026-000	669
231-2114/037-000	669
231-2115/026-000	669
231-2115/037-000	669
231-2116/026-000	669
231-2116/037-000	669
231-2202/026-000	749
231-2202/037-000	749
231-2203/026-000	749
231-2203/037-000	749
231-2204/026-000	749
231-2204/037-000	749
231-2205/026-000	749
231-2205/037-000	749
231-2206/026-000	749
231-2206/037-000	749
231-2207/026-000	749
231-2207/037-000	749
231-2208/026-000	749
231-2208/037-000	749
231-2209/026-000	749
231-2209/037-000	749
231-2210/026-000	749
231-2210/037-000	749
231-2211/026-000	749
231-2211/037-000	749
231-2212/026-000	749
231-2212/037-000	749
231-2302/026-000	713
231-2302/037-000	713
231-2302/107-000	713
231-2303/026-000	713
231-2303/037-000	713
231-2303/107-000	713
231-2304/026-000	713
231-2304/037-000	713
231-2304/107-000	713
231-2305/026-000	713
231-2305/037-000	713
231-2305/107-000	713
231-2306/026-000	713
231-2306/037-000	713
231-2306/107-000	713
231-2307/026-000	713
231-2307/037-000	713
231-2307/107-000	713
231-2308/026-000	713
231-2308/037-000	713
231-2308/107-000	713
231-2309/026-000	713

Item No.	Page
231 Series	
231-2309/037-000	713
231-2309/107-000	713
231-2310/026-000	713
231-2310/037-000	713
231-2310/107-000	713
231-2311/026-000	713
231-2311/037-000	713
231-2312/026-000	713
231-2312/037-000	713
231-2312/107-000	713
231-2313/026-000	713
231-2313/037-000	713
231-2314/026-000	713
231-2314/037-000	713
231-2314/107-000	713
231-2315/026-000	713
231-2315/037-000	713
231-2315/107-000	713
231-2316/026-000	713
231-2316/037-000	713
231-2316/107-000	713
231-2702/026-000	787
231-2702/037-000	787
231-2703/026-000	787
231-2703/037-000	787
231-2704/026-000	787
231-2704/037-000	787
231-2705/026-000	787
231-2705/037-000	787
231-2706/026-000	787
231-2706/037-000	787
231-2707/026-000	787
231-2707/037-000	787
231-2708/026-000	787
231-2708/037-000	787
231-2709/026-000	787
231-2709/037-000	787
231-2710/026-000	787
231-2710/037-000	787
231-2711/026-000	787
231-2711/037-000	787
231-2712/026-000	787
231-2712/037-000	787
232 Series	
232-102/026-000	663
232-103/026-000	663
232-104/026-000	663
232-105/026-000	663
232-106/026-000	663
232-107/026-000	663
232-108/026-000	663
232-109/026-000	663
232-110/026-000	663
232-111/026-000	663
232-112/026-000	663
232-113/026-000	663
232-114/026-000	663
232-115/026-000	663
232-116/026-000	663
232-117/026-000	663
232-118/026-000	663
232-119/026-000	663
232-120/026-000	663
232-121/026-000	663
232-122/026-000	663
232-123/026-000	663
232-124/026-000	663
232-132	683
232-132/031-000	684
232-132/039-000	684
232-132/047-000	685
232-133	683
232-133/031-000	684
232-133/039-000	684
232-133/047-000	685
232-134	683
232-134/031-000	684
232-134/039-000	684
232-134/047-000	685

Item Number Index

Item No.	Page
232 Series	
232-135	683
232-135/031-000	684
232-135/039-000	684
232-135/047-000	685
232-136	683
232-136/031-000	684
232-136/039-000	684
232-136/047-000	685
232-137	683
232-137/031-000	684
232-137/039-000	684
232-137/047-000	685
232-138	683
232-138/031-000	684
232-138/039-000	684
232-138/047-000	685
232-139	683
232-139/031-000	684
232-139/039-000	684
232-139/047-000	685
232-140	683
232-140/031-000	684
232-140/039-000	684
232-140/047-000	685
232-141	683
232-141/031-000	684
232-141/039-000	684
232-141/047-000	685
232-142	683
232-142/031-000	684
232-142/039-000	684
232-142/047-000	685
232-143	683
232-143/031-000	684
232-143/039-000	684
232-143/047-000	685
232-144	683
232-144/031-000	684
232-144/039-000	684
232-144/047-000	685
232-145	683
232-145/031-000	684
232-145/039-000	684
232-145/047-000	685
232-146	683
232-146/031-000	684
232-146/039-000	684
232-146/047-000	685
232-147	683
232-147/031-000	684
232-147/039-000	684
232-147/047-000	685
232-148	683
232-148/031-000	684
232-148/039-000	684
232-148/047-000	685
232-149	683
232-149/031-000	684
232-149/039-000	684
232-149/047-000	685
232-150	683
232-150/031-000	684
232-150/039-000	684
232-150/047-000	685
232-151	683
232-151/031-000	684
232-151/039-000	684
232-151/047-000	685
232-152	683
232-152/031-000	684
232-152/039-000	684
232-152/047-000	685
232-153	683
232-153/031-000	684
232-153/039-000	684
232-153/047-000	685
232-154	683
232-154/031-000	684
232-154/047-000	685
232-162	725
232-162/031-000	726

Item No.	Page
232 Series	
232-162/039-000	726
232-162/047-000	727
232-163	725
232-163/031-000	726
232-163/039-000	726
232-163/047-000	727
232-164	725
232-164/031-000	726
232-164/039-000	726
232-164/047-000	727
232-165	725
232-165/031-000	726
232-165/039-000	726
232-165/047-000	727
232-166	725
232-166/031-000	726
232-166/039-000	726
232-166/047-000	727
232-167	725
232-167/031-000	726
232-167/039-000	726
232-167/047-000	727
232-168	725
232-168/031-000	726
232-168/039-000	726
232-168/047-000	727
232-169	725
232-169/031-000	726
232-169/039-000	726
232-169/047-000	727
232-170	725
232-170/031-000	726
232-170/039-000	726
232-170/047-000	727
232-171	725
232-171/031-000	726
232-171/039-000	726
232-171/047-000	727
232-172	725
232-172/031-000	726
232-172/039-000	726
232-172/047-000	727
232-173	725
232-173/031-000	726
232-173/039-000	726
232-173/047-000	727
232-174	725
232-174/031-000	726
232-174/039-000	726
232-174/047-000	727
232-175	725
232-175/031-000	726
232-175/039-000	726
232-175/047-000	727
232-176	725
232-176/031-000	726
232-176/039-000	726
232-176/047-000	727
232-177	725
232-177/031-000	726
232-177/039-000	726
232-177/047-000	727
232-178	725
232-178/031-000	726
232-178/039-000	726
232-178/047-000	727
232-179	725
232-179/031-000	726
232-179/039-000	726
232-179/047-000	727
232-180	725
232-180/031-000	726
232-180/039-000	726
232-180/047-000	727
232-181	725
232-181/031-000	726
232-181/039-000	726
232-181/047-000	727
232-182	725
232-182/031-000	726
232-182/039-000	726

Item No.	Page
232 Series	
232-182/047-000	727
232-183	725
232-183/031-000	726
232-183/039-000	726
232-183/047-000	727
232-184	725
232-184/031-000	726
232-184/039-000	726
232-184/047-000	727
232-202/026-000	663
232-203/026-000	663
232-204/026-000	663
232-205/026-000	663
232-206/026-000	663
232-207/026-000	663
232-208/026-000	663
232-209/026-000	663
232-210/026-000	663
232-211/026-000	663
232-212/026-000	663
232-213/026-000	663
232-214/026-000	663
232-215/026-000	663
232-216/026-000	663
232-217/026-000	663
232-218/026-000	663
232-219/026-000	663
232-220/026-000	663
232-221/026-000	663
232-222/026-000	663
232-223/026-000	663
232-224/026-000	663
232-232	683
232-232/031-000	684
232-232/039-000	683
232-232/047-000	685
232-233	683
232-233/031-000	684
232-233/039-000	683
232-233/047-000	685
232-234	683
232-234/031-000	684
232-234/039-000	683
232-234/047-000	685
232-235	683
232-235/031-000	684
232-235/039-000	683
232-235/047-000	685
232-236	683
232-236/031-000	684
232-236/039-000	683
232-236/047-000	685
232-237	683
232-237/031-000	684
232-237/039-000	683
232-237/047-000	685
232-238	683
232-238/031-000	684
232-238/039-000	683
232-238/047-000	685
232-239	683
232-239/031-000	684
232-239/039-000	683
232-239/047-000	685
232-240	683
232-240/031-000	684
232-240/039-000	683
232-240/047-000	685
232-241	683
232-241/031-000	684
232-241/039-000	683
232-241/047-000	685
232-242	683
232-242/031-000	684
232-242/039-000	683
232-242/047-000	685
232-243	683
232-243/031-000	684
232-243/039-000	683
232-243/047-000	685
232-244	683

Item No.	Page
232 Series	
232-244/031-000	684
232-244/039-000	683
232-244/047-000	685
232-245	683
232-245/031-000	684
232-245/039-000	683
232-245/047-000	685
232-246	683
232-246/031-000	684
232-246/039-000	683
232-246/047-000	685
232-247	683
232-247/031-000	684
232-247/039-000	683
232-247/047-000	685
232-248	683
232-248/031-000	684
232-248/039-000	683
232-248/047-000	685
232-249	683
232-249/031-000	684
232-249/039-000	683
232-249/047-000	685
232-250	683
232-250/031-000	684
232-250/039-000	683
232-250/047-000	685
232-251	683
232-251/031-000	684
232-251/039-000	683
232-251/047-000	685
232-252	683
232-252/031-000	684
232-252/039-000	683
232-252/047-000	685
232-253	683
232-253/031-000	684
232-253/039-000	683
232-253/047-000	685
232-254	683
232-254/031-000	684
232-254/039-000	683
232-254/047-000	685
232-262	725
232-262/031-000	726
232-262/039-000	725
232-262/047-000	727
232-263	725
232-263/031-000	726
232-263/039-000	725
232-263/047-000	727
232-264	725
232-264/031-000	726
232-264/039-000	725
232-264/047-000	727
232-265	725
232-265/031-000	726
232-265/039-000	725
232-265/047-000	727
232-266	725
232-266/031-000	726
232-266/039-000	725
232-266/047-000	727
232-267	725
232-267/031-000	726
232-267/039-000	725
232-267/047-000	727
232-268	725
232-268/031-000	726
232-268/039-000	725
232-268/047-000	727
232-269	725
232-269/031-000	726
232-269/039-000	725
232-269/047-000	727
232-270	725
232-270/031-000	726
232-270/039-000	725
232-270/047-000	727
232-271	725
232-271/031-000	726

Item Number Index

Item No.	Page
232 Series	
232-271/039-000	725
232-271/047-000	727
232-272	725
232-272/031-000	726
232-272/039-000	725
232-272/047-000	727
232-273	725
232-273/031-000	726
232-273/039-000	725
232-273/047-000	727
232-274	725
232-274/031-000	726
232-274/039-000	725
232-274/047-000	727
232-275	725
232-275/031-000	726
232-275/039-000	725
232-275/047-000	727
232-276	725
232-276/031-000	726
232-276/039-000	725
232-276/047-000	727
232-277	725
232-277/031-000	726
232-277/039-000	725
232-277/047-000	727
232-278	725
232-278/031-000	726
232-278/039-000	725
232-278/047-000	727
232-279	725
232-279/031-000	726
232-279/039-000	725
232-279/047-000	727
232-280	725
232-280/031-000	726
232-280/039-000	725
232-280/047-000	727
232-281	725
232-281/031-000	726
232-281/039-000	725
232-281/047-000	727
232-282	725
232-282/031-000	726
232-282/039-000	725
232-282/047-000	727
232-283	725
232-283/031-000	726
232-283/039-000	725
232-283/047-000	727
232-284	725
232-284/031-000	726
232-284/039-000	725
232-284/047-000	727
232-302/026-000	711
232-303/026-000	711
232-304/026-000	711
232-305/026-000	711
232-306/026-000	711
232-307/026-000	711
232-308/026-000	711
232-309/026-000	711
232-310/026-000	711
232-311/026-000	711
232-312/026-000	711
232-313/026-000	711
232-314/026-000	711
232-315/026-000	711
232-316/026-000	711
232-317/026-000	711
232-318/026-000	711
232-319/026-000	711
232-320/026-000	711
232-321/026-000	711
232-322/026-000	711
232-323/026-000	711
232-324/026-000	711
232-332	691
232-333	691
232-334	691
232-335	691

Item No.	Page
232 Series	
232-336	691
232-337	691
232-338	691
232-340	691
232-342	691
232-346	691
232-362	733
232-363	733
232-364	733
232-366	733
232-368	733
232-370	733
232-372	733
232-376	733
232-402/026-000	711
232-403/026-000	711
232-404/026-000	711
232-405/026-000	711
232-406/026-000	711
232-407/026-000	711
232-408/026-000	711
232-409/026-000	711
232-410/026-000	711
232-411/026-000	711
232-412/026-000	711
232-413/026-000	711
232-414/026-000	711
232-415/026-000	711
232-416/026-000	711
232-417/026-000	711
232-418/026-000	711
232-419/026-000	711
232-420/026-000	711
232-421/026-000	711
232-422/026-000	711
232-423/026-000	711
232-424/026-000	711
232-602	649
232-603	649
232-604	649
232-605	649
232-606	649
232-607	649
232-608	649
232-609	649
232-610	649
232-612	649
232-632	828
232-633	828
232-634	828
232-635	828
232-636	828
232-637	828
232-638	828
232-639	828
232-640	828
232-642	828
232-646	828
232-662	649
232-663	649
232-664	649
232-665	649
232-667	649
232-670	649
232-682	829
232-683	829
232-684	829
232-685	829
232-687	829
232-732	761
232-732/031-000	762
232-732/039-000	762
232-732/047-000	763
232-733	761
232-733/031-000	762
232-733/039-000	762
232-733/047-000	763
232-734	761
232-734/031-000	762
232-734/039-000	762
232-734/047-000	763

Item No.	Page
232 Series	
232-735	761
232-735/031-000	762
232-735/039-000	762
232-735/047-000	763
232-736	761
232-736/031-000	762
232-736/039-000	762
232-736/047-000	763
232-737	761
232-737/031-000	762
232-737/039-000	762
232-737/047-000	763
232-738	761
232-738/031-000	762
232-738/039-000	762
232-738/047-000	763
232-739	761
232-739/031-000	762
232-739/039-000	762
232-739/047-000	763
232-740	761
232-740/031-000	762
232-740/039-000	762
232-740/047-000	763
232-741	761
232-741/031-000	762
232-741/039-000	762
232-741/047-000	763
232-742	761
232-742/031-000	762
232-742/039-000	762
232-742/047-000	763
232-743	761
232-743/031-000	762
232-743/039-000	762
232-743/047-000	763
232-746	761
232-746/031-000	762
232-746/039-000	762
232-746/047-000	763
232-762	797
232-762/031-000	798
232-762/039-000	798
232-762/047-000	799
232-763	797
232-763/031-000	798
232-763/039-000	798
232-763/047-000	799
232-764	797
232-764/031-000	798
232-764/039-000	798
232-764/047-000	799
232-765	797
232-765/031-000	798
232-765/039-000	798
232-765/047-000	799
232-766	797
232-766/031-000	798
232-766/039-000	798
232-766/047-000	799
232-767	797
232-767/031-000	798
232-767/039-000	798
232-767/047-000	799
232-768	797
232-768/031-000	798
232-768/039-000	798
232-768/047-000	799
232-769	797
232-769/031-000	798
232-769/039-000	798
232-769/047-000	799
232-770	797
232-770/031-000	798
232-770/039-000	798
232-770/047-000	799
232-771	797
232-771/031-000	798
232-771/039-000	798
232-771/047-000	799
232-772	797

Item No.	Page
232 Series	
232-772/031-000	798
232-772/039-000	798
232-772/047-000	799
232-832	761
232-832/031-000	762
232-832/039-000	761
232-832/047-000	763
232-833	761
232-833/031-000	762
232-833/039-000	761
232-833/047-000	763
232-834	761
232-834/031-000	762
232-834/039-000	761
232-834/047-000	763
232-835	761
232-835/031-000	762
232-835/039-000	761
232-835/047-000	763
232-836	761
232-836/031-000	762
232-836/039-000	761
232-836/047-000	763
232-837	761
232-837/031-000	762
232-837/039-000	761
232-837/047-000	763
232-838	761
232-838/031-000	762
232-838/039-000	761
232-838/047-000	763
232-839	761
232-839/031-000	762
232-839/039-000	761
232-839/047-000	763
232-840	761
232-840/031-000	762
232-840/039-000	761
232-840/047-000	763
232-841	761
232-841/031-000	762
232-841/039-000	761
232-841/047-000	763
232-842	761
232-842/031-000	762
232-842/039-000	761
232-842/047-000	763
232-843	761
232-843/031-000	762
232-843/039-000	761
232-843/047-000	763
232-846	761
232-846/031-000	762
232-846/039-000	761
232-846/047-000	763
232-862	797
232-862/031-000	798
232-862/039-000	797
232-862/047-000	799
232-863	797
232-863/031-000	798
232-863/039-000	797
232-863/047-000	799
232-864	797
232-864/031-000	798
232-864/039-000	797
232-864/047-000	799
232-865	797
232-865/031-000	798
232-865/039-000	797
232-865/047-000	799
232-866	797
232-866/031-000	798
232-866/039-000	797
232-866/047-000	799
232-867	797
232-867/031-000	798
232-867/039-000	797
232-867/047-000	799
232-868	797
232-868/031-000	798

Item Number Index

Item No.	Page
232 Series	
232-868/039-000	797
232-868/047-000	799
232-869	797
232-869/031-000	798
232-869/039-000	797
232-869/047-000	799
232-870	797
232-870/031-000	798
232-870/039-000	797
232-870/047-000	799
232-871	797
232-871/031-000	798
232-871/039-000	797
232-871/047-000	799
232-872	797
232-872/031-000	798
232-872/039-000	797
232-872/047-000	799
233 Series	
233-102	21
233-103	21
233-104	21
233-105	21
233-106	21
233-107	21
233-108	21
233-109	21
233-110	21
233-112	21
233-202	101
233-203	101
233-204	101
233-205	101
233-206	101
233-207	101
233-208	101
233-209	101
233-210	101
233-212	101
233-331	1073
233-332	1073
233-335	1073
233-402	21
233-403	21
233-404	21
233-405	21
233-406	21
233-407	21
233-408	21
233-409	21
233-410	21
233-412	21
233-502	101
233-503	101
233-504	101
233-505	101
233-506	101
233-507	101
233-508	101
233-509	101
233-510	101
233-512	101
234 Series	
234-202	103
234-203	103
234-204	103
234-205	103
234-206	103
234-207	103
234-208	103
234-209	103
234-210	103
234-212	103
234-502	103
234-503	103
234-504	103
234-505	103
234-506	103

Item No.	Page
234 Series	
234-507	103
234-508	103
234-509	103
234-510	103
234-512	103
235 Series	
235-100	181
235-101	185
235-101/330-000	229
235-102	187
235-102/330-000	231
235-103	187
235-103/330-000	231
235-104	187
235-104/330-000	231
235-105	187
235-105/330-000	231
235-106	187
235-106/330-000	231
235-107	187
235-107/330-000	231
235-108	187
235-108/330-000	231
235-109	187
235-109/330-000	231
235-110	187
235-110/330-000	231
235-112	187
235-200	181
235-300	181
235-400	181
235-401	225
235-401/331-000	181
235-402	227
235-402/331-000	183
235-403	227
235-403/331-000	183
235-404	227
235-404/331-000	183
235-405	227
235-405/331-000	183
235-406	227
235-406/331-000	183
235-407	227
235-407/331-000	183
235-408	227
235-408/331-000	183
235-409	227
235-409/331-000	183
235-410	227
235-410/331-000	183
235-412	227
235-412/331-000	183
235-500	181
235-501	225
235-501/331-000	181
235-550	181
235-600	181
235-650	181
235-700	181
235-701	181
235-740	225
235-740/331-000	181
235-741/331-000	181
235-742	225
235-742/331-000	181
235-743	225
235-743/331-000	181
235-744	225
235-744/331-000	181
235-745/331-000	181
235-746	225
235-746/331-000	181
235-747	225
235-747/331-000	181
235-748/331-000	181
235-749/331-000	181
235-752	225
235-752/331-000	181

Item No.	Page
235 Series	
235-753	225
235-753/331-000	181
235-754	225
235-754/331-000	181
235-756	225
235-756/331-000	181
235-757	225
235-757/331-000	181
235-758/331-000	181
235-762	225
235-762/331-000	181
235-764/331-000	181
235-766	225
235-766/331-000	181
235-767/331-000	181
235-770	185
235-771	185
235-772	185
235-774	185
235-775	185
235-776	185
235-777	185
235-778	185
235-800	181
235-801	225
235-801/331-000	181
235-850	181
236 Series	
236-100	23
236-101	23
236-102	29
236-103	29
236-104	29
236-106	29
236-108	29
236-112	29
236-116	29
236-124	29
236-136	29
236-148	29
236-200	23
236-201	25
236-202	31
236-203	31
236-204	31
236-206	31
236-208	31
236-212	31
236-216	31
236-224	31
236-300	23
236-301	27
236-302	33
236-303	33
236-304	33
236-306	33
236-308	33
236-312	33
236-316	33
236-324	33
236-332	1073
236-335	1073
236-400	23
236-401	23
236-402	29
236-402/334-604	343
236-402/334-604/997-405	343
236-403	29
236-403/334-604	343
236-403/334-604/997-405	343
236-404	29
236-404/334-604	343
236-404/334-604/997-406	343
236-405/334-604	343
236-405/334-604/997-406	343
236-406	29
236-406/334-604	343
236-406/334-604/997-406	343
236-408	29

Item No.	Page
236 Series	
236-412	29
236-416	29
236-424	29
236-436	29
236-448	29
236-500	23
236-501	25
236-502	31
236-503	31
236-504	31
236-506	31
236-508	31
236-512	31
236-516	31
236-524	31
236-600	23
236-601	27
236-602	33
236-603	33
236-604	33
236-606	33
236-608	33
236-612	33
236-616	33
236-624	33
236-700	23
236-710	23
236-711	23
236-712	23
236-713	23
236-714	23
236-715	23
236-716	23
236-717	23
236-722	25
236-723	25
236-724	25
236-725	25
236-726	25
236-727	25
236-732	27
236-733	27
236-734	27
236-735	27
236-736	27
236-737	27
236-740	23
236-741	23
236-742	23
236-743	23
236-744	23
236-745	23
236-746	23
236-747	23
236-752	25
236-753	25
236-754	25
236-755	25
236-756	25
236-757	25
236-762	27
236-763	27
236-764	27
236-765	27
236-766	27
236-767	27
236-800	23
236-850	23
236-851	23
236-852	25
236-853	27
236-854	23
236-855	25
236-856	27
236-881	23
236-882	25
236-884	23
236-885	25
236-891	23
236-894	23
236-1731	23

Item Number Index

Item No.	Page
243 Series	
243-131	997
243-211	1049
243-212	1049
243-721	1003
243-722	1003
243-723	1003
243-724	1003
243-725	1003
243-726	1003
243-742	1003
243-742/000-006	1003
243-742/000-012	1003
243-743	1003
243-743/000-012	1003
243-744	1003
243-744/000-006	1003
243-744/000-007	1003
243-744/000-012	1003
243-745	1003
243-745/000-006	1003
243-745/000-012	1003
243-746	1003
243-746/000-006	1003
243-747	1003
243-748	1003
248 Series	
248-472	1065
248-474	1065
248-501	1064
248-501/000-002	1064
248-501/000-005	1064
248-501/000-006	1064
248-501/000-007	1064
248-501/000-012	1064
248-501/000-017	1064
248-501/000-023	1064
248-501/000-024	1064
248-502	1065
248-503	1065
248-504	1065
248-505	1065
248-506	1065
248-507	1065
248-508	1065
248-509	1065
248-510	1065
248-511	1065
248-512	1065
248-513	1065
248-514	1065
248-515	1065
248-516	1065
248-517	1065
248-565	1065
248-566	1065
248-569	1065
248-570	1065
248-571	1065
248-572	1065
248-573	1065
249 Series	
249-110	261
249-111	262
249-112	261
249-113	262
249-114	261
249-115	262
249-130	1085
250 Series	
250-102	171
250-103	171
250-104	171
250-105	171
250-106	171
250-107	171
250-108	171

Item No.	Page
250 Series	
250-109	171
250-110	171
250-111	171
250-112	171
250-113	171
250-114	171
250-115	171
250-116	171
250-117	171
250-118	171
250-119	171
250-120	171
250-121	171
250-122	171
250-123	171
250-124	171
250-202	173
250-202/353-604	339
250-202/353-604/997-404	339
250-203	173
250-203/353-604	339
250-203/353-604/997-404	339
250-204	173
250-204/353-604	339
250-204/353-604/997-405	339
250-205	173
250-205/353-604	339
250-205/353-604/997-405	339
250-206	173
250-206/353-604	339
250-206/353-604/997-406	339
250-207	173
250-207/353-604	339
250-207/353-604/997-406	339
250-208	173
250-208/353-604	339
250-208/353-604/997-406	339
250-209	173
250-210	173
250-211	173
250-212	173
250-213	173
250-214	173
250-215	173
250-216	173
250-217	173
250-218	173
250-219	173
250-220	173
250-221	173
250-222	173
250-223	173
250-224	173
250-302	167
250-303	167
250-304	167
250-305	167
250-306	167
250-307	167
250-308	167
250-309	167
250-310	167
250-311	167
250-312	167
250-313	167
250-314	167
250-315	167
250-316	167
250-317	167
250-318	167
250-319	167
250-320	167
250-321	167
250-322	167
250-323	167
250-324	167
250-402	169
250-402/353-604	337
250-403	169
250-403/353-604	337
250-404	169

Item No.	Page
250 Series	
250-404/353-604	337
250-405	169
250-405/353-604	337
250-406	169
250-406/353-604	337
250-407	169
250-407/353-604	337
250-408	169
250-408/353-604	337
250-409	169
250-410	169
250-410/353-604	337
250-411	169
250-412	169
250-413	169
250-414	169
250-415	169
250-416	169
250-417	169
250-418	169
250-419	169
250-420	169
250-421	169
250-422	169
250-423	169
250-424	169
250-502	175
250-503	175
250-504	175
250-505	175
250-506	175
250-507	175
250-508	175
250-509	175
250-510	175
250-511	175
250-512	175
250-513	175
250-514	175
250-515	175
250-516	175
250-602	175
250-603	175
250-604	175
250-605	175
250-606	175
250-607	175
250-608	175
250-609	175
250-610	175
250-611	175
250-612	175
250-702	177
250-703	177
250-704	177
250-706	177
250-708	177
250-710	177
250-712	177
250-716	177
250-1402	169
250-1403	169
250-1404	169
250-1405	169
250-1406	169
250-1407	169
250-1408	169
250-1409	169
250-1410	169
250-1411	169
250-1412	169
250-1413	169
250-1414	169
250-1415	169
250-1416	169
250-1417	169
250-1418	169
250-1419	169
250-1420	169
250-1421	169
250-1422	169

Item No.	Page
250 Series	
250-1423	169
250-1424	169
252 Series	
252-102	997
252-103	997
252-104	997
252-105	997
252-106	997
252-107	997
252-108	997
252-109	997
252-110	997
252-152	998
252-153	998
252-154	998
252-155	998
252-156	998
252-157	998
252-158	998
252-159	998
252-160	998
252-302	997
252-303	997
252-304	997
252-305	997
252-306	997
252-307	997
252-308	997
252-309	997
252-310	997
252-902	998
252-903	998
252-904	998
252-905	998
252-906	998
252-907	998
252-908	998
252-909	998
252-910	998
252-954	998
253 Series	
253-102	243
253-103	243
253-104	243
253-105	243
253-106	243
253-107	243
253-108	243
253-109	243
253-110	243
253-111	243
253-112	243
253-113	243
253-114	243
253-115	243
253-116	243
254 Series	
254-100	235
254-200	235
254-300	235
254-400	235
254-451	235
254-452	237
254-453	237
254-454	237
254-455	237
254-456	237
254-457	237
254-458	237
254-459	237
254-460	237
254-462	237
254-466	237
254-474	237
254-551	235
254-552	237

Item Number Index

Item No.	Page
254 Series	
254-553	237
254-554	237
254-555	237
254-556	237
254-557	237
254-558	237
254-559	237
254-560	237
254-562	237
254-600	235
254-651	235
254-652	237
254-653	237
254-654	237
254-655	237
254-656	237
254-657	237
254-658	237
254-659	237
254-660	237
254-662	237
254-700	235
254-842	235
254-843	235
254-844	235
254-846	235
254-847	235
254-848	235
254-852	235
254-853	235
254-854	235
254-856	235
254-857	235
254-862	235
254-863	235
254-864	235
254-866	235
254-867	235
255 Series	
255-100	107
255-200	107
255-300	107
255-400	107
255-401	107
255-402	109
255-402/333-000	111
255-403	109
255-403/333-000	111
255-404	109
255-404/333-000	111
255-405	109
255-405/333-000	111
255-406	109
255-406/333-000	111
255-407	109
255-407/333-000	111
255-408	109
255-408/333-000	111
255-409	109
255-409/333-000	111
255-410	109
255-410/333-000	111
255-412	109
255-412/333-000	111
255-500	107
255-501	107
255-502	109
255-502/333-000	111
255-503	109
255-503/333-000	111
255-504	109
255-504/333-000	111
255-505	109
255-505/333-000	111
255-506	109
255-506/333-000	111
255-507	109
255-507/333-000	111
255-508	109
255-508/333-000	111

Item No.	Page
255 Series	
255-509	109
255-509/333-000	111
255-510	109
255-510/333-000	111
255-512	109
255-512/333-000	111
255-600	107
255-601	107
255-602	109
255-602/333-000	111
255-603	109
255-603/333-000	111
255-604	109
255-604/333-000	111
255-605	109
255-605/333-000	111
255-606	109
255-606/333-000	111
255-607	109
255-607/333-000	111
255-608	109
255-608/333-000	111
255-609	109
255-609/333-000	111
255-610	109
255-610/333-000	111
255-612	109
255-612/333-000	111
255-700	107
255-740	107
255-741	107
255-742	107
255-743	107
255-744	107
255-746	107
255-747	107
255-748	107
255-750	107
255-751	107
255-752	107
255-753	107
255-754	107
255-756	107
255-757	107
255-758	107
255-760	107
255-761	107
255-762	107
255-763	107
255-764	107
255-766	107
255-767	107
255-768	107
255-800	107
255-801	107
255-811	107
255-821	107
256 Series	
256-100	113
256-200	113
256-300	113
256-400	113
256-401	113
256-402	115
256-402/333-000	121
256-402/334-000	119
256-403	115
256-403/333-000	121
256-403/334-000	119
256-404	115
256-404/333-000	121
256-404/334-000	119
256-405	115
256-405/333-000	121
256-405/334-000	119
256-406	115
256-406/333-000	121
256-406/334-000	119
256-407	115

Item No.	Page
256 Series	
256-407/333-000	121
256-407/334-000	119
256-408	115
256-408/333-000	121
256-408/334-000	119
256-409	115
256-409/333-000	121
256-409/334-000	119
256-410	115
256-410/333-000	121
256-410/334-000	119
256-412	115
256-412/333-000	121
256-412/334-000	119
256-461	117
256-500	113
256-501	113
256-502	115
256-502/333-000	121
256-502/334-000	119
256-503	115
256-503/333-000	121
256-503/334-000	119
256-504	115
256-504/333-000	121
256-504/334-000	119
256-505	115
256-505/333-000	121
256-505/334-000	119
256-506	115
256-506/333-000	121
256-506/334-000	119
256-507	115
256-507/333-000	121
256-507/334-000	119
256-508	115
256-508/333-000	121
256-508/334-000	119
256-509	115
256-509/333-000	121
256-509/334-000	119
256-510	115
256-510/333-000	121
256-510/334-000	119
256-512	115
256-512/333-000	121
256-512/334-000	119
256-561	117
256-600	113
256-601	113
256-602	115
256-602/333-000	121
256-602/334-000	119
256-603	115
256-603/333-000	121
256-603/334-000	119
256-604	115
256-604/333-000	121
256-604/334-000	119
256-605	115
256-605/333-000	121
256-605/334-000	119
256-606	115
256-606/333-000	121
256-606/334-000	119
256-607	115
256-607/333-000	121
256-607/334-000	119
256-608	115
256-608/333-000	121
256-608/334-000	119
256-609	115
256-609/333-000	121
256-609/334-000	119
256-610	115
256-610/333-000	121
256-610/334-000	119
256-612	115
256-612/333-000	121
256-612/334-000	119
256-661	117

Item No.	Page
256 Series	
256-700	113
256-740	113
256-742	113
256-743	113
256-744	113
256-746	113
256-747	113
256-750	113
256-752	113
256-753	113
256-754	113
256-756	113
256-757	113
256-760	113
256-762	113
256-763	113
256-764	113
256-766	113
256-767	113
256-800	113
256-840	117
256-842	117
256-843	117
256-844	117
256-846	117
256-847	117
256-850	117
256-852	117
256-853	117
256-854	117
256-856	117
256-857	117
256-860	117
256-862	117
256-863	117
256-864	117
256-866	117
256-867	117
257 Series	
257-100	123
257-200	123
257-300	123
257-400	123
257-401	123
257-402	125
257-402/333-000	131
257-403	125
257-403/333-000	131
257-404	125
257-404/333-000	131
257-405	125
257-405/333-000	131
257-406	125
257-406/333-000	131
257-407	125
257-407/333-000	131
257-408	125
257-408/333-000	131
257-409	125
257-409/333-000	131
257-410	125
257-410/333-000	131
257-412	125
257-412/333-000	131
257-451	127
257-452	129
257-453	129
257-454	129
257-455	129
257-456	129
257-457	129
257-458	129
257-459	129
257-460	129
257-462	129
257-500	123
257-501	123
257-502	125
257-502/333-000	131
257-503	125

Item Number Index

Item No.	Page
257 Series	
257-503/333-000	131
257-504	125
257-504/333-000	131
257-505	125
257-505/333-000	131
257-506	125
257-506/333-000	131
257-507	125
257-507/333-000	131
257-508	125
257-508/333-000	131
257-509	125
257-509/333-000	131
257-510	125
257-510/333-000	131
257-512	125
257-512/333-000	131
257-551	127
257-552	129
257-553	129
257-554	129
257-555	129
257-556	129
257-557	129
257-558	129
257-559	129
257-560	129
257-562	129
257-600	123
257-602	125
257-602/333-000	131
257-603	125
257-603/333-000	131
257-604	125
257-604/333-000	131
257-605	125
257-605/333-000	131
257-606	125
257-606/333-000	131
257-607	125
257-607/333-000	131
257-608	125
257-608/333-000	131
257-609	125
257-609/333-000	131
257-610	125
257-610/333-000	131
257-612	125
257-612/333-000	131
257-651	127
257-652	129
257-653	129
257-654	129
257-655	129
257-656	129
257-657	129
257-658	129
257-659	129
257-660	129
257-662	129
257-700	123
257-740	123
257-742	123
257-743	123
257-744	123
257-746	123
257-747	123
257-750	123
257-752	123
257-753	123
257-754	123
257-756	123
257-757	123
257-760	123
257-762	123
257-763	123
257-764	123
257-766	123
257-767	123
257-801	123
257-811	123

Item No.	Page
257 Series	
257-821	123
257-840	127
257-842	127
257-843	127
257-844	127
257-846	127
257-847	127
257-850	127
257-852	127
257-853	127
257-854	127
257-856	127
257-857	127
257-860	127
257-862	127
257-863	127
257-864	127
257-866	127
257-867	127
280 Series	
280-402	251
280-432	637
280-433	637
280-434	637
280-435	637
280-436	637
280-437	637
280-438	637
280-440	637
288 Series	
288-001	1060
288-002	1060
288-003	1060
288-600	1058
288-601	1058
288-602	1058
288-620	1058
288-621	1058
288-622	1058
288-626	1059
288-627	1059
713 Series	
713-126	537
713-127	537
713-128	537
713-129	537
713-130	537
713-1102	517
713-1102/037-000	517
713-1102/107-000	517
713-1103	517
713-1103/037-000	517
713-1103/107-000	517
713-1104	517
713-1104/037-000	517
713-1104/107-000	517
713-1105	517
713-1105/037-000	517
713-1105/107-000	517
713-1106	517
713-1106/037-000	517
713-1106/107-000	517
713-1107	517
713-1107/037-000	517
713-1107/107-000	517
713-1108	517
713-1108/037-000	517
713-1108/107-000	517
713-1109	517
713-1109/037-000	517
713-1109/107-000	517
713-1110	517
713-1110/037-000	517
713-1110/107-000	517
713-1111	517

Item No.	Page
713 Series	
713-1111/037-000	517
713-1111/107-000	517
713-1112	517
713-1112/037-000	517
713-1112/107-000	517
713-1113	517
713-1113/037-000	517
713-1113/107-000	517
713-1114	517
713-1114/037-000	517
713-1114/107-000	517
713-1115	517
713-1115/037-000	517
713-1115/107-000	517
713-1116	517
713-1116/037-000	517
713-1116/107-000	517
713-1117	517
713-1117/037-000	517
713-1117/107-000	517
713-1118	517
713-1118/037-000	517
713-1118/107-000	517
713-1402	519
713-1402/037-000	520
713-1402/105-000	526
713-1402/107-000	520
713-1402/116-000	530
713-1402/117-000	528
713-1403	519
713-1403/037-000	520
713-1403/105-000	526
713-1403/105-000/997-405	526
713-1403/107-000	520
713-1403/116-000	530
713-1403/116-000/997-405	530
713-1403/117-000	528
713-1403/117-000/997-405	528
713-1404	519
713-1404/037-000	520
713-1404/105-000	526
713-1404/105-000/997-405	526
713-1404/107-000	520
713-1404/116-000	530
713-1404/116-000/997-406	530
713-1404/117-000	528
713-1404/117-000/997-406	528
713-1405	519
713-1405/037-000	520
713-1405/105-000	526
713-1405/105-000/997-405	526
713-1405/107-000	520
713-1405/116-000	530
713-1405/116-000/997-406	530
713-1405/117-000	528
713-1405/117-000/997-406	528
713-1406	519
713-1406/037-000	520
713-1406/105-000	526
713-1406/105-000/997-406	526
713-1406/107-000	520
713-1406/116-000	530
713-1406/116-000/997-406	530
713-1406/117-000	528
713-1406/117-000/997-406	528
713-1407	519
713-1407/037-000	520
713-1407/105-000	526
713-1407/105-000/997-406	526
713-1407/107-000	520
713-1407/116-000	530
713-1407/116-000/997-407	530
713-1407/117-000	528
713-1407/117-000/997-407	528
713-1408	519
713-1408/037-000	520
713-1408/105-000	526
713-1408/105-000/997-406	526
713-1408/107-000	520
713-1408/116-000	530
713-1408/116-000/997-407	530

Item No.	Page
713 Series	
713-1408/117-000	528
713-1408/117-000/997-407	528
713-1409	519
713-1409/037-000	520
713-1409/105-000	526
713-1409/105-000/997-407	526
713-1409/107-000	520
713-1409/116-000	530
713-1409/116-000/997-407	530
713-1409/117-000	528
713-1409/117-000/997-407	528
713-1410	519
713-1410/037-000	520
713-1410/105-000	526
713-1410/105-000/997-407	526
713-1410/107-000	520
713-1410/116-000	530
713-1410/116-000/997-408	530
713-1410/117-000	528
713-1410/117-000/997-408	528
713-1411	519
713-1411/037-000	520
713-1411/105-000	526
713-1411/105-000/997-407	526
713-1411/107-000	520
713-1411/116-000	530
713-1411/116-000/997-408	530
713-1411/117-000	528
713-1411/117-000/997-408	528
713-1412	519
713-1412/037-000	520
713-1412/105-000	526
713-1412/105-000/997-408	526
713-1412/107-000	520
713-1412/116-000	530
713-1412/116-000/997-408	530
713-1412/117-000	528
713-1412/117-000/997-408	528
713-1413	519
713-1413/037-000	520
713-1413/105-000	526
713-1413/105-000/997-408	526
713-1413/107-000	520
713-1413/116-000	530
713-1413/116-000/997-408	530
713-1413/117-000	528
713-1413/117-000/997-408	528
713-1414	519
713-1414/037-000	520
713-1414/105-000	526
713-1414/105-000/997-408	526
713-1414/107-000	520
713-1414/116-000	530
713-1414/116-000/997-408	530
713-1414/117-000	528
713-1414/117-000/997-408	528
713-1415	519
713-1415/037-000	520
713-1415/105-000	526
713-1415/105-000/997-408	526
713-1415/107-000	520
713-1415/116-000	530
713-1415/116-000/997-409	530
713-1415/117-000	528
713-1415/117-000/997-409	528
713-1416	519
713-1416/037-000	520
713-1416/105-000	526
713-1416/105-000/997-408	526
713-1416/107-000	520
713-1416/116-000	530
713-1416/116-000/997-409	530
713-1416/117-000	528
713-1416/117-000/997-409	528
713-1417	519
713-1417/037-000	520
713-1417/105-000	526
713-1417/105-000/997-409	526
713-1417/107-000	520
713-1417/116-000	530
713-1417/116-000/997-409	530

Item Number Index

Item No.	Page
713 Series	
713-1417/117-000	528
713-1417/117-000/997-409	528
713-1418	519
713-1418/037-000	520
713-1418/105-000	526
713-1418/105-000/997-409	526
713-1418/107-000	520
713-1418/116-000	530
713-1418/116-000/997-409	530
713-1418/117-000	528
713-1418/117-000/997-409	528
713-1422	519
713-1422/037-000	520
713-1422/105-000	525
713-1422/107-000	519
713-1422/116-000	529
713-1422/117-000	527
713-1423	519
713-1423/037-000	520
713-1423/105-000	525
713-1423/105-000/997-405	525
713-1423/107-000	519
713-1423/116-000	529
713-1423/116-000/997-405	529
713-1423/117-000	527
713-1423/117-000/997-405	527
713-1424	519
713-1424/037-000	520
713-1424/105-000	525
713-1424/105-000/997-405	525
713-1424/107-000	519
713-1424/116-000	529
713-1424/116-000/997-406	529
713-1424/117-000	527
713-1424/117-000/997-406	527
713-1425	519
713-1425/037-000	520
713-1425/105-000	525
713-1425/105-000/997-405	525
713-1425/107-000	519
713-1425/116-000	529
713-1425/116-000/997-406	529
713-1425/117-000	527
713-1425/117-000/997-406	527
713-1426	519
713-1426/037-000	520
713-1426/105-000	525
713-1426/105-000/997-406	525
713-1426/107-000	519
713-1426/116-000	529
713-1426/116-000/997-406	529
713-1426/117-000	527
713-1426/117-000/997-406	527
713-1427	519
713-1427/037-000	520
713-1427/105-000	525
713-1427/105-000/997-406	525
713-1427/107-000	519
713-1427/116-000	529
713-1427/116-000/997-407	529
713-1427/117-000	527
713-1427/117-000/997-407	527
713-1428	519
713-1428/037-000	520
713-1428/105-000	525
713-1428/105-000/997-406	525
713-1428/107-000	519
713-1428/116-000	529
713-1428/116-000/997-407	529
713-1428/117-000	527
713-1428/117-000/997-407	527
713-1429	519
713-1429/037-000	520
713-1429/105-000	525
713-1429/105-000/997-407	525
713-1429/107-000	519
713-1429/116-000	529
713-1429/116-000/997-407	529
713-1429/117-000	527
713-1429/117-000/997-407	527
713-1430	519

Item No.	Page
713 Series	
713-1430/037-000	520
713-1430/105-000	525
713-1430/105-000/997-407	525
713-1430/107-000	519
713-1430/116-000	529
713-1430/116-000/997-408	529
713-1430/117-000	527
713-1430/117-000/997-408	527
713-1431	519
713-1431/037-000	520
713-1431/105-000	525
713-1431/105-000/997-407	525
713-1431/107-000	519
713-1431/116-000	529
713-1431/116-000/997-408	529
713-1431/117-000	527
713-1431/117-000/997-408	527
713-1432	519
713-1432/037-000	520
713-1432/105-000	525
713-1432/105-000/997-408	525
713-1432/107-000	519
713-1432/116-000	529
713-1432/116-000/997-408	529
713-1432/117-000	527
713-1432/117-000/997-408	527
713-1433	519
713-1433/037-000	520
713-1433/105-000	525
713-1433/105-000/997-408	525
713-1433/107-000	519
713-1433/116-000	529
713-1433/116-000/997-408	529
713-1433/117-000	527
713-1433/117-000/997-408	527
713-1434	519
713-1434/037-000	520
713-1434/105-000	525
713-1434/105-000/997-408	525
713-1434/107-000	519
713-1434/116-000	529
713-1434/116-000/997-408	529
713-1434/117-000	527
713-1434/117-000/997-408	527
713-1435	519
713-1435/037-000	520
713-1435/105-000	525
713-1435/105-000/997-408	525
713-1435/107-000	519
713-1435/116-000	529
713-1435/116-000/997-409	529
713-1435/117-000	527
713-1435/117-000/997-409	527
713-1436	519
713-1436/037-000	520
713-1436/105-000	525
713-1436/105-000/997-408	525
713-1436/107-000	519
713-1436/116-000	529
713-1436/116-000/997-409	529
713-1436/117-000	527
713-1436/117-000/997-409	527
713-1437	519
713-1437/037-000	520
713-1437/105-000	525
713-1437/105-000/997-409	525
713-1437/107-000	519
713-1437/116-000	529
713-1437/116-000/997-409	529
713-1437/117-000	527
713-1437/117-000/997-409	527
713-1438	519
713-1438/037-000	520
713-1438/105-000	525
713-1438/105-000/997-409	525
713-1438/107-000	519
713-1438/116-000	529
713-1438/116-000/997-409	529
713-1438/117-000	527
713-1438/117-000/997-409	527
713-1492/037-000	533

Item No.	Page
714 Series	
714-101	536
714-102	543
714-103	543
714-104	543
714-105	543
714-106	543
714-108	543
714-110	543
714-112	543
714-114	543
714-115	543
714-116	543
714-132	545
714-133	545
714-134	545
714-135	545
714-136	545
714-138	545
714-140	545
714-142	545
714-144	545
714-145	545
714-146	545
714-162	545
714-163	545
714-164	545
714-165	545
714-166	545
714-168	545
714-170	545
714-172	545
714-174	545
714-175	545
714-176	545
721 Series	
721-102/008-000	554
721-102/026-000	553
721-102/031-000	554
721-102/037-000	553
721-103/008-000	554
721-103/026-000	553
721-103/031-000	554
721-103/037-000	553
721-104/008-000	554
721-104/026-000	553
721-104/031-000	554
721-104/037-000	553
721-105/008-000	554
721-105/026-000	553
721-105/031-000	554
721-105/037-000	553
721-106/008-000	554
721-106/026-000	553
721-106/027-000	554
721-106/031-000	554
721-106/037-000	553
721-107/008-000	554
721-107/026-000	553
721-107/027-000	554
721-107/031-000	554
721-107/037-000	553
721-108/008-000	554
721-108/026-000	553
721-108/027-000	554
721-108/031-000	554
721-108/037-000	553
721-109/008-000	554
721-109/026-000	553
721-109/027-000	554
721-109/031-000	554
721-109/037-000	553
721-110/008-000	554
721-110/026-000	553
721-110/027-000	554
721-110/031-000	554
721-110/037-000	553
721-111/008-000	554
721-111/026-000	553
721-111/027-000	554
721-111/031-000	554

Item No.	Page
721 Series	
721-111/037-000	553
721-112/008-000	554
721-112/026-000	553
721-112/027-000	554
721-112/031-000	554
721-112/037-000	553
721-113/008-000	554
721-113/026-000	553
721-113/027-000	554
721-113/031-000	554
721-113/037-000	553
721-113/125-000	553
721-114/008-000	554
721-114/026-000	553
721-114/027-000	554
721-114/031-000	554
721-114/037-000	553
721-114/125-000	553
721-115/008-000	554
721-115/026-000	553
721-115/027-000	554
721-115/031-000	554
721-115/037-000	553
721-115/125-000	553
721-116/008-000	554
721-116/026-000	553
721-116/027-000	554
721-116/031-000	554
721-116/037-000	553
721-116/125-000	553
721-120/008-000	554
721-120/026-000	553
721-120/027-000	554
721-120/031-000	554
721-120/037-000	553
721-132/001-000	587
721-133/001-000	587
721-133/001-040	591
721-134/001-000	587
721-134/001-040	591
721-135/001-000	587
721-135/001-040	591
721-136/001-000	587
721-137/001-000	587
721-138/001-000	587
721-139/001-000	587
721-140/001-000	587
721-141/001-000	587
721-142/001-000	587
721-143/001-000	587
721-144/001-000	587
721-145/001-000	587
721-146/001-000	587
721-150/001-000	587
721-162/001-000	589
721-163/001-000	589
721-163/001-040	593
721-164/001-000	589
721-164/001-040	593
721-165/001-000	589
721-165/001-040	593
721-166/001-000	589
721-167/001-000	589
721-168/001-000	589
721-169/001-000	589
721-170/001-000	589
721-171/001-000	589
721-172/001-000	589
721-173/001-000	589
721-174/001-000	589
721-175/001-000	589
721-176/001-000	589
721-180/001-000	589
721-202/008-000	596
721-202/026-000	595
721-202/031-000	596
721-202/037-000	595
721-202/124-000	595
721-203/008-000	596
721-203/026-000	595
721-203/031-000	596

Item Number Index

Item No.	Page
721 Series	
721-203/037-000	595
721-203/124-000	595
721-204/008-000	596
721-204/026-000	595
721-204/031-000	596
721-204/037-000	595
721-204/124-000	595
721-205/008-000	596
721-205/026-000	595
721-205/031-000	596
721-205/037-000	595
721-205/124-000	595
721-206/008-000	596
721-206/026-000	595
721-206/027-000	596
721-206/031-000	596
721-206/037-000	595
721-206/125-000	595
721-207/008-000	596
721-207/026-000	595
721-207/031-000	596
721-207/037-000	595
721-207/125-000	595
721-208/008-000	596
721-208/026-000	595
721-208/027-000	596
721-208/031-000	596
721-208/037-000	595
721-208/125-000	595
721-209/008-000	596
721-209/026-000	595
721-209/027-000	596
721-209/031-000	596
721-209/037-000	595
721-209/125-000	595
721-210/008-000	596
721-210/026-000	595
721-210/031-000	596
721-210/037-000	595
721-210/125-000	595
721-211/008-000	596
721-211/026-000	595
721-211/125-000	595
721-212/008-000	596
721-212/026-000	595
721-212/027-000	596
721-212/031-000	596
721-212/037-000	595
721-212/125-000	595
721-232/001-000	621
721-233/001-000	621
721-233/001-040	625
721-234/001-000	621
721-234/001-040	625
721-235/001-000	621
721-235/001-040	625
721-236/001-000	621
721-237/001-000	621
721-238/001-000	621
721-239/001-000	621
721-240/001-000	621
721-241/001-000	621
721-242/001-000	621
721-262/001-000	623
721-263/001-000	623
721-263/001-040	627
721-264/001-000	623
721-264/001-040	627
721-265/001-000	623
721-265/001-040	627
721-266/001-000	623
721-267/001-000	623
721-268/001-000	623
721-269/001-000	623
721-270/001-000	623
721-271/001-000	623
721-272/001-000	623
721-302/008-000	559
721-302/031-000	559
721-303/008-000	559
721-303/031-000	559

Item No.	Page
721 Series	
721-304/008-000	559
721-304/031-000	559
721-305/008-000	559
721-305/031-000	559
721-306/008-000	559
721-306/031-000	559
721-307/008-000	559
721-307/031-000	559
721-308/008-000	559
721-308/031-000	559
721-309/008-000	559
721-309/031-000	559
721-310/008-000	559
721-310/031-000	559
721-311/008-000	559
721-311/031-000	559
721-312/008-000	559
721-312/031-000	559
721-313/008-000	559
721-313/031-000	559
721-314/008-000	559
721-314/031-000	559
721-315/008-000	559
721-315/031-000	559
721-316/008-000	559
721-316/031-000	559
721-320/008-000	559
721-320/031-000	559
721-332/008-000	599
721-332/031-000	599
721-333/008-000	599
721-333/031-000	599
721-334/008-000	599
721-334/031-000	599
721-335/008-000	599
721-335/031-000	599
721-336/008-000	599
721-336/031-000	599
721-337/008-000	599
721-337/031-000	599
721-338/008-000	599
721-338/031-000	599
721-339/008-000	599
721-339/031-000	599
721-340/008-000	599
721-340/031-000	599
721-341/008-000	599
721-341/031-000	599
721-342/008-000	599
721-342/031-000	599
721-432/001-000	587
721-433/001-000	587
721-433/001-040	591
721-434/001-000	587
721-434/001-040	591
721-435/001-000	587
721-435/001-040	591
721-436/001-000	587
721-437/001-000	587
721-438/001-000	587
721-439/001-000	587
721-440/001-000	587
721-441/001-000	587
721-442/001-000	587
721-443/001-000	587
721-444/001-000	587
721-445/001-000	587
721-446/001-000	587
721-450/001-000	587
721-462/001-000	589
721-463/001-000	589
721-463/001-040	593
721-464/001-000	589
721-464/001-040	593
721-465/001-000	589
721-465/001-040	593
721-466/001-000	589
721-467/001-000	589
721-468/001-000	589
721-469/001-000	589
721-470/001-000	589

Item No.	Page
721 Series	
721-471/001-000	589
721-472/001-000	589
721-473/001-000	589
721-474/001-000	589
721-475/001-000	589
721-476/001-000	589
721-480/001-000	589
721-602	569
721-602/018-000	569
721-602/019-000	569
721-602/114-000	570
721-603	569
721-603/000-042	573
721-603/018-000	569
721-603/018-042	573
721-603/019-000	569
721-603/019-042	573
721-603/114-000	570
721-603/114-042	574
721-604	569
721-604/000-042	573
721-604/018-000	569
721-604/018-042	573
721-604/019-000	569
721-604/019-042	573
721-604/114-000	570
721-604/114-042	574
721-605	569
721-605/000-042	573
721-605/018-000	569
721-605/018-042	573
721-605/019-000	569
721-605/019-042	573
721-605/114-000	570
721-605/114-042	574
721-606	569
721-606/018-000	569
721-606/019-000	569
721-606/114-000	570
721-607	569
721-607/018-000	569
721-607/019-000	569
721-607/114-000	570
721-608	569
721-608/018-000	569
721-608/019-000	569
721-608/114-000	570
721-609	569
721-609/018-000	569
721-609/019-000	569
721-609/114-000	570
721-610	569
721-610/018-000	569
721-610/019-000	569
721-610/114-000	570
721-611	569
721-611/018-000	569
721-611/019-000	569
721-611/114-000	570
721-612	569
721-612/018-000	569
721-612/019-000	569
721-612/114-000	570
721-613	569
721-613/018-000	569
721-613/019-000	569
721-613/114-000	570
721-614	569
721-614/018-000	569
721-614/019-000	569
721-614/114-000	570
721-615	569
721-615/018-000	569
721-615/019-000	569
721-615/114-000	570
721-616	569
721-616/018-000	569
721-616/019-000	569
721-616/114-000	570
721-620	569
721-620/018-000	569

Item No.	Page
721 Series	
721-620/019-000	569
721-620/114-000	570
721-832/001-000	621
721-833/001-000	621
721-833/001-040	625
721-834/001-000	621
721-834/001-040	625
721-835/001-000	621
721-835/001-040	625
721-836/001-000	621
721-837/001-000	621
721-838/001-000	621
721-839/001-000	621
721-840/001-000	621
721-841/001-000	621
721-842/001-000	621
721-862/001-000	623
721-863/001-000	623
721-863/001-040	627
721-864/001-000	623
721-864/001-040	627
721-865/001-000	623
721-865/001-040	627
721-866/001-000	623
721-867/001-000	623
721-868/001-000	623
721-869/001-000	623
721-870/001-000	623
721-871/001-000	623
721-872/001-000	623
721-2102/026-000	561
721-2102/037-000	561
721-2103/026-000	561
721-2103/037-000	561
721-2104/026-000	561
721-2104/037-000	561
721-2105/026-000	561
721-2105/037-000	561
721-2106/026-000	561
721-2106/037-000	561
721-2107/026-000	561
721-2107/037-000	561
721-2108/026-000	561
721-2108/037-000	561
721-2109/026-000	561
721-2109/037-000	561
721-2110/026-000	561
721-2110/037-000	561
721-2111/026-000	561
721-2111/037-000	561
721-2112/026-000	561
721-2112/037-000	561
721-2113/026-000	561
721-2113/037-000	561
721-2114/026-000	561
721-2114/037-000	561
721-2115/026-000	561
721-2115/037-000	561
721-2116/026-000	561
721-2116/037-000	561
721-2202/026-000	601
721-2202/037-000	601
721-2203/026-000	601
721-2203/037-000	601
721-2204/026-000	601
721-2204/037-000	601
721-2205/026-000	601
721-2205/037-000	601
721-2206/026-000	601
721-2206/037-000	601
721-2207/026-000	601
721-2207/037-000	601
721-2208/026-000	601
721-2208/037-000	601
721-2209/026-000	601
721-2209/037-000	601
721-2210/026-000	601
721-2210/037-000	601
721-2211/026-000	601
721-2211/037-000	601
721-2212/026-000	601

Item Number Index

Item No.	Page
721 Series	
721-2212/037-000	601
722 Series	
722-102/026-000	557
722-103/026-000	557
722-104/026-000	557
722-105/026-000	557
722-106/026-000	557
722-107/026-000	557
722-108/026-000	557
722-109/026-000	557
722-110/026-000	557
722-111/026-000	557
722-112/026-000	557
722-114/026-000	557
722-116/026-000	557
722-120/026-000	557
722-132	583
722-132/031-000	584
722-132/039-000	584
722-132/047-000	585
722-133	583
722-133/031-000	584
722-133/039-000	584
722-133/047-000	585
722-134	583
722-134/031-000	584
722-134/039-000	584
722-134/047-000	585
722-135	583
722-135/031-000	584
722-135/039-000	584
722-135/047-000	585
722-136	583
722-136/031-000	584
722-136/039-000	584
722-136/047-000	585
722-137	583
722-137/031-000	584
722-137/039-000	584
722-137/047-000	585
722-138	583
722-138/031-000	584
722-138/039-000	584
722-138/047-000	585
722-139	583
722-139/031-000	584
722-139/039-000	584
722-139/047-000	585
722-140	583
722-140/031-000	584
722-140/039-000	584
722-140/047-000	585
722-141	583
722-141/031-000	584
722-141/039-000	584
722-141/047-000	585
722-142	583
722-142/031-000	584
722-142/039-000	584
722-142/047-000	585
722-143	583
722-143/031-000	584
722-143/039-000	584
722-143/047-000	585
722-144	583
722-144/031-000	584
722-144/039-000	584
722-144/047-000	585
722-145	583
722-145/031-000	584
722-145/039-000	584
722-145/047-000	585
722-146	583
722-146/031-000	584
722-146/039-000	584
722-146/047-000	585
722-150	583
722-150/031-000	584
722-150/039-000	584

Item No.	Page
722 Series	
722-150/047-000	585
722-202/026-000	557
722-203/026-000	557
722-204/026-000	557
722-205/026-000	557
722-206/026-000	557
722-207/026-000	557
722-208/026-000	557
722-209/026-000	557
722-210/026-000	557
722-211/026-000	557
722-212/026-000	557
722-213/026-000	557
722-214/026-000	557
722-215/026-000	557
722-216/026-000	557
722-220/026-000	557
722-232	583
722-232/031-000	584
722-232/039-000	583
722-232/047-000	585
722-233	583
722-233/031-000	584
722-233/039-000	583
722-233/047-000	585
722-234	583
722-234/031-000	584
722-234/039-000	583
722-234/047-000	585
722-235	583
722-235/031-000	584
722-235/039-000	583
722-235/047-000	585
722-236	583
722-236/031-000	584
722-236/039-000	583
722-236/047-000	585
722-237	583
722-237/031-000	584
722-237/039-000	583
722-237/047-000	585
722-238	583
722-238/031-000	584
722-238/039-000	583
722-238/047-000	585
722-239	583
722-239/031-000	584
722-239/039-000	583
722-239/047-000	585
722-240	583
722-240/031-000	584
722-240/039-000	583
722-240/047-000	585
722-241	583
722-241/031-000	584
722-241/039-000	583
722-241/047-000	585
722-242	583
722-242/031-000	584
722-242/039-000	583
722-242/047-000	585
722-243	583
722-243/031-000	584
722-243/039-000	583
722-243/047-000	585
722-244	583
722-244/031-000	584
722-244/039-000	583
722-244/047-000	585
722-245	583
722-245/031-000	584
722-245/039-000	583
722-245/047-000	585
722-246	583
722-246/031-000	584
722-246/039-000	583
722-246/047-000	585
722-250	583
722-250/031-000	584
722-250/039-000	583
722-250/047-000	585

Item No.	Page
722 Series	
722-732	617
722-732/031-000	618
722-732/039-000	618
722-732/047-000	619
722-733	617
722-733/031-000	618
722-733/039-000	618
722-733/047-000	619
722-734	617
722-734/031-000	618
722-734/039-000	618
722-734/047-000	619
722-735	617
722-735/031-000	618
722-735/039-000	618
722-735/047-000	619
722-736	617
722-736/031-000	618
722-736/039-000	618
722-736/047-000	619
722-737	617
722-737/031-000	618
722-737/039-000	618
722-737/047-000	619
722-738	617
722-738/031-000	618
722-738/039-000	618
722-738/047-000	619
722-739	617
722-739/031-000	618
722-739/039-000	618
722-739/047-000	619
722-740	617
722-740/031-000	618
722-740/039-000	618
722-740/047-000	619
722-741	617
722-741/031-000	618
722-741/039-000	618
722-741/047-000	619
722-742	617
722-742/031-000	618
722-742/039-000	618
722-742/047-000	619
722-832	617
722-832/031-000	618
722-832/039-000	617
722-832/047-000	619
722-833	617
722-833/031-000	618
722-833/039-000	617
722-833/047-000	619
722-834	617
722-834/031-000	618
722-834/039-000	617
722-834/047-000	619
722-835	617
722-835/031-000	618
722-835/039-000	617
722-835/047-000	619
722-836	617
722-836/031-000	618
722-836/039-000	617
722-836/047-000	619
722-837	617
722-837/031-000	618
722-837/039-000	617
722-837/047-000	619
722-838	617
722-838/031-000	618
722-838/039-000	617
722-838/047-000	619
722-839	617
722-839/031-000	618
722-839/039-000	617
722-839/047-000	619
722-840	617
722-840/031-000	618
722-840/039-000	617
722-840/047-000	619
722-841/031-000	618

Item No.	Page
722 Series	
722-841/039-000	617
722-841/047-000	619
722-842	617
722-842/031-000	618
722-842/039-000	617
722-842/047-000	619
723 Series	
723-602	609
723-602/018-000	609
723-602/019-000	609
723-602/114-000	610
723-603	609
723-603/000-042	613
723-603/018-000	609
723-603/018-042	613
723-603/019-000	609
723-603/019-042	613
723-603/114-000	610
723-603/114-042	614
723-604	609
723-604/000-042	613
723-604/018-000	609
723-604/018-042	613
723-604/019-000	609
723-604/019-042	613
723-604/114-000	610
723-604/114-042	614
723-605	609
723-605/000-042	613
723-605/018-000	609
723-605/018-042	613
723-605/019-000	609
723-605/019-042	613
723-605/114-000	610
723-605/114-042	614
723-606	609
723-606/018-000	609
723-606/019-000	609
723-606/114-000	610
723-607	609
723-607/018-000	609
723-607/019-000	609
723-607/114-000	610
723-608	609
723-608/018-000	609
723-608/019-000	609
723-608/114-000	610
723-609	609
723-609/018-000	609
723-609/019-000	609
723-609/114-000	610
723-610	609
723-610/018-000	609
723-610/019-000	609
723-610/114-000	610
723-611	609
723-611/018-000	609
723-611/019-000	609
723-611/114-000	610
723-612	609
723-612/018-000	609
723-612/019-000	609
723-612/114-000	610
730 Series	
730-103	1041
730-106	1045
730-113	1043
730-116	1047
730-123	1041
730-126	1045
731 Series	
731-132	1033
731-133	1033
731-134	1033
731-135	1033
731-136/048-000	1033
731-137/048-000	1033
731-138/048-000	1033

Item Number Index

Item No.	Page
731 Series	
731-139/048-000	1033
731-140/048-000	1033
731-141/048-000	1033
731-142/048-000	1033
731-162	1035
731-163	1035
731-164	1035
731-165	1035
731-166/048-000	1035
731-167/048-000	1035
731-168/048-000	1035
731-169/048-000	1035
731-170/048-000	1035
731-171/048-000	1035
731-172/048-000	1035
731-502/008-000	665
731-502/031-000	666
731-503/008-000	665
731-503/031-000	666
731-504/008-000	665
731-504/031-000	666
731-505/008-000	665
731-505/031-000	666
731-506/008-000	665
731-506/031-000	666
731-507/008-000	665
731-507/031-000	666
731-508/008-000	665
731-508/031-000	666
731-509/008-000	665
731-509/031-000	666
731-510/008-000	665
731-510/031-000	666
731-511/008-000	665
731-511/031-000	666
731-512/008-000	665
731-512/031-000	666
731-513/008-000	665
731-513/031-000	666
731-514/008-000	665
731-514/031-000	666
731-515/008-000	665
731-515/031-000	666
731-516/008-000	665
731-516/031-000	666
731-517/008-000	665
731-517/031-000	666
731-518/008-000	665
731-518/031-000	666
731-519/008-000	665
731-519/031-000	666
731-520/008-000	665
731-520/031-000	666
731-532/008-000	745
731-532/031-000	746
731-533/008-000	745
731-533/031-000	746
731-534/008-000	745
731-534/031-000	746
731-535/008-000	745
731-535/031-000	746
731-536/008-000	745
731-536/031-000	746
731-537/008-000	745
731-537/031-000	746
731-538/008-000	745
731-538/031-000	746
731-539/008-000	745
731-539/031-000	746
731-540/008-000	745
731-540/031-000	746
731-541/008-000	745
731-541/031-000	746
731-542/008-000	745
731-542/031-000	746
731-543/008-000	745
731-543/031-000	746
731-546/008-000	745
731-546/031-000	746
731-602	757
731-602/018-000	757

Item No.	Page
731 Series	
731-602/019-000	757
731-602/114-000	758
731-603	757
731-603/018-000	757
731-603/019-000	757
731-603/114-000	758
731-604	757
731-604/018-000	757
731-604/019-000	757
731-604/114-000	758
731-605	757
731-605/018-000	757
731-605/019-000	757
731-605/114-000	758
731-606	757
731-606/018-000	757
731-606/019-000	757
731-606/114-000	758
731-607	757
731-607/018-000	757
731-607/019-000	757
731-607/114-000	758
731-608	757
731-608/018-000	757
731-608/019-000	757
731-608/114-000	758
731-609	757
731-609/018-000	757
731-609/019-000	757
731-609/114-000	758
731-610	757
731-610/018-000	757
731-610/019-000	757
731-610/114-000	758
731-611	757
731-611/018-000	757
731-611/019-000	757
731-611/114-000	758
731-612	757
731-612/018-000	757
731-612/019-000	757
731-612/114-000	758
731-613	757
731-613/018-000	757
731-613/019-000	757
731-613/114-000	758
731-616	757
731-616/018-000	757
731-616/019-000	757
731-616/114-000	758
731-632	793
731-632/018-000	793
731-632/019-000	793
731-632/114-000	794
731-633	793
731-633/018-000	793
731-633/019-000	793
731-633/114-000	794
731-634	793
731-634/018-000	793
731-634/019-000	793
731-634/114-000	794
731-635	793
731-635/018-000	793
731-635/019-000	793
731-635/114-000	794
731-636	793
731-636/018-000	793
731-636/019-000	793
731-636/114-000	794
731-637	793
731-637/018-000	793
731-637/019-000	793
731-637/114-000	794
731-638	793
731-638/018-000	793
731-638/019-000	793
731-638/114-000	794
731-639	793
731-639/018-000	793
731-639/019-000	793

Item No.	Page
731 Series	
731-639/114-000	794
731-640	793
731-640/018-000	793
731-640/019-000	793
731-640/114-000	794
731-641	793
731-641/018-000	793
731-641/019-000	793
731-641/114-000	794
731-642	793
731-642/018-000	793
731-642/019-000	793
731-642/114-000	794
732 Series	
732-102/026-000	743
732-103/026-000	743
732-104/026-000	743
732-105/026-000	743
732-106/026-000	743
732-107/026-000	743
732-108/026-000	743
732-109/026-000	743
732-110/026-000	743
732-111/026-000	743
732-112/026-000	743
732-116/026-000	743
732-122/026-000	785
732-123/026-000	785
732-124/026-000	785
732-125/026-000	785
732-126/026-000	785
732-127/026-000	785
732-128/026-000	785
732-129/026-000	785
732-130/026-000	785
732-131/026-000	785
732-132/026-000	785
733 Series	
733-102	417
733-102/037-000	417
733-103	417
733-103/037-000	417
733-104	417
733-104/037-000	417
733-105	417
733-105/037-000	417
733-106	417
733-106/037-000	417
733-107	417
733-107/037-000	417
733-108	417
733-108/037-000	417
733-109	417
733-109/037-000	417
733-110	417
733-110/037-000	417
733-112	417
733-112/037-000	417
733-130	430
733-191	430
733-202	419
733-203	419
733-204	419
733-205	419
733-206	419
733-207	419
733-208	419
733-209	419
733-210	419
733-212	419
733-330	432
733-331	432
733-332	421
733-332/105-604	426
733-332/105-604/997-446	426
733-333	421
733-333/105-604	426

Item No.	Page
733 Series	
733-333/105-604/997-446	426
733-334	421
733-334/105-604	426
733-334/105-604/997-446	426
733-335	421
733-335/105-604	426
733-335/105-604/997-446	426
733-336	421
733-336/105-604	426
733-336/105-604/997-446	426
733-337	421
733-337/105-604	426
733-337/105-604/997-446	426
733-338	421
733-338/105-604	426
733-338/105-604/997-446	426
733-339	421
733-339/105-604	426
733-339/105-604/997-446	426
733-340	421
733-340/105-604	426
733-340/105-604/997-446	426
733-342	421
733-342/105-604	426
733-342/105-604/997-446	426
733-362	421
733-362/105-604	425
733-362/105-604/997-406	425
733-363	421
733-363/105-604	425
733-363/105-604/997-406	425
733-364	421
733-364/105-604	425
733-364/105-604/997-406	425
733-365	421
733-365/105-604	425
733-365/105-604/997-406	425
733-366	421
733-366/105-604	425
733-366/105-604/997-406	425
733-367	421
733-367/105-604	425
733-367/105-604/997-406	425
733-368	421
733-368/105-604	425
733-368/105-604/997-406	425
733-369	421
733-369/105-604	425
733-369/105-604/997-406	425
733-370	421
733-370/105-604	425
733-370/105-604/997-406	425
733-372	421
733-372/105-604	425
733-372/105-604/997-406	425
734 Series	
734-102	441
734-102/008-000	442
734-102/037-000	441
734-102/107-000	441
734-103	441
734-103/008-000	442
734-103/037-000	441
734-103/107-000	441
734-104	441
734-104/008-000	442
734-104/037-000	441
734-104/107-000	441
734-105	441
734-105/008-000	442
734-105/037-000	441
734-105/107-000	441
734-106	441
734-106/008-000	442
734-106/037-000	441
734-106/107-000	441
734-107	441
734-107/008-000	442
734-107/037-000	441

Item Number Index

Item No.	Page
734 Series	
734-107/107-000	441
734-108	441
734-108/008-000	442
734-108/037-000	441
734-108/107-000	441
734-109	441
734-109/008-000	442
734-109/037-000	441
734-109/107-000	441
734-110	441
734-110/008-000	442
734-110/037-000	441
734-110/107-000	441
734-111	441
734-111/008-000	442
734-111/037-000	441
734-111/107-000	441
734-112	441
734-112/008-000	442
734-112/037-000	441
734-112/107-000	441
734-113	441
734-113/008-000	442
734-113/037-000	441
734-113/107-000	441
734-114	441
734-114/008-000	442
734-114/037-000	441
734-114/107-000	441
734-116	441
734-116/008-000	442
734-116/037-000	441
734-116/107-000	441
734-118	441
734-118/008-000	442
734-118/037-000	441
734-118/107-000	441
734-120	441
734-120/008-000	442
734-120/037-000	441
734-120/107-000	441
734-124	441
734-124/008-000	442
734-124/037-000	441
734-124/107-000	441
734-126	506
734-127	433
734-128	433
734-129	433
734-130	497
734-132	463
734-132/105-604	470
734-132/105-604/997-405	470
734-132/108-000	464
734-133	463
734-133/105-604	470
734-133/105-604/997-405	470
734-133/108-000	464
734-134	463
734-134/105-604	470
734-134/105-604/997-405	470
734-134/108-000	464
734-135	463
734-135/105-604	470
734-135/105-604/997-405	470
734-135/108-000	464
734-136	463
734-136/105-604	470
734-136/105-604/997-407	470
734-136/108-000	464
734-137	463
734-137/105-604	470
734-137/105-604/997-407	470
734-137/108-000	464
734-138	463
734-138/105-604	470
734-138/105-604/997-407	470
734-138/108-000	464
734-139	463
734-139/105-604	470
734-139/105-604/997-407	470

Item No.	Page
734 Series	
734-139/108-000	464
734-140	463
734-140/105-604	470
734-140/105-604/997-407	470
734-140/108-000	464
734-141	463
734-141/105-604	470
734-141/105-604/997-407	470
734-141/108-000	464
734-142	463
734-142/105-604	470
734-142/105-604/997-407	470
734-142/108-000	464
734-143	463
734-143/108-000	464
734-144	463
734-144/105-604	470
734-144/105-604/997-408	470
734-144/108-000	464
734-146	463
734-146/105-604	470
734-146/105-604/997-408	470
734-146/108-000	464
734-148	463
734-148/108-000	464
734-150	463
734-150/108-000	464
734-154	463
734-154/108-000	464
734-159	497
734-162	463
734-162/105-604	469
734-162/105-604/997-405	469
734-162/108-000	464
734-163	463
734-163/105-604	469
734-163/105-604/997-405	469
734-163/108-000	464
734-164	463
734-164/105-604	469
734-164/105-604/997-405	469
734-164/108-000	464
734-165	463
734-165/105-604	469
734-165/105-604/997-405	469
734-165/108-000	464
734-166	463
734-166/105-604	469
734-166/105-604/997-407	469
734-166/108-000	464
734-167	463
734-167/105-604	469
734-167/105-604/997-407	469
734-167/108-000	464
734-168	463
734-168/105-604	469
734-168/105-604/997-407	469
734-168/108-000	464
734-169	463
734-169/105-604	469
734-169/105-604/997-407	469
734-169/108-000	464
734-170	463
734-170/105-604	469
734-170/105-604/997-407	469
734-170/108-000	464
734-171	463
734-171/105-604	469
734-171/105-604/997-407	469
734-171/108-000	464
734-172	463
734-172/105-604	469
734-172/105-604/997-407	469
734-172/108-000	464
734-173	463
734-173/108-000	464
734-174	463
734-174/105-604	469
734-174/105-604/997-408	469
734-174/108-000	464
734-176	463

Item No.	Page
734 Series	
734-176/105-604	469
734-176/105-604/997-408	469
734-176/108-000	464
734-178	463
734-178/108-000	464
734-180	463
734-180/108-000	464
734-184	463
734-184/108-000	464
734-190	496
734-191	496
734-202	473
734-202/008-000	473
734-202/037-000	473
734-203	473
734-203/008-000	473
734-203/037-000	473
734-204	473
734-204/008-000	473
734-204/037-000	473
734-205	473
734-205/008-000	473
734-205/037-000	473
734-206	473
734-206/008-000	473
734-206/037-000	473
734-208	473
734-208/008-000	473
734-208/037-000	473
734-209	473
734-209/008-000	473
734-209/037-000	473
734-210	473
734-210/008-000	473
734-210/037-000	473
734-212	473
734-212/008-000	473
734-212/037-000	473
734-214	473
734-214/008-000	473
734-214/037-000	473
734-215	473
734-215/008-000	473
734-215/037-000	473
734-216	473
734-216/008-000	473
734-216/037-000	473
734-218	473
734-218/008-000	473
734-218/037-000	473
734-219	473
734-219/008-000	473
734-219/037-000	473
734-220	473
734-220/008-000	473
734-220/037-000	473
734-226	507
734-227	507
734-228	507
734-229	507
734-230	496
734-231	496
734-232	485
734-232/105-604	490
734-232/105-604/997-405	490
734-233	485
734-233/105-604	490
734-233/105-604/997-405	490
734-234	485
734-234/105-604	490
734-234/105-604/997-405	490
734-235	485
734-235/105-604	490
734-235/105-604/997-407	490
734-236	485
734-236/105-604	490
734-236/105-604/997-407	490
734-238	485
734-238/105-604	490
734-238/105-604/997-407	490
734-239	485

Item No.	Page
734 Series	
734-240	485
734-240/105-604	490
734-240/105-604/997-407	490
734-242	485
734-242/105-604	490
734-242/105-604/997-408	490
734-244	485
734-245	485
734-246	485
734-248	485
734-249	485
734-250	485
734-262	485
734-262/105-604	489
734-262/105-604/997-405	489
734-263	485
734-263/105-604	489
734-263/105-604/997-405	489
734-264	485
734-264/105-604	489
734-264/105-604/997-405	489
734-265	485
734-265/105-604	489
734-265/105-604/997-407	489
734-266	485
734-266/105-604	489
734-266/105-604/997-407	489
734-268	485
734-268/105-604	489
734-268/105-604/997-407	489
734-269	485
734-270	485
734-270/105-604	489
734-270/105-604/997-407	489
734-272	485
734-272/105-604	489
734-272/105-604/997-408	489
734-274	485
734-275	485
734-276	485
734-278	485
734-279	485
734-280	485
734-302	451
734-302/018-000	451
734-302/019-000	452
734-302/109-000	451
734-303	451
734-303/018-000	451
734-303/019-000	452
734-303/109-000	451
734-304	451
734-304/018-000	451
734-304/019-000	452
734-304/109-000	451
734-305	451
734-305/018-000	451
734-305/019-000	452
734-305/109-000	451
734-306	451
734-306/018-000	451
734-306/019-000	452
734-306/109-000	451
734-307	451
734-307/018-000	451
734-307/019-000	452
734-307/109-000	451
734-308	451
734-308/018-000	451
734-308/019-000	452
734-308/109-000	451
734-309	451
734-309/018-000	451
734-309/019-000	452
734-309/109-000	451
734-310	451
734-310/018-000	451
734-310/019-000	452
734-310/109-000	451
734-311	451
734-311/018-000	451

Item Number Index

Item No.	Page
734 Series	
734-311/019-000	452
734-311/109-000	451
734-312	451
734-312/018-000	451
734-312/019-000	452
734-312/109-000	451
734-313	451
734-313/018-000	451
734-313/019-000	452
734-313/109-000	451
734-314	451
734-314/018-000	451
734-314/019-000	452
734-314/109-000	451
734-316	451
734-316/018-000	451
734-316/019-000	452
734-316/109-000	451
734-318	451
734-318/018-000	451
734-318/019-000	452
734-318/109-000	451
734-320	451
734-320/018-000	451
734-320/019-000	452
734-320/109-000	451
734-324	451
734-324/018-000	451
734-324/019-000	452
734-324/109-000	451
734-326	825
734-327	825
734-328	825
734-329	825
734-332	479
734-332/018-000	479
734-332/019-000	479
734-333	479
734-333/018-000	479
734-333/019-000	479
734-334	479
734-334/018-000	479
734-334/019-000	479
734-335	479
734-335/018-000	479
734-335/019-000	479
734-336	479
734-336/018-000	479
734-336/019-000	479
734-338	479
734-338/018-000	479
734-338/019-000	479
734-339	479
734-339/018-000	479
734-339/019-000	479
734-340	479
734-340/018-000	479
734-340/019-000	479
734-342	479
734-342/018-000	479
734-342/019-000	479
734-344	479
734-344/018-000	479
734-344/019-000	479
734-345	479
734-345/018-000	479
734-345/019-000	479
734-346	479
734-346/018-000	479
734-346/019-000	479
734-348	479
734-348/018-000	479
734-348/019-000	479
734-349	479
734-349/018-000	479
734-349/019-000	479
734-350	479
734-350/018-000	479
734-350/019-000	479
734-362	455
734-362/008-000	456
734-362/037-000	455
734-363	455
734-363/008-000	456
734-363/037-000	455
734-364	455
734-364/008-000	456
734-364/037-000	455
734-365	455
734-365/008-000	456
734-365/037-000	455
734-366	455
734-366/008-000	456
734-366/037-000	455
734-367	455
734-367/008-000	456
734-367/037-000	455
734-368	455
734-368/008-000	456
734-368/037-000	455
734-369	455
734-369/008-000	456
734-369/037-000	455
734-370	455
734-370/008-000	456
734-370/037-000	455
734-371	455
734-371/008-000	456
734-371/037-000	455
734-372	455
734-372/008-000	456
734-372/037-000	455
734-400	497
734-402	463
734-402/001-000	464
734-403	463
734-403/001-000	464
734-404	463
734-404/001-000	464
734-405	463
734-405/001-000	464
734-406	463
734-406/001-000	464
734-407	463
734-407/001-000	464
734-408	463
734-408/001-000	464
734-409	463
734-409/001-000	464
734-410	463
734-410/001-000	464
734-412	463
734-412/001-000	464
734-420	498
734-426	506
734-427	506
734-428	507
734-429	826
734-430	825
734-431	825
734-432	485
734-432/001-000	486
734-433	485
734-433/001-000	486
734-434	485
734-434/001-000	486
734-435	485
734-435/001-000	486
734-436	485
734-436/001-000	486
734-437	485
734-437/001-000	486
734-438	485
734-438/001-000	486
734-439	485
734-439/001-000	486
734-440	485
734-440/001-000	486
734-442	485
734-442/001-000	486
734-462	459
734-462/037-000	460
734-463	459
734-463/037-000	460
734-464	459
734-464/037-000	460
734-465	459
734-465/037-000	460
734-466	459
734-466/037-000	460
734-467	459
734-467/037-000	460
734-468	459
734-468/037-000	460
734-469	459
734-469/037-000	460
734-470	459
734-470/037-000	460
734-471	459
734-471/037-000	460
734-472	459
734-472/037-000	460
734-473	459
734-473/037-000	460
734-474	459
734-474/037-000	460
734-476	459
734-476/037-000	460
734-478	459
734-478/037-000	460
734-480	459
734-480/037-000	460
734-484	459
734-484/037-000	460
734-502	481
734-502/037-000	482
734-503	481
734-503/037-000	482
734-504	481
734-504/037-000	482
734-505	481
734-505/037-000	482
734-506	481
734-506/037-000	482
734-508	481
734-508/037-000	482
734-509	481
734-509/037-000	482
734-510	481
734-510/037-000	482
734-512	481
734-512/037-000	482
734-514	481
734-514/037-000	482
734-515	481
734-515/037-000	482
734-516	481
734-516/037-000	482
734-520	481
734-520/037-000	482
734-532	459
734-532/037-000	459
734-533	459
734-533/037-000	459
734-534	459
734-534/037-000	459
734-535	459
734-535/037-000	459
734-536	459
734-536/037-000	459
734-537	459
734-537/037-000	459
734-538	459
734-538/037-000	459
734-539	459
734-539/037-000	459
734-540	459
734-540/037-000	459
734-541	459
734-541/037-000	459
734-542	459
734-542/037-000	459
734-543	459
734-543/037-000	459
734-544	459
734-544/037-000	459
734-546	459
734-546/037-000	459
734-548	459
734-548/037-000	459
734-550	459
734-550/037-000	459
734-554	459
734-554/037-000	459
734-562/037-000	481
734-563	481
734-563/037-000	481
734-564	481
734-564/037-000	481
734-565	481
734-565/037-000	481
734-566	481
734-566/037-000	481
734-568	481
734-568/037-000	481
734-569	481
734-569/037-000	481
734-570	481
734-570/037-000	481
734-572	481
734-572/037-000	481
734-574	481
734-574/037-000	481
734-575	481
734-575/037-000	481
734-576	481
734-576/037-000	481
734-580	481
734-580/037-000	481
734-602	509
734-603	509
734-604	509
734-605	509
734-606	509
734-607	509
734-608	509
734-609	509
734-610	509
734-611	509
734-612	509
734-632	509
734-633	509
734-634	509
734-635	509
734-636	509
734-638	509
734-639	509
734-640	509
734-642	509
734-671	499
735 Series	
735-500	1088
736 Series	
736-102	59
736-103	59
736-104	59
736-106	59
736-108	59
736-112	59
736-116	59
736-124	59
736-202	59
736-203	59
736-204	59
736-206	59
736-208	59
736-212	59
736-216	59
736-224	59
736-302	63

Item Number Index

Item No.	Page
736 Series	
736-303	63
736-304	63
736-306	63
736-308	63
736-312	63
736-316	63
736-324	63
736-402	63
736-403	63
736-404	63
736-406	63
736-408	63
736-412	63
736-416	63
736-424	63
736-502	60
736-503	60
736-504	60
736-506	60
736-508	60
736-512	60
736-516	60
736-552	60
736-553	60
736-554	60
736-556	60
736-558	60
736-562	60
736-566	60
736-602	64
736-603	64
736-604	64
736-606	64
736-608	64
736-612	64
736-616	64
736-652	64
736-653	64
736-654	64
736-656	64
736-658	64
736-662	64
736-666	64
736-702	61
736-703	61
736-704	61
736-706	61
736-708	61
736-712	61
736-752	61
736-753	61
736-754	61
736-756	61
736-758	61
736-762	61
736-802	65
736-803	65
736-804	65
736-806	65
736-808	65
736-812	65
736-852	65
736-853	65
736-854	65
736-856	65
736-858	65
736-862	65
737 Series	
737-102	67
737-103	67
737-104	67
737-106	67
737-108	67
737-112	67
737-116	67
737-124	67
737-202	67
737-203	67
737-204	67

Item No.	Page
737 Series	
737-206	67
737-208	67
737-212	67
737-216	67
737-224	67
737-302	71
737-303	71
737-304	71
737-306	71
737-308	71
737-312	71
737-316	71
737-324	71
737-402	71
737-403	71
737-404	71
737-406	71
737-408	71
737-412	71
737-416	71
737-424	71
737-502	68
737-503	68
737-504	68
737-506	68
737-508	68
737-512	68
737-516	68
737-552	68
737-553	68
737-554	68
737-556	68
737-558	68
737-562	68
737-566	68
737-602	72
737-603	72
737-604	72
737-606	72
737-608	72
737-612	72
737-616	72
737-652	72
737-653	72
737-654	72
737-656	72
737-658	72
737-662	72
737-666	72
737-702	69
737-703	69
737-704	69
737-706	69
737-708	69
737-712	69
737-752	69
737-753	69
737-754	69
737-756	69
737-758	69
737-762	69
737-802	73
737-803	73
737-804	73
737-806	73
737-808	73
737-812	73
737-852	73
737-853	73
737-854	73
737-856	73
737-858	73
737-862	73
738 Series	
738-102	75
738-103	75
738-104	75
738-106	75
738-108	75

Item No.	Page
738 Series	
738-112	75
738-116	75
738-124	75
738-202	75
738-203	75
738-204	75
738-206	75
738-208	75
738-212	75
738-216	75
738-224	75
738-302	77
738-303	77
738-304	77
738-306	77
738-308	77
738-312	77
738-316	77
738-324	77
738-402	77
738-403	77
738-404	77
738-406	77
738-408	77
738-412	77
738-416	77
738-424	77
739 Series	
739-102	83
739-103	83
739-104	83
739-105	83
739-106	83
739-107	83
739-108	83
739-109	83
739-110	83
739-112	83
739-116	83
739-124	83
739-152	85
739-153	85
739-154	85
739-155	85
739-156	85
739-157	85
739-158	85
739-159	85
739-160	85
739-162	85
739-166	85
739-174	85
739-202	87
739-203	87
739-204	87
739-205	87
739-206	87
739-207	87
739-208	87
739-209	87
739-210	87
739-212	87
739-232	89
739-233	89
739-234	89
739-235	89
739-236	89
739-237	89
739-238	89
739-239	89
739-240	89
739-242	89
739-302	79
739-302/001-000	79
739-303	79
739-303/001-000	79
739-304	79
739-304/001-000	79
739-305	79

Item No.	Page
739 Series	
739-305/001-000	79
739-306	79
739-306/001-000	79
739-307	79
739-307/001-000	79
739-308	79
739-308/001-000	79
739-309	79
739-309/001-000	79
739-310	79
739-310/001-000	79
739-312	79
739-312/001-000	79
739-332	81
739-332/001-000	81
739-333	81
739-333/001-000	81
739-334	81
739-334/001-000	81
739-335	81
739-335/001-000	81
739-336	81
739-336/001-000	81
739-337	81
739-337/001-000	81
739-338	81
739-338/001-000	81
739-339	81
739-339/001-000	81
739-340	81
739-340/001-000	81
739-342	81
739-342/001-000	81
739-3202	91
739-3203	91
739-3204	91
739-3205	91
739-3206	91
739-3207	91
739-3208	91
739-3209	91
739-3210	91
739-3212	91
740 Series	
740-102	93
740-103	93
740-104	93
740-105	93
740-106	93
740-107	93
740-108	93
740-109	93
740-110	93
740-112	93
740-112/000-006	93
740-116	93
740-124	93
741 Series	
741-102	1021
741-103	1021
741-104	1021
741-105	1021
741-106	1021
741-107	1021
741-108	1021
741-109	1021
741-110	1021
741-112	1021
741-116	1021
741-132	1023
741-133	1023
741-134	1023
741-135	1023
741-136	1023
741-137	1023
741-138	1023
741-139	1023

Item Number Index

Item No.	Page
741 Series	
741-140	1023
741-142	1023
741-146	1023
741-202	1025
741-203	1025
741-204	1025
741-205	1025
741-206	1025
741-207	1025
741-208	1025
741-209	1025
741-210	1025
741-212	1025
741-216	1025
741-232	1027
741-233	1027
741-234	1027
741-235	1027
741-236	1027
741-237	1027
741-238	1027
741-239	1027
741-240	1027
741-242	1027
741-246	1027
741-302	1021
741-303	1021
741-304	1021
741-305	1021
741-306	1021
741-307	1021
741-308	1021
741-309	1021
741-310	1021
741-322	1023
741-323	1023
741-324	1023
741-325	1023
741-326	1023
741-327	1023
741-328	1023
741-329	1023
741-330	1023
741-402	1025
741-403	1025
741-404	1025
741-405	1025
741-406	1025
741-407	1025
741-408	1025
741-409	1025
741-410	1025
741-422	1027
741-423	1027
741-424	1027
741-425	1027
741-426	1027
741-427	1027
741-428	1027
741-429	1027
741-430	1027
741-502	1021
741-503	1021
741-504	1021
741-505	1021
741-506	1021
741-507	1021
741-508	1021
741-522	1023
741-523	1023
741-524	1023
741-525	1023
741-526	1023
741-527	1023
741-528	1023
741-602	1025
741-603	1025
741-604	1025
741-605	1025
741-606	1025
741-607	1025

Item No.	Page
741 Series	
741-608	1025
741-622	1027
741-623	1027
741-624	1027
741-625	1027
741-626	1027
741-627	1027
741-628	1027
742 Series	
742-100	247
742-101	247
742-106	249
742-111	255
742-116	257
742-121	251
742-124	251
742-126	253
742-128	251
742-150	247
742-151	247
742-152	247
742-153	247
742-156	249
742-158	249
742-161	255
742-163	255
742-166	257
742-168	257
742-171	251
742-174	251
742-176	253
742-178	251
742-400	251
742-450	251
742-600	249
742-650	249
742-651	249
742-800	251
742-850	251
744 Series	
744-303	240
744-303/364-000	239
744-304	240
744-304/364-000	239
744-306	240
744-306/364-000	239
744-307	240
744-307/364-000	239
744-308	240
744-308/364-000	239
744-310	240
744-310/364-000	239
744-392	240
744-392/364-000	239
745 Series	
745-100	43
745-102	45
745-103	45
745-104	45
745-105	45
745-106	45
745-107	45
745-108	45
745-109	45
745-110	45
745-112	45
745-140	43
745-145	43
745-152	45
745-153	45
745-154	45
745-155	45
745-156	45
745-157	45
745-158	45
745-159	45
745-160	45
745-162	45

Item No.	Page
745 Series	
745-180	258
745-181	258
745-182	258
745-183	258
745-184	258
745-185	258
745-190	258
745-191	258
745-192	258
745-193	258
745-194	258
745-195	258
745-202	45
745-203	45
745-204	45
745-205	45
745-206	45
745-207	45
745-208	45
745-209	45
745-210	45
745-212	45
745-280	258
745-281	258
745-283	258
745-284	258
745-285	258
745-300	49
745-302	51
745-303	51
745-304	51
745-305	51
745-306	51
745-307	51
745-308	51
745-309	51
745-310	51
745-312	51
745-338	49
745-340	49
745-345	49
745-352	51
745-353	51
745-354	51
745-355	51
745-356	51
745-357	51
745-358	51
745-359	51
745-360	51
745-362	51
745-380	258
745-381	258
745-382	258
745-383	258
745-384	258
745-385	258
745-390	258
745-391	258
745-392	258
745-393	258
745-394	258
745-395	258
745-500	53
745-502/006-000	55
745-503/006-000	55
745-504/006-000	55
745-505/006-000	55
745-540	53
745-545	53
745-582	258
745-583	258
745-584	258
745-585	258
745-602/006-000	55
745-603/006-000	55
745-604/006-000	55
745-605/006-000	55
745-631	258
745-632	258
745-633	258

Item No.	Page
745 Series	
745-634	258
745-635	258
745-652/006-000	55
745-653/006-000	55
745-654/006-000	55
745-655/006-000	55
745-681	258
745-682	258
745-683	258
745-684	258
745-685	258
745-801	43
745-803	43
745-804	43
745-807	43
745-808	43
745-811	43
745-813	43
745-814	43
745-817	43
745-818	43
745-821	43
745-823	43
745-824	43
745-827	43
745-828	43
745-831	49
745-833	49
745-834	49
745-837	49
745-838	49
745-841	49
745-843	49
745-844	49
745-847	49
745-848	49
745-851/006-000	53
745-853/006-000	53
745-854/006-000	53
745-857/006-000	53
745-858/006-000	53
745-871/006-000	53
745-873/006-000	53
745-874/006-000	53
745-877/006-000	53
745-878/006-000	53
745-881/006-000	53
745-883/006-000	53
745-884/006-000	53
745-887/006-000	53
745-888/006-000	53
745-1352	47
745-1353	47
745-1354	47
745-1355	47
745-1356	47
745-1357	47
745-1358	47
745-1359	47
745-1360	47
745-1362	47
745-1402	47
745-1403	47
745-1404	47
745-1405	47
745-1406	47
745-1407	47
745-1408	47
745-1409	47
745-1410	47
745-1412	47
745-1452	47
745-1453	47
745-1454	47
745-1455	47
745-1456	47
745-1457	47
745-1458	47
745-1459	47
745-1460	47
745-1462	47

Item Number Index

Item No.	Page
745 Series	
745-3100	37
745-3102	40
745-3103	40
745-3104	40
745-3105	40
745-3106	40
745-3107	40
745-3108	40
745-3109	40
745-3110	40
745-3111	40
745-3112	40
745-3138	37
745-3152	40
745-3153	40
745-3154	40
745-3155	40
745-3156	40
745-3157	40
745-3158	40
745-3159	40
745-3160	40
745-3161	40
745-3162	40
745-3202	40
745-3203	40
745-3204	40
745-3205	40
745-3206	40
745-3207	40
745-3208	40
745-3209	40
745-3210	40
745-3211	40
745-3212	40
745-3252	41
745-3253	41
745-3254	41
745-3255	41
745-3256	41
745-3257	41
745-3258	41
745-3259	41
745-3260	41
745-3261	41
745-3262	41
745-3801	37
745-3803	37
745-3804	37
745-3808	37
746 Series	
746-2302	145
746-2303	145
746-2304	145
746-2305	145
746-2306	145
746-2307	145
746-2308	145
746-2309	145
746-2310	145
746-2312	145
793 Series	
793-472	1065
793-501	1064
793-501/000-002	1064
793-501/000-005	1064
793-501/000-006	1064
793-501/000-007	1064
793-501/000-012	1064
793-501/000-017	1064
793-501/000-023	1064
793-501/000-024	1064
793-502	1065
793-503	1065
793-504	1065
793-505	1065
793-506	1065
793-507	1065
793-508	1065

Item No.	Page
793 Series	
793-509	1065
793-510	1065
793-511	1065
793-512	1065
793-513	1065
793-514	1065
793-515	1065
793-516	1065
793-517	1065
793-565	1065
793-566	1065
793-569	1065
793-570	1065
793-571	1065
793-572	1065
793-573	1065
793-5501	1064
793-5501/000-002	1064
793-5501/000-005	1064
793-5501/000-006	1064
793-5501/000-007	1064
793-5501/000-012	1064
793-5501/000-017	1064
793-5501/000-023	1064
793-5501/000-024	1064
804 Series	
804-102	197
804-103	197
804-104	197
804-105	197
804-106	197
804-107	197
804-108	197
804-109	197
804-110	197
804-111	197
804-112	197
804-113	197
804-114	197
804-115	197
804-116	197
804-302	197
804-303	197
804-304	197
804-305	197
804-306	197
804-307	197
804-308	197
804-309	197
804-310	197
804-311	197
804-312	197
805 Series	
805-102	194
805-103	194
805-104	194
805-105	194
805-106	194
805-107	194
805-108	194
805-109	194
805-110	194
805-111	194
805-112	194
805-113	194
805-114	194
805-115	194
805-116	194
805-117	194
805-118	194
805-119	194
805-120	194
805-121	194
805-122	194
805-123	194
805-124	194
805-152	191
805-153	191

Item No.	Page
805 Series	
805-154	191
805-155	191
805-156	191
805-157	191
805-158	191
805-159	191
805-160	191
805-161	191
805-162	191
805-163	191
805-164	191
805-165	191
805-166	191
805-167	191
805-168	191
805-169	191
805-170	191
805-171	191
805-172	191
805-173	191
805-174	191
805-302	193
805-302/200-604	341
805-303	193
805-303/200-604	341
805-304	193
805-304/200-604	341
805-305	193
805-305/200-604	341
805-306	193
805-306/200-604	341
805-306/200-604/997-406	341
805-307	193
805-307/200-604	341
805-307/200-604/997-406	341
805-308	193
805-308/200-604	341
805-308/200-604/997-406	341
805-309	193
805-310	193
805-311	193
805-312	193
805-313	193
805-314	193
805-315	193
805-316	193
805-317	193
805-318	193
805-319	193
805-320	193
805-321	193
805-322	193
805-323	193
805-324	193
805-352	191
805-353	191
805-354	191
805-355	191
805-356	191
805-357	191
805-358	191
805-359	191
805-360	191
805-361	191
805-362	191
805-363	191
805-364	191
805-365	191
805-366	191
805-367	191
805-368	191
805-369	191
805-370	191
805-371	191
805-372	191
805-373	191
805-374	191
806 Series	
806-102	1001

Item No.	Page
806 Series	
806-103	1001
806-104	1001
806-105	1001
806-106	1001
806-107	1001
806-108	1001
806-109	1001
806-110	1001
806-111	1001
806-112	1001
806-202	1001
806-203	1001
806-204	1001
806-205	1001
806-206	1001
806-207	1001
806-208	1001
806-209	1001
806-210	1001
806-211	1001
806-212	1001
806-902	1001
806-903	1001
806-904	1001
806-905	1001
806-906	1001
806-907	1001
806-908	1001
806-909	1001
806-910	1001
806-911	1001
806-912	1001
816 Series	
816-102	143
816-103	143
816-104	143
816-105	143
816-106	143
816-107	143
816-108	143
816-109	143
816-110	143
816-111	143
816-112	143
826 Series	
826-155	1009
826-156	1009
826-157	1009
826-158	1009
826-158/000-006	1009
826-158/000-016	1009
826-159	1009
826-159/000-006	1009
826-159/000-016	1009
826-160	1009
826-160/000-006	1009
826-160/000-016	1009
826-161	1010
826-162	1010
826-163	1010
826-164	1010
826-165	1010
826-166	1010
826-167	1010
826-168	1010
826-169	1010
826-170	1010
826-171	1010
826-172	1010
828 Series	
828-264/313-000	1019
828-334	1019
831 Series	
831-137	875
831-302	876
831-303	876

Item Number Index

Item No.	Page
831 Series	
831-304	876
831-305	876
831-321	876
831-500	874
831-503	877
831-505	877
831-506	877
831-1032	875
831-1038	875
831-1102	847
831-1102/037-000	847
831-1102/038-000	847
831-1102/038-000/306-000	849
831-1102/306-000	848
831-1102/322-000	848
831-1103	847
831-1103/037-000	847
831-1103/038-000	847
831-1103/038-000/306-000	849
831-1103/306-000	848
831-1103/320-000	848
831-1103/322-000	848
831-1104	847
831-1104/037-000	847
831-1104/038-000	847
831-1104/038-000/306-000	849
831-1104/306-000	848
831-1104/320-000	848
831-1104/322-000	848
831-1105	847
831-1105/037-000	847
831-1105/038-000	847
831-1105/038-000/306-000	849
831-1105/306-000	848
831-1105/320-000	848
831-1105/322-000	848
831-1106	847
831-1106/037-000	847
831-1106/038-000	847
831-1106/038-000/306-000	849
831-1106/306-000	848
831-1106/322-000	848
831-1107	847
831-1107/037-000	847
831-1107/038-000	847
831-1107/038-000/306-000	849
831-1107/306-000	848
831-1107/322-000	848
831-1108	847
831-1108/037-000	847
831-1108/038-000	847
831-1108/038-000/306-000	849
831-1108/306-000	848
831-1108/322-000	848
831-1109	847
831-1109/037-000	847
831-1109/038-000	847
831-1109/038-000/306-000	849
831-1109/306-000	848
831-1109/322-000	848
831-1202	853
831-1202/306-000	853
831-1203	853
831-1203/306-000	853
831-1204	853
831-1204/306-000	853
831-1205	853
831-1205/306-000	853
831-1206	853
831-1206/306-000	853
831-1207	853
831-1207/306-000	853
831-1208	853
831-1208/306-000	853
831-1209	853
831-1209/306-000	853
831-3102	845
831-3102/037-000	845
831-3102/107-000	845
831-3103	845
831-3103/037-000	845

Item No.	Page
831 Series	
831-3103/107-000	845
831-3104	845
831-3104/037-000	845
831-3104/107-000	845
831-3105	845
831-3105/037-000	845
831-3105/107-000	845
831-3106	845
831-3106/037-000	845
831-3106/107-000	845
831-3107	845
831-3107/037-000	845
831-3108	845
831-3108/037-000	845
831-3108/107-000	845
831-3109	845
831-3109/037-000	845
831-3109/107-000	845
831-3202	851
831-3202/007-000	851
831-3202/109-000	851
831-3203	851
831-3203/007-000	851
831-3203/109-000	851
831-3204	851
831-3204/007-000	851
831-3204/109-000	851
831-3205	851
831-3205/007-000	851
831-3205/109-000	851
831-3206	851
831-3206/007-000	851
831-3206/109-000	851
831-3207	851
831-3207/007-000	851
831-3207/109-000	851
831-3208	851
831-3208/007-000	851
831-3208/109-000	851
831-3209	851
831-3209/007-000	851
831-3209/109-000	851
831-3502	855
831-3503	855
831-3504	855
831-3505	855
831-3506	855
831-3507	855
831-3508	855
831-3509	855
831-3522	855
831-3523	855
831-3524	855
831-3525	855
831-3526	855
831-3527	855
831-3528	855
831-3529	855
831-3602	857
831-3602/108-000	858
831-3603	857
831-3603/108-000	858
831-3604	857
831-3604/108-000	858
831-3605	857
831-3605/108-000	858
831-3606	857
831-3606/108-000	858
831-3607	857
831-3607/108-000	858
831-3608	857
831-3608/108-000	858
831-3609	857
831-3609/108-000	858
831-3622	857
831-3622/108-000	858
831-3623	857
831-3623/108-000	858
831-3624	857
831-3624/108-000	858
831-3625	857

Item No.	Page
831 Series	
831-3625/108-000	858
831-3626	857
831-3626/108-000	858
831-3627	857
831-3627/108-000	858
831-3628	857
831-3628/108-000	858
831-3629	857
831-3629/108-000	858
831-3642	857
831-3643	857
831-3644	857
831-3645	857
831-3646	857
831-3647	857
831-3648	857
831-3649	857
832 Series	
832-500	878
832-532	880
832-533	880
832-534	880
832-535	880
832-542	881
832-543	881
832-544	881
832-545	881
832-1032	879
832-1038	879
832-1101/011-000	861
832-1101/011-000/037-000	861
832-1102	862
832-1102/037-000	862
832-1102/037-000/306-000	863
832-1102/306-000	863
832-1102/320-000	863
832-1102/322-000	862
832-1103	862
832-1103/037-000	862
832-1103/037-000/306-000	863
832-1103/306-000	863
832-1103/320-000	863
832-1103/323-000	862
832-1104	862
832-1104/037-000	862
832-1104/037-000/306-000	863
832-1104/306-000	863
832-1104/320-000	863
832-1104/322-000	862
832-1105	862
832-1105/037-000	862
832-1105/037-000/306-000	863
832-1105/306-000	863
832-1105/320-000	863
832-1105/323-000	862
832-1106	862
832-1106/037-000	862
832-1106/037-000/306-000	863
832-1106/306-000	863
832-1106/320-000	863
832-1106/322-000	862
832-1201/011-000	867
832-1202	868
832-1202/306-000	868
832-1203	868
832-1203/306-000	868
832-1204	868
832-1204/306-000	868
832-1205	868
832-1205/306-000	868
832-1206	868
832-1206/306-000	868
832-3602	871
832-3603	871
832-3604	871
832-3605	871
832-3606	871
832-3622	871
832-3623	871

Item No.	Page
832 Series	
832-3624	871
832-3625	871
832-3626	871
832-3642	871
832-3643	871
832-3644	871
832-3645	871
832-3646	871
859 Series	
859-402	1055
859-500	1088
2009 Series	
2009-115	1064
2009-145	1064
2059 Series	
2059-189	392
2059-301/998-403	355
2059-302/998-403	357
2059-303/998-403	357
2059-321/998-403	355
2059-322/998-403	357
2059-323/998-403	357
2059-901	399
2059-901/018-000	399
2059-901/021-000	399
2059-902	399
2059-902/018-000	399
2059-902/021-000	399
2059-903	399
2059-903/018-000	399
2059-903/021-000	399
2060 Series	
2060-189	348
2060-451/998-404	359
2060-452/998-404	361
2060-453/998-404	361
2060-471/998-404	359
2060-472/998-404	361
2060-473/998-404	361
2060-852/998-404	363
2060-872/998-404	363
2060-951/028-000	403
2060-952/028-000	403
2060-953/028-000	403
2060-962/028-000	404
2060-1451/998-404	281
2060-1452/998-404	283
2060-1453/998-404	283
2060-1471/998-404	281
2060-1472/998-404	283
2060-1473/998-404	283
2060-1852/998-404	285
2060-1872/998-404	285
2061 Series	
2061-190	349
2061-601/998-404	365
2061-602/998-404	367
2061-603/998-404	367
2061-621/998-404	365
2061-622/998-404	367
2061-623/998-404	367
2061-901	407
2061-901/034-000	407
2061-902	407
2061-902/034-000	407
2061-903	407
2061-903/034-000	407
2061-1601/998-404	291
2061-1602/998-404	293
2061-1603/998-404	293
2061-1621/998-404	291
2061-1622/998-404	293
2061-1623/998-404	293
2061-1641/998-404	287
2061-1642/998-404	289

Item Number Index

Item No.	Page
2061 Series	
2061-1643/998-404	289
2061-1661/998-404	287
2061-1662/998-404	289
2061-1663/998-404	289
2065 Series	
2065-100/998-403	371
2065-101/998-403	369
2065-131	411
2065-133	411
2065-189	395
2070 Series	
2070-400	396
2070-451/998-406	375
2070-452/998-406	375
2070-453/998-406	375
2070-461/998-406	376
2070-462/998-406	376
2070-463/998-406	376
2070-521/998-406	377
2070-522/998-406	377
2070-523/998-406	377
2070-541/998-406	378
2070-542/998-406	378
2070-543/998-406	378
2075 Series	
2075-381/997-404	373
2086 Series	
2086-1102	296
2086-1102/300-000	295
2086-1102/300-000/997-604	304
2086-1102/700-000/997-604	382
2086-1102/700-650/997-604	384
2086-1102/997-604	306
2086-1103	296
2086-1103/300-000	295
2086-1103/300-000/997-605	304
2086-1103/700-000/997-605	382
2086-1103/700-650/997-605	384
2086-1103/997-605	306
2086-1104	296
2086-1104/300-000	295
2086-1104/300-000/997-605	304
2086-1104/700-000/997-605	382
2086-1104/700-650/997-605	384
2086-1104/997-605	306
2086-1105	296
2086-1105/300-000	295
2086-1105/300-000/997-605	304
2086-1105/700-000/997-605	382
2086-1105/700-650/997-605	384
2086-1105/997-605	306
2086-1106	296
2086-1106/300-000	295
2086-1106/300-000/997-607	304
2086-1106/700-000/997-607	382
2086-1106/700-650/997-607	384
2086-1106/997-607	306
2086-1107	296
2086-1107/300-000	295
2086-1107/300-000/997-607	304
2086-1107/700-000/997-607	382
2086-1107/700-650/997-607	384
2086-1107/997-607	306
2086-1108	296
2086-1108/300-000	295
2086-1108/300-000/997-607	304
2086-1108/700-000/997-607	382
2086-1108/700-650/997-607	384
2086-1108/997-607	306
2086-1109	296
2086-1109/300-000	295
2086-1109/300-000/997-607	304
2086-1109/700-000/997-607	382
2086-1109/700-650/997-607	384

Item No.	Page
2086 Series	
2086-1109/997-607	306
2086-1110	296
2086-1110/300-000	295
2086-1110/300-000/997-607	304
2086-1110/700-000/997-607	382
2086-1110/700-650/997-607	384
2086-1110/997-607	306
2086-1111	296
2086-1111/300-000	295
2086-1111/300-000/997-607	304
2086-1111/700-000/997-607	382
2086-1111/700-650/997-607	384
2086-1111/997-607	306
2086-1112	296
2086-1112/300-000	295
2086-1112/300-000/997-607	304
2086-1112/700-000/997-607	382
2086-1112/700-650/997-607	384
2086-1112/997-607	306
2086-1122	300
2086-1122/300-000	299
2086-1122/300-000/997-604	310
2086-1122/997-604	312
2086-1123	300
2086-1123/300-000	299
2086-1123/300-000/997-605	310
2086-1123/997-605	312
2086-1124	300
2086-1124/300-000	299
2086-1124/300-000/997-605	310
2086-1124/997-605	312
2086-1125	300
2086-1125/300-000	299
2086-1125/300-000/997-605	310
2086-1125/997-605	312
2086-1126	300
2086-1126/300-000	299
2086-1126/300-000/997-607	310
2086-1126/997-607	312
2086-1127	300
2086-1127/300-000	299
2086-1127/300-000/997-607	310
2086-1127/997-607	312
2086-1128	300
2086-1128/300-000	299
2086-1128/300-000/997-607	310
2086-1128/997-607	312
2086-1129	300
2086-1129/300-000	299
2086-1129/300-000/997-607	310
2086-1129/997-607	312
2086-1130	300
2086-1130/300-000	299
2086-1130/300-000/997-607	310
2086-1130/997-607	312
2086-1131	300
2086-1131/300-000	299
2086-1131/300-000/997-607	310
2086-1131/997-607	312
2086-1132	300
2086-1132/300-000	299
2086-1132/300-000/997-607	310
2086-1132/997-607	312
2086-1202	296
2086-1202/300-000	295
2086-1202/300-000/997-604	303
2086-1202/700-000/997-604	381
2086-1202/700-650/997-604	383
2086-1202/997-604	305
2086-1203	296
2086-1203/300-000	295
2086-1203/300-000/997-605	303
2086-1203/700-000/997-605	381
2086-1203/700-650/997-605	383
2086-1203/997-605	305
2086-1204	296
2086-1204/300-000	295
2086-1204/300-000/997-605	303
2086-1204/700-000/997-605	381
2086-1204/700-650/997-605	383
2086-1204/997-605	305

Item No.	Page
2086 Series	
2086-1205	296
2086-1205/300-000	295
2086-1205/300-000/997-605	303
2086-1205/700-000/997-605	381
2086-1205/700-650/997-605	383
2086-1205/997-605	305
2086-1206	296
2086-1206/300-000	295
2086-1206/300-000/997-607	303
2086-1206/700-000/997-607	381
2086-1206/700-650/997-607	383
2086-1206/997-607	305
2086-1207	296
2086-1207/300-000	295
2086-1207/300-000/997-607	303
2086-1207/700-000/997-607	381
2086-1207/700-650/997-607	383
2086-1207/997-607	305
2086-1208	296
2086-1208/300-000	295
2086-1208/300-000/997-607	303
2086-1208/700-000/997-607	381
2086-1208/700-650/997-607	383
2086-1208/997-607	305
2086-1209	296
2086-1209/300-000	295
2086-1209/300-000/997-607	303
2086-1209/700-000/997-607	381
2086-1209/700-650/997-607	383
2086-1209/997-607	305
2086-1210	296
2086-1210/300-000	295
2086-1210/300-000/997-607	303
2086-1210/700-000/997-607	381
2086-1210/700-650/997-607	383
2086-1210/997-607	305
2086-1211	296
2086-1211/300-000	295
2086-1211/300-000/997-607	303
2086-1211/700-000/997-607	381
2086-1211/700-650/997-607	383
2086-1211/997-607	305
2086-1212	296
2086-1212/300-000	295
2086-1212/300-000/997-607	303
2086-1212/700-000/997-607	381
2086-1212/700-650/997-607	383
2086-1212/997-607	305
2086-1222	300
2086-1222/300-000	299
2086-1222/300-000/997-604	309
2086-1222/997-604	311
2086-1223	300
2086-1223/300-000	299
2086-1223/300-000/997-605	309
2086-1223/997-605	311
2086-1224	300
2086-1224/300-000	299
2086-1224/300-000/997-605	309
2086-1224/997-605	311
2086-1225	300
2086-1225/300-000	299
2086-1225/300-000/997-605	309
2086-1225/997-605	311
2086-1226	300
2086-1226/300-000	299
2086-1226/300-000/997-607	309
2086-1226/997-607	311
2086-1227	300
2086-1227/300-000	299
2086-1227/300-000/997-607	309
2086-1227/997-607	311
2086-1228	300
2086-1228/300-000	299
2086-1228/300-000/997-607	309
2086-1228/997-607	311
2086-1229	300
2086-1229/300-000	299
2086-1229/300-000/997-607	309
2086-1229/997-607	311
2086-1230	300

Item No.	Page
2086 Series	
2086-1230/300-000	299
2086-1230/300-000/997-607	309
2086-1230/997-607	311
2086-1231	300
2086-1231/300-000	299
2086-1231/300-000/997-607	309
2086-1231/997-607	311
2086-1232	300
2086-1232/300-000	299
2086-1232/300-000/997-607	309
2086-1232/997-607	311
2086-3102	316
2086-3102/300-000	315
2086-3102/300-000/997-604	324
2086-3102/700-000/997-604	388
2086-3102/700-650/997-604	390
2086-3102/997-604	326
2086-3103	316
2086-3103/300-000	315
2086-3103/300-000/997-605	324
2086-3103/700-000/997-605	388
2086-3103/700-650/997-605	390
2086-3103/997-605	326
2086-3104	316
2086-3104/300-000	315
2086-3104/300-000/997-605	324
2086-3104/700-000/997-605	388
2086-3104/700-650/997-605	390
2086-3104/997-605	326
2086-3105	316
2086-3105/300-000	315
2086-3105/300-000/997-607	324
2086-3105/700-000/997-607	388
2086-3105/700-650/997-607	390
2086-3105/997-607	326
2086-3106	316
2086-3106/300-000	315
2086-3106/300-000/997-607	324
2086-3106/700-000/997-607	388
2086-3106/700-650/997-607	390
2086-3106/997-607	326
2086-3107	316
2086-3107/300-000	315
2086-3107/300-000/997-607	324
2086-3107/700-000/997-607	388
2086-3107/700-650/997-607	390
2086-3107/997-607	326
2086-3108	316
2086-3108/300-000	315
2086-3108/300-000/997-607	324
2086-3108/700-000/997-607	388
2086-3108/700-650/997-607	390
2086-3108/997-607	326
2086-3122	320
2086-3122/300-000	319
2086-3122/300-000/997-604	330
2086-3122/997-604	332
2086-3123	320
2086-3123/300-000	319
2086-3123/300-000/997-605	330
2086-3123/997-605	332
2086-3124	320
2086-3124/300-000	319
2086-3124/300-000/997-605	330
2086-3124/997-605	332
2086-3125	320
2086-3125/300-000	319
2086-3125/300-000/997-607	330
2086-3125/997-607	332
2086-3126	320
2086-3126/300-000	319
2086-3126/300-000/997-607	330
2086-3126/997-607	332
2086-3127	320
2086-3127/300-000	319
2086-3127/300-000/997-607	330
2086-3127/997-607	332
2086-3128	320
2086-3128/300-000	319
2086-3128/300-000/997-607	330
2086-3128/997-607	332

Item Number Index

Item No.	Page
2086 Series	
2086-3202	316
2086-3202/300-000	315
2086-3202/300-000/997-604	323
2086-3202/700-000/997-604	387
2086-3202/700-650/997-604	389
2086-3202/997-604	325
2086-3203	316
2086-3203/300-000	315
2086-3203/300-000/997-605	323
2086-3203/700-000/997-605	387
2086-3203/700-650/997-605	389
2086-3203/997-605	325
2086-3204	316
2086-3204/300-000	315
2086-3204/300-000/997-605	323
2086-3204/700-000/997-605	387
2086-3204/700-650/997-605	389
2086-3204/997-605	325
2086-3205	316
2086-3205/300-000	315
2086-3205/300-000/997-607	323
2086-3205/700-000/997-607	387
2086-3205/700-650/997-607	389
2086-3205/997-607	325
2086-3206	316
2086-3206/300-000	315
2086-3206/300-000/997-607	323
2086-3206/700-000/997-607	387
2086-3206/700-650/997-607	389
2086-3206/997-607	325
2086-3207	316
2086-3207/300-000	315
2086-3207/300-000/997-607	323
2086-3207/700-000/997-607	387
2086-3207/700-650/997-607	389
2086-3207/997-607	325
2086-3208	316
2086-3208/300-000	315
2086-3208/300-000/997-607	323
2086-3208/700-000/997-607	387
2086-3208/700-650/997-607	389
2086-3208/997-607	325
2086-3222	320
2086-3222/300-000	319
2086-3222/300-000/997-604	329
2086-3222/997-604	331
2086-3223	320
2086-3223/300-000	319
2086-3224	320
2086-3224/300-000	319
2086-3225	320
2086-3225/300-000	319
2086-3225/300-000/997-607	329
2086-3225/997-607	331
2086-3226	320
2086-3226/300-000	319
2086-3226/300-000/997-607	329
2086-3226/997-607	331
2086-3227	320
2086-3227/300-000	319
2086-3227/300-000/997-607	329
2086-3227/997-607	331
2086-3228	320
2086-3228/300-000	319
2086-3228/300-000/997-607	329
2086-3228/997-607	331
2091 Series	
2091-1102	889
2091-1102/002-000	888
2091-1103	889
2091-1103/002-000	888
2091-1104	889
2091-1104/002-000	888
2091-1105	889
2091-1105/002-000	888
2091-1106	889
2091-1106/002-000	888
2091-1107	889
2091-1107/002-000	888
2091-1108	889

Item No.	Page
2091 Series	
2091-1108/002-000	888
2091-1110	889
2091-1110/002-000	888
2091-1112	889
2091-1112/002-000	888
2091-1122	887
2091-1123	887
2091-1124	887
2091-1125	887
2091-1126	887
2091-1127	887
2091-1128	887
2091-1130	887
2091-1132	887
2091-1152	971
2091-1153	971
2091-1154	971
2091-1155	971
2091-1156	971
2091-1157	971
2091-1158	971
2091-1160	971
2091-1162	971
2091-1172	969
2091-1173	969
2091-1174	969
2091-1175	969
2091-1176	969
2091-1177	969
2091-1178	969
2091-1180	969
2091-1182	969
2091-1302	893
2091-1302/200-000	903
2091-1304	893
2091-1304/200-000	903
2091-1306	893
2091-1306/200-000	903
2091-1308	893
2091-1308/200-000	903
2091-1322	893
2091-1322/200-000	903
2091-1324	893
2091-1324/200-000	903
2091-1326	893
2091-1326/200-000	903
2091-1328	893
2091-1328/200-000	903
2091-1352	971
2091-1353	971
2091-1354	971
2091-1355	971
2091-1356	971
2091-1357	971
2091-1358	971
2091-1360	971
2091-1362	971
2091-1372	969
2091-1373	969
2091-1374	969
2091-1375	969
2091-1376	969
2091-1377	969
2091-1378	969
2091-1380	969
2091-1382	969
2091-1402	895
2091-1402/005-000	896
2091-1402/200-000	906
2091-1402/205-000	907
2091-1403	895
2091-1403/005-000	896
2091-1403/200-000	906
2091-1403/205-000	907
2091-1404	895
2091-1404/005-000	896
2091-1404/200-000	906
2091-1404/205-000	907
2091-1405	895
2091-1405/005-000	896
2091-1405/200-000	906

Item No.	Page
2091 Series	
2091-1405/205-000	907
2091-1406	895
2091-1406/005-000	896
2091-1406/200-000	906
2091-1406/205-000	907
2091-1407	895
2091-1407/200-000	906
2091-1408	895
2091-1408/005-000	896
2091-1408/200-000	906
2091-1408/205-000	907
2091-1410	895
2091-1410/005-000	896
2091-1410/200-000	906
2091-1410/205-000	907
2091-1412	895
2091-1412/200-000	906
2091-1412/205-000	907
2091-1422	895
2091-1422/005-000	896
2091-1422/200-000	905
2091-1422/200-000/997-405	905
2091-1422/200-604	905
2091-1422/205-000	907
2091-1423	895
2091-1423/005-000	896
2091-1423/200-000	905
2091-1423/200-000/997-406	905
2091-1423/205-000	907
2091-1424	895
2091-1424/005-000	896
2091-1424/200-000	905
2091-1424/200-000/997-406	905
2091-1424/200-604	905
2091-1424/205-000	907
2091-1425	895
2091-1425/005-000	896
2091-1425/200-000	905
2091-1425/200-000/997-406	905
2091-1425/205-000	907
2091-1426	895
2091-1426/005-000	896
2091-1426/200-000	905
2091-1426/200-000/997-406	905
2091-1426/200-604	905
2091-1426/205-000	907
2091-1427	895
2091-1427/200-000	905
2091-1427/200-000/997-406	905
2091-1428	895
2091-1428/005-000	896
2091-1428/200-000	905
2091-1428/200-000/997-406	905
2091-1428/205-000	907
2091-1430	895
2091-1430/005-000	896
2091-1430/200-000	905
2091-1430/200-000/997-408	905
2091-1430/200-604	905
2091-1430/205-000	907
2091-1432	895
2091-1432/200-000	905
2091-1432/200-000/997-408	905
2091-1432/205-000	907
2091-1502/002-000	891
2091-1503/002-000	891
2091-1504/002-000	891
2091-1505/002-000	891
2091-1506/002-000	891
2091-1508/002-000	891
2091-1510/002-000	891
2091-1512/002-000	891
2091-1522/002-000	891
2091-1522/020-000	891
2091-1523/002-000	891
2091-1523/020-000	891
2091-1524/002-000	891
2091-1524/020-000	891
2091-1525/002-000	891
2091-1525/020-000	891
2091-1526/002-000	891

Item No.	Page
2091 Series	
2091-1526/020-000	891
2091-1528/002-000	891
2091-1528/020-000	891
2091-1530/002-000	891
2091-1530/020-000	891
2091-1532/002-000	891
2091-1532/020-000	891
2091-1600	962
2091-1600/002-000	963
2091-1601	962
2091-1601/002-000	963
2091-1602	962
2091-1602/002-000	963
2091-1603	962
2091-1603/002-000	963
2091-1610	961
2091-1632/024-000	911
2091-1634/024-000	911
2091-1636/024-000	911
2091-1638/024-000	911
2091-1702	899
2091-1702/200-000	909
2091-1703	899
2091-1703/200-000	909
2091-1704	899
2091-1704/200-000	909
2091-1705	899
2091-1705/200-000	909
2091-1706	899
2091-1706/200-000	909
2091-1707	899
2091-1707/200-000	909
2091-1708	899
2091-1708/200-000	909
2091-1710	899
2091-1710/200-000	909
2091-1712	899
2091-1712/200-000	909
2091-1722	899
2091-1722/200-000	909
2091-1723	899
2091-1723/200-000	909
2091-1724	899
2091-1725	899
2091-1725/200-000	909
2091-1726	899
2091-1726/200-000	909
2091-1727	899
2091-1727/200-000	909
2091-1728	899
2091-1728/200-000	909
2091-1730	899
2091-1730/200-000	909
2091-1732	899
2091-1732/200-000	909
2091-2172/200-000	974
2091-2172/200-000/997-404	974
2091-2173/200-000	974
2091-2173/200-000/997-404	974
2091-2174/200-000	974
2091-2174/200-000/997-405	974
2091-2175/200-000	974
2091-2175/200-000/997-405	974
2091-2176/200-000	974
2091-2176/200-000/997-407	974
2091-2177/200-000	974
2091-2177/200-000/997-407	974
2091-2178/200-000	974
2091-2178/200-000/997-407	974
2091-2180/200-000	974
2091-2180/200-000/997-407	974
2091-2182/200-000	974
2091-2182/200-000/997-407	974
2091-2372/200-000	973
2091-2372/200-000/997-404	973
2091-2373/200-000	973
2091-2373/200-000/997-404	973
2091-2374/200-000	973
2091-2374/200-000/997-404	973
2091-2375/200-000	973
2091-2375/200-000/997-406	973

Item Number Index

Item No.	Page
2091 Series	
2091-2376/200-000	973
2091-2376/200-000/997-406	973
2091-2377/200-000	973
2091-2377/200-000/997-406	973
2091-2378/200-000	973
2091-2378/200-000/997-406	973
2091-2380/200-000	973
2091-2380/200-000/997-407	973
2091-2382/200-000	973
2091-2382/200-000/997-407	973
2092 Series	
2092-1102	915
2092-1102/002-000	914
2092-1103	915
2092-1103/002-000	914
2092-1104	915
2092-1104/002-000	914
2092-1105	915
2092-1105/002-000	914
2092-1106	915
2092-1106/002-000	914
2092-1107	915
2092-1107/002-000	914
2092-1108	915
2092-1108/002-000	914
2092-1109	915
2092-1109/002-000	914
2092-1110	915
2092-1110/002-000	914
2092-1112	915
2092-1112/002-000	914
2092-1122	913
2092-1123	913
2092-1124	913
2092-1125	913
2092-1126	913
2092-1127	913
2092-1128	913
2092-1129	913
2092-1130	913
2092-1132	913
2092-1152	979
2092-1153	979
2092-1154	979
2092-1155	979
2092-1156	979
2092-1157	979
2092-1158	979
2092-1159	979
2092-1160	979
2092-1162	979
2092-1172	977
2092-1173	977
2092-1174	977
2092-1175	977
2092-1176	977
2092-1177	977
2092-1178	977
2092-1179	977
2092-1180	977
2092-1182	977
2092-1302	919
2092-1302/200-000	927
2092-1303	919
2092-1303/200-000	927
2092-1304	919
2092-1304/200-000	927
2092-1305	919
2092-1305/200-000	927
2092-1306	919
2092-1306/200-000	927
2092-1322	919
2092-1322/200-000	927
2092-1323	919
2092-1323/200-000	927
2092-1324	919
2092-1324/200-000	927
2092-1325	919
2092-1325/200-000	927
2092-1326	919

Item No.	Page
2092 Series	
2092-1326/200-000	927
2092-1352	979
2092-1353	979
2092-1354	979
2092-1355	979
2092-1356	979
2092-1357	979
2092-1358	979
2092-1359	979
2092-1360	979
2092-1362	979
2092-1372	977
2092-1373	977
2092-1374	977
2092-1375	977
2092-1376	977
2092-1377	977
2092-1378	977
2092-1379	977
2092-1380	977
2092-1382	977
2092-1402	921
2092-1402/005-000	922
2092-1402/200-000	929
2092-1402/205-000	930
2092-1403	921
2092-1403/005-000	922
2092-1403/200-000	929
2092-1403/205-000	930
2092-1404	921
2092-1404/005-000	922
2092-1404/200-000	929
2092-1404/205-000	930
2092-1405	921
2092-1405/005-000	922
2092-1405/200-000	929
2092-1405/205-000	930
2092-1406	921
2092-1406/005-000	922
2092-1406/200-000	929
2092-1407	921
2092-1408	921
2092-1408/005-000	922
2092-1408/200-000	929
2092-1409	921
2092-1410	921
2092-1410/005-000	922
2092-1410/200-000	929
2092-1412	921
2092-1412/005-000	922
2092-1412/200-000	929
2092-1422	921
2092-1422/005-000	922
2092-1422/200-000	929
2092-1422/205-000	930
2092-1423	921
2092-1423/005-000	922
2092-1423/200-000	929
2092-1423/205-000	930
2092-1424	921
2092-1424/005-000	922
2092-1424/200-000	929
2092-1424/205-000	930
2092-1425	921
2092-1425/005-000	922
2092-1425/200-000	929
2092-1425/205-000	930
2092-1426	921
2092-1426/005-000	922
2092-1426/200-000	929
2092-1427	921
2092-1427/200-000	929
2092-1428	921
2092-1428/005-000	922
2092-1428/200-000	929
2092-1429	921
2092-1429/200-000	929
2092-1430	921
2092-1430/005-000	922
2092-1430/200-000	929
2092-1432	921

Item No.	Page
2092 Series	
2092-1432/005-000	922
2092-1432/200-000	929
2092-1502/002-000	917
2092-1503/002-000	917
2092-1504/002-000	917
2092-1505/002-000	917
2092-1506/002-000	917
2092-1522/002-000	917
2092-1522/020-000	917
2092-1523/002-000	917
2092-1523/020-000	917
2092-1524/002-000	917
2092-1524/020-000	917
2092-1525/002-000	917
2092-1525/020-000	917
2092-1526/002-000	917
2092-1526/020-000	917
2092-1600	962
2092-1600/002-000	963
2092-1601	962
2092-1601/002-000	963
2092-1602	962
2092-1602/002-000	963
2092-1603	962
2092-1603/002-000	963
2092-1610	961
2092-1630	960
2092-1632/024-000	935
2092-1633/024-000	935
2092-1634/024-000	935
2092-1635/024-000	935
2092-1636/024-000	935
2092-1702	925
2092-1702/200-000	933
2092-1703	925
2092-1703/200-000	933
2092-1704	925
2092-1704/200-000	933
2092-1705	925
2092-1705/200-000	933
2092-1706	925
2092-1706/200-000	933
2092-1707	925
2092-1707/200-000	933
2092-1708	925
2092-1708/200-000	933
2092-1709	925
2092-1709/200-000	933
2092-1710	925
2092-1710/200-000	933
2092-1712	925
2092-1712/200-000	933
2092-1722	925
2092-1722/200-000	933
2092-1723	925
2092-1723/200-000	933
2092-1724	925
2092-1724/200-000	933
2092-1725	925
2092-1725/200-000	933
2092-1726	925
2092-1726/200-000	933
2092-1727	925
2092-1727/200-000	933
2092-1728	925
2092-1728/200-000	933
2092-1729	925
2092-1729/200-000	933
2092-1730	925
2092-1730/200-000	933
2092-1732	925
2092-1732/200-000	933
2092-2172/200-000	982
2092-2172/200-000/997-405	982
2092-2173/200-000	982
2092-2173/200-000/997-406	982
2092-2174/200-000	982
2092-2174/200-000/997-406	982
2092-2175/200-000	982
2092-2175/200-000/997-407	982
2092-2176/200-000	982

Item No.	Page
2092 Series	
2092-2176/200-000/997-407	982
2092-2177/200-000	982
2092-2177/200-000/997-407	982
2092-2178/200-000	982
2092-2178/200-000/997-407	982
2092-2179/200-000	982
2092-2179/200-000/997-409	982
2092-2180/200-000	982
2092-2180/200-000/997-409	982
2092-2182/200-000	982
2092-2182/200-000/997-409	982
2092-2372/200-000	981
2092-2372/200-000/997-404	981
2092-2373/200-000	981
2092-2373/200-000/997-405	981
2092-2374/200-000	981
2092-2374/200-000/997-405	981
2092-2375/200-000	981
2092-2375/200-000/997-407	981
2092-2376/200-000	981
2092-2376/200-000/997-407	981
2092-2377/200-000	981
2092-2377/200-000/997-407	981
2092-2378/200-000	981
2092-2378/200-000/997-407	981
2092-2379/200-000	981
2092-2379/200-000/997-409	981
2092-2380/200-000	981
2092-2380/200-000/997-409	981
2092-2382/200-000	981
2092-2382/200-000/997-409	981
2092-3102	939
2092-3102/002-000	938
2092-3103	939
2092-3103/002-000	938
2092-3104	939
2092-3104/002-000	938
2092-3105	939
2092-3105/002-000	938
2092-3122	937
2092-3123	937
2092-3124	937
2092-3125	937
2092-3152	987
2092-3153	987
2092-3154	987
2092-3155	987
2092-3172	985
2092-3173	985
2092-3174	985
2092-3175	985
2092-3302	943
2092-3302/200-000	951
2092-3303	943
2092-3303/200-000	951
2092-3304	943
2092-3304/200-000	951
2092-3305/200-000	951
2092-3322	943
2092-3322/200-000	951
2092-3323	943
2092-3323/200-000	951
2092-3324	943
2092-3324/200-000	951
2092-3325	943
2092-3325/200-000	951
2092-3352	987
2092-3353	987
2092-3354	987
2092-3355	987
2092-3372	985
2092-3373	985
2092-3374	985
2092-3375	985
2092-3402	945
2092-3402/005-000	946
2092-3402/200-000	953
2092-3402/205-000	954
2092-3403	945
2092-3403/005-000	946
2092-3403/200-000	953

Item Number Index

Item No.	Page
2092 Series	
2092-3403/205-000	954
2092-3404	945
2092-3404/005-000	946
2092-3404/200-000	953
2092-3404/205-000	954
2092-3405	945
2092-3405/005-000	946
2092-3405/200-000	953
2092-3405/205-000	954
2092-3422	945
2092-3422/005-000	946
2092-3422/200-000	953
2092-3422/205-000	954
2092-3423	945
2092-3423/005-000	946
2092-3423/200-000	953
2092-3423/205-000	954
2092-3424	945
2092-3424/005-000	946
2092-3424/200-000	953
2092-3424/205-000	954
2092-3425	945
2092-3425/005-000	946
2092-3425/200-000	953
2092-3425/205-000	954
2092-3502/002-000	941
2092-3503/002-000	941
2092-3504/002-000	941
2092-3505/002-000	941
2092-3522/002-000	941
2092-3522/020-000	941
2092-3523/002-000	941
2092-3523/020-000	941
2092-3524/002-000	941
2092-3524/020-000	941
2092-3525/002-000	941
2092-3525/020-000	941
2092-3600	962
2092-3600/002-000	963
2092-3601	962
2092-3601/002-000	963
2092-3602	962
2092-3602/002-000	963
2092-3702	949
2092-3702/200-000	957
2092-3703	949
2092-3703/200-000	957
2092-3704	949
2092-3704/200-000	957
2092-3705	949
2092-3705/200-000	957
2092-3722	949
2092-3722/200-000	957
2092-3723	949
2092-3723/200-000	957
2092-3724	949
2092-3724/200-000	957
2092-3725	949
2092-3725/200-000	957
2092-4172/200-000	989
2092-4173/200-000	989
2092-4174/200-000	989
2092-4175/200-000	989
2092-4372/200-000	989
2092-4373/200-000	989
2092-4374/200-000	989
2092-4375/200-000	989
2231 Series	
2231-102/008-000	672
2231-102/026-000	671
2231-102/031-000	672
2231-102/037-000	672
2231-102/102-000	671
2231-103/008-000	672
2231-103/026-000	671
2231-103/031-000	672
2231-103/037-000	672
2231-103/102-000	671
2231-104/008-000	672

Item No.	Page
2231 Series	
2231-104/026-000	671
2231-104/031-000	672
2231-104/037-000	672
2231-104/102-000	671
2231-105/008-000	672
2231-105/026-000	671
2231-105/031-000	672
2231-105/037-000	672
2231-105/102-000	671
2231-106/008-000	672
2231-106/026-000	671
2231-106/031-000	672
2231-106/037-000	672
2231-106/102-000	671
2231-107/008-000	672
2231-107/026-000	671
2231-107/031-000	672
2231-107/037-000	672
2231-107/102-000	671
2231-108/008-000	672
2231-108/026-000	671
2231-108/031-000	672
2231-108/037-000	672
2231-108/102-000	671
2231-109/008-000	672
2231-109/026-000	671
2231-109/031-000	672
2231-109/037-000	672
2231-109/102-000	671
2231-110/008-000	672
2231-110/026-000	671
2231-110/031-000	672
2231-110/037-000	672
2231-110/102-000	671
2231-111/008-000	672
2231-111/026-000	671
2231-111/031-000	672
2231-111/037-000	672
2231-111/102-000	671
2231-112/008-000	672
2231-112/026-000	671
2231-112/031-000	672
2231-112/037-000	672
2231-112/102-000	671
2231-113/008-000	672
2231-113/026-000	671
2231-113/031-000	672
2231-113/037-000	672
2231-113/102-000	671
2231-114/008-000	672
2231-114/026-000	671
2231-114/031-000	672
2231-114/037-000	672
2231-114/102-000	671
2231-115/008-000	672
2231-115/026-000	671
2231-115/031-000	672
2231-115/037-000	672
2231-115/102-000	671
2231-116/008-000	672
2231-116/026-000	671
2231-116/031-000	672
2231-116/037-000	672
2231-116/102-000	671
2231-117/008-000	672
2231-117/026-000	671
2231-117/031-000	672
2231-117/037-000	672
2231-117/102-000	671
2231-118/008-000	672
2231-118/026-000	671
2231-118/031-000	672
2231-118/037-000	672
2231-118/102-000	671
2231-119/008-000	672
2231-119/026-000	671
2231-119/031-000	672
2231-119/037-000	672
2231-119/102-000	671
2231-120/008-000	672
2231-120/026-000	671

Item No.	Page
2231 Series	
2231-120/031-000	672
2231-120/037-000	672
2231-120/102-000	671
2231-121/008-000	672
2231-121/026-000	671
2231-121/031-000	672
2231-121/037-000	672
2231-121/102-000	671
2231-122/008-000	672
2231-122/026-000	671
2231-122/031-000	672
2231-122/037-000	672
2231-122/102-000	671
2231-123/008-000	672
2231-123/026-000	671
2231-123/031-000	672
2231-123/037-000	672
2231-123/102-000	671
2231-124/008-000	672
2231-124/026-000	671
2231-124/031-000	672
2231-124/037-000	672
2231-124/102-000	671
2231-202/008-000	751
2231-202/026-000	751
2231-202/031-000	752
2231-202/037-000	751
2231-203/008-000	751
2231-203/026-000	751
2231-203/031-000	752
2231-203/037-000	751
2231-204/008-000	751
2231-204/026-000	751
2231-204/031-000	752
2231-204/037-000	751
2231-205/008-000	751
2231-205/026-000	751
2231-205/031-000	752
2231-205/037-000	751
2231-206/008-000	751
2231-206/026-000	751
2231-206/031-000	752
2231-206/037-000	751
2231-207/008-000	751
2231-207/026-000	751
2231-207/031-000	752
2231-207/037-000	751
2231-208/008-000	751
2231-208/026-000	751
2231-208/031-000	752
2231-208/037-000	751
2231-209/008-000	751
2231-209/026-000	751
2231-209/031-000	752
2231-209/037-000	751
2231-210/008-000	751
2231-210/026-000	751
2231-210/031-000	752
2231-210/037-000	751
2231-211/008-000	751
2231-211/026-000	751
2231-211/031-000	752
2231-211/037-000	751
2231-212/008-000	751
2231-212/026-000	751
2231-212/031-000	752
2231-212/037-000	751
2231-213/008-000	751
2231-213/026-000	751
2231-213/031-000	752
2231-213/037-000	751
2231-216/008-000	751
2231-216/026-000	751
2231-216/031-000	752
2231-216/037-000	751
2231-302/008-000	718
2231-302/026-000	717
2231-302/031-000	718
2231-302/037-000	717
2231-302/102-000	717
2231-302/107-000	718

Item No.	Page
2231 Series	
2231-303/008-000	718
2231-303/026-000	717
2231-303/031-000	718
2231-303/037-000	717
2231-303/102-000	717
2231-303/107-000	718
2231-304/008-000	718
2231-304/026-000	717
2231-304/031-000	718
2231-304/037-000	717
2231-304/102-000	717
2231-304/107-000	718
2231-305/008-000	718
2231-305/026-000	717
2231-305/031-000	718
2231-305/037-000	717
2231-305/102-000	717
2231-305/107-000	718
2231-306/008-000	718
2231-306/026-000	717
2231-306/031-000	718
2231-306/037-000	717
2231-306/102-000	717
2231-306/107-000	718
2231-307/008-000	718
2231-307/026-000	717
2231-307/031-000	718
2231-307/037-000	717
2231-307/102-000	717
2231-307/107-000	718
2231-308/008-000	718
2231-308/026-000	717
2231-308/031-000	718
2231-308/037-000	717
2231-308/102-000	717
2231-308/107-000	718
2231-309/008-000	718
2231-309/026-000	717
2231-309/031-000	718
2231-309/037-000	717
2231-309/102-000	717
2231-309/107-000	718
2231-310/008-000	718
2231-310/026-000	717
2231-310/031-000	718
2231-310/037-000	717
2231-310/102-000	717
2231-310/107-000	718
2231-311/008-000	718
2231-311/026-000	717
2231-311/031-000	718
2231-311/037-000	717
2231-311/102-000	717
2231-312/008-000	718
2231-312/026-000	717
2231-312/031-000	718
2231-312/037-000	717
2231-312/102-000	717
2231-312/107-000	718
2231-313/008-000	718
2231-313/026-000	717
2231-313/031-000	718
2231-313/037-000	717
2231-313/102-000	717
2231-314/008-000	718
2231-314/026-000	717
2231-314/031-000	718
2231-314/037-000	717
2231-314/102-000	717
2231-314/107-000	718
2231-315/008-000	718
2231-315/026-000	717
2231-315/031-000	718
2231-315/037-000	717
2231-315/102-000	717
2231-315/107-000	718
2231-316/008-000	718
2231-316/026-000	717
2231-316/031-000	718
2231-316/037-000	717
2231-316/102-000	717

Item Number Index

Item No.	Page
2231 Series	
2231-316/107-000	718
2231-317/008-000	718
2231-317/026-000	717
2231-317/031-000	718
2231-317/037-000	717
2231-317/102-000	717
2231-318/008-000	718
2231-318/026-000	717
2231-318/031-000	718
2231-318/037-000	717
2231-318/102-000	717
2231-319/008-000	718
2231-319/026-000	717
2231-319/031-000	718
2231-319/037-000	717
2231-319/102-000	717
2231-320/008-000	718
2231-320/026-000	717
2231-320/031-000	718
2231-320/037-000	717
2231-320/102-000	717
2231-321/008-000	718
2231-321/026-000	717
2231-321/031-000	718
2231-321/037-000	717
2231-321/102-000	717
2231-322/008-000	718
2231-322/026-000	717
2231-322/031-000	718
2231-322/037-000	717
2231-322/102-000	717
2231-323/008-000	718
2231-323/026-000	717
2231-323/031-000	718
2231-323/037-000	717
2231-323/102-000	717
2231-324/008-000	718
2231-324/026-000	717
2231-324/031-000	718
2231-324/037-000	717
2231-324/102-000	717
2231-505	638
2231-510	643
2231-515	644
2231-532	823
2231-532/000-009	645
2231-533	823
2231-533/000-009	645
2231-534	823
2231-534/000-009	645
2231-535	824
2231-535/000-009	646
2231-536	824
2231-536/000-009	646
2231-702/008-000	789
2231-702/026-000	789
2231-702/031-000	790
2231-702/037-000	789
2231-703/008-000	789
2231-703/026-000	789
2231-703/031-000	790
2231-703/037-000	789
2231-704/008-000	789
2231-704/026-000	789
2231-704/031-000	790
2231-704/037-000	789
2231-705/008-000	789
2231-705/026-000	789
2231-705/031-000	790
2231-705/037-000	789
2231-706/008-000	789
2231-706/026-000	789
2231-706/031-000	790
2231-706/037-000	789
2231-707/008-000	789
2231-707/026-000	789
2231-707/031-000	790
2231-707/037-000	789
2231-708/008-000	789
2231-708/026-000	789
2231-708/031-000	790

Item No.	Page
2231 Series	
2231-708/037-000	789
2231-709/008-000	789
2231-709/026-000	789
2231-709/031-000	790
2231-709/037-000	789
2231-710/008-000	789
2231-710/026-000	789
2231-710/031-000	790
2231-710/037-000	789
2231-711/008-000	789
2231-711/026-000	789
2231-711/031-000	790
2231-711/037-000	789
2231-712/008-000	789
2231-712/026-000	789
2231-712/031-000	790
2231-712/037-000	789
2231-1102/038-000	675
2231-1102/327-000	675
2231-1103/038-000	675
2231-1103/327-000	675
2231-1103/328-000	675
2231-1104/038-000	675
2231-1104/327-000	675
2231-1104/328-000	675
2231-1105/038-000	675
2231-1105/327-000	675
2231-1105/328-000	675
2231-1106/038-000	675
2231-1106/327-000	675
2231-1106/328-000	675
2231-1107/038-000	675
2231-1107/327-000	675
2231-1107/328-000	675
2231-1108/038-000	675
2231-1108/327-000	675
2231-1108/328-000	675
2231-1110/038-000	675
2231-1110/327-000	675
2231-1112/038-000	675
2231-1112/327-000	675
2231-1112/329-000	675
2231-1116/038-000	675
2231-1116/327-000	675
2231-1116/329-000	675
2231-1602	681
2231-1603	681
2231-1604	681
2231-1605	681
2231-1606	681
2231-1607	681
2231-1608	681
2231-1610	681
2231-1612	681
2231-1616	681
2232 Series	
2232-1202/038-000	755
2232-1202/327-000	755
2232-1203/038-000	755
2232-1203/327-000	755
2232-1204/038-000	755
2232-1204/327-000	755
2601 Series	
2601-1102	199
2601-1103	199
2601-1104	199
2601-1105	199
2601-1106	199
2601-1107	199
2601-1108	199
2601-1109	199
2601-1110	199
2601-1111	199
2601-1112	199
2601-1302	199
2601-1303	199
2601-1304	199
2601-1305	199

Item No.	Page
2601 Series	
2601-1306	199
2601-1307	199
2601-1308	199
2601-1309	199
2601-1310	199
2601-1311	199
2601-1312	199
2601-1502	199
2601-1503	199
2601-1504	199
2601-1505	199
2601-1506	199
2601-1507	199
2601-1508	199
2601-1509	199
2601-1510	199
2601-1511	199
2601-1512	199
2601-3102	200
2601-3103	200
2601-3104	200
2601-3105	200
2601-3106	200
2601-3107	200
2601-3108	200
2601-3109	200
2601-3110	200
2601-3111	200
2601-3112	200
2601-3302	200
2601-3303	200
2601-3304	200
2601-3305	200
2601-3306	200
2601-3307	200
2601-3308	200
2601-3309	200
2601-3310	200
2601-3311	200
2601-3312	200
2601-3502	200
2601-3503	200
2601-3504	200
2601-3505	200
2601-3506	200
2601-3507	200
2601-3508	200
2601-3509	200
2601-3510	200
2601-3511	200
2601-3512	200
2602 Series	
2602-1101	203
2602-1102	205
2602-1103	205
2602-1104	205
2602-1105	205
2602-1106	205
2602-1107	205
2602-1108	205
2602-1109	205
2602-1110	205
2602-1111	205
2602-1112	205
2602-3101	203
2602-3102	205
2602-3103	205
2602-3104	205
2602-3105	205
2602-3106	205
2602-3107	205
2602-3108	205
2602-3109	205
2602-3110	205
2602-3111	205
2602-3112	205
2604 Series	
2604-1101	207

Item No.	Page
2604 Series	
2604-1102	209
2604-1103	209
2604-1104	209
2604-1105	209
2604-1106	209
2604-1107	209
2604-1108	209
2604-1109	209
2604-1110	209
2604-1111	209
2604-1112	209
2604-1302	209
2604-1303	209
2604-1304	209
2604-1305	209
2604-1306	209
2604-1307	209
2604-1308	209
2604-1309	209
2604-1310	209
2604-1311	209
2604-1312	209
2604-1502	209
2604-1503	209
2604-1504	209
2604-1505	209
2604-1506	209
2604-1507	209
2604-1508	209
2604-1509	209
2604-1510	209
2604-1511	209
2604-1512	209
2604-3101	207
2604-3102	210
2604-3103	210
2604-3104	210
2604-3105	210
2604-3106	210
2604-3107	210
2604-3108	210
2604-3109	210
2604-3110	210
2604-3111	210
2604-3112	210
2604-3302	210
2604-3303	210
2604-3304	210
2604-3305	210
2604-3306	210
2604-3307	210
2604-3308	210
2604-3309	210
2604-3310	210
2604-3311	210
2604-3312	210
2604-3502	210
2604-3503	210
2604-3504	210
2604-3505	210
2604-3506	210
2604-3507	210
2604-3508	210
2604-3509	210
2604-3510	210
2604-3511	210
2604-3512	210
2606 Series	
2606-1101	213
2606-1102/020-000	215
2606-1103/020-000	215
2606-1104/020-000	215
2606-1105/020-000	215
2606-1106/020-000	215
2606-1107/020-000	215
2606-1108/020-000	215
2606-1109/020-000	215
2606-1110/020-000	215
2606-1111/020-000	215

Item Number Index

Item No.	Page
2606 Series	
2606-1112/020-000	215
2606-1352	215
2606-1353	215
2606-1354	215
2606-1355	215
2606-1356	215
2606-1357	215
2606-1358	215
2606-1359	215
2606-1360	215
2606-1361	215
2606-1362	215
2606-3101	213
2606-3102/020-000	215
2606-3103/020-000	215
2606-3104/020-000	215
2606-3105/020-000	215
2606-3106/020-000	215
2606-3107/020-000	215
2606-3108/020-000	215
2606-3109/020-000	215
2606-3110/020-000	215
2606-3111/020-000	215
2606-3112/020-000	215
2606-3352	216
2606-3353	216
2606-3354	216
2606-3355	216
2606-3356	216
2606-3357	216
2606-3358	216
2606-3359	216
2606-3360	216
2606-3361	216
2606-3362	216
2616 Series	
2616-1101	219
2616-1102/020-000	221
2616-1103/020-000	221
2616-1104/020-000	221
2616-1105/020-000	221
2616-1106/020-000	221
2616-1107/020-000	221
2616-1108/020-000	221
2616-1109/020-000	221
2616-1110/020-000	221
2616-1111/020-000	221
2616-1112/020-000	221
2616-1352	221
2616-1353	221
2616-1354	221
2616-1355	221
2616-1356	221
2616-1357	221
2616-1358	221
2616-2101	219
2616-2102/020-000	221
2616-2103/020-000	221
2616-2104/020-000	221
2616-2105/020-000	221
2616-2106/020-000	221
2616-2107/020-000	221
2616-2108/020-000	221
2616-2109/020-000	221
2616-2110/020-000	221
2616-2111/020-000	221
2616-2112/020-000	221
2616-3101	219
2616-3102/020-000	222
2616-3103/020-000	222
2616-3104/020-000	222
2616-3105/020-000	222
2616-3106/020-000	222
2616-3107/020-000	222
2616-3109/020-000	222
2616-3110/020-000	222
2616-3111/020-000	222
2616-3112/020-000	222
2616-3352	222

Item No.	Page
2616 Series	
2616-3353	222
2616-3354	222
2616-3355	222
2616-3356	222
2616-3357	222
2616-3358	222
2624 Series	
2624-1101	147
2624-1102	149
2624-1103	149
2624-1104	149
2624-1105	149
2624-1106	149
2624-1107	149
2624-1108	149
2624-1109	149
2624-1110	149
2624-1111	149
2624-1112	149
2624-1302	149
2624-1303	149
2624-1304	149
2624-1305	149
2624-1306	149
2624-1307	149
2624-1308	149
2624-1309	149
2624-1310	149
2624-1311	149
2624-1312	149
2624-1502	149
2624-1503	149
2624-1504	149
2624-1505	149
2624-1506	149
2624-1507	149
2624-1508	149
2624-1509	149
2624-1510	149
2624-1511	149
2624-1512	149
2624-3101	147
2624-3102	150
2624-3103	150
2624-3104	150
2624-3105	150
2624-3106	150
2624-3107	150
2624-3108	150
2624-3109	150
2624-3110	150
2624-3111	150
2624-3112	150
2624-3302	150
2624-3303	150
2624-3304	150
2624-3305	150
2624-3306	150
2624-3307	150
2624-3308	150
2624-3309	150
2624-3310	150
2624-3311	150
2624-3312	150
2624-3502	150
2624-3503	150
2624-3504	150
2624-3505	150
2624-3506	150
2624-3507	150
2624-3508	150
2624-3509	150
2624-3510	150
2624-3511	150
2624-3512	150
2626 Series	
2626-1101	153
2626-1102/020-000	155
2626-1103/020-000	155

Item No.	Page
2626 Series	
2626-1104/020-000	155
2626-1105/020-000	155
2626-1106/020-000	155
2626-1107/020-000	155
2626-1108/020-000	155
2626-1109/020-000	155
2626-1110/020-000	155
2626-1111/020-000	155
2626-1112/020-000	155
2626-1352	156
2626-1353	156
2626-1354	156
2626-1355	156
2626-1356	156
2626-1357	156
2626-1358	156
2626-1359	156
2626-1360	156
2626-1361	156
2626-1362	156
2626-3101	153
2626-3102/020-000	155
2626-3103/020-000	155
2626-3104/020-000	155
2626-3105/020-000	155
2626-3106/020-000	155
2626-3107/020-000	155
2626-3108/020-000	155
2626-3109/020-000	155
2626-3110/020-000	155
2626-3111/020-000	155
2626-3112/020-000	155
2626-3352	156
2626-3353	156
2626-3354	156
2626-3355	156
2626-3356	156
2626-3357	156
2626-3358	156
2626-3359	156
2626-3360	156
2626-3361	156
2626-3362	156
2636 Series	
2636-1101	159
2636-1102/020-000	161
2636-1103/020-000	161
2636-1104/020-000	161
2636-1105/020-000	161
2636-1106/020-000	161
2636-1107/020-000	161
2636-1108/020-000	161
2636-1109/020-000	161
2636-1110/020-000	161
2636-1111/020-000	161
2636-1112/020-000	161
2636-1352	162
2636-1353	162
2636-1354	162
2636-1355	162
2636-1356	162
2636-1357	162
2636-1358	162
2636-3101	159
2636-3102/020-000	161
2636-3103/020-000	161
2636-3104/020-000	161
2636-3105/020-000	161
2636-3106/020-000	161
2636-3107/020-000	161
2636-3108/020-000	161
2636-3109/020-000	161
2636-3110/020-000	161
2636-3111/020-000	161
2636-3112/020-000	161
2636-3352	162
2636-3353	162
2636-3354	162
2636-3355	162

Item No.	Page
2636 Series	
2636-3356	162
2636-3357	162
2636-3358	162
2706 Series	
2706-102	135
2706-103	135
2706-104	135
2706-105	135
2706-106	135
2706-107	135
2706-108	135
2706-109	135
2706-110	135
2706-111	135
2706-112	135
2706-152	137
2706-153	137
2706-154	137
2706-155	137
2706-156	137
2706-157	137
2706-158	137
2706-159	137
2706-160	137
2706-161	137
2706-162	137
2706-202	135
2706-203	135
2706-204	135
2706-205	135
2706-206	135
2706-207	135
2706-208	135
2706-209	135
2706-210	135
2706-211	135
2706-212	135
2706-252	137
2706-253	137
2706-254	137
2706-255	137
2706-256	137
2706-257	137
2706-258	137
2706-259	137
2706-260	137
2706-261	137
2706-262	137
2706-302	135
2706-303	135
2706-304	135
2706-305	135
2706-306	135
2706-307	135
2706-308	135
2706-309	135
2706-310	135
2706-311	135
2706-312	135
2716 Series	
2716-102	139
2716-103	139
2716-104	139
2716-105	139
2716-106	139
2716-107	139
2716-108	139
2716-152	141
2716-153	141
2716-154	141
2716-155	141
2716-156	141
2716-157	141
2716-158	141
2716-202	139
2716-203	139
2716-204	139

Item Number Index

Item No.	Page
2716 Series	
2716-205	139
2716-206	139
2716-207	139
2716-208	139
2716-252	141
2716-253	141
2716-254	141
2716-255	141
2716-256	141
2716-257	141
2716-258	141
2721 Series	
2721-102/008-000	563
2721-102/026-000	563
2721-102/031-000	564
2721-102/037-000	563
2721-103/008-000	563
2721-103/026-000	563
2721-103/031-000	564
2721-103/037-000	563
2721-104/008-000	563
2721-104/026-000	563
2721-104/031-000	564
2721-104/037-000	563
2721-105/008-000	563
2721-105/026-000	563
2721-105/031-000	564
2721-105/037-000	563
2721-106/008-000	563
2721-106/026-000	563
2721-106/031-000	564
2721-106/037-000	563
2721-107/008-000	563
2721-107/026-000	563
2721-107/031-000	564
2721-107/037-000	563
2721-108/008-000	563
2721-108/026-000	563
2721-108/031-000	564
2721-108/037-000	563
2721-109/008-000	563
2721-109/026-000	563
2721-109/031-000	564
2721-109/037-000	563
2721-110/008-000	563
2721-110/026-000	563
2721-110/031-000	564
2721-110/037-000	563
2721-111/008-000	563
2721-111/026-000	563
2721-111/037-000	563
2721-112/008-000	563
2721-112/026-000	563
2721-112/031-000	564
2721-112/037-000	563
2721-113/026-000	563
2721-114/008-000	563
2721-114/026-000	563
2721-114/031-000	564
2721-114/037-000	563
2721-115/008-000	563
2721-115/026-000	563
2721-115/037-000	563
2721-116/008-000	563
2721-116/026-000	563
2721-116/031-000	564
2721-116/037-000	563
2721-120/008-000	563
2721-120/026-000	563
2721-120/031-000	564
2721-120/037-000	563
2721-202/008-000	603
2721-202/026-000	603
2721-202/031-000	604
2721-202/037-000	603
2721-203/008-000	603
2721-203/026-000	603
2721-203/031-000	604
2721-203/037-000	603

Item No.	Page
2721 Series	
2721-204/008-000	603
2721-204/026-000	603
2721-204/031-000	604
2721-204/037-000	603
2721-205/008-000	603
2721-205/026-000	603
2721-205/031-000	604
2721-205/037-000	603
2721-206/008-000	603
2721-206/026-000	603
2721-206/031-000	604
2721-206/037-000	603
2721-207/008-000	603
2721-207/026-000	603
2721-207/031-000	604
2721-207/037-000	603
2721-208/008-000	603
2721-208/026-000	603
2721-208/031-000	604
2721-208/037-000	603
2721-209/008-000	603
2721-209/026-000	603
2721-209/031-000	604
2721-209/037-000	603
2721-210/008-000	603
2721-210/026-000	603
2721-210/031-000	604
2721-210/037-000	603
2721-211/008-000	603
2721-211/026-000	603
2721-211/031-000	604
2721-211/037-000	603
2721-212/008-000	603
2721-212/026-000	603
2721-212/031-000	604
2721-212/037-000	603
2721-1102/037-000	567
2721-1102/326-000	567
2721-1103/037-000	567
2721-1103/326-000	567
2721-1104/037-000	567
2721-1104/326-000	567
2721-1105/037-000	567
2721-1105/326-000	567
2721-1106/037-000	567
2721-1106/326-000	567
2721-1107/037-000	567
2721-1107/326-000	567
2721-1108/037-000	567
2721-1108/326-000	567
2721-1110/037-000	567
2721-1110/326-000	567
2721-1112/037-000	567
2721-1112/326-000	567
2721-1116/037-000	567
2721-1116/326-000	567
2721-1602	577
2721-1603	577
2721-1603/000-040	579
2721-1603/000-041	581
2721-1603/000-042	581
2721-1603/000-043	579
2721-1604	577
2721-1604/000-040	579
2721-1604/000-041	581
2721-1604/000-042	581
2721-1604/000-043	579
2721-1605	577
2721-1605/000-040	579
2721-1605/000-041	581
2721-1605/000-042	581
2721-1605/000-043	579
2721-1606	577
2721-1607	577
2721-1608	577
2721-1610	577
2721-1612	577
2721-1616	577
2722 Series	
2722-1202/326-000	607

Item No.	Page
2722 Series	
2722-1203/326-000	607
2722-1204/326-000	607
2722-1205/326-000	607
2734 Series	
2734-102	445
2734-102/031-000	446
2734-102/037-000	445
2734-102/107-000	445
2734-103	445
2734-103/031-000	446
2734-103/037-000	445
2734-103/107-000	445
2734-104	445
2734-104/031-000	446
2734-104/037-000	445
2734-104/107-000	445
2734-105	445
2734-105/031-000	446
2734-105/037-000	445
2734-105/107-000	445
2734-106	445
2734-106/031-000	446
2734-106/037-000	445
2734-106/107-000	445
2734-107	445
2734-107/031-000	446
2734-107/037-000	445
2734-107/107-000	445
2734-108	445
2734-108/031-000	446
2734-108/037-000	445
2734-108/107-000	445
2734-109	445
2734-109/031-000	446
2734-109/037-000	445
2734-109/107-000	445
2734-110	445
2734-110/027-000	446
2734-110/037-000	445
2734-110/107-000	445
2734-111	445
2734-111/027-000	446
2734-111/037-000	445
2734-111/107-000	445
2734-112	445
2734-112/027-000	446
2734-112/031-000	446
2734-112/037-000	445
2734-112/107-000	445
2734-113	445
2734-113/027-000	446
2734-113/037-000	445
2734-113/107-000	445
2734-114	445
2734-114/027-000	446
2734-114/037-000	445
2734-114/107-000	445
2734-116	445
2734-116/027-000	446
2734-116/037-000	445
2734-116/107-000	445
2734-118	445
2734-118/027-000	446
2734-118/037-000	445
2734-118/107-000	445
2734-120	445
2734-120/027-000	446
2734-120/037-000	445
2734-120/107-000	445
2734-124	445
2734-124/027-000	446
2734-124/037-000	445
2734-124/107-000	445
2734-202	475
2734-202/031-000	475
2734-202/037-000	475
2734-203	475
2734-203/031-000	475
2734-203/037-000	475

Item No.	Page
2734 Series	
2734-204	475
2734-204/031-000	475
2734-204/037-000	475
2734-205	475
2734-205/031-000	475
2734-205/037-000	475
2734-206	475
2734-206/031-000	475
2734-206/037-000	475
2734-208	475
2734-208/031-000	475
2734-208/037-000	475
2734-209	475
2734-209/031-000	475
2734-209/037-000	475
2734-210	475
2734-210/027-000	476
2734-210/031-000	475
2734-210/037-000	475
2734-212	475
2734-212/027-000	476
2734-212/031-000	475
2734-212/037-000	475
2734-214	475
2734-214/027-000	476
2734-214/031-000	475
2734-214/037-000	475
2734-215	475
2734-215/027-000	476
2734-215/037-000	475
2734-216	475
2734-216/027-000	476
2734-216/031-000	475
2734-216/037-000	475
2734-218	475
2734-218/027-000	476
2734-218/037-000	475
2734-219	475
2734-219/027-000	476
2734-219/037-000	475
2734-220	475
2734-220/027-000	476
2734-220/031-000	475
2734-220/037-000	475
2734-402	510
2734-505	497
2734-510	502
2734-516	503
2734-532	504
2734-533	504
2734-534	504
2734-535	505
2734-536	505
2734-1102/038-000	449
2734-1102/327-000	449
2734-1103/038-000	449
2734-1103/327-000	449
2734-1104/038-000	449
2734-1104/327-000	449
2734-1104/328-000	449
2734-1105/038-000	449
2734-1105/327-000	449
2734-1105/328-000	449
2734-1106/038-000	449
2734-1106/327-000	449
2734-1106/328-000	449
2734-1107/038-000	449
2734-1107/327-000	449
2734-1107/328-000	449
2734-1108/038-000	449
2734-1108/327-000	449
2734-1108/328-000	449
2734-1110/038-000	449
2734-1110/327-000	449
2734-1110/328-000	449
2734-1112/038-000	449
2734-1112/327-000	449
2734-1112/329-000	449
2734-1116/038-000	449
2734-1116/327-000	449
2734-1116/329-000	449

Item Number Index

Item No.	Page
2857 Series	
2857-101	1055
2857-102	1055
2857-103	1055
2857-121	1055
2857-122	1055
2857-123	1055
2857-124	1055
2857-191/3140-000	1056
2857-192/3140-000	1056
2857-193/3140-000	1057
2857-194/3140-000	1057

Item No.	Page

Item No.	Page

Item No.	Page

60588169 – 0888-9999/0000-0009 – WAGO PCB Terminal Blocks and Connectors 2025/2 GB – 09/2025-00 – Subject to changes

WAGO GmbH & Co. KG
Postfach 2880 · D · 32385 Minden
Hansastraße 27 · D · 32423 Minden
info@wago.com
www.wago.com

Headquarters +49 571 887 - 0
Sales +49 571 887 - 44222
Order Service +49 571 887 - 44333

Current adresses at **www.wago.com**

WAGO is a registered trademark of WAGO Verwaltungsgesellschaft mbH.
"Copyright – WAGO GmbH & Co. KG – All rights reserved.
The content and structure of the WAGO websites, catalogs, videos and other WAGO media are subject to copyright. Distribution or modification to the contents of these pages and videos is prohibited. Furthermore, the content may neither be copied nor made available to third parties for commercial purposes. Also subject to copyright are the images and videos that were made available to WAGO GmbH & Co. KG by third parties."