Data Sheet | Item Number: 207-1373

Gelbox; inline connection; for cables; with gel; 221 Series; max. 4 mm² connectors; without splicing connectors; Size 2; gray

https://www.wago.com/207-1373

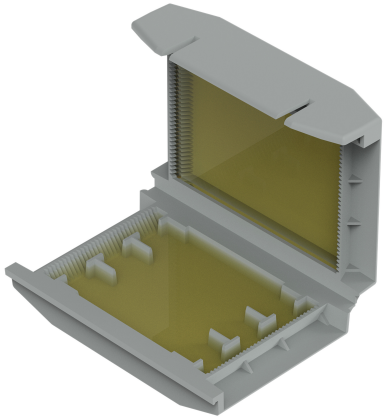

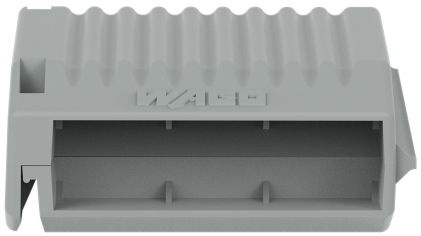

Color: gray





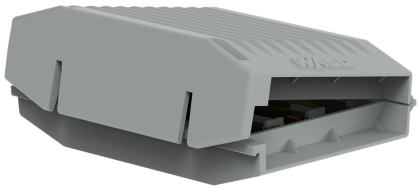

Application Examples
- Bathroom installation (DIN VDE 0100-701)
- Washing facilities/irrigation systems
- Farms and garden centers (DIN VDE 0100-0705)
- Swimming pool areas (DIN VDE 0100-702)
- Parking lot lighting
- Charging stations and lighting systems in ports

Note on Packaging Unit (PU) and Subpackaging Unit (SPU):
If you order a full PU, you will receive our eco-friendly, sustainable cardboard blisters packed in a shelf-ready box.
If you order a quantity smaller than a full PU, you will receive the eco-friendly, sustainable cardboard blisters without a shelf-ready box.

Please refer to the system description for the splicing connectors that can be used.

Your Benefits:
- Easy, fast and safe to use
- Can be used immediately and accessed again later
- Silicon-free
- Label-free
- Suitable for indefinite storage
- The complete system, which consists of gelboxes and WAGO splicing connectors, has been VDE-tested and IPX8-certified.

Connection data

Connection 1

Actuation type	Locking system

Physical data

Width	41.7 mm / 1.614 inches
Height	17.8 mm / 0.669 inches
Depth	56.9 mm / 2.205 inches

Mechanical data

Design	Size 2
Mounting type	Flying leads
Protection type	IPX8
Suitable	for 4 mm² inline splicing connectors

Material data

Note (material data)	Information on material specifications can be found here
Color	gray
Housing material	Polypropylene
Fire load	0 MJ
Weight	19.8 g

Environmental requirements

Ambient temperature (operation)	-55 … +85 °C
Ambient temperature (storage)	0 … +40 °C

Commercial data

PU (SPU)	28 (4) pcs
Packaging type	Box
Country of origin	DE
GTIN	4066966350067
Customs tariff number	85389099990

Product classification

UNSPSC	39121722
ETIM 9.0	EC001170
ETIM 8.0	EC001170
ECCN	NO US CLASSIFICATION

Environmental Product Compliance

RoHS Compliance Status	Compliant,No Exemption

Approvals / Certificates

General approvals

Approval	Standard	Certificate Name
VDE VDE Prüf- und Zertifizierungsinstitut	EN 60998	40051938

Declarations of conformity and manufacturer's declarations

Approval	Standard	Certificate Name
EU-Declaration of Conformity WAGO GmbH & Co. KG	-	-

Downloads

Environmental Product Compliance

Compliance Search

Environmental Product Compliance 207-1373

Documentation

System Description

System Description 207 Series Gel boxes	pdf 1156.45 KB	
System Description 207 Series Gel boxes	pdf 1191.37 KB	

Additional Information

Certificate	pdf 2308.76 KB	
DLG Test Report 7438	pdf 1455.46 KB	

CAD/CAE-Data

CAD data

2D/3D Models
207-1373

Installation Notes

Installation



Open the Gelbox at the side latches.



Place the wired connector in the Gelbox.

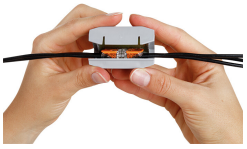

Close the Gelbox.



Close latch securely.



Re-accessible:
Open the Gelbox, remove the gel, open the connector and
rewire with new components.

Application



For low voltage applications > 50 V, use the Gelbox in a junction box.



Connecting a path light.



Lift the flap and pull the cover perforation forward.



Press in the perforation on the sides.



Tear off the cover from the perforation.



As a counter display: Bend the rear flap at the fold, straighten it and fix it in the card-board cut-out



If the flap is not required, tear off from the perforation.