Product Data Sheet

GW44003

Seria 44 CE



Produkty z serii 44 CE stanowią wodoszczelne puszki instalacyjne do montażu natynkowego zgodne z normami EN 60670-1 (CEI 23-48) oraz IEC 60670-22 (CEI 23-94) oraz wykonane z technopolimerów o wysokiej wytrzymałości.. W tej serii produktów znajdują się wersje o stopniu ochrony IP44, IP55, IP56 z gładkimi ściankami lub wyposażone w dławiki kablowe do szybkiego montażu oraz różne rodzaje pokryw: zaślepiające / przezroczyste, wklęsłe / płaskie, wciskane / wkręcane (wykonane z tworzywa sztucznego, również wkręcane na 1/4 obrotu, lub wykonane z metalu).. Produkty dostępne są w wykonaniu z wielu rodzajów materiałów samogasnących (do 960 °C w próbie rozżarzonym drutem). Nadają się do przyłączy zwykłych, do zastosowań specjalnych, a także do zastosowań przemysłowych..

Klasa Izolacji	II (zgodnie z normami IEC 61140)	Kolor	Szary RAL 7035
Ochrona IP	IP44	Materiał	Technopolimerowy GWPLAST 75
Odporność na wstrząsy	IK07	Wymiary wewnętrzne LxHxD (mm)	80x80x40
Wejścia Liczba otworów / Ø	6 / 23	Zastosowanie	Zwykłe przyłącza
Próba rozżarzonym drutem	650 °C	Pokrywka	Płaska wciskana
Temperatura robocza	-25 +60 °C	Rodzaj materiału	Bezhalogenowe zgodnie z normą EN 50267-2-2
Electrocod	02210	Twardość kulkowa	85 °C
Ściany	Z dławikami kablowymi	Wyposażenie dodatkowe do przywrócenia izolacji	GW44622

DIMENSIONAL

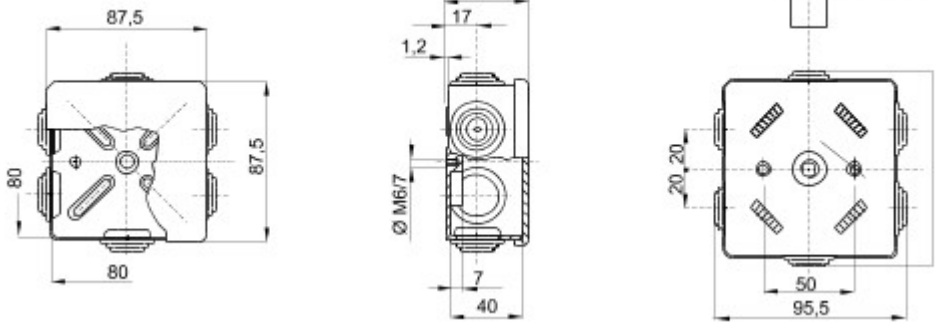

TECHNICAL SYMBOLOGY

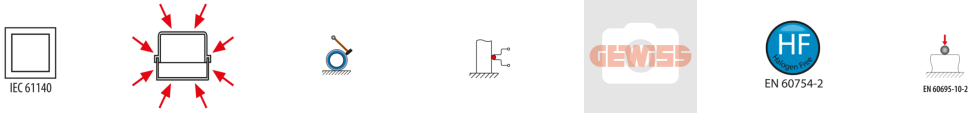

II (zgodnie z normami IEC 61140) | IP44 | IK07 | 650 °C | -25 +60 °C | Bezhalogenowe zgodnie z normą EN 50267-2-2 | 85 °C

STANDARDS/APPROVALS

GEWISS S.p.A. Via A. Volta, 1
24069 Cenate Sotto - Bergamo - Italy
tel. +39 035 94 61 11 fax +39 035 94 69 09

www.gewiss.com
sat@gewiss.com
Last update 11/07/2018

Data, measures, designs and pictures are shown only as informativ purposes, and could be changed without previous notice

44 CE RANGE - SURFACE-MOUNTING JUNCTION BOXES

Material	**Technopolymer GW PLAST 75**								
Heat resistance	**Thermo-pressure with ball: 85°C**								
Fire resistance	**Glow Wire Test: 650°C - UL94: HB**								
Applications	**For ordinary junctions**								
Degree of protection	**IP44**	**IP55**			**IP56**				
Walls	**with quick entry cable glands**	**with quick entry cable glands**		**smooth**	**smooth**				
Depth of back-mounting box	**standard**	**standard**		**standard**	**standard**		**high capacity**		
Cover	**blank plain**	**1/4 turn screws blank plain**	**blank plain**	**1/4 turn screws blank plain**	**blank plain**	**deep blank**	**blank plain**	**transparent plain**	
INTERNAL DIMENSIONS OF BOX BASE LxH (mm) **Dimensions (mm)**								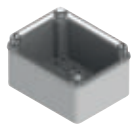	
Ø 65	**GW 44 001**								
Ø 80	**GW 44 002**								
80x80	**GW 44 003**								
100x100		**GW 44 024**	**GW 44 004**	**GW 44 234**	**GW 44 204**	**GW 44 214**	**GW 44 114**		
120x80			**GW 44 005**		**GW 44 205**	**GW 44 215**			
150x110		**GW 44 026**	**GW 44 006**	**GW 44 236**	**GW 44 206**	**GW 44 216**			
190x140			**GW 44 007**		**GW 44 207**	**GW 44 217**	**GW 44 117**	**GW 44 137**	
240x190			**GW 44 008**		**GW 44 208**	**GW 44 218**	**GW 44 118**	**GW 44 138**	
300x220			**GW 44 009**		**GW 44 209**	**GW 44 219**	**GW 44 119**	**GW 44 139**	
380x300			**GW 44 010**		**GW 44 210**	**GW 44 220**	**GW 44 120**	**GW 44 140**	
460x380			**GW 44 011**		**GW 44 211**	**GW 44 221**			

version with Halogen-free material.
(*) versions with red back-mounting box and grey lid
(**) versions CSA approved (in accordance to the UL50 Standard)
In green: insulation voltage Ui=1000V according to EN 60670-1 and EN 60670-22. For photovoltaic applications use the wall fixing brackets , code GW 44 621.
In red: insulation voltage Ui=750V according to EN 60670-1 and EN 60670-22. For photovoltaic applications use the wall fixing brackets , code GW 44 621.

44 CE

Technopolymer surface-mounting watertight junction boxes

Junction boxes with degree of protection up to IP56 for regular, special and industrial junctions. Made of technopolymer GWT 650°C (in halogen-free material) and GWT 960°C. 11 sizes with smooth walls or cable glands with quick input. Lids that may be shallow, deep, blank or transparent, and with conventional or ¼ turn screws. Also available with high-capacity back plate to create high electrification systems with the entry of pipes up to Ø50mm.



Technical characteristics page 1314

SURFACE-MOUNTING BOXES IN GWPLAST 75 - GWT 650°C - FOR ORDINARY JUNCTIONS

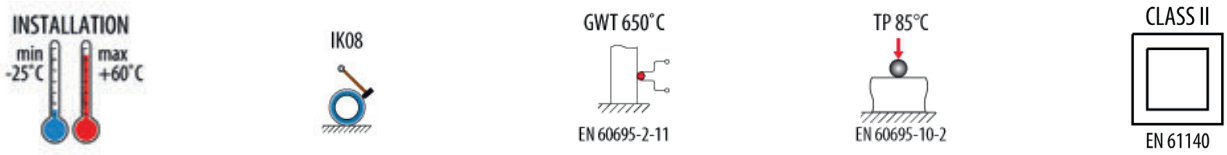

WALLS WITH QUICK ENTRY CABLE GLANDS - IP44 AND IP55



GW 44 001

JUNCTION BOXES WITH PLAIN PRESS-ON LID - IP44 - GREY RAL 7035

HF EN 60754-2

Code	Internal dim. LxHxD (mm)	Entries No. holes / Ø	Pack Carton
GW 44 001	Ø 65x35	4 / 23	5/280
GW 44 002	Ø 80x40	4 / 23	5/135
GW 44 003	80x80x40	6 / 23	5/90

NOTES: to restore the double insulation and original IP degree of protection of the boxes, use the isolating screwcaps.
CHARACTERISTICS: IP 44 boxes with IK07 impact resistance.
The external part of the junction box bottom is provided of central threaded seat. Quick entry cable glands for cables with Ø from 4 to 14 mm and tubes with Ø 16, 20 mm. pressure closing lid.



GW 44 024

JUNCTION BOXES WITH PLAIN QUICK FIXING LID - IP55 - GREY RAL 7035

HF EN 60754-2

Code	Internal dim. LxHxD (mm)	Entries No. holes / Ø	Lid screws (no. and type)	Pack Carton
GW 44 024	100x100x50	6 / 29	4 insul. a 1/4 turn, sealable	66
GW 44 026	150x110x70	10 / 29	4 insul. a 1/4 turn, sealable	40

NOTES: to restore the double insulation and original IP degree of protection of the boxes, use the isolating screwcaps.
CHARACTERISTICS: Quick entry cable glands for cables with Ø from 4 to 14 mm and tubes with Ø 16, 20 and 25 mm. the box bottom has 2 windows of dimensions 6 x 4 mm that allows the box mounting of the box, using the cables ties, to mesh wire cables trays, perforated cables trays, pole supports, etc...

Dimension tables

44 CE RANGE - JUNCTION BOXES WITH CABLE GLANDS

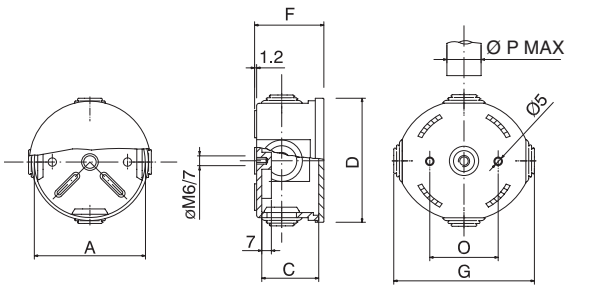

Code	A	C	D	F	G	M	O	P
GW 44 001 GW 44 051	65	35	72.5	40.5	74	17	40	20
GW 44 002 GW 44 052	80	40	87.5	45.5	90.5	17	50	20

NOTE= The opening of the lids must be performed with the aid of a screwdriver.

44 CE RANGE - JUNCTION BOXES WITH CABLE GLANDS

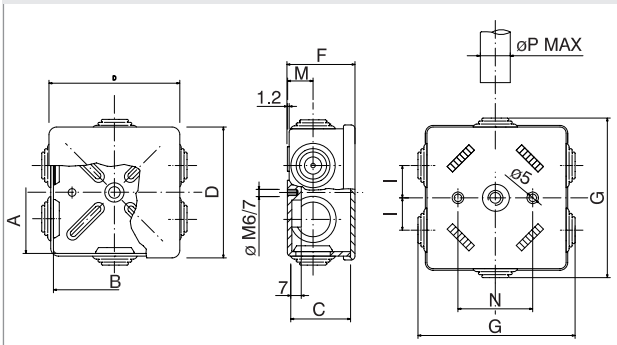

Code	A	B	C	D	F	G	I	M	N	P
GW 44 003 GW 44 053	80	80	40	87.5	45.5	95.5	20	17	50	20

NOTE= The opening of the lids must be performed with the aid of a screwdriver.

44 CE RANGE - JUNCTION BOXES WITH CABLE GLANDS

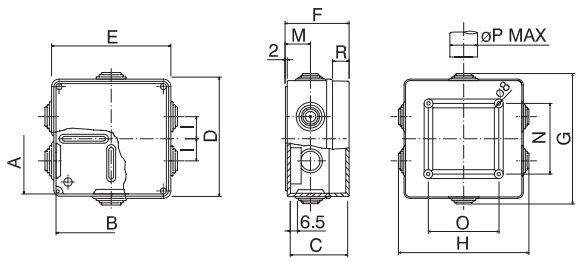

Code	A	B	C	D	E	F	G	H	I	M	N	O	P	R
GW 44 004 GW 44 024 GW 44 054	100	100	52	108	108	58	120.5	120.5	20	23	64	64	25	15
GW 44 005 GW 44 055	120	80	50	129	89	58	140.5	100.5	30	23	82	42	25	15

44 CE RANGE - JUNCTION BOXES WITH CABLE GLANDS

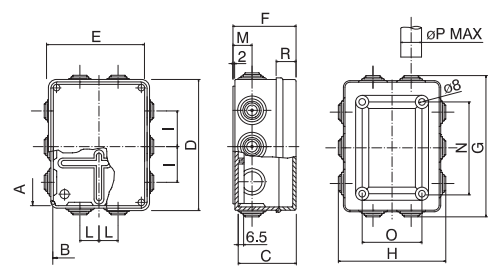

Code	A	B	C	D	E	F	G	H	I	L	M	N	O	P	R
GW 44 006 GW 44 026 GW 44 056	150	110	70	158	118	76	170.5	130.5	43	23	23	112	72	25	24

Quick Reference

Code	Quantity		Page
	Pack/carton	Pallet	
GW 40 886	6	90	**1368**
GW 40 886 BD	6	0	**1368**
GW 40 886 BS	6	0	**1368**
GW 40 888	4	80	**1368**
GW 40 888 BS	4	0	**1368**
GW 40 889	3	45	**1368**
GW 40 889 BD	3	0	**1368**
GW 40 889 BS	3	0	**1368**
GW 40 890	2	48	**1368**
GW 40 890 BD	2	0	**1368**
GW 40 890 BT	2	0	**1368**
GW 40 891	1	24	**1368**
GW 40 891 BD	1	0	**1368**
GW 40 891 BQ	1	0	**1368**
GW 40 981 TB	1/2	80	**1365**
GW 40 981 VA	1/2	80	**1365**
GW 40 981 VT	1/2	80	**1365**
GW 40 991 TB	1/2	64	**1365**
GW 40 991 VA	1/2	64	**1365**
GW 40 991 VT	1/2	64	**1365**
GW41			
GW 41 225 TB	16	128	**1363**
GW 41 225 TN	16	128	**1363**
GW 41 225 VA	16	128	**1363**
GW 41 225 VT	16	128	**1363**
GW 41 229 TB	12	192	**1363**
GW 41 229 TN	12	192	**1363**
GW 41 229 VA	12	96	**1363**
GW 41 229 VT	12	96	**1363**
GW 41 233 TB	5	150	**1363**
GW 41 233 TN	5	80	**1363**
GW 41 233 VA	5	40	**1363**
GW 41 233 VT	5	40	**1363**
GW 41 237 TB	12	240	**1363**
GW 41 237 TN	12	240	**1363**
GW 41 237 VA	12	240	**1363**
GW 41 237 VT	12	240	**1363**
GW 41 239 TB	5	60	**1363**
GW 41 239 TN	5	60	**1363**
GW 41 239 VA	5	60	**1363**
GW 41 239 VT	5	60	**1363**
GW42			
GW 42 001	32	1024	**1325**
GW 42 002	44	704	**1325**
GW 42 003	32	512	**1325**
GW 42 004	16	512	**1325**
GW 42 005	21	336	**1325**
GW 42 006	16	256	**1325**
GW 42 007	10	160	**1325**
GW 42 008	10	250	**1325**
GW 42 009	8	128	**1325**
GW 42 010	5	80	**1325**
GW 42 201	1/10	900	**1292**
GW 42 202	1/10	200	**1293**
GW 42 203	1/10	200	**1293**
GW 42 204	1/10	400	**1292**
GW 42 206	1/10	400	**1293**
GW 42 207	1/10	160	**1293**
GW 42 208	1/10	200	**1293**
GW 42 211	1/10	1440	**1295**
GW 42 212	1/10	1280	**1295**
GW 42 213	1/10	3120	**1295**
GW 42 214	1/10	1440	**1295**

Code	Quantity		Page
	Pack/carton	Pallet	
GW 42 216	1/10	1600	**413**
GW 42 216	1/10	1600	**1295**
GW 42 231	1/10	240	**1293**
GW 42 232	1/10	200	**1293**
GW43			
GW 43 021 S	1	120	**1274**
GW 43 022 S	1	91	**1274**
GW 43 023 S	1	48	**1274**
GW 43 024 S	1	33	**1274**
GW 43 040 S	100	31200	**1279**
GW 43 041 S	1	0	**1277**
GW 43 042 S	2/20	6240	**1278**
GW 43 044 S	10/100	3600	**1279**
GW 43 045 S	10	0	**1277**
GW 43 047 S	1	100	**1276**
GW 43 048 S	1	100	**1276**
GW 43 049 S	1	100	**1276**
GW 43 052 S	1/10	1280	**1279**
GW 43 055 S	1	20	**1275**
GW 43 056 S	1	16	**1275**
GW 43 057 S	1/5	10	**1275**
GW 43 058 S	1	33	**1275**
GW 43 071 S	1/4	364	**1275**
GW 43 072 S	1/4	224	**1275**
GW 43 073 S	1/2	200	**1275**
GW 43 074 S	1/2	160	**1275**
GW 43 081 S	1	16	**1275**
GW 43 082 S	1	16	**1275**
GW 43 083 S	1	20	**1275**
GW 43 085 S	1	20	**1275**
GW 43 101 S	1	80	**1276**
GW 43 102 S	1	80	**1276**
GW 43 103 S	1	80	**1276**
GW 43 104 S	1	80	**1276**
GW 43 111 S	1	0	**1276**
GW 43 112 S	1	32	**1276**
GW 43 113 S	1	20	**1276**
GW 43 114 S	1	6	**1276**
GW 43 122 S	10/100	0	**1278**
GW44			
GW 44 001	5/280	8400	**1303**
GW 44 002	5/135	4725	**1303**
GW 44 003	5/90	4050	**1303**
GW 44 004	66	1980	**1304**
GW 44 005	66	1980	**1304**
GW 44 006	40	1000	**1304**
GW 44 007	24	600	**1304**
GW 44 008	12	300	**1304**
GW 44 009	6	150	**1304**
GW 44 010	4	100	**1304**
GW 44 011	3	60	**1304**
GW 44 024	66	1980	**1303**
GW 44 026	40	1000	**1303**
GW 44 051	5/280	5600	**1307**
GW 44 051 R	5/280	5600	**1307**
GW 44 052	5/135	2700	**1307**
GW 44 053	5/90	2520	**1307**
GW 44 053 R	5/90	2520	**1307**
GW 44 054	66	1980	**1307**
GW 44 054 R	66	1320	**1308**
GW 44 055	66	660	**1308**
GW 44 056	40	800	**1307**
GW 44 056 R	40	640	**1308**

Code	Quantity		Page
	Pack/carton	Pallet	
GW 44 057	24	384	**1308**
GW 44 058	12	192	**1308**
GW 44 059	6	96	**1308**
GW 44 060	4	64	**1308**
GW 44 061	3	36	**1308**
GW 44 114	1/45	900	**1306**
GW 44 117	1/16	256	**1306**
GW 44 118	1/12	192	**1306**
GW 44 119	1/7	84	**1306**
GW 44 120	1/3	60	**1306**
GW 44 137	1/16	128	**1306**
GW 44 138	1/12	192	**1306**
GW 44 139	1/7	84	**1306**
GW 44 140	1/3	60	**1306**
GW 44 204	105	2625	**1305**
GW 44 205	91	2730	**1305**
GW 44 206	50	1250	**1305**
GW 44 207	30	750	**1305**
GW 44 208	14	350	**1305**
GW 44 209	6	180	**1305**
GW 44 210	4	100	**1305**
GW 44 211	3	75	**1305**
GW 44 214	45	900	**1305**
GW 44 215	55	880	**1305**
GW 44 216	24	600	**1305**
GW 44 217	16	384	**1305**
GW 44 218	12	240	**1305**
GW 44 219	7	140	**1305**
GW 44 220	3	75	**1305**
GW 44 221	2	50	**1305**
GW 44 234	105	2625	**1305**
GW 44 236	50	1250	**1305**
GW 44 254	45	360	**1309**
GW 44 255	55	220	**1309**
GW 44 256	24	96	**1309**
GW 44 257	16	240	**1309**
GW 44 258	12	144	**1309**
GW 44 259	7	84	**1309**
GW 44 260	3	48	**1309**
GW 44 261	2	32	**1309**
GW 44 274	105	420	**1309**
GW 44 275	91	1820	**1309**
GW 44 276	50	800	**1309**
GW 44 276 C	50	800	**1309**
GW 44 277	30	480	**1309**
GW 44 277 C	30	480	**1309**
GW 44 278	14	224	**1309**
GW 44 279	6	120	**1309**
GW 44 280	4	64	**1309**
GW 44 281	3	48	**1309**
GW 44 404	108	1728	**1310**
GW 44 405	108	1728	**1310**
GW 44 406	50	800	**1310**
GW 44 407	32	512	**1310**
GW 44 408	14	224	**1310**
GW 44 409	6	120	**1310**
GW 44 410	4	64	**1310**
GW 44 411	3	48	**1310**
GW 44 414	45	360	**1310**
GW 44 415	55	220	**1310**
GW 44 416	24	384	**1310**
GW 44 417	16	240	**1310**
GW 44 418	12	144	**1310**
GW 44 419	7	84	**1310**

① September 2017 ② October 2017 ③ December 2017