Product Data Sheet

GW44217

Seria 44 CE



Produkty z serii 44 CE stanowią wodoszczelne puszki instalacyjne do montażu natynkowego zgodne z normami EN 60670-1 (CEI 23-48) oraz IEC 60670-22 (CEI 23-94) oraz wykonane z technopolimerów o wysokiej wytrzymałości.. W tej serii produktów znajdują się wersje o stopniu ochrony IP44, IP55, IP56 z gładkimi ściankami lub wyposażone w dławiki kablowe do szybkiego montażu oraz różne rodzaje pokryw: zaślepiające / przezroczyste, wklęsłe / płaskie, wciskane / wkręcane (wykonane z tworzywa sztucznego, również wkręcane na 1/4 obrotu, lub wykonane z metalu).. Produkty dostępne są w wykonaniu z wielu rodzajów materiałów samogasnących (do 960 °C w próbie rozżarzonym drutem). Nadają się do przyłączy zwykłych, do zastosowań specjalnych, a także do zastosowań przemysłowych..

Klasa Izolacji	II (zgodnie z normami IEC 61140)	Kolor	Szary RAL 7035
Ochrona IP	IP56	Materiał	Technopolimerowy GWPLAST 75
Odporność na wstrząsy	IK08	Wymiary wewnętrzne LxHxD (mm)	190x140x140
Maks. Ø otworów, możliwa	37 mm	Śruby pokrywy (liczba i typ)	4 izolacja, plombowane, na zawias
Zastosowanie	Zwykłe przyłącza	Próba rozżarzonym drutem	650 °C
Pokrywka	Głęboka wkręcana	Temperatura robocza	-25 +60 °C
Rodzaj materiału	Bezhalogenowe zgodnie z normą EN 50267-2-2	Electrocod	02211
Twardość kulkowa	85 °C	Moment dokręcania moment dokręcania śrub	1.8 NM
Ściany	Gładki	Wyposażenie dodatkowe do przywrócenia izolacji	GW44621, GW44622

DIMENSIONAL

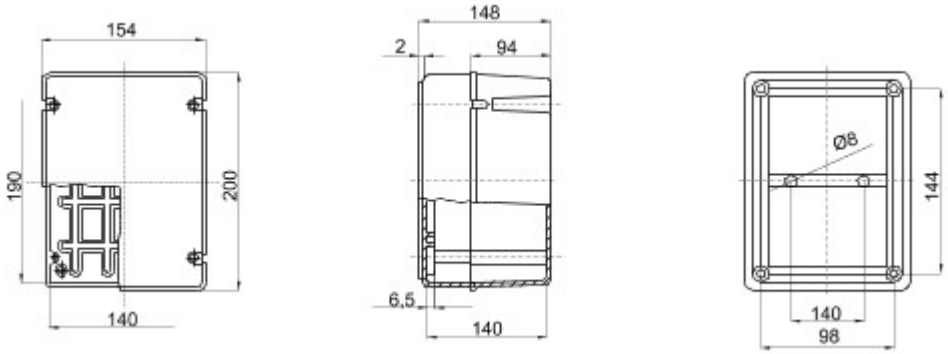

TECHNICAL SYMBOLOGY

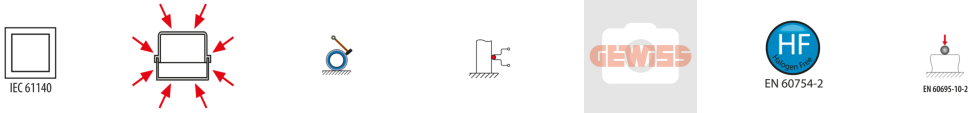

II (zgodnie z normami IEC 61140) | IP56 | IK08 | 650 °C | -25 +60 °C | Bezhalogenowe zgodnie z normą EN 50267-2-2 | 85 °C

STANDARDS/APPROVALS

GEWISS S.p.A. Via A. Volta, 1
24069 Cenate Sotto - Bergamo - Italy
tel. +39 035 94 61 11 fax +39 035 94 69 09

www.gewiss.com
sat@gewiss.com
Last update 12/07/2018

Data, measures, designs and pictures are shown only as informativ purposes, and could be changed without previous notice

44 CE RANGE - SURFACE-MOUNTING JUNCTION BOXES

Material	**Technopolymer GW PLAST 75**								
Heat resistance	**Thermo-pressure with ball: 85°C**								
Fire resistance	**Glow Wire Test: 650°C - UL94: HB**								
Applications	**For ordinary junctions**								
Degree of protection	**IP44**	**IP55**			**IP56**				
Walls	**with quick entry cable glands**	**with quick entry cable glands**		**smooth**	**smooth**				
Depth of back-mounting box	**standard**	**standard**		**standard**	**standard**		**high capacity**		
Cover	**blank plain**	**1/4 turn screws blank plain**	**blank plain**	**1/4 turn screws blank plain**	**blank plain**	**deep blank**	**blank plain**	**transparent plain**	
INTERNAL DIMENSIONS OF BOX BASE LxH (mm) **Dimensions (mm)**								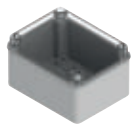	
Ø 65	**GW 44 001**								
Ø 80	**GW 44 002**								
80x80	**GW 44 003**								
100x100		**GW 44 024**	**GW 44 004**	**GW 44 234**	**GW 44 204**	**GW 44 214**	**GW 44 114**		
120x80			**GW 44 005**		**GW 44 205**	**GW 44 215**			
150x110		**GW 44 026**	**GW 44 006**	**GW 44 236**	**GW 44 206**	**GW 44 216**			
190x140			**GW 44 007**		**GW 44 207**	**GW 44 217**	**GW 44 117**	**GW 44 137**	
240x190			**GW 44 008**		**GW 44 208**	**GW 44 218**	**GW 44 118**	**GW 44 138**	
300x220			**GW 44 009**		**GW 44 209**	**GW 44 219**	**GW 44 119**	**GW 44 139**	
380x300			**GW 44 010**		**GW 44 210**	**GW 44 220**	**GW 44 120**	**GW 44 140**	
460x380			**GW 44 011**		**GW 44 211**	**GW 44 221**			

version with Halogen-free material.
(*) versions with red back-mounting box and grey lid
(**) versions CSA approved (in accordance to the UL50 Standard)
In green: insulation voltage Ui=1000V according to EN 60670-1 and EN 60670-22. For photovoltaic applications use the wall fixing brackets , code GW 44 621.
In red: insulation voltage Ui=750V according to EN 60670-1 and EN 60670-22. For photovoltaic applications use the wall fixing brackets , code GW 44 621.

SMOOTH WALLS - IP55 AND IP56



GW 44 234

JUNCTION BOXES WITH PLAIN QUICK FIXING LID - IP55 - GREY RAL 7035

Code	Internal dim. LxHxD (mm)	Max Ø holes possible	Lid screws (no. and type)	Pack Carton
GW 44 234	100x100x50	29 mm	4 insul. a 1/4 turn, sealable	105
GW 44 236	150x110x70	29 mm	4 insul. a 1/4 turn, sealable	50

NOTES: to restore the double insulation and original IP degree of protection of the boxes, use the isolating screwcaps.



GW 44 207

JUNCTION BOXES WITH PLAIN SCREWED LID - IP56 - GREY RAL 7035

Code	Internal dim. LxHxD (mm)	Max Ø holes possible	Lid screws (no. and type)	Pack Carton
GW 44 204	100x100x50	29 mm	4 - Stainless steel	105
GW 44 205	120x80x50	29 mm	4 - Stainless steel	91
GW 44 206	150x110x70	29 mm	4 - Stainless steel	50
GW 44 207	190x140x70	37 mm	4 insul. sealable hinged	30
GW 44 208	240x190x90	37 mm	4 insul. sealable hinged	14
GW 44 209	300x220x120	48 mm	4 insul. sealable hinged	6
GW 44 210	380x300x120	48 mm	4 insul. sealable hinged	4
GW 44 211	460x380x120	48 mm	6 insul. sealable hinged	3

ACCESSORIES SUPPLIED: GW44211 screwcaps for double insulation.

NOTES: to restore the double insulation and original IP degree of protection of the boxes, use the isolating screwcaps or the surface-mounting fixing brackets for boxes measuring at least 190x140mm.



GW 44 217

JUNCTION BOXES WITH DEEP SCREWED LID - IP56 - GREY RAL 7035

Code	Internal dim. LxHxD (mm)	Max Ø holes possible	Lid screws (no. and type)	Pack Carton
GW 44 214	100x100x120	29 mm	4 - Stainless steel	45
GW 44 215	120x80x120	29 mm	4 - Stainless steel	55
GW 44 216	150x110x140	29 mm	4 - Stainless steel	24
GW 44 217	190x140x140	37 mm	4 insul. sealable hinged	16
GW 44 218	240x190x160	37 mm	4 insul. sealable hinged	12
GW 44 219	300x220x180	48 mm	4 insul. sealable hinged	7
GW 44 220	380x300x180	48 mm	4 insul. sealable hinged	3
GW 44 221	460x380x180	48 mm	6 insul. sealable hinged	2

ACCESSORIES SUPPLIED: GW44221 screwcaps for double insulation.

NOTES: to restore the double insulation and original IP degree of protection of the boxes, use the isolating screwcaps or the surface-mounting fixing brackets for boxes measuring at least 190x140mm.

44 CE RANGE - JUNCTION BOXES WITH SMOOTH WALLS - PLAIN LID

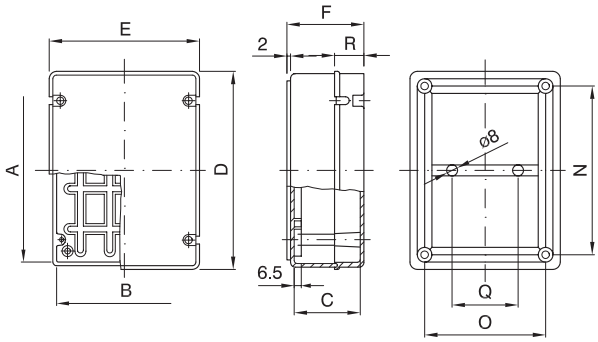

Code	A	B	C	D	E	F	N	O	Q	R
GW 44 207 GW 44 277C GW 44 277 GW 44 407 GW 44 427	190	140	70	200	154	79	144	98	-	25
GW 44 208 GW 44 278 GW 44 408 GW 44 428	240	190	90	254	200	98	194	140	-	28
GW 44 209 GW 44 279 GW 44 409 GW 44 429	300	220	120	316	236	128	250	170	-	49.5
GW 44 210 GW 44 280 GW 44 410 GW 44 430	380	300	120	396	316	128	331	251	124	49.5
GW 44 211 GW 44 281 GW 44 411 GW 44 431	460	380	120	474	396	128	380	310	300	49.5

44 CE RANGE - JUNCTION BOXES WITH SMOOTH WALLS - DEEP LID

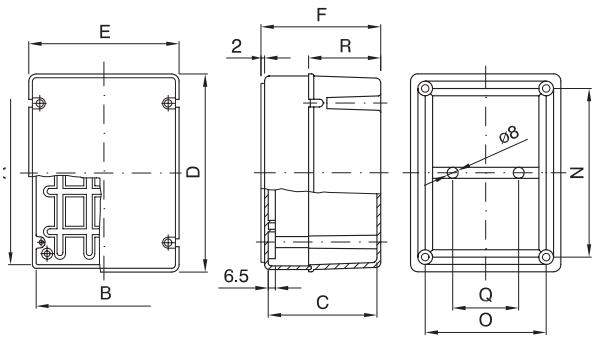

Code	A	B	C	D	E	F	N	O	Q	R
GW 44 217 GW 44 417 GW 44 437 GW 44 257	190	140	140	200	154	148	144	98	-	94
GW 44 218 GW 44 418 GW 44 438 GW 44 258	240	190	160	254	200	167.5	194	140	-	97.5
GW 44 219 GW 44 419 GW 44 439 GW 44 259	300	220	180	316	236	188	250	170	-	109.5
GW 44 220 GW 44 420 GW 44 440 GW 44 260	380	300	180	396	316	188	331	251	124	109.5
GW 44 221 GW 44 421 GW 44 441 GW 44 261	460	380	180	474	396	188	380	310	300	109.5

Quick Reference

Code	Quantity		Page
	Pack/carton	Pallet	
GW 40 886	6	90	**1368**
GW 40 886 BD	6	0	**1368**
GW 40 886 BS	6	0	**1368**
GW 40 888	4	80	**1368**
GW 40 888 BS	4	0	**1368**
GW 40 889	3	45	**1368**
GW 40 889 BD	3	0	**1368**
GW 40 889 BS	3	0	**1368**
GW 40 890	2	48	**1368**
GW 40 890 BD	2	0	**1368**
GW 40 890 BT	2	0	**1368**
GW 40 891	1	24	**1368**
GW 40 891 BD	1	0	**1368**
GW 40 891 BQ	1	0	**1368**
GW 40 981 TB	1/2	80	**1365**
GW 40 981 VA	1/2	80	**1365**
GW 40 981 VT	1/2	80	**1365**
GW 40 991 TB	1/2	64	**1365**
GW 40 991 VA	1/2	64	**1365**
GW 40 991 VT	1/2	64	**1365**
GW41			
GW 41 225 TB	16	128	**1363**
GW 41 225 TN	16	128	**1363**
GW 41 225 VA	16	128	**1363**
GW 41 225 VT	16	128	**1363**
GW 41 229 TB	12	192	**1363**
GW 41 229 TN	12	192	**1363**
GW 41 229 VA	12	96	**1363**
GW 41 229 VT	12	96	**1363**
GW 41 233 TB	5	150	**1363**
GW 41 233 TN	5	80	**1363**
GW 41 233 VA	5	40	**1363**
GW 41 233 VT	5	40	**1363**
GW 41 237 TB	12	240	**1363**
GW 41 237 TN	12	240	**1363**
GW 41 237 VA	12	240	**1363**
GW 41 237 VT	12	240	**1363**
GW 41 239 TB	5	60	**1363**
GW 41 239 TN	5	60	**1363**
GW 41 239 VA	5	60	**1363**
GW 41 239 VT	5	60	**1363**
GW42			
GW 42 001	32	1024	**1325**
GW 42 002	44	704	**1325**
GW 42 003	32	512	**1325**
GW 42 004	16	512	**1325**
GW 42 005	21	336	**1325**
GW 42 006	16	256	**1325**
GW 42 007	10	160	**1325**
GW 42 008	10	250	**1325**
GW 42 009	8	128	**1325**
GW 42 010	5	80	**1325**
GW 42 201	1/10	900	**1292**
GW 42 202	1/10	200	**1293**
GW 42 203	1/10	200	**1293**
GW 42 204	1/10	400	**1292**
GW 42 206	1/10	400	**1293**
GW 42 207	1/10	160	**1293**
GW 42 208	1/10	200	**1293**
GW 42 211	1/10	1440	**1295**
GW 42 212	1/10	1280	**1295**
GW 42 213	1/10	3120	**1295**
GW 42 214	1/10	1440	**1295**

Code	Quantity		Page
	Pack/carton	Pallet	
GW 42 216	1/10	1600	**413**
GW 42 216	1/10	1600	**1295**
GW 42 231	1/10	240	**1293**
GW 42 232	1/10	200	**1293**
GW43			
GW 43 021 S	1	120	**1274**
GW 43 022 S	1	91	**1274**
GW 43 023 S	1	48	**1274**
GW 43 024 S	1	33	**1274**
GW 43 040 S	100	31200	**1279**
GW 43 041 S	1	0	**1277**
GW 43 042 S	2/20	6240	**1278**
GW 43 044 S	10/100	3600	**1279**
GW 43 045 S	10	0	**1277**
GW 43 047 S	1	100	**1276**
GW 43 048 S	1	100	**1276**
GW 43 049 S	1	100	**1276**
GW 43 052 S	1/10	1280	**1279**
GW 43 055 S	1	20	**1275**
GW 43 056 S	1	16	**1275**
GW 43 057 S	1/5	10	**1275**
GW 43 058 S	1	33	**1275**
GW 43 071 S	1/4	364	**1275**
GW 43 072 S	1/4	224	**1275**
GW 43 073 S	1/2	200	**1275**
GW 43 074 S	1/2	160	**1275**
GW 43 081 S	1	16	**1275**
GW 43 082 S	1	16	**1275**
GW 43 083 S	1	20	**1275**
GW 43 085 S	1	20	**1275**
GW 43 101 S	1	80	**1276**
GW 43 102 S	1	80	**1276**
GW 43 103 S	1	80	**1276**
GW 43 104 S	1	80	**1276**
GW 43 111 S	1	0	**1276**
GW 43 112 S	1	32	**1276**
GW 43 113 S	1	20	**1276**
GW 43 114 S	1	6	**1276**
GW 43 122 S	10/100	0	**1278**
GW44			
GW 44 001	5/280	8400	**1303**
GW 44 002	5/135	4725	**1303**
GW 44 003	5/90	4050	**1303**
GW 44 004	66	1980	**1304**
GW 44 005	66	1980	**1304**
GW 44 006	40	1000	**1304**
GW 44 007	24	600	**1304**
GW 44 008	12	300	**1304**
GW 44 009	6	150	**1304**
GW 44 010	4	100	**1304**
GW 44 011	3	60	**1304**
GW 44 024	66	1980	**1303**
GW 44 026	40	1000	**1303**
GW 44 051	5/280	5600	**1307**
GW 44 051 R	5/280	5600	**1307**
GW 44 052	5/135	2700	**1307**
GW 44 053	5/90	2520	**1307**
GW 44 053 R	5/90	2520	**1307**
GW 44 054	66	1980	**1307**
GW 44 054 R	66	1320	**1308**
GW 44 055	66	660	**1308**
GW 44 056	40	800	**1307**
GW 44 056 R	40	640	**1308**

Code	Quantity		Page
	Pack/carton	Pallet	
GW 44 057	24	384	**1308**
GW 44 058	12	192	**1308**
GW 44 059	6	96	**1308**
GW 44 060	4	64	**1308**
GW 44 061	3	36	**1308**
GW 44 114	1/45	900	**1306**
GW 44 117	1/16	256	**1306**
GW 44 118	1/12	192	**1306**
GW 44 119	1/7	84	**1306**
GW 44 120	1/3	60	**1306**
GW 44 137	1/16	128	**1306**
GW 44 138	1/12	192	**1306**
GW 44 139	1/7	84	**1306**
GW 44 140	1/3	60	**1306**
GW 44 204	105	2625	**1305**
GW 44 205	91	2730	**1305**
GW 44 206	50	1250	**1305**
GW 44 207	30	750	**1305**
GW 44 208	14	350	**1305**
GW 44 209	6	180	**1305**
GW 44 210	4	100	**1305**
GW 44 211	3	75	**1305**
GW 44 214	45	900	**1305**
GW 44 215	55	880	**1305**
GW 44 216	24	600	**1305**
GW 44 217	16	384	**1305**
GW 44 218	12	240	**1305**
GW 44 219	7	140	**1305**
GW 44 220	3	75	**1305**
GW 44 221	2	50	**1305**
GW 44 234	105	2625	**1305**
GW 44 236	50	1250	**1305**
GW 44 254	45	360	**1309**
GW 44 255	55	220	**1309**
GW 44 256	24	96	**1309**
GW 44 257	16	240	**1309**
GW 44 258	12	144	**1309**
GW 44 259	7	84	**1309**
GW 44 260	3	48	**1309**
GW 44 261	2	32	**1309**
GW 44 274	105	420	**1309**
GW 44 275	91	1820	**1309**
GW 44 276	50	800	**1309**
GW 44 276 C	50	800	**1309**
GW 44 277	30	480	**1309**
GW 44 277 C	30	480	**1309**
GW 44 278	14	224	**1309**
GW 44 279	6	120	**1309**
GW 44 280	4	64	**1309**
GW 44 281	3	48	**1309**
GW 44 404	108	1728	**1310**
GW 44 405	108	1728	**1310**
GW 44 406	50	800	**1310**
GW 44 407	32	512	**1310**
GW 44 408	14	224	**1310**
GW 44 409	6	120	**1310**
GW 44 410	4	64	**1310**
GW 44 411	3	48	**1310**
GW 44 414	45	360	**1310**
GW 44 415	55	220	**1310**
GW 44 416	24	384	**1310**
GW 44 417	16	240	**1310**
GW 44 418	12	144	**1310**
GW 44 419	7	84	**1310**

① September 2017 ② October 2017 ③ December 2017