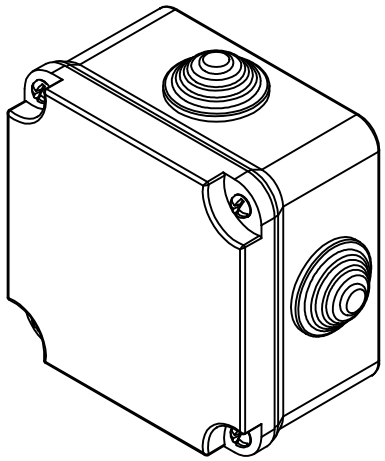

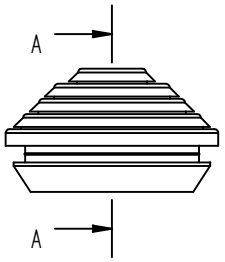

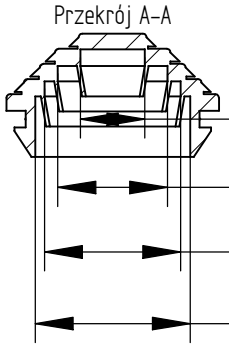

(1) ∅ 8 -∅ 9

(2)∅ 12 - ∅ 14

(3)∅ 16 - ∅ 18

(4) ∅ 20

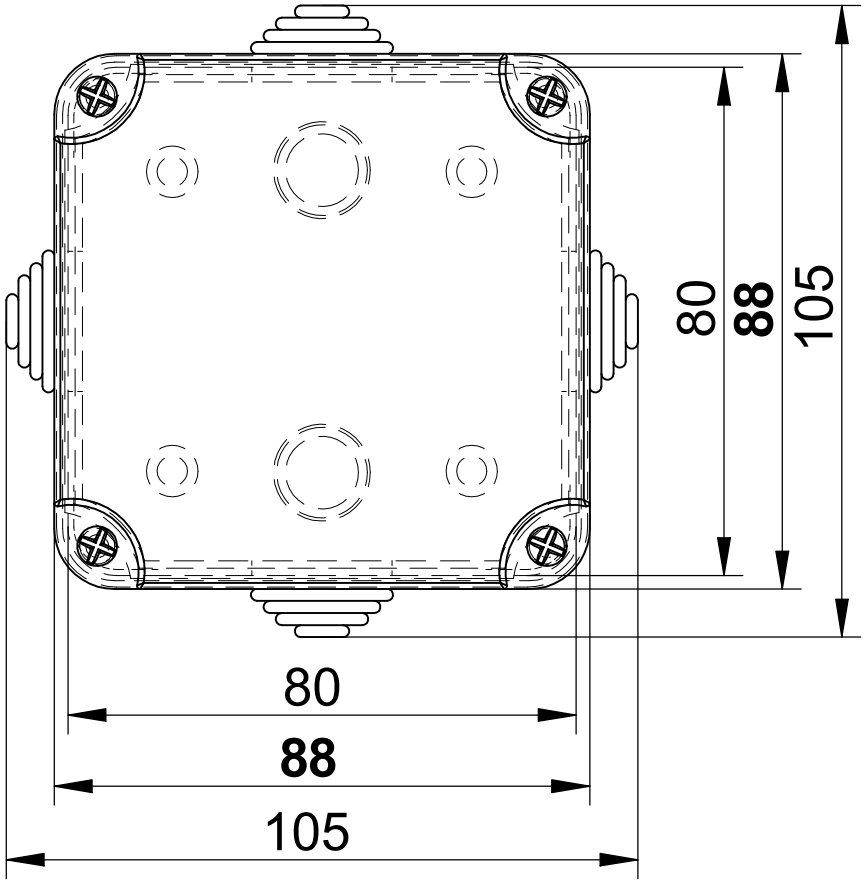

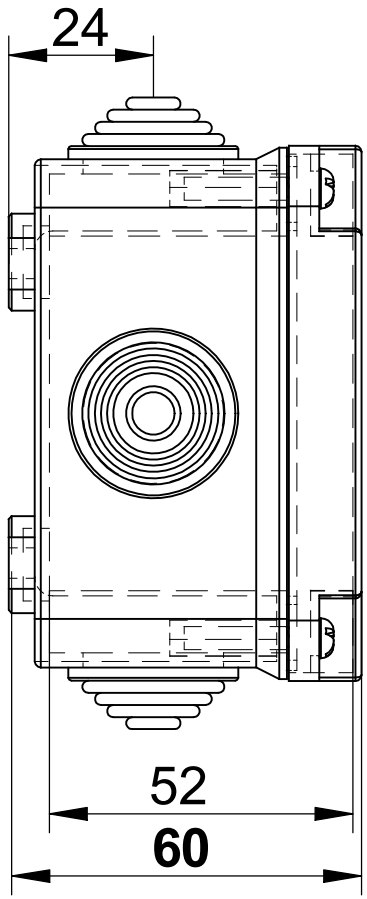

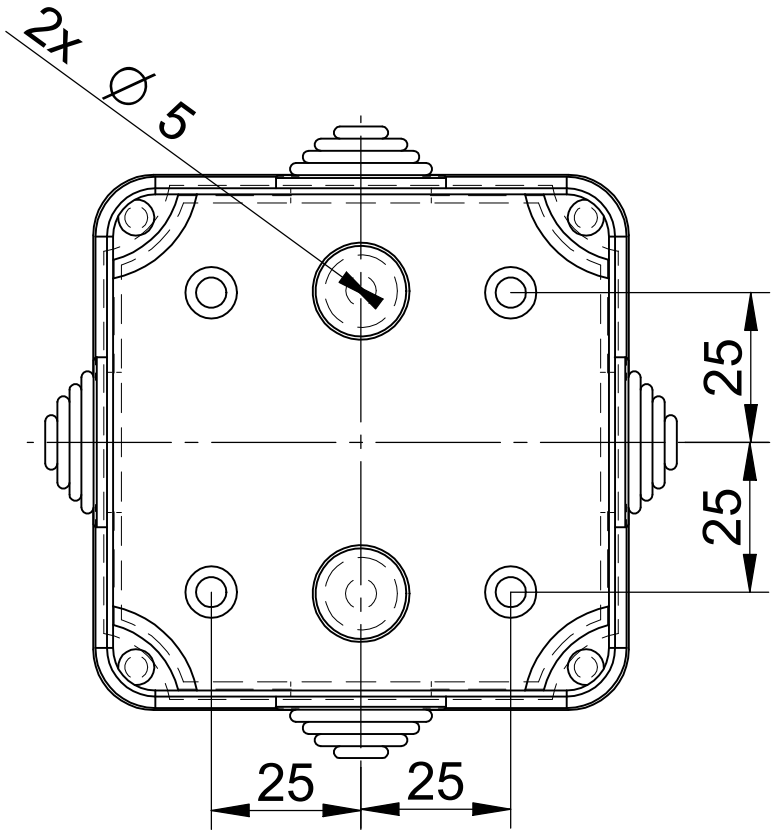

0224-00