Product Data Sheet

GW52005

Seria GW Connect



System akcesoriów instalacji elektrycznych do zastosowań w środowiskach mieszkalnych, usługowych i przemysłowych. W skład systemu wchodzą elementy złączne do rur i przewodów, osprzęt kablowy, akcesoria przeznaczone do rur sztywnych (seria RK) oraz przewodów elastycznych (seria DF). W skład systemu wchodzi również szeroka gama opasek kablowych (seria 52FS) oraz bloków zaciskowych (Seria 44).

Kolor	Szary RAL 7035	Ochrona IP	IP66
Materiał	Nylon	Do kabli Ø (mm)	od 13 do 16
PG podziałka	16	Ø otworu montażowego (w mm)	23
Opis	Dławik kablowy	Rodzaj podziałki	PG16
Próba rozżarzonym drutem	650 °C	Temperatura robocza	-25 +65 °C
Electrocod	36B	Norma	EN 50262 - IEC62444 - DIN 40430

DIMENSIONAL

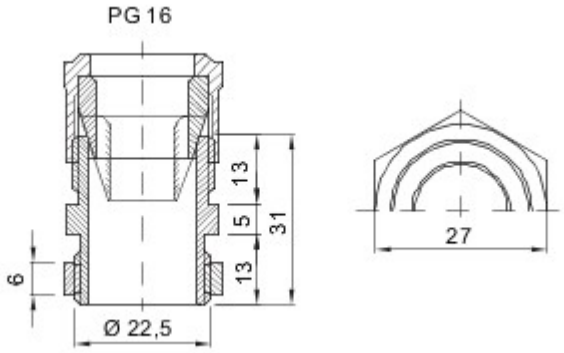

TECHNICAL SYMBOLOGY

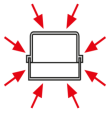
IP66


650 °C


-25 +65 °C

STANDARDS/APPROVALS

CE

GEWISS S.p.A. Via A. Volta, 1
24069 Cenate Sotto - Bergamo - Italy
tel. +39 035 94 61 11 fax +39 035 94 69 09

www.gewiss.com
sat@gewiss.com
Last update 12/07/2018

Data, measures, designs and pictures are shown only as informativ purposes, and could be changed without previous notice

DRILLING FOR BASICS POLYFUNCTIONAL SUPPORT

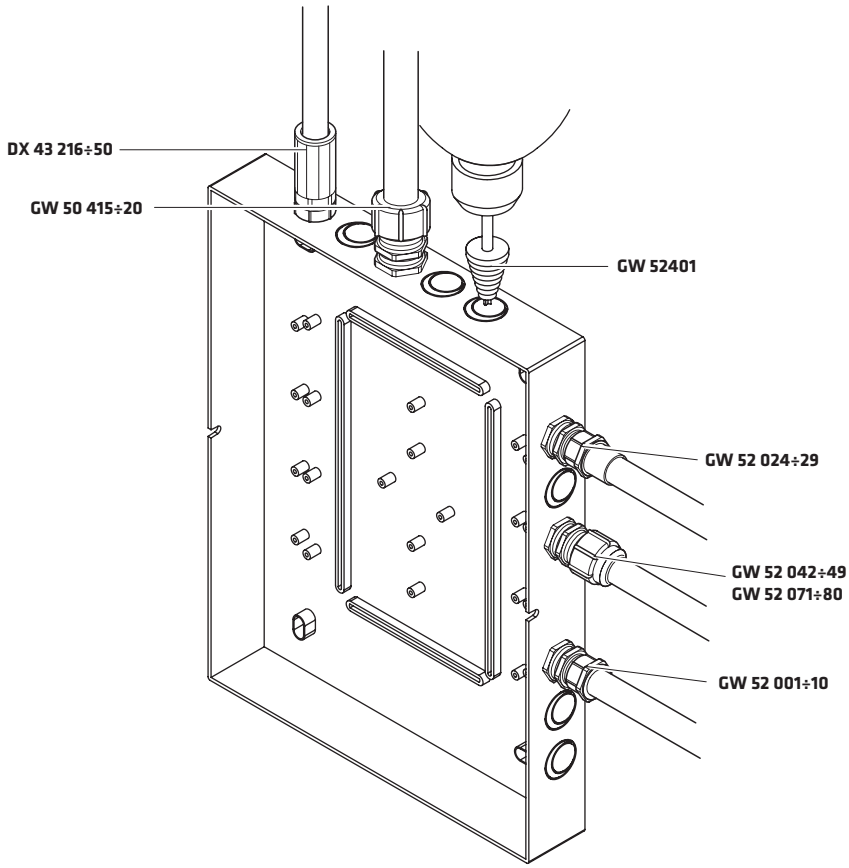

GW FIT

	PLASTIC CABLE GLANDS									METAL CABLE GLANDS			
	IP68 		IP66 		IP66 with housing 			IP54 		IP68 		IP 65 	
Thread	**Code**	**For cables Ø (mm)**	**Code**	**For cables Ø (mm)**	**Code**	**For conduits Ø (mm)**	**For cables Ø (mm)**	**Code**	**For cables Ø (mm)**	**Code**	**For cables Ø (mm)**	**Code**	**For cables Ø (mm)**
PG7	GW 52 071	3 ÷ 6,5	GW 52 001	3 ÷ 6				GW 52 081	4 ÷ 6				
PG9	GW 52 072	4 ÷ 8	GW 52 002	5 ÷ 8				GW 52 082	4,5 ÷ 7				
PG11	GW 52 073	5 ÷ 10	GW 52 003	7 ÷ 10,5				GW 52 083	6 ÷ 9	GW 76 825	4 ÷ 9	GW 76 841	7,5/10/12,5
PG13,5	GW 52 074	6 ÷ 12	GW 52 004	9 ÷ 12,5	GW 52 024	16	9 ÷ 12,5	GW 52 084	9 ÷ 12	GW 76 826	7 ÷ 11	GW 76 842	7,5/10/12,5
PG16	GW 52 075	10 ÷ 14	GW 52 005	13 ÷ 16	GW 52 025	20	13 ÷ 16	GW 52 085	11 ÷ 14	GW 76 827	10 ÷ 13	GW 76 843	7,5/10/12,5
PG21	GW 52 076	13 ÷ 18	GW 52 006	9 ÷ 10 17 ÷ 20	GW 52 026	25	9 ÷ 10 17 ÷ 20	GW 52 086	14 ÷ 18	GW 76 828	12 ÷ 17	GW 76 844	10/13/16/19
PG29	GW 52 077	18 ÷ 25	GW 52 007	13,5 ÷ 15 21 ÷ 26	GW 52 027	32	13,5 ÷ 15 21 ÷ 26	GW 52 087	18 ÷ 25	GW 76 829	17 ÷ 24	GW 76 845	18/21/24/27
PG36	GW 52 078	22 ÷ 32	GW 52 008	17 ÷ 20 30 ÷ 34	GW 52 028	40	17 ÷ 20 30 ÷ 34	GW 52 088	26 ÷ 32	GW 76 830	20 ÷ 26 27 ÷ 24	GW 76 846	24/27/30/33
PG42	GW 52 079	30 ÷ 38	GW 52 009	36 ÷ 39 40 ÷ 43	GW 52 029	50	36 ÷ 39 40 ÷ 43			GW 76 897	32 ÷ 36	GW 76 847	30/33/36/39
PG48	GW 52 080	34 ÷ 44	GW 52 010	38 ÷ 40 46 ÷ 50									
M12	GW 52 042	3 ÷ 6,5								GW 76 894	3 ÷ 6,5		
M16	GW 52 043	5 ÷ 10								GW 76 896	4 ÷ 9		
M20	GW 52 044	10 ÷ 14								GW 76 831	10 ÷ 13	GW 76 848	4/7/10/13
M25	GW 52 045	13 ÷ 18								GW 76 832	12 ÷ 17	GW 76 849	8,5/11,5/14,5/17,5
M32	GW 52 046	18 ÷ 25								GW 76 833	14 ÷ 21	GW 76 850	16/19/22/25
M40	GW 52 047	22 ÷ 32								GW 76 834	19 ÷ 27	GW 76 851	23/26/29/32
M50	GW 52 048	30 ÷ 38								GW 76 835	25 ÷ 34	GW 76 852	30/33/36/39
M63	GW 52 049	35 ÷ 44								GW 76 895	34 ÷ 48		

	PLASTIC ACCESSORIES			METAL ACCESSORIES						GASKETS
	Caps 	Nuts 		Caps 	Nuts 		Extensions 			O-ring for caps 
Thread	**Code**	**Code**	**Spanner (mm)**	**Code**	**Code**	**Spanner (mm)**	**Code**	**Male thread**	**Female thread**	**Code**
PG7	GW 52 361	GW 52 341	19							GW 52 441
PG9	GW 52 362	GW 52 342	22							GW 52 442
PG11	GW 52 363	GW 52 343	24	GW 76 980	GW 76 957	21	GW 76 865	PG11	PG13,5	GW 52 443
PG13,5	GW 52 364	GW 52 344	27	GW 76 981	GW 76 958	23	GW 76 866	PG13,5	PG16	GW 52 444
PG16	GW 52 365	GW 52 345	30	GW 76 982	GW 76 959	26	GW 76 867	PG16	PG21	GW 52 445
PG21	GW 52 366	GW 52 346	36	GW 76 983	GW 76 960	32	GW 76 868	PG21	PG29	GW 52 446
PG29	GW 52 367	GW 52 347	46	GW 76 984	GW 76 961	41	GW 76 869	PG29	PG36	GW 52 447
PG36	GW 52 368	GW 52 348	60	GW 76 985	GW 76 962	51				GW 52 448
PG42	GW 52 369	GW 52 349	65	GW 76 986	GW 76 963	60				GW 52 449
PG48	GW 52 370	GW 52 350	70							GW 52 450
M12	GW 52 372	GW 52 352	18	GW 76 972	GW 76 966	15				GW 52 452
M16	GW 52 373	GW 52 353	22	GW 76 973	GW 76 951	19				GW 52 453
M20	GW 52 374	GW 52 354	26	GW 76 975	GW 76 952	23	GW 76 870	M20	M25	GW 52 454
M25	GW 52 375	GW 52 355	32	GW 76 976	GW 76 953	29	GW 76 871	M25	M32	GW 52 455
M32	GW 52 376	GW 52 356	41	GW 76 977	GW 76 954	36	GW 76 872	M32	M40	GW 52 456
M40	GW 52 377	GW 52 357	50	GW 76 978	GW 76 955	45	GW 76 873	M40	M50	GW 52 457
M50	GW 52 378	GW 52 358	60	GW 76 979	GW 76 956	55				GW 52 458
M63	GW 52 379	GW 52 359	75	GW 76 974	GW 76 967	70				GW 52 459

GW FIT

Accessories for electrical installations

Complete system comprising cable glands, plastic and metal fixings, couplings for rigid conduits and sheaths, cable ties for external and junction and connection terminal blocks. The depth of the range and breadth of the offers of each family makes GEWISS the specialist and ideal partner when implementing any type of system, from residential to commercial and industrial sector.



Technical characteristics page 1526

PLASTIC CABLE GLANDS AND ACCESSORIES

CABLE GLANDS







GW 52 001

NYLON CABLE GLANDS - PG PITCH - GREY RAL 7035 - IP66

Code	PG pitch	Mounting hole Ø (mm)	For cables Ø (mm)	Pack Carton
GW 52 001	7	12.5	from 3 to 6	50/900
GW 52 002	9	16	from 6 to 8	50/600
GW 52 003	11	19	from 8 to 10.5	25/500
GW 52 004	13.5	20	from 9 to 12.5	25/500
GW 52 005	16	23	from 13 to 16	25/375
GW 52 006	21	29	from 9 to 10/from 17 to 20	25/400
GW 52 007	29	37	from 13.5 to 15/from 21 to 26	25/250
GW 52 008	36	48	from 17 to 20/from 30 to 34	10/130
GW 52 009	42	54	from 36 to 39/from 40 to 43	6/120
GW 52 010	48	60	from 38 to 40/from 46 to 50	5/100

ACCESSORIES SUPPLIED: fixing nut.
APPLICATIONS: for making watertight installations with direct grip on cable.



GW 52 075

NYLON CABLE GLANDS - PG PITCH - GREY RAL 7035 - IP68

Code	PG pitch	Mounting hole Ø (mm)	For cables Ø (mm)	Pack Carton
GW 52 071	7	12.5	from 3.5 to 6.5	50/600
GW 52 072	9	16	from 4 to 8	50/400
GW 52 073	11	19	from 5 to 10	50/600
GW 52 074	13.5	20	from 6 to 12	25/300
GW 52 075	16	23	from 10 to 14	25/300
GW 52 076	21	29	from 13 to 18	25/200
GW 52 077	29	37	from 18 to 25	25/150
GW 52 078	36	48	from 22 to 32	10/120
GW 52 079	42	54	from 30 to 38	6/84
GW 52 080	48	60	from 34 to 44	5/60

ACCESSORIES SUPPLIED: fixing nut.



GW 52 042

NYLON CABLE GLANDS - METRIC PITCH - GREY RAL 7035 - IP68

Code	ISO pitch	Mounting hole Ø (mm)	For cables Ø (mm)	Pack Carton
GW 52 042	12x1.25	12	from 3 to 6.5	50/600
GW 52 043	16x1.5	16	from 5 to 10	50/400
GW 52 044	20x1.5	20	from 10 to 14	25/300
GW 52 045	25x1.5	25	from 13 to 18	25/200
GW 52 046	32x1.5	32	from 18 to 25	25/150
GW 52 047	40x1.5	40	from 22 to 32	10/120
GW 52 048	50x1.5	50	from 30 to 38	6/84
GW 52 049	63x1.5	63	from 35 to 44	5/60

ACCESSORIES SUPPLIED: fixing nut.
APPLICATIONS: direct installation on fixing enclosures or components in feedthrough holes.
Coupling in installations where a high protection rating is required in the presence of chemical substances, shocks and vibrations.

GW FIT



HIGH PERFORMANCE CABLE GLANDS



The selection of GEWISS cable glands provides plastic and metal versions with IP54, IP66 and IP68 degrees of protection, developed to suit any installation requirement in industrial applications and on the machine. Completing the offer, metal cable glands for ATEX environments.

AN EXTENSIVE CONDUIT AND CABLE FIXING SYSTEM



Available in plastic and metal and designed to meet every need: the range consists of snap-fit or collar conduit fixings accessories, also in multidiameter version and with a built-in wall plug version for faster installation.

TIES AND TERMINAL BLOCKS FOR EFFECTIVE WIRING



Range of ties which includes 6 different product lines: from the PA66 wiring versions to the L.T.R. versions for external applications in PA12. Range of terminal blocks in various types: movable terminal blocks, multi-pole, modular distribution and equipotential single-pole for DIN rails.

CABLE GLANDS

Cable glands and plastic accessories

TECHNICAL CHARACTERISTICS	
Regulatory Compliance:	Insulation resistance: >100MΩ a 500 V
Cable Glands: EN 50262; IEC 62444	Protection degree: IP44; IP55; IP66; IP68
Metric pitch: IEC/EN 60243	Rated voltage: 2000 V a 50 Hz
PG pitch: DIN 40430	Glow Wire Test: 650 °C cable glands
Couplings and cable glands: EN 61386-1 e EN 60670-1 as applicable	750 °C couplings and grommets
Temperature of installation: Min -25°C Max +65°C (cable glands and coupling conduit/box IP66)	
Min -5°C Max +60°C (grommets and coupling conduit/box IP55)	

BEHAVIOUR WITH CHEMICAL AND ATMOSPHERIC AGENTS												
Agent	Saline solution	Acids		Bases		Solvents				Mineral oil	UV rays
		Concentrated	Diluted	Concentrated	Diluted	Hexane	Benzol	Acetone	Ethyl alcohol		
Cable glands	Resistant	Limited resistance	Limited resistance	Resistant	Resistant	Resistant	Resistant	Resistant	Resistant	Resistant	Limited resistance
Couplings and cable glands	Resistant	Limited resistance	Limited resistance	Resistant	Resistant	Resistant	Resistant	Resistant	Resistant	Resistant	Limited resistance

Dimension tables

PG PITCH CABLE GLANDS - IP66

Cable glands

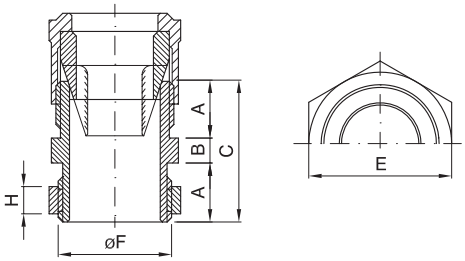

Code	PG pitch	A	B	C	E	H	øF
GW 52 001	7	8	3	19	16	3.5	12.5
GW 52 002	9	9	3.5	21.5	19	4	15.2
GW 52 003	11	10.5	4	25	22	5	18.6
GW 52 004	13.5	12	4.5	28.5	24	5.5	20.4
GW 52 005	16	13	5	31	27	6	22.5
GW 52 006	21	14	6	34	32	6.5	28.3
GW 52 007	29	15	8	38	41	8	37
GW 52 008	36	18	9	45	55	9	47
GW 52 009	42	20	9	49	62	10	54
GW 52 010	48	22	9	53	66	14.5	59.3

Code	Quantity		Page
	Pack/carton	Pallet	
GW 49 999	1	38	930
GW50			
GW 50 201	20/60	2400	1430
GW 50 201	20/60	2400	1511
GW 50 202	20/120	4560	1430
GW 50 202	20/120	4560	1511
GW 50 203	10/40	720	1430
GW 50 203	10/40	720	1511
GW 50 204	10/60	960	1430
GW 50 204	10/60	960	1511
GW 50 205	6/30	180	1430
GW 50 205	6/30	180	1511
GW 50 206	6/36	432	1430
GW 50 206	6/36	432	1511
GW 50 207	20/60	6000	1430
GW 50 207	20/60	6000	1511
GW 50 208	20/120	6000	1430
GW 50 208	20/120	6000	1511
GW 50 209	20/120	2880	1430
GW 50 209	20/120	2880	1511
GW 50 210	10/20	1280	1430
GW 50 210	10/20	1280	1511
GW 50 211	6/30	540	1430
GW 50 211	6/30	540	1511
GW 50 212	6/36	432	1430
GW 50 212	6/36	432	1511
GW 50 415	25/200	8000	1454
GW 50 415	25/200	8000	1497
GW 50 416	25/200	14400	1454
GW 50 416	25/200	14400	1497
GW 50 417	25/150	7500	1454
GW 50 417	25/150	7500	1497
GW 50 418	10/100	1800	1454
GW 50 418	10/100	1800	1497
GW 50 419	6/60	1080	1454
GW 50 419	6/60	1080	1497
GW 50 420	5/50	900	1454
GW 50 420	5/50	900	1497
GW 50 421	50/700	12600	1497
GW 50 422	50/700	12600	1497
GW 50 423	25/350	6300	1497
GW 50 424	25/350	6300	1497
GW 50 425	15/210	2100	1497
GW 50 426	10/160	2560	1497
GW 50 427	10/90	1440	1497
GW 50 428	100/1000	0	1313
GW 50 428	100/1000	0	1497
GW 50 429	100/1000	50000	1313
GW 50 429	100/1000	50000	1497
GW 50 430	100/1000	30000	1313
GW 50 430	100/1000	30000	1497
GW 50 431	50/500	21000	1313
GW 50 431	50/500	21000	1497
GW 50 432	35/350	11200	1313
GW 50 432	35/350	11200	1497
GW 50 601	100/1800	97200	1501
GW 50 602	100/1600	86400	1501
GW 50 603	100/900	54000	1501
GW 50 604	100/900	32400	1501
GW 50 605	100/900	54000	1501
GW 50 606	100/900	54000	1501
GW 50 607	100/600	36000	1501
GW 50 608	50/450	27000	1501
GW 50 609	50/350	18900	1501
GW 50 610	100/8000	0	1505
GW 50 611	100/8000	0	1505
GW 50 612	100/8000	0	1505
GW 50 613	100/6000	0	1505
GW 50 614	100/6000	0	1505
GW 50 615	100/6000	0	1505
GW 50 616	100/3000	0	1505
GW 50 617	100/1800	72000	1505
GW 50 618	100/2000	32000	1505
GW 50 619	50/900	36000	1505
GW 50 620	50/1000	14000	1505
GW 50 621	100/8000	0	1505
GW 50 622	100/8000	0	1505
GW 50 623	100/4000	0	1505
GW 50 624	100/15000	0	1505
GW 50 625	100/4800	0	1505
GW 50 626	100/1000	16000	1505
GW 50 627	100/1000	16000	1505
GW 50 628	50/450	27000	1501
GW 50 629	50/450	5400	1501
GW 50 630	35/350	7000	1501
GW 50 631	25/200	4000	1501
GW 50 641	100/600	9600	1501
GW 50 642	50/450	7200	1501
GW 50 643	50/300	4800	1501
GW 50 644	25/150	2400	1501
GW 50 645	30	720	1502
GW 50 651	50/500	24000	1502
GW 50 652	25/250	12000	1502
GW 50 653	15/150	7200	1502
GW 50 666	200/3600	86400	1504
GW 50 667	100/900	57600	1504
GW 50 671	100/900	14400	1503
GW 50 672	100/600	28800	1503
GW 50 673	100/600	28800	1503
GW 50 681	100/600	9600	1503
GW 50 682	50/450	7200	1503
GW 50 683	50/300	4800	1503
GW 50 691	100	6400	1505
GW 50 692	50	3200	1505
GW 50 706	100/1000	18000	1503
GW 50 707	100/1000	18000	1503
GW 50 708	100/1000	18000	1503
GW 50 709	50/500	9000	1503
GW 50 716	100/1200	21600	1503
GW 50 717	100/700	12600	1503
GW 50 718	50/350	6300	1503
GW 50 726	100/700	12600	1504
GW 50 727	50/350	6300	1504
GW 50 728	25/175	3150	1504
GW 50 776	100/900	14400	1504
GW 50 777	100/600	9600	1504
GW 50 778	50/450	7200	1504
GW 50 786	50/450	7200	1504
GW 50 787	50/300	4800	1504
GW 50 788	50	3200	1504
GW 50 791	1/10	600	1507
GW 50 792	10/100	1600	1507
GW 50 798	1/10	200	1507
GW 50 799	200/4000	0	1507
GW 50 801	100/1600	38400	1506
GW 50 802	100/800	26400	1506
GW 50 803	100/800	38400	1506
GW 50 804	100/800	28800	1506
GW 50 805	100/800	26400	1506
GW 50 806	100/600	12000	1506
GW 50 807	100/600	14400	1506
GW 50 808	100/600	14400	1506
GW 50 809	100/300	9000	1506
GW 50 810	50/300	7200	1506
GW 50 811	100/2400	43200	1506
GW 50 812	100/2000	36000	1506
GW 50 813	100/2000	48000	1506
GW 50 814	100/1600	38400	1506
GW 50 815	100/1000	40000	1506
GW 50 816	50/1000	18000	1506
GW 50 817	50/1000	24000	1506
GW 50 818	50/600	16200	1506
GW 50 819	50/600	7200	1506
GW 50 820	50/300	7200	1506
GW 50 821	100/2400	0	1506
GW 50 822	100/3500	63000	1506
GW 50 823	100/2000	48000	1506
GW 50 824	100/1600	43200	1506
GW 50 825	100/2000	36000	1506
GW 50 826	50/1000	24000	1506
GW 50 827	50/800	26400	1506
GW 50 828	50/600	7200	1506
GW 50 829	50/600	6000	1506
GW 50 830	50/300	7200	1506
GW 50 841	50/1000	18000	1506
GW 50 842	50/1000	18000	1506
GW 50 843	50/600	10800	1506
GW 50 844	50/500	9000	1506
GW 50 845	25/500	9000	1506
GW 50 846	25/250	4500	1506
GW52			
GW 52 001	50/900	81000	1494
GW 52 002	50/600	42000	1494
GW 52 003	25/500	27000	1494
GW 52 004	25/500	27000	1494
GW 52 005	25/375	18750	1494
GW 52 006	25/400	9600	1494
GW 52 007	25/250	5000	1494
GW 52 008	10/130	3900	1494
GW 52 009	6/120	1440	1494
GW 52 010	5/100	1200	1494
GW 52 024	15/300	7200	1495
GW 52 025	15/240	4320	1495
GW 52 026	15/240	3840	1495
GW 52 027	15/135	2160	1495
GW 52 028	6/54	972	1495
GW 52 029	4/80	480	1495
GW 52 042	50/600	25200	1494
GW 52 043	50/400	8800	1494
GW 52 044	25/300	18000	1494
GW 52 045	25/200	11200	1494
GW 52 046	25/150	6750	1494
GW 52 047	10/120	2400	1494
GW 52 048	6/84	2016	1494
GW 52 049	5/60	600	1494
GW 52 071	50/600	24000	1494
GW 52 072	50/400	38400	1494
GW 52 073	50/600	36000	1494
GW 52 074	25/300	18000	1494
GW 52 075	25/300	18000	1494

① September 2017 ② October 2017 ③ December 2017