# Product Data Sheet

# GW52009

Seria GW Connect



System akcesoriów instalacji elektrycznych do zastosowań w środowiskach mieszkalnych, usługowych i przemysłowych. W skład systemu wchodzą elementy złączne do rur i przewodów, osprzęt kablowy, akcesoria przeznaczone do rur sztywnych (seria RK) oraz przewodów elastycznych (seria DF). W skład systemu wchodzi również szeroka gama opasek kablowych (seria 52FS) oraz bloków zaciskowych (Seria 44).

| | | | |
|---|---|---|---|
| Kolor | Szary RAL 7035 | Ochrona IP | IP66 |
| Materiał | Nylon | Do kabli Ø (mm) | od 36 do 39/ od 40 do 43 |
| PG podziałka | 42 | Ø otworu montażowego (w mm) | 54 |
| Opis | Dławik kablowy | Rodzaj podziałki | PG42 |
| Próba rozżarzonym drutem | 650 °C | Temperatura robocza | -25 +65 °C |
| Electrocod | 36B | Norma | EN 50262 - IEC62444 - DIN 40430 |

## DIMENSIONAL

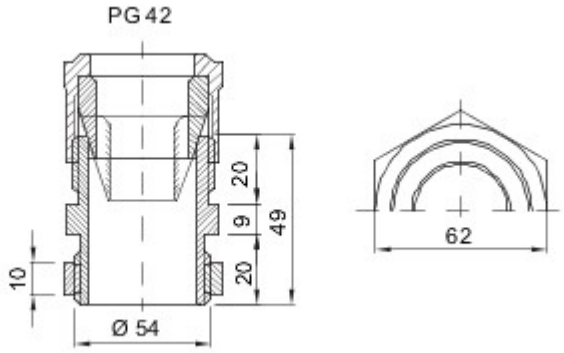


## TECHNICAL SYMBOLOGY

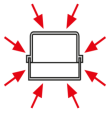
IP66


650 °C


-25 +65 °C

## STANDARDS/APPROVALS

CE

GEWISS S.p.A. Via A. Volta, 1
24069 Cenate Sotto - Bergamo - Italy
tel. +39 035 94 61 11 fax +39 035 94 69 09

www.gewiss.com
sat@gewiss.com
Last update 12/07/2018

Data, measures, designs and pictures are shown only as informativ purposes, and could be changed without previous notice

## DRILLING FOR BASICS POLYFUNCTIONAL SUPPORT

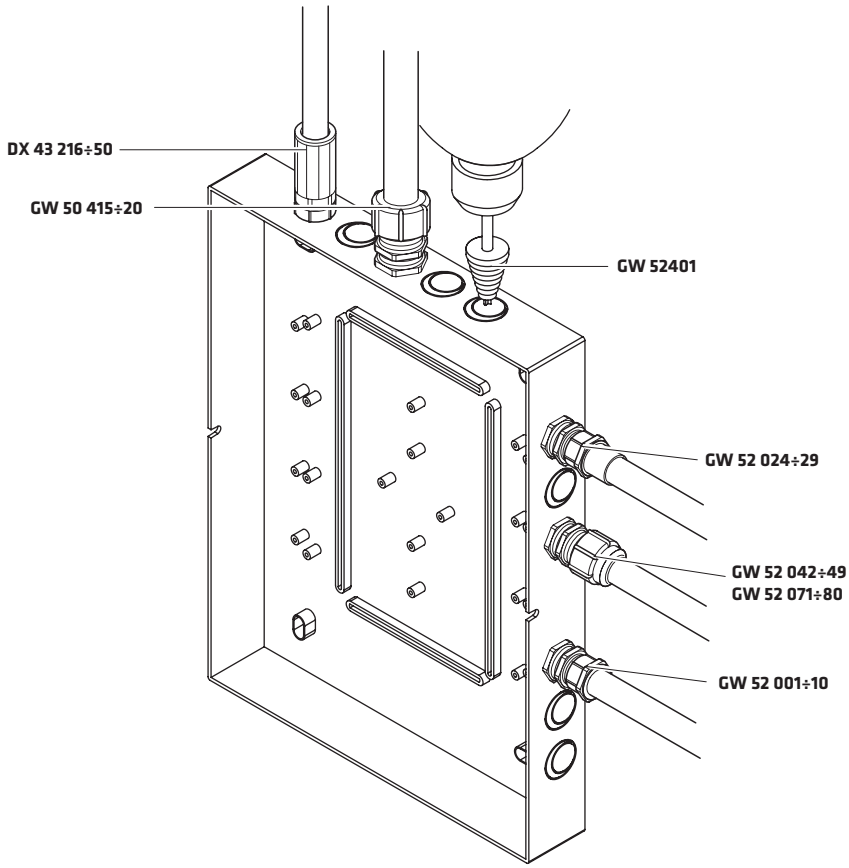

# GW FIT

| | PLASTIC CABLE GLANDS | | | | | | | | | METAL CABLE GLANDS | | | |
|---|---|---|---|---|---|---|---|---|---|---|---|---|---|
| | IP68  | | IP66  | | IP66 with housing  | | | IP54  | | IP68  | | IP 65  | |
| **Thread** | **Code** | **For cables Ø (mm)** | **Code** | **For cables Ø (mm)** | **Code** | **For conduits Ø (mm)** | **For cables Ø (mm)** | **Code** | **For cables Ø (mm)** | **Code** | **For cables Ø (mm)** | **Code** | **For cables Ø (mm)** |
| **PG7** | GW 52 071 | 3 ÷ 6,5 | GW 52 001 | 3 ÷ 6 | | | | GW 52 081 | 4 ÷ 6 | | | | |
| **PG9** | GW 52 072 | 4 ÷ 8 | GW 52 002 | 5 ÷ 8 | | | | GW 52 082 | 4,5 ÷ 7 | | | | |
| **PG11** | GW 52 073 | 5 ÷ 10 | GW 52 003 | 7 ÷ 10,5 | | | | GW 52 083 | 6 ÷ 9 | GW 76 825 | 4 ÷ 9 | GW 76 841 | 7,5/10/12,5 |
| **PG13,5** | GW 52 074 | 6 ÷ 12 | GW 52 004 | 9 ÷ 12,5 | GW 52 024 | 16 | 9 ÷ 12,5 | GW 52 084 | 9 ÷ 12 | GW 76 826 | 7 ÷ 11 | GW 76 842 | 7,5/10/12,5 |
| **PG16** | GW 52 075 | 10 ÷ 14 | GW 52 005 | 13 ÷ 16 | GW 52 025 | 20 | 13 ÷ 16 | GW 52 085 | 11 ÷ 14 | GW 76 827 | 10 ÷ 13 | GW 76 843 | 7,5/10/12,5 |
| **PG21** | GW 52 076 | 13 ÷ 18 | GW 52 006 | 9 ÷ 10<br>17 ÷ 20 | GW 52 026 | 25 | 9 ÷ 10<br>17 ÷ 20 | GW 52 086 | 14 ÷ 18 | GW 76 828 | 12 ÷ 17 | GW 76 844 | 10/13/16/19 |
| **PG29** | GW 52 077 | 18 ÷ 25 | GW 52 007 | 13,5 ÷ 15<br>21 ÷ 26 | GW 52 027 | 32 | 13,5 ÷ 15<br>21 ÷ 26 | GW 52 087 | 18 ÷ 25 | GW 76 829 | 17 ÷ 24 | GW 76 845 | 18/21/24/27 |
| **PG36** | GW 52 078 | 22 ÷ 32 | GW 52 008 | 17 ÷ 20<br>30 ÷ 34 | GW 52 028 | 40 | 17 ÷ 20<br>30 ÷ 34 | GW 52 088 | 26 ÷ 32 | GW 76 830 | 20 ÷ 26<br>27 ÷ 24 | GW 76 846 | 24/27/30/33 |
| **PG42** | GW 52 079 | 30 ÷ 38 | GW 52 009 | 36 ÷ 39<br>40 ÷ 43 | GW 52 029 | 50 | 36 ÷ 39<br>40 ÷ 43 | | | GW 76 897 | 32 ÷ 36 | GW 76 847 | 30/33/36/39 |
| **PG48** | GW 52 080 | 34 ÷ 44 | GW 52 010 | 38 ÷ 40<br>46 ÷ 50 | | | | | | | | | |
| **M12** | GW 52 042 | 3 ÷ 6,5 | | | | | | | | GW 76 894 | 3 ÷ 6,5 | | |
| **M16** | GW 52 043 | 5 ÷ 10 | | | | | | | | GW 76 896 | 4 ÷ 9 | | |
| **M20** | GW 52 044 | 10 ÷ 14 | | | | | | | | GW 76 831 | 10 ÷ 13 | GW 76 848 | 4/7/10/13 |
| **M25** | GW 52 045 | 13 ÷ 18 | | | | | | | | GW 76 832 | 12 ÷ 17 | GW 76 849 | 8,5/11,5/14,5/17,5 |
| **M32** | GW 52 046 | 18 ÷ 25 | | | | | | | | GW 76 833 | 14 ÷ 21 | GW 76 850 | 16/19/22/25 |
| **M40** | GW 52 047 | 22 ÷ 32 | | | | | | | | GW 76 834 | 19 ÷ 27 | GW 76 851 | 23/26/29/32 |
| **M50** | GW 52 048 | 30 ÷ 38 | | | | | | | | GW 76 835 | 25 ÷ 34 | GW 76 852 | 30/33/36/39 |
| **M63** | GW 52 049 | 35 ÷ 44 | | | | | | | | GW 76 895 | 34 ÷ 48 | | |

| | PLASTIC ACCESSORIES | | | METAL ACCESSORIES | | | | | | GASKETS |
|---|---|---|---|---|---|---|---|---|---|---|
| | Caps  | Nuts  | | Caps  | Nuts  | | Extensions  | | | O-ring for caps  |
| **Thread** | **Code** | **Code** | **Spanner (mm)** | **Code** | **Code** | **Spanner (mm)** | **Code** | **Male thread** | **Female thread** | **Code** |
| **PG7** | GW 52 361 | GW 52 341 | 19 | | | | | | | GW 52 441 |
| **PG9** | GW 52 362 | GW 52 342 | 22 | | | | | | | GW 52 442 |
| **PG11** | GW 52 363 | GW 52 343 | 24 | GW 76 980 | GW 76 957 | 21 | GW 76 865 | PG11 | PG13,5 | GW 52 443 |
| **PG13,5** | GW 52 364 | GW 52 344 | 27 | GW 76 981 | GW 76 958 | 23 | GW 76 866 | PG13,5 | PG16 | GW 52 444 |
| **PG16** | GW 52 365 | GW 52 345 | 30 | GW 76 982 | GW 76 959 | 26 | GW 76 867 | PG16 | PG21 | GW 52 445 |
| **PG21** | GW 52 366 | GW 52 346 | 36 | GW 76 983 | GW 76 960 | 32 | GW 76 868 | PG21 | PG29 | GW 52 446 |
| **PG29** | GW 52 367 | GW 52 347 | 46 | GW 76 984 | GW 76 961 | 41 | GW 76 869 | PG29 | PG36 | GW 52 447 |
| **PG36** | GW 52 368 | GW 52 348 | 60 | GW 76 985 | GW 76 962 | 51 | | | | GW 52 448 |
| **PG42** | GW 52 369 | GW 52 349 | 65 | GW 76 986 | GW 76 963 | 60 | | | | GW 52 449 |
| **PG48** | GW 52 370 | GW 52 350 | 70 | | | | | | | GW 52 450 |
| **M12** | GW 52 372 | GW 52 352 | 18 | GW 76 972 | GW 76 966 | 15 | | | | GW 52 452 |
| **M16** | GW 52 373 | GW 52 353 | 22 | GW 76 973 | GW 76 951 | 19 | | | | GW 52 453 |
| **M20** | GW 52 374 | GW 52 354 | 26 | GW 76 975 | GW 76 952 | 23 | GW 76 870 | M20 | M25 | GW 52 454 |
| **M25** | GW 52 375 | GW 52 355 | 32 | GW 76 976 | GW 76 953 | 29 | GW 76 871 | M25 | M32 | GW 52 455 |
| **M32** | GW 52 376 | GW 52 356 | 41 | GW 76 977 | GW 76 954 | 36 | GW 76 872 | M32 | M40 | GW 52 456 |
| **M40** | GW 52 377 | GW 52 357 | 50 | GW 76 978 | GW 76 955 | 45 | GW 76 873 | M40 | M50 | GW 52 457 |
| **M50** | GW 52 378 | GW 52 358 | 60 | GW 76 979 | GW 76 956 | 55 | | | | GW 52 458 |
| **M63** | GW 52 379 | GW 52 359 | 75 | GW 76 974 | GW 76 967 | 70 | | | | GW 52 459 |

# GW FIT

## Accessories for electrical installations

Complete system comprising cable glands, plastic and metal fixings, couplings for rigid conduits and sheaths, cable ties for external and junction and connection terminal blocks. The depth of the range and breadth of the offers of each family makes GEWISS the specialist and ideal partner when implementing any type of system, from residential to commercial and industrial sector.



***Technical characteristics page 1526***

## PLASTIC CABLE GLANDS AND ACCESSORIES

### CABLE GLANDS









GW 52 001

#### NYLON CABLE GLANDS - PG PITCH - GREY RAL 7035 - IP66

| Code | PG pitch | Mounting hole Ø (mm) | For cables Ø (mm) | Pack Carton |
|---|---|---|---|---|
| **GW 52 001** | 7 | 12.5 | from 3 to 6 | 50/900 |
| **GW 52 002** | 9 | 16 | from 6 to 8 | 50/600 |
| **GW 52 003** | 11 | 19 | from 8 to 10.5 | 25/500 |
| **GW 52 004** | 13.5 | 20 | from 9 to 12.5 | 25/500 |
| **GW 52 005** | 16 | 23 | from 13 to 16 | 25/375 |
| **GW 52 006** | 21 | 29 | from 9 to 10/from 17 to 20 | 25/400 |
| **GW 52 007** | 29 | 37 | from 13.5 to 15/from 21 to 26 | 25/250 |
| **GW 52 008** | 36 | 48 | from 17 to 20/from 30 to 34 | 10/130 |
| **GW 52 009** | 42 | 54 | from 36 to 39/from 40 to 43 | 6/120 |
| **GW 52 010** | 48 | 60 | from 38 to 40/from 46 to 50 | 5/100 |

**ACCESSORIES SUPPLIED:** fixing nut.
**APPLICATIONS:** for making watertight installations with direct grip on cable.



GW 52 075

#### NYLON CABLE GLANDS - PG PITCH - GREY RAL 7035 - IP68

| Code | PG pitch | Mounting hole Ø (mm) | For cables Ø (mm) | Pack Carton |
|---|---|---|---|---|
| **GW 52 071** | 7 | 12.5 | from 3.5 to 6.5 | 50/600 |
| **GW 52 072** | 9 | 16 | from 4 to 8 | 50/400 |
| **GW 52 073** | 11 | 19 | from 5 to 10 | 50/600 |
| **GW 52 074** | 13.5 | 20 | from 6 to 12 | 25/300 |
| **GW 52 075** | 16 | 23 | from 10 to 14 | 25/300 |
| **GW 52 076** | 21 | 29 | from 13 to 18 | 25/200 |
| **GW 52 077** | 29 | 37 | from 18 to 25 | 25/150 |
| **GW 52 078** | 36 | 48 | from 22 to 32 | 10/120 |
| **GW 52 079** | 42 | 54 | from 30 to 38 | 6/84 |
| **GW 52 080** | 48 | 60 | from 34 to 44 | 5/60 |

**ACCESSORIES SUPPLIED:** fixing nut.



GW 52 042

#### NYLON CABLE GLANDS - METRIC PITCH - GREY RAL 7035 - IP68

| Code | ISO pitch | Mounting hole Ø (mm) | For cables Ø (mm) | Pack Carton |
|---|---|---|---|---|
| **GW 52 042** | 12x1.25 | 12 | from 3 to 6.5 | 50/600 |
| **GW 52 043** | 16x1.5 | 16 | from 5 to 10 | 50/400 |
| **GW 52 044** | 20x1.5 | 20 | from 10 to 14 | 25/300 |
| **GW 52 045** | 25x1.5 | 25 | from 13 to 18 | 25/200 |
| **GW 52 046** | 32x1.5 | 32 | from 18 to 25 | 25/150 |
| **GW 52 047** | 40x1.5 | 40 | from 22 to 32 | 10/120 |
| **GW 52 048** | 50x1.5 | 50 | from 30 to 38 | 6/84 |
| **GW 52 049** | 63x1.5 | 63 | from 35 to 44 | 5/60 |

**ACCESSORIES SUPPLIED:** fixing nut.
**APPLICATIONS:** direct installation on fixing enclosures or components in feedthrough holes.
Coupling in installations where a high protection rating is required in the presence of chemical substances, shocks and vibrations.

# GW FIT



HIGH PERFORMANCE CABLE GLANDS



The selection of GEWISS cable glands provides plastic and metal versions with IP54, IP66 and IP68 degrees of protection, developed to suit any installation requirement in industrial applications and on the machine. Completing the offer, metal cable glands for ATEX environments.

AN EXTENSIVE CONDUIT AND CABLE FIXING SYSTEM



Available in plastic and metal and designed to meet every need: the range consists of snap-fit or collar conduit fixings accessories, also in multidiameter version and with a built-in wall plug version for faster installation.

TIES AND TERMINAL BLOCKS FOR EFFECTIVE WIRING



Range of ties which includes 6 different product lines: from the PA66 wiring versions to the L.T.R. versions for external applications in PA12. Range of terminal blocks in various types: movable terminal blocks, multi-pole, modular distribution and equipotential single-pole for DIN rails.

## CABLE GLANDS

### Cable glands and plastic accessories

| TECHNICAL CHARACTERISTICS | |
|---|---|
| Regulatory Compliance: | Insulation resistance: >100MΩ a 500 V |
| Cable Glands: EN 50262; IEC 62444 | Protection degree: IP44; IP55; IP66; IP68 |
| Metric pitch: IEC/EN 60243 | Rated voltage: 2000 V a 50 Hz |
| PG pitch: DIN 40430 | Glow Wire Test: 650 °C cable glands |
| Couplings and cable glands: EN 61386-1 e EN 60670-1 as applicable | 750 °C couplings and grommets |
| Temperature of installation: Min -25°C Max +65°C (cable glands and coupling conduit/box IP66) | |
| Min -5°C Max +60°C (grommets and coupling conduit/box IP55) | |

| BEHAVIOUR WITH CHEMICAL AND ATMOSPHERIC AGENTS | | | | | | | | | | | | |
|---|---|---|---|---|---|---|---|---|---|---|---|---|
| Agent | Saline solution | Acids | | Bases | | Solvents | | | | Mineral oil | UV rays |
| | | Concentrated | Diluted | Concentrated | Diluted | Hexane | Benzol | Acetone | Ethyl alcohol | | |
| Cable glands | Resistant | Limited resistance | Limited resistance | Resistant | Resistant | Resistant | Resistant | Resistant | Resistant | Resistant | Limited resistance |
| Couplings and cable glands | Resistant | Limited resistance | Limited resistance | Resistant | Resistant | Resistant | Resistant | Resistant | Resistant | Resistant | Limited resistance |

### Dimension tables

**PG PITCH CABLE GLANDS - IP66**

Cable glands

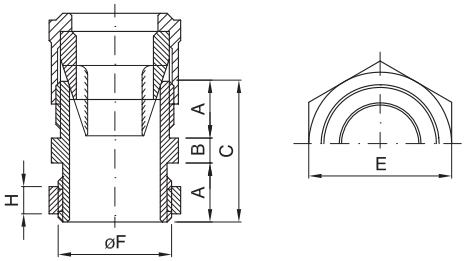


| Code | PG pitch | A | B | C | E | H | øF |
|---|---|---|---|---|---|---|---|
| GW 52 001 | 7 | 8 | 3 | 19 | 16 | 3.5 | 12.5 |
| GW 52 002 | 9 | 9 | 3.5 | 21.5 | 19 | 4 | 15.2 |
| GW 52 003 | 11 | 10.5 | 4 | 25 | 22 | 5 | 18.6 |
| GW 52 004 | 13.5 | 12 | 4.5 | 28.5 | 24 | 5.5 | 20.4 |
| GW 52 005 | 16 | 13 | 5 | 31 | 27 | 6 | 22.5 |
| GW 52 006 | 21 | 14 | 6 | 34 | 32 | 6.5 | 28.3 |
| GW 52 007 | 29 | 15 | 8 | 38 | 41 | 8 | 37 |
| GW 52 008 | 36 | 18 | 9 | 45 | 55 | 9 | 47 |
| GW 52 009 | 42 | 20 | 9 | 49 | 62 | 10 | 54 |
| GW 52 010 | 48 | 22 | 9 | 53 | 66 | 14.5 | 59.3 |

| Code | Quantity | | Page |
|---|---|---|---|
| | Pack/carton | Pallet | |
| GW 49 999 | 1 | 38 | 930 |
| **GW50** | | | |
| GW 50 201 | 20/60 | 2400 | 1430 |
| GW 50 201 | 20/60 | 2400 | 1511 |
| GW 50 202 | 20/120 | 4560 | 1430 |
| GW 50 202 | 20/120 | 4560 | 1511 |
| GW 50 203 | 10/40 | 720 | 1430 |
| GW 50 203 | 10/40 | 720 | 1511 |
| GW 50 204 | 10/60 | 960 | 1430 |
| GW 50 204 | 10/60 | 960 | 1511 |
| GW 50 205 | 6/30 | 180 | 1430 |
| GW 50 205 | 6/30 | 180 | 1511 |
| GW 50 206 | 6/36 | 432 | 1430 |
| GW 50 206 | 6/36 | 432 | 1511 |
| GW 50 207 | 20/60 | 6000 | 1430 |
| GW 50 207 | 20/60 | 6000 | 1511 |
| GW 50 208 | 20/120 | 6000 | 1430 |
| GW 50 208 | 20/120 | 6000 | 1511 |
| GW 50 209 | 20/120 | 2880 | 1430 |
| GW 50 209 | 20/120 | 2880 | 1511 |
| GW 50 210 | 10/20 | 1280 | 1430 |
| GW 50 210 | 10/20 | 1280 | 1511 |
| GW 50 211 | 6/30 | 540 | 1430 |
| GW 50 211 | 6/30 | 540 | 1511 |
| GW 50 212 | 6/36 | 432 | 1430 |
| GW 50 212 | 6/36 | 432 | 1511 |
| GW 50 415 | 25/200 | 8000 | 1454 |
| GW 50 415 | 25/200 | 8000 | 1497 |
| GW 50 416 | 25/200 | 14400 | 1454 |
| GW 50 416 | 25/200 | 14400 | 1497 |
| GW 50 417 | 25/150 | 7500 | 1454 |
| GW 50 417 | 25/150 | 7500 | 1497 |
| GW 50 418 | 10/100 | 1800 | 1454 |
| GW 50 418 | 10/100 | 1800 | 1497 |
| GW 50 419 | 6/60 | 1080 | 1454 |
| GW 50 419 | 6/60 | 1080 | 1497 |
| GW 50 420 | 5/50 | 900 | 1454 |
| GW 50 420 | 5/50 | 900 | 1497 |
| GW 50 421 | 50/700 | 12600 | 1497 |
| GW 50 422 | 50/700 | 12600 | 1497 |
| GW 50 423 | 25/350 | 6300 | 1497 |
| GW 50 424 | 25/350 | 6300 | 1497 |
| GW 50 425 | 15/210 | 2100 | 1497 |
| GW 50 426 | 10/160 | 2560 | 1497 |
| GW 50 427 | 10/90 | 1440 | 1497 |
| GW 50 428 | 100/1000 | 0 | 1313 |
| GW 50 428 | 100/1000 | 0 | 1497 |
| GW 50 429 | 100/1000 | 50000 | 1313 |
| GW 50 429 | 100/1000 | 50000 | 1497 |
| GW 50 430 | 100/1000 | 30000 | 1313 |
| GW 50 430 | 100/1000 | 30000 | 1497 |
| GW 50 431 | 50/500 | 21000 | 1313 |
| GW 50 431 | 50/500 | 21000 | 1497 |
| GW 50 432 | 35/350 | 11200 | 1313 |
| GW 50 432 | 35/350 | 11200 | 1497 |
| GW 50 601 | 100/1800 | 97200 | 1501 |
| GW 50 602 | 100/1600 | 86400 | 1501 |
| GW 50 603 | 100/900 | 54000 | 1501 |
| GW 50 604 | 100/900 | 32400 | 1501 |
| GW 50 605 | 100/900 | 54000 | 1501 |
| GW 50 606 | 100/900 | 54000 | 1501 |
| GW 50 607 | 100/600 | 36000 | 1501 |
| GW 50 608 | 50/450 | 27000 | 1501 |
| GW 50 609 | 50/350 | 18900 | 1501 |
| GW 50 610 | 100/8000 | 0 | 1505 |
| GW 50 611 | 100/8000 | 0 | 1505 |
| GW 50 612 | 100/8000 | 0 | 1505 |
| GW 50 613 | 100/6000 | 0 | 1505 |
| GW 50 614 | 100/6000 | 0 | 1505 |
| GW 50 615 | 100/6000 | 0 | 1505 |
| GW 50 616 | 100/3000 | 0 | 1505 |
| GW 50 617 | 100/1800 | 72000 | 1505 |
| GW 50 618 | 100/2000 | 32000 | 1505 |
| GW 50 619 | 50/900 | 36000 | 1505 |
| GW 50 620 | 50/1000 | 14000 | 1505 |
| GW 50 621 | 100/8000 | 0 | 1505 |
| GW 50 622 | 100/8000 | 0 | 1505 |
| GW 50 623 | 100/4000 | 0 | 1505 |
| GW 50 624 | 100/15000 | 0 | 1505 |
| GW 50 625 | 100/4800 | 0 | 1505 |
| GW 50 626 | 100/1000 | 16000 | 1505 |
| GW 50 627 | 100/1000 | 16000 | 1505 |
| GW 50 628 | 50/450 | 27000 | 1501 |
| GW 50 629 | 50/450 | 5400 | 1501 |
| GW 50 630 | 35/350 | 7000 | 1501 |
| GW 50 631 | 25/200 | 4000 | 1501 |
| GW 50 641 | 100/600 | 9600 | 1501 |
| GW 50 642 | 50/450 | 7200 | 1501 |
| GW 50 643 | 50/300 | 4800 | 1501 |
| GW 50 644 | 25/150 | 2400 | 1501 |
| GW 50 645 | 30 | 720 | 1502 |
| GW 50 651 | 50/500 | 24000 | 1502 |
| GW 50 652 | 25/250 | 12000 | 1502 |
| GW 50 653 | 15/150 | 7200 | 1502 |
| GW 50 666 | 200/3600 | 86400 | 1504 |
| GW 50 667 | 100/900 | 57600 | 1504 |
| GW 50 671 | 100/900 | 14400 | 1503 |
| GW 50 672 | 100/600 | 28800 | 1503 |
| GW 50 673 | 100/600 | 28800 | 1503 |
| GW 50 681 | 100/600 | 9600 | 1503 |
| GW 50 682 | 50/450 | 7200 | 1503 |
| GW 50 683 | 50/300 | 4800 | 1503 |
| GW 50 691 | 100 | 6400 | 1505 |
| GW 50 692 | 50 | 3200 | 1505 |
| GW 50 706 | 100/1000 | 18000 | 1503 |
| GW 50 707 | 100/1000 | 18000 | 1503 |
| GW 50 708 | 100/1000 | 18000 | 1503 |
| GW 50 709 | 50/500 | 9000 | 1503 |
| GW 50 716 | 100/1200 | 21600 | 1503 |
| GW 50 717 | 100/700 | 12600 | 1503 |
| GW 50 718 | 50/350 | 6300 | 1503 |
| GW 50 726 | 100/700 | 12600 | 1504 |
| GW 50 727 | 50/350 | 6300 | 1504 |
| GW 50 728 | 25/175 | 3150 | 1504 |
| GW 50 776 | 100/900 | 14400 | 1504 |
| GW 50 777 | 100/600 | 9600 | 1504 |
| GW 50 778 | 50/450 | 7200 | 1504 |
| GW 50 786 | 50/450 | 7200 | 1504 |
| GW 50 787 | 50/300 | 4800 | 1504 |
| GW 50 788 | 50 | 3200 | 1504 |
| GW 50 791 | 1/10 | 600 | 1507 |
| GW 50 792 | 10/100 | 1600 | 1507 |
| GW 50 798 | 1/10 | 200 | 1507 |
| GW 50 799 | 200/4000 | 0 | 1507 |
| GW 50 801 | 100/1600 | 38400 | 1506 |
| GW 50 802 | 100/800 | 26400 | 1506 |
| GW 50 803 | 100/800 | 38400 | 1506 |
| GW 50 804 | 100/800 | 28800 | 1506 |
| GW 50 805 | 100/800 | 26400 | 1506 |
| GW 50 806 | 100/600 | 12000 | 1506 |
| GW 50 807 | 100/600 | 14400 | 1506 |
| GW 50 808 | 100/600 | 14400 | 1506 |
| GW 50 809 | 100/300 | 9000 | 1506 |
| GW 50 810 | 50/300 | 7200 | 1506 |
| GW 50 811 | 100/2400 | 43200 | 1506 |
| GW 50 812 | 100/2000 | 36000 | 1506 |
| GW 50 813 | 100/2000 | 48000 | 1506 |
| GW 50 814 | 100/1600 | 38400 | 1506 |
| GW 50 815 | 100/1000 | 40000 | 1506 |
| GW 50 816 | 50/1000 | 18000 | 1506 |
| GW 50 817 | 50/1000 | 24000 | 1506 |
| GW 50 818 | 50/600 | 16200 | 1506 |
| GW 50 819 | 50/600 | 7200 | 1506 |
| GW 50 820 | 50/300 | 7200 | 1506 |
| GW 50 821 | 100/2400 | 0 | 1506 |
| GW 50 822 | 100/3500 | 63000 | 1506 |
| GW 50 823 | 100/2000 | 48000 | 1506 |
| GW 50 824 | 100/1600 | 43200 | 1506 |
| GW 50 825 | 100/2000 | 36000 | 1506 |
| GW 50 826 | 50/1000 | 24000 | 1506 |
| GW 50 827 | 50/800 | 26400 | 1506 |
| GW 50 828 | 50/600 | 7200 | 1506 |
| GW 50 829 | 50/600 | 6000 | 1506 |
| GW 50 830 | 50/300 | 7200 | 1506 |
| GW 50 841 | 50/1000 | 18000 | 1506 |
| GW 50 842 | 50/1000 | 18000 | 1506 |
| GW 50 843 | 50/600 | 10800 | 1506 |
| GW 50 844 | 50/500 | 9000 | 1506 |
| GW 50 845 | 25/500 | 9000 | 1506 |
| GW 50 846 | 25/250 | 4500 | 1506 |
| **GW52** | | | |
| GW 52 001 | 50/900 | 81000 | 1494 |
| GW 52 002 | 50/600 | 42000 | 1494 |
| GW 52 003 | 25/500 | 27000 | 1494 |
| GW 52 004 | 25/500 | 27000 | 1494 |
| GW 52 005 | 25/375 | 18750 | 1494 |
| GW 52 006 | 25/400 | 9600 | 1494 |
| GW 52 007 | 25/250 | 5000 | 1494 |
| GW 52 008 | 10/130 | 3900 | 1494 |
| GW 52 009 | 6/120 | 1440 | 1494 |
| GW 52 010 | 5/100 | 1200 | 1494 |
| GW 52 024 | 15/300 | 7200 | 1495 |
| GW 52 025 | 15/240 | 4320 | 1495 |
| GW 52 026 | 15/240 | 3840 | 1495 |
| GW 52 027 | 15/135 | 2160 | 1495 |
| GW 52 028 | 6/54 | 972 | 1495 |
| GW 52 029 | 4/80 | 480 | 1495 |
| GW 52 042 | 50/600 | 25200 | 1494 |
| GW 52 043 | 50/400 | 8800 | 1494 |
| GW 52 044 | 25/300 | 18000 | 1494 |
| GW 52 045 | 25/200 | 11200 | 1494 |
| GW 52 046 | 25/150 | 6750 | 1494 |
| GW 52 047 | 10/120 | 2400 | 1494 |
| GW 52 048 | 6/84 | 2016 | 1494 |
| GW 52 049 | 5/60 | 600 | 1494 |
| GW 52 071 | 50/600 | 24000 | 1494 |
| GW 52 072 | 50/400 | 38400 | 1494 |
| GW 52 073 | 50/600 | 36000 | 1494 |
| GW 52 074 | 25/300 | 18000 | 1494 |
| GW 52 075 | 25/300 | 18000 | 1494 |

① September 2017 ② October 2017 ③ December 2017